AMATEUR RADIO 1976

The BEST Year Yet For Amateur Radio?

73 MAGAZINE
JANUARY 1976
$1.50

NEW Bicentennial Callsigns!

See page 193

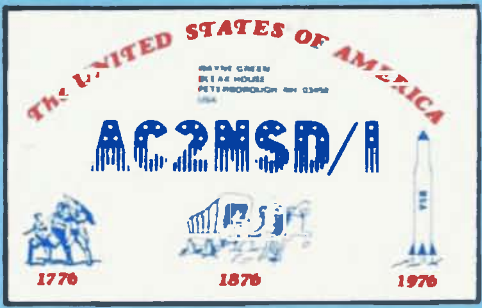

NEW FCC Regs Coming!

Restructuring or De-structuring?
Communicator Class Nears!

See page 32

NEW Magazine Formats!

Special 73 conversion project for your bookcase

See page 3

IN THIS ISSUE —

Giant Heath and Hickok Catalogs!

Plus COUNTLESS Interesting Articles


5


28

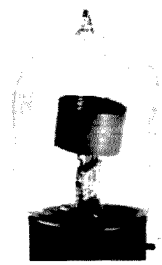
202


230

73 amateur radio

#183 JAN 1976

73 Magazine is published monthly by 73, Inc., Peterborough NH 03458. Subscription rates are $10 for one year, $17 for two years, and $20 for three years. Second class postage paid at Peterborough NH 03458 and at additional mailing offices. Phone: 603-924-3873. Microfilm edition of 73 available from University Microfilms, Ann Arbor MI 48106. Magnetic tapes available from Science for the Blind, 332 Rock Hill Rd., Bala Cynwyd PA 19904.

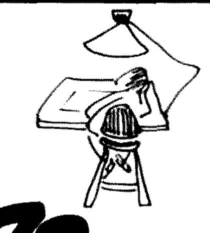

73 staff

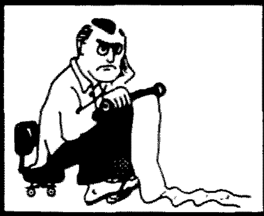

NEVER SAY DIE

...de W2NSD/1

EDITORIAL BY WAYNE GREEN

THE BIGGER ISSUE

Well, here it is, your first giant sized issue of a ham magazine. You might as well be enthusiastic about it because this is the way it is going to be. To help you convert over we have the bookcase conversion project on the next page . . . thanks to Marsha Kay Gilger for the drawing.

Readers want to know why the large format. A reasonable question.

It all started when *QST* announced that starting with January they were going to go to the large size magazine, citing paper savings as a reason. I cited that as patent nonsense since more paper does not yet cost less, but I have the feeling that no one was paying much attention to me. I get that feeling a lot.

With just one magazine in the new size we might have held the fort, particularly since we tried as hard as we could to think up advantages to the readers in the new size and could come up with nothing. Then *CQ* and *HR* announced they were going large format. Oh, oh . . . this meant that many ads would be made up in the large size. It costs a lot to make up ads and few would be made in two sizes, which left no choice but to be dragged kicking and screaming into the large format.

It will not be news to readers that those advertisers are paying for your magazine . . . the ads pay the printing and paper bill as well as the generous payments to authors for articles. Subscription income pays for keeping records and mailing the issues and not much else. Of course without a lot of subscribers you don't get ads.

Once we decided to go big we figured what the heck, why not do it first? So here we are. Of course we had to cram all the November and December articles in one issue to get 1975 out of the way last month. Even though the last issue was double sized and had two months listed on the cover, it will still only count as one toward subscriptions. Merry Christmas.

NAME CHANGE

Got a letter from WB4SLO, Ñenad S. Downing (note the NSD there), claiming to be a *CQ* fan (I knew he was pulling me leg right there) and to be irritated by Wayne Green (you have to be dead from the neck up if I don't get to you). Then he goes on to praise the magazine outrageously . . . the articles and even the beneficence of ads. I can read letters like that all day. But that Nenad S. Downing began to percolate through . . . hmm . . . now, with a small change to Nayne, the middle initial is there already, stands for Sanger . . . I haven't used it much because my father goes by that name . . . and you can see how things perk up through . . . to Nayne S. Dreen. Heh.

The Candy Company seems to be getting closer and closer to making it possible for me to achieve the goal of many years . . . W1NSD. I'm so used to using W2NSD portable that I have an awful time just saying W2NSD when I operate from the Brooklyn shack. When I moved to New Ham Shire thirteen years ago, Candy suggested I hold tight, that rule changes would be along so I could get W1NSD and not have to settle for WA1EJU. Things move slowly in Washington, but one of these days . . . one of these days. . . Then all I'll have to do is wait for Candy to process the application . . . will I live that long? In the meanwhile I'll have to mull over that Nayne S. Dreen bit.

OTTAWA

The Radio Society of Ontario pulled off a first rate hamfest in October, with almost 900 registered in attendance and a nice bunch of exhibits, prizes and talks. The dinner was fantastic . . . 636 banqueted in one enormous room . . . and the food was excellent, quite a surprise to any regular banquet eater . . . roast beef, shrimp, black forest cake, the works. Congratulations are due to the group of hard workers that made it possible.

ARRL ELECTION

One of the California club newsletters had a good deal of info on a contest for Director between Doc Gmelin and Bill Eitel. I hated to see amateurs faced with a choice there as both are fine men . . . Doc has been at the ARRL Director biz for years and knows his way around . . . he is a tremendously likeable bouncy guy with a fantastic sense of humor and a bright inquiring mind.

Bill Eitel, recently retired from Eimac, by far our foremost manufacturer of power tubes for hams, has something that is extremely valuable for the League . . . industry background and knowhow. Bill knows everyone and is liked by everyone . . . he's been an enthusiastic League supporter for what seems like 50 years . . . he's been in the background of many of the better things that the League has done, such as the election of Herbert Hoover, Jr., as President of the League, a feather in the cap for amateur radio.

The ARRL bylaw which prohibits active ham industry people from being considered for elective positions has kept out some very fine men in the past . . . men with a deep interest in promoting amateur radio, not just their products . . . men like Herb Johnson of Atlas (the chap who started Swan!), Andy Andrews of Hy-Gain, etc. Bill Eitel would have made a very valuable Director years ago if the bylaws had permitted it and the League could only have gained from the association.

In this case, whichever way the election goes the ARRL will do well, so it is indeed painful to know that also, whichever way it goes, the ARRL will *lose* a good man.

TOY OR TOOL?

Topic number one, the "restructuring" of amateur radio, has generated a lot of heat . . . not an awful lot of light. Perhaps we can better consider the many possibilities if we go back to basics and start from there rather than trying to fathom the impact of new license classes on our own operations.

There are some fairly well defined guidelines as to the purposes of amateur radio . . . these are set out in not too clear form in 97.1 of the regulations. The rules state that amateur radio is to provide emergency communications, advance the communications art, provide a source of technically skilled people and provide international good will.

While it's true that older folk who get into amateur radio can help with the emergencies and good will, we would be less than honest if we didn't admit that the pool of technically trained people and advancement of the art doesn't refer largely to getting youngsters into amateur radio, not old timers. Thus it would seem to me that there is some logic to having our rules favor attracting young blood.

The proposed Communicator license was the major reason for the whole restructuring bit, so let's just mull over what we might or might not be able to accomplish with such a ticket. As I get the scene, the Communicator license is supposed to be a sort of half way bridge to get CBers into amateur radio. There appear to

be two main reasons for wanting CBers in amateur radio . . . hams feel a need for the hobby to grow and just don't know where else to turn for blood . . . and industry sees billions of dollars of sales if CBers can be encouraged to move to a new band or two. I'm afraid that the latter is more the moving excuse for what has happened so far.

Which brings me to a rather basic question . . . will we find in CBers this large group of teenagers that are what we need for amateur radio? My experiences on CB are certainly not encouraging in this direction.

The records show that roughly half of the newly licensed amateurs are either 15 or 16 years old, too young to get CB licenses. It looks to me as if we're planning on fishing in the wrong lake for the trout we want. I think that the ham clubs are on the right track . . . they're out there beating the bushes in the high schools for prospective hams, not flagging down truckers.

If we're out to find matured voices to fill up our empty repeaters, then Communicatorizing CBers is a good answer. If we want to really get growth . . . to bring some real money into ham manufacturing instead of keeping it almost as a hobby as it is today . . . the CBers are the way to go. Who knows, the ham manufacturers might get powerful enough to get a voice in the EIA and then we might be able to throw off the FCC entirely as the CBers have.

Amateur radio has a long history of inventing and pioneering and I think we all want to keep this alive . . . all we have to do is be sure of how to do it and make our voice heard above the tinkle of the coins in the till. I think that the ham clubs with good working license classes are going in the right direction . . . and I'm not convinced that a rubber stamp ham ticket is right, even though it could mean billions of dollars to industry.

CB IN PERSPECTIVE

Putting down CB is in many cases more an indication of insecurity on our part than anything else. CB has changed a lot in the last couple of years. The sunspots have died down and there is little DXing these days . . . a factor which has taken the steam out of super high power stations. The laws against amplifiers are beginning to be felt too . . . they are quite difficult to get in many areas.

With the enormous influx of trucks on the CB channels and the reduction in DXing, things have calmed down a lot. Bad language is the exception in most areas . . . it's a lot different talking to someone a thousand miles away and a neighbor.

It is time to give CB its due . . . amateur radio can't come close to CB as far as keeping track of traffic conditions. If you want to be able to avoid tieups you will be listening to channel 19, not your local repeater. If you come across an accident and want to call the police you may be able to do it through the repeater . . . but chances are you'll get excellent service on CB via a nearby base station. The CBer has the advantage of being nearby, not 25 miles away in another town, like the repeater. Argue with me, if you like, but if we really want to help in emergencies we need both amateur radio and CB in our cars, then we can pick the best one for the problem at hand.

Perhaps it is time to accept CB for what it is today, a relatively effective communications medium for anyone with a hundred dollars to spare. Considering that it is just about totally without rule enforcement, it is doing amazingly well. I wouldn't be without a pair of ears on channel 19 on any long trip myself.

COMMISSIONER LEE SPEAKS

Thanks KØBIY for the newspaper clipping quoting FCC Commissioner Lee as saying that he thought the best solution to the CB problem was no regulation at all . . . "I lean towards saying, 'Let's forget them.' " Lee pointed out that the actual enforcement of the regulations is miniscule. "About half a dozen" violators of CB regulations have been fined in the last year. "They're hard to catch, and when we catch them the Department of Justice doesn't want to prosecute."

ASPEN?

Hey . . . do you like to ski? How'd you like to get together with a bunch of us in January for some skiing . . . some fantastic meals . . . and a whole lot of ham talk?

About ten years ago I got conned into learning to ski. That turned out to be one of the better things that has happened to me in this lifetime . . . I've enjoyed skiing much more than I could ever tell you. After a few weeks of thrashing about on one of the local mountains, Kayla Bloom WØHJL, of Denver, talked me into stopping off in Colorado for a week at Aspen. In addition to getting to know Kayla and as a result signing her on to be editor of *73*, I found three things which just about blew my mind . . . the skiing at Aspen, the ski instruction at Aspen, and the amazing restaurants.

I arrived there an utter novice skier. Within one week they had me plunging down their most expert trails and ready to fearlessly tackle just about anything. They seem to have somehow managed to corner the world market on expert ski instructors. Since that time I've been out there twice more and both times my skiing improved tremendously.

With four big mountains to ski, they have something for everyone. I've skied most of the trails, but my preference is Buttermilk and Tiehack mountains. It seems to snow a few inches every night, resulting in beautiful powder for the early risers.

Restaurants. I think there are more superb restaurants in Aspen than any other single town I've visited . . . including New York. For instance, there may be one or two Mexican restaurants in San Antonio to rival Aspen, but not in New York.

On many weekends last winter groups of skiing hams would attack the mountains of New Hampshire, HTs at the ready. It's a lot of fun mixing the two interests. We would keep in touch with each other as we went up and down the lifts and slopes, usually on 52 direct. When some of the fellows went to other ski areas we would work them through a repeater and keep in touch.

It looks as if at least five or six of us from the Boston area will be flying out to Aspen, HTs in hand, for a week of skiing . . . January 3-10th. We'll be having a great time. Some are good skiers, some are just beginners. Steve Murray K1KEC, one of the New England repeater coordinators, just got on skis last winter for the first time . . . he'll be there. Chuck Martin WA1KPS, the chap who runs Tufts Radio, the largest ham dealer in New England, will be there. Chuck had done quite a bit of cross country skiing, but just got started on downhill last season . . . and he's a terror already. Two nicer guys you'll never meet.

Chuck threatened to bring a repeater, but Aspen is so small that it wouldn't be of any real use. We'll do fine with 52 direct there.

If you'd like to come along and join the fun . . . ski with us . . . get around

Continued on page 32

be my guest

visiting views from around the world

Son of a Gun! The Noble Breed!

It was raining last week and in seeking shelter we ran across one of the local QRPers. There was that lost expression on his face. "I am worried," he said. "I know that Glorioso is coming up and I need that one and Juan de Nova is on right now and I need that one. I worry about them every night and I am losing sleep over them. It is really a problem. A real problem."

We thought about this for a moment and took a chance at the reassurance angle. "You will work them," we promised the QRPer. "Sooner or later you will work them. That's for sure!"

The QRPer did think about this for a bit but was right back. "But when?" he asked. "When will I work them? And after I work them, what about those new countries that are sure to come? How do I know I will be able to catch them? How can I keep from worrying about those ones? You must see the problems I have, don't you?"

Son of a Gun!! What could we say? For there is a joy in anxiety and solace in worry. And for some there will never be a happy day without its worry. For when you have worked everything, what will there be to look forward to?

* * * * *

We were doing some road work over the ridges last week, getting set for the CQ WW DX Test. And we ran into one of the locals who has toiled these many years on various things such as traffic nets, rag chew nets, state-of-the-art things and stuff like that. "How's DX?" this one asked politely, and we had to admit that it was thriving. "What are you working these days?" he asked, and we had to admit that we were working the world every morning and evening. "Anything new?" he persisted, and we had to admit that after working everything we were now working everything backwards and with our left foot as an added challenge.

The Ordinary One thought about this for awhile and finally came back with a bit more. "You know something?" he said. "A few years back I went to the Pacific Division meeting and one of the fellows there said that DXers were the top of the amateur crop . . . and that they knew it. I really think that he was right. I really do."

Son of a Gun, what could one say to something like that – though one must expect such things. When you are Number One . . . when you stand like an unattainable model to those other types, one must realize that DXers are unique. So all we could say was, "Heck, I always thought that everyone knew that already."

DXers are the Noble Breed!! Would any true-blue one admit otherwise?

Reprinted from the West Coast DX Bulletin.

A Good Deal for Dummies

Early one morning I was watching the tube. They had a program on telling about communities who got Federal money and some good action by banding together and legislating what they needed.

I got to wondering if we hams couldn't do something like that. No big national organization was telling these communities what they needed. The ideas came from the people who were going to be affected by the changes.

The program told about a beautiful wooded area which was just sitting there. It was owned in the main by people outside the area. Somebody got the idea that, since the town was growing a bit, the woods would make a nice park. Soon other people became interested. They got together and made a plan. Then they talked to the land owners and got their consent. Next they got the plan approved by the community government. And, what do you know? They got the park plus some Federal money to spend for roads, picnic tables, swings and things.

Okay, we hams have a natural resource sitting there. It's owned by everybody. We would like to park there now and then. We find it a nice place to come and visit. Maybe it's 80 meter CW, 160 phone or 2 meter teletype, or maybe even 440 fast scan TV.

A long time ago someone got the idea that these are really fine natural resources, and, fortunately, some of the good spots got reserved for those who took the trouble to equip themselves to use them.

Now and again hoodlums come along and garbage up those beautiful spots, but nature has a forgiving way about her, and the spots are clean again for the next batch of humans.

Here is where we ought to shake ourselves out of our lethargy. Right now, instead of being lucky people, we hams are getting the business. Instead of getting Federal money to beautify our part of the natural resource, our leaders are about to call in the Feds to cram us into smaller segments, compartmentalize us, and dump garbage all over us. And many of us dummies think we're getting a good deal.

Paul L. Schmidt W9IDP
PO Box 105
Bloomfield IN 47424

MORE on next page

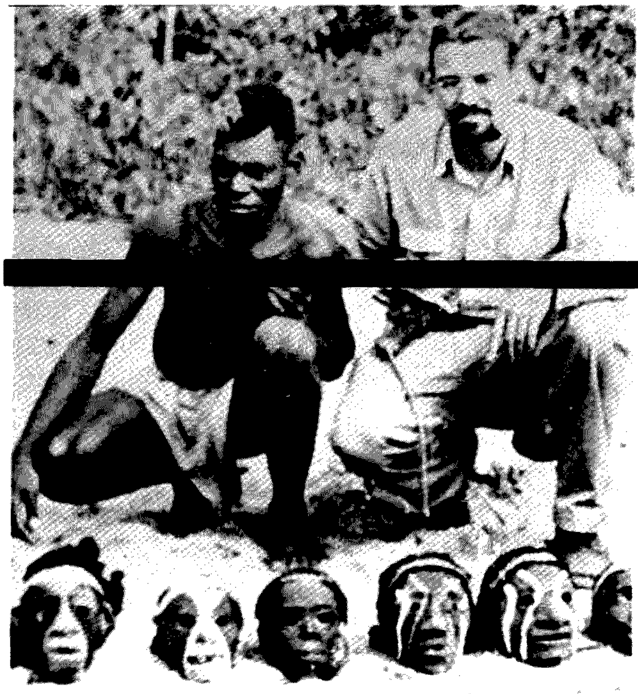

Called to (Varl)arms

Mementos of Solomon Islands days.

In 1940, Henry Rice W9YZH, in St. Louis, designed a variable frequency oscillator, which James Millen Co. put on the market commercially as the Variarm. During WW II, an enlistee named Harry Turner W9YZE, from the same metropolitan area, loaded up a Variarm and went to serve Uncle Sam in the Solomon Islands.

Harry was — is — a telegrapher of note, and presently got his go at winning the war with his skills.

It seems Harry and his gang occupied one end of an island while the Japanese camped at the other end. Somewhere in the vicinity lived an assortment of headhunters and a missionary.

The Japanese gave trouble by night, wherefore Harry's gang felt constrained to call in the bombers for a little softening action. The process involved getting on the radio and calling for help. The Japanese, being largely educated at UCLA, as the saying goes, weren't ignorant of our communications, and, hearing same, would immediately join in the transmission with spurious signals of their own ("jamming").

That's where the Variarm and Harry's "fist" came in. He'd attach an antenna directly to the output of the Variarm and start pounding his key. He could put on a good show, too: He'd been clocked in training at 35 wpm on a straight key. The Japs, sure they'd found the hot line, began their jamming, and Harry started pulling down that Variarm to change the frequency gradually. The Japanese credulously followed the drifting, seemingly unstable rig to the limits of its variable arm's play. At that point, Harry would punch the operator next to him, who would use the original frequency to call for help. Wonder just what the Japanese thought next day when they were on the receiving end of U.S. bombs?

To regress just a moment, going back to Harry's CW proficiency: In 1964, Harry applied to the Signal Corps for some certification of his code speed record and got it. When in 1966 the Red Chinese claimed a girl of theirs had set a world record at 30 wpm, Harry trotted out his certificate. The Chinese claim was based on a "secret" speed run, excused as being so to avoid distracting disturbances that could have upset her concentration. Did it even take place? Who knows, but Harry's feat was not only a matter of government record, but personally witnessed by a roomful of onlookers, including the commanding general, Ben Lear. Harry says he handled code under "business" conditions and learned to concentrate accordingly.

Harry Turner was released from the Army in 1945. The Egyptian Radio Club (W9AIU) had been founded in 1929 and wasn't unknown before Harry's influence began to show in 1950; ERC had won the ARRL's Field Day contest three years in a row, 1937-39. Harry was soon elected treasurer of the Granite City, Ill., club and has held that post ever since. He's retired now from his variety of livings, having been railroad telegrapher and printer as well as having worked for 23 years in a paper mill. For a time he was editor-secretary-treasurer of the QRK low power radio club. Today he's usually around the club's 16-76 repeater, and every Thursday night sees him at the clubhouse by the Mississippi's Chain of Rocks Canal.

Harrison L. Church WØKX/9
Box 126
Lebanon IL 62254

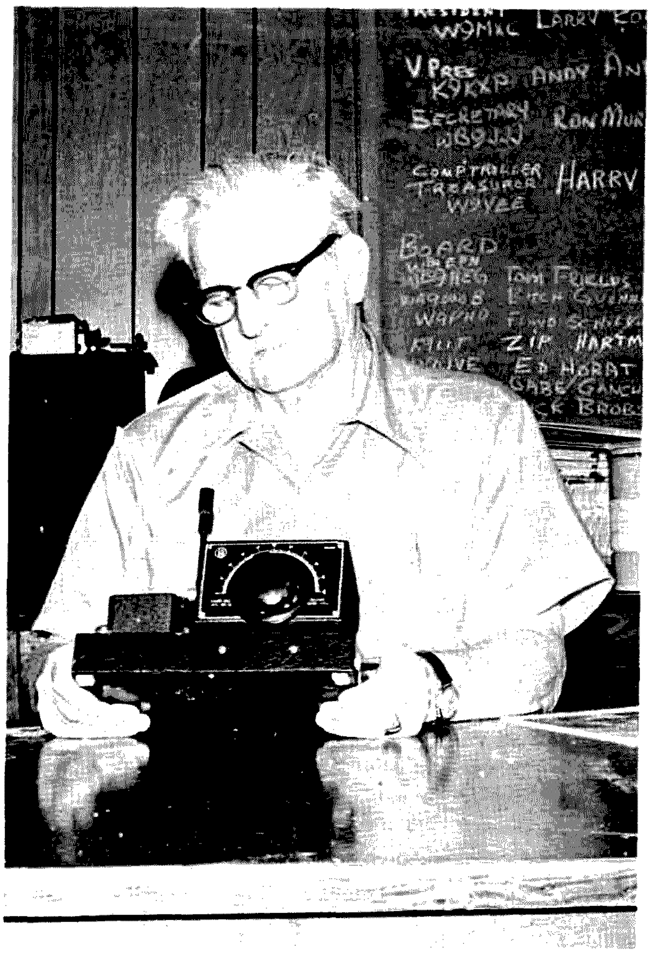

Harry Turner W9YZE looks over the Millen Variarm VFO, like the one with which he decoyed Japanese in WW II. The rod sticking up is the "variarm" that turned the trick on this rig, with Harry providing the "fist."

What This Country Does Not Need

The eternal problem of acronyms is that they are great if you recognize them, but confusing when you do not. OTP stands for the Office of Telecommunications Policy, a White House Office – some feel it's another FCC . . . potentially.

The head of the OTP was asking the House Appropriations Committee recently for an increase in its budget, it being noted that the OTP is currently a "way station" to a comprehensive federal agency handling communications matters in the future. However, it was acknowledged that the time was not ripe for a stronger office outside the Executive Office of the President. OTP was asking for $8.9 million to run the 48-man office for the next year. The FCC got a much stronger going-over when it came up to discuss its budget, asking for $49.8 to run that agency in the coming fiscal year. The OTP has been heard in the past urging the FCC to faster action for the CB Service. As one astute observer has said: "What this country does not need is two FCCs . . . or maybe even one OTP!!"

A recent item in the newspapers called attention to a manpower crisis in radio spectrum management. John Eger, Acting Director of the Office of Telecommunications Policy, declared a "state of emergency" and announced a government-wide career development program to rectify the situation.

With the next international general frequency conference scheduled for 1979, worldwide allocations will be established through the year 2000 – and there lies the problem. Assignments of spectrum space are negotiated at these international meetings and the resulting agreements supercede national law. According to a study made at OTP's request, more than 57 per cent of the U.S. agencies' experienced and conference-tested negotiators will have retired by 1979 – leaving only 15 top-level experts to represent the United States. The study found that of the 194 individuals now involved in national-level agency activities for spectrum management, only 35 are principal managers with the negotiation, regulatory compliance, technical analysis and decision-making experience bearing on radio frequency management. Of that number, 20 are expected to retire before 1979.

According to a General Accounting Office report, such an impending personnel shortage could jeopardize the U.S. interests at the most critical international radio conference in 20 years, and could spell trouble for future users of the radio frequency spectrum.

For that reason the OTP has instituted the first government-wide career development program for the training and retention of the highly specialized personnel needed in spectrum management. "National and international concern mounts over the continued availability of spectrum space," the OTP said. "To respond to that concern it is necessary that an adequate investment be made in personnel development."

Reprinted from the West Coast DX Bulletin.

Jim Huffman's

What will be happening in amateur circles in January, 1986? We asked Hufco's WA7SCB, and here are his predictions:

The next ten years for amateur radio (and electronics in general) look to be the greatest ten years ever conceived by man. Improvements should come in two main areas to amateur radio: operations and equipment. As far as operating goes we foresee more and more hams joining the fraternity. Face it: The world is smarter nowadays and promises to be even smarter in the future. People in general are becoming more technically oriented. No one today hasn't at least heard of the computer, and most deal with computers every day. We even communicate with computers to pay our bills. This technological "brainwashing" of all mankind should prove to lessen people's fear of amateur radio. Twisting knobs, using a microphone, watching meters, and so on, are the so-called fears of amateur radio, but none poses as much of a psychological problem for the average man as it has in years gone by. And in ten years! All mankind will be ready to accept the possibility of communicating around the world via amateur radio.

The technological boom has also primed man's "escape" mechanism. He travels, he plays, he turns to drugs, all supposedly as his escape from the hard, cold technical world. And what better escape than amateur radio? Electric bills will never climb proportionately to gasoline bills. The average man can travel the world and never leave his cluster house, or condominium. Amateur radio offers him everything: the excitement of the DX contest, the enjoyment of the ragchew, or the unequalled pleasure of home construction. All this in ten years if we now realize the potential and spread the word that amateur radio is the greatest!

As far as pure technological advances in amateur radio go, look for computer controlled repeaters in the not too distant future. Look for computer controlled hamshacks next. Scanners that find an empty "slot" on the band. And new narrow bandwidth modulation systems that promise more hams per megacycle.

There are indeed paradoxes which will appear in the future. One involves complexity (sophistication) and lower cost; the other is complexity and simplicity. While one usually thinks of the more complex devices costing more, we are witnessing the opposite. More complex functions are being integrated to a simple chip and then mass produced, so that they cost less. And costs are going to have to go down in other ways (proportionately, of course, we will still have terrible inflation). Manufacturers will have to solve high labor costs to lower the prices proportionately, and manufacturers will! People should wise up in ten years, and start producing more. Look for per piece wages rather than hourly pay. A lot of people are using this already. The lazy worker earns a

be my guest

visiting views from around the world

Here to Stay

It doesn't hurt once in awhile to do your own thinking. I was listening to an on-the-air round table discussion of the FCC Proposed Rule Making Docket No. 20282.

There seemed to be two types of comments. One type came from ARRL loyalists who thought we should go along with the proposals as modified by ARRL management. Then came the comments from the die-hard, independent thinkers who inquired into the reasons for wanting the changes made.

The reasons for the changes seem obscure. If the proposed changes are for operator skill upgrading, certainly the existing five classes of licenses offer a reasonably wide spectrum.

If the reasons for these changes are for opening up one more class, the codeless class, we certainly don't need all this mountain of paper just for that.

So just why are we undergoing this massive rule making exercise? I'm wondering why not to stir up the troops, but rather to inject the question, "Why?" Change is fine if it's necessary, but what is really necessary about the proposed changes?

We are still, when the dust clears, going to plug in on the power line or battery, hook something to an antenna for the purpose of poking out a signal and hoping to get one back. We want to modulate that signal by some scheme (exotic, sophisticated, or otherwise). We're still going to be the same clever (or dumb) human beings at opposite ends, doing it all for the pleasure we get out of it. That part of it won't change, I hope.

So what is changing? Really, what does Docket 20282 gain for us? We are going through a huge paper exercise for a net gain of promises. Maybe we'll get a new 10 MHz segment – maybe. Plus we'll get some new guys who claim they CAN'T learn the code.

It was reported recently that doctors are getting disenchanted with the American Medical Association, the AMA, because it's too costly for what they get, and they don't look to it for leadership any more.

I belong to the ARRL. I support it where I can, but I'm disenchanted with some of the direction the ARRL gives. These thoughts might point the way to some changes not so much to the FCC Rules, but to the direction we are being led.

CW is outmoded. Who wants it? Okay, think that way. Maybe it doesn't happen very often, but once in a great while knowledge of CW turns out to be of great help.

If I were in trouble a long way from home, I'd surely try a CW contact on one of the Novice bands. The guy on the other end might be just a kid, and his CW might be slow, but I'd trust him to get my message.

No, we don't *need* to know CW once we pass the test (except at license renewal time), and I don't care if the FCC wants to grant licenses to those who CAN'T learn the code. But I don't wish to abandon CW. It's like another language. I want to keep it alive.

CW transmitters are the easiest to build and to operate. Before the advent of SSB they were the most efficient in miles per Watt.

We have tremendously sophisticated methods of communication nowadays: tropo-scatter, satellite, microwave, computers talking to computers, scramblers, high-density multiplex, and much more. In spite of it all, CW is here to stay. Our "friends" across the seas seem quite sold on it.

Paul L. Schmidt W9IDP
PO Box 105
Bloomfield IN 47424

1986

lazy man's wage; the hard worker has no limit to his pay.

Paradox number two is even easier to see. Complexity vs. simplicity. While on the one hand things are getting more complex, they are getting simpler, too. Already the average ham can put together systems of sub-kits into his own custom designed equipment. Witness the kits from VHF Engineering, the International Crystal kits, our own digital kits. In ten years it will get even easier. And while digital subsystems are easier to interconnect now, look to the time when it will be just as easy to fabricate your own complex analog systems, like a sideband rig. The complexity of the rig will be a function of your basic knowledge and how much you want to spend. With all the complexity you can design in, the designing itself and the operation of the finished product will become simpler. It will be much easier to use a computer autotuned rig that automatically matches any piece of wire on any band and tunes itself to optimum at the flick of a bandswitch. And that is what I foresee in the next decade. Our present day broadband rigs with their inherent compromise designs will give way to computer tuned rigs that have the same one hand operation with far improved performance.

The next decade promises excitement, adventure, and challenge. I guarantee that, no matter what happens, we will all rise to meet the occasion. So start to stand up now. Learn about logic, computers, analog, design, and so on. Although you may only be able to possess a cursory knowledge of such a broad range of matters, that cursory knowledge will allow you to interface some powerful subsystems in the "simplicity" of the next decade!

Jim Huffman WA7SCB
TWS Labs/Hufco
Provo UT

ou goons don't ever proofr

LETTERS

I insist that you print ev

A NATURAL

A recent article submission to Wayne written by me was rejected (so don't quit writing if you are rejected), but his always appreciated comments have prompted this open letter to you – the VHF-UHF ham.

One of my suggestions in the article concerning more effective use of our higher bands was the use of voluntary channels. *Note,* I said totally voluntary. My suggestion was to use the following frequencies as listening posts, so that any activity whatever in the nature of an opening would not go unnoticed, much like the use of beacons: 50.125 MHz, 145.125 MHz, 220.125 MHz, 432.125 MHz, and 1296.125 MHz. There is no magic choice about the frequencies, and I will gladly listen to any and all contrary suggestions. It is just that the .125 remains the same on all bands, the MHz portion is in a part out of the CW and General only areas (so more should be able to use them), and (lastly) their proper use would also be a must.

Even if you hear no signals, try a call on these frequencies. If everyone could monitor the same place (as I do on 50.125 MHz), he could go ahead and work on the bench, etc., and monitor just like FM. If you do find action on .125, move up 5 to .130 and leave the .125 open again. When one first listens he will tune around a little, so he will still hear you. The next guys go to .135, etc. On CW or SSB this is plenty of spacing, and has led to much activity here in the Midwest that I'm sure I would have missed. About 15 of us have tried it for over a year now, and the activity *and* gentleman's agreement to move have worked out quite well. With groups like Smirk increasing VHF activity, a common looking place seems to be a natural to increase activity even more. Comments anyone?

David J. Brown W9CGI
RR5 Box 39
Noblesville IN 46060

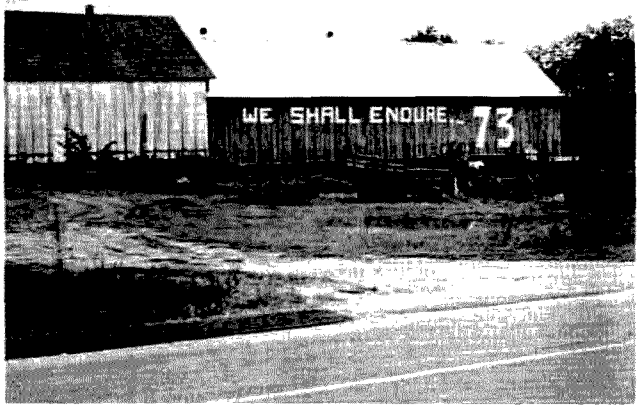

PEA-SIZED

I have been racking my pea-sized brain for many years and have nearly short circuited every brain cell that I have (there are only three left, I think) in a futile effort to break the 1 wpm CW barrier. It breaks my heart to part with these hard earned dollars but I will make a sacrifice and ask you to please send me a complete set of those revolutionary code tapes for $14.95, and please hurry before I short out those last three brain cells.

Oh yes, seeing as how I have been stumbling through all that technical jargon for years and years with the only result being a shorted out pair of ears, you had better send me a copy of the General Class study guide too, so that I can reserve one of my three brain cells for the technical bit. You will find one American Express compny money order to cover the whole smear. You see, I am so short on brain cells now that I can't even spell "company" correctly so please send the stuff fast before I completely short circuit and go up in a puff of smoke in an effort to duplicate the original "smoke test."

Richard J. Molby
Armed Forces Writers League
579th Ordnance Company
APO NY 09035

ENDURING

As life member no. 5 of your *73 Magazine*, I thought that you might be interested in a barn I came across here in Conn. I'm not sure if the farmer feels that he can endure the year 73 or the magazine.

Richard Johnston K1OJD
Simsbury CT

BACKGROUND

Just received my first issue of *73* (October), and would like to say how much I enjoyed it. I hadn't really seen the magazine before, as it isn't carried on any newsstands around here and the libraries don't get it. I subscribed on impulse and am glad I did. The format and content beat *CQ* and *QST*; the tone of the articles is sprightly and good-humored, yet informative. I commend you.

For those of us who haven't been reading for years, how about a little background info? Is the W. Sanger Green who does Ancient Aviator your father or some other relative? I found it quite enjoyable. Also, during the past few years, as I read the other ham publications, I ran across rather disparaging remarks about you and your publication(s). I am ordering a packet of back issues, but how about a retrospective look at whatever all that was about from your point of view, again for those of us who are new to the *73* circle?

Your comments and stand on advertisers who do not deliver as promised are a good thing and sorely needed. I've had trouble in that area myself, with hi-fi gear. Back in 1971 I ordered a tape deck from DEFA Electronics in New York, and it was only through the intervention of the New York State Attorney General's office and finally the Federal Trade Commission that they finally sent me a refund check just two weeks ago. (It hasn't cleared yet.) So keep up the good work in this area. As a helpful hint, let Wes Larsen (WN3ZHT), who wrote you about Trigger in the October issue, know that going to the Post Office to complain of mail fraud is a waste of time. The Postal Inspection Service does next to nothing about such things. Tell him to write the Consumer Protection Division of the Illinois State Attorney General's office and the Federal Trade Commission. Those agencies will try to *do* something, usually, while the USPS will send you a form letter stating that they don't think the mail fraud statutes were violated. I believe these laws are so peculiarly worded that most cases of what we would call fraud (failure to deliver, no refunds, shipping wrong items, etc.) are not included. The USPS, in conjunction with the Federal Trade Commission, did propose to broaden their protective stance (see *Federal Register*, March 8, 1974) but I don't know whether that ever was implemented.

Anyhow, glad to be in your group now.

William G. Martin
St. Louis MO

Thanks, William, for your letter. The Aviator series is being written by my father and seems to be very popular. Re the anti-73/WG stuff elsewhere . . . several factors are involved. If 73 was a failure they would ignore it, but it has been very difficult for

them to see 73 becoming the largest ham magazine, with the most ads, the most articles, etc. After some two generations as The Establishment, QST is taking it very hard. My outspoken editorials have not cemented friendships . . . the fact is that I have many admirers who appreciate my seeming radical viewpoint and many enemies who fear and resist the changes I bring about. My basic philosophy is that amateur radio is fun! One of the results of this fun, if it is not ham-strung (pardon), is a wealth of inventions, pioneering and new ideas. Even with the severe restrictions presently in force, which I would like to see removed, virtually every major breakthrough in modern communications has originated with amateur radio. While I am not at all sure what a man can do in this world to be worthy of the privilege of having lived, I have chosen the role of trying to help, in what small way I can, the rolling forward of progress via ham radio. Via 73 I try to encourage new developments, the growth of amateur radio in small countries, etc. My critics say I'm trying to make money from amateur radio, while those around me complain that I am ignoring the money end and getting into trouble as a result . . . witness the IRS problems. I don't know if that explains anything . . . and thanks for the word on dealing with frauds – Wayne.

BLACKSMITH TYPES

Just want to let you know that I enjoyed your Oct. 1975 issue very much. This issue was right up my alley, since I am not interested in VHF, repeaters, or any other phase of ham radio other than building. The articles in this issue are very desirable for us blacksmith types who aren't happy unless we can get dope on building something new. Sure would like to see a couple or three issues each year for us screwdriver mechanics. Also, how about another super jumbo king size surplus edition each year?

R. F. Herbig W6ME
Oceanside CA

YASME

The YASME Foundation is active again and is sponsoring once more the world-wide DXpedition of Lloyd (W6KG) and Iris (W6DOD) Colvin. The Colvins have already operated under 50 different calls and are now trying for 100. First stop will be VR1Z (15 Dec 1975) and then VR8B (1 Jan 1976). The latter call will count as a brand new DXCC country. Transmitting frequencies are:

CW: 3505, 7005, 14050, 21050, 28050. (Listening up 5 kHz or just inside General Class band.)

Phone: 3795, 7095, 14195, 21255, 28550. (Listening up 5 kHz or just inside General Class band.)

Donations to YASME (tax deductible) are requested but not required.

Lloyd Colvin W6KG
Iris Colvin W6DOD
PO Box 2025
Castro Valley CA 94546

LESS INTIMIDATED

Just had to comment on Wm. Browning's article on logic circuits. AND, NAND, OR, NOR, etc., have stumped me for quite awhile. Now, however, I feel at least a little less afraid of them – or should I say intimidated by them. Thanks much.

J. Hutchinson
Verona NJ

THE SALEM 50

Here are a couple of photos taken on opening night of the Novice course sponsored by the Salem Civil Defense Communications Team at Salem (NH) High School. The instructors are WA1HWE, WA1OAQ and W1PFA.

The total number taking the course is 50, with two or three people from one family in several cases.

Bill Loeffler W1PFA
Salem NH

GETTING OUT

I sent for tapes and a subscription to *73 Mag* a month ago! The tapes have been here OK – but no mag. I requested a current issue. Nothing has come. I do *not* need the mag now as I cannot get up to 13 wpm – so I can't pass the General. Since I only wanted to use voice, I am getting out of the whole thing. No more trying for me.

So – please cancel my subscription – immediately – and *return my $8.00* sent to you on Aug. 21, 1975. Thank you.

Fred Lichtgarn
Santa Barbara CA

It may be difficult to believe, but it takes about six weeks for a new subscription to get into a computer, be printed out, and sent to the printer for mailing . . . get mailed and reach a subscriber. We are working on shortening this . . . with our own computer . . . but that is a big deal . . . about $75,000 . . . it will take a few more months to get set up.

I have canceled your subscription . . . there is no way to stop an issue or two of the magazine going to you . . . my compliments . . .

Now, regarding your ham license . . . I am truly ashamed of you. I see little girls of ten getting their General licenses and here you are trying to tell me that a ten year old girl is better at sticking to something than you are.

Your letter is going to get a lot of use . . . I intend to hold it up as an excellent example of why it is important to have a code test for the license. If someone cares so little about getting a ham ticket that they won't even spend that little effort, there is no way that they can be worth anything to us.

It doesn't take brains to get a ham license . . . it doesn't take education . . . it doesn't take any talent . . . all it takes is some work and you are too lazy. We have hams who are so dumb they can just barely talk . . . so uneducated they can't write much more than their name . . . but they hang in there and get their ticket even if it takes them a year of hard work.

You only wanted to use voice . . .

well, that's about all I've used over the years, but there have been times when it has been important for me to know the code . . . it saved 85 lives once, believe it or not. Including mine.

Maybe I'm being harsh, but you sound suited to what I am hearing on CB where it takes nothing more than a reach in the pocketbook to get on the air and waste your time . . . and wait for death to eventually come along, having added little to the world. — Wayne.

LIKE NBC

Here is some information regarding continuing PR efforts in our area. I hope the information will be of interest to other hams, not only in regard to PR, but also in the use of microprocessors and terminals for support of their amateur activities.

Solid 2 meter communications combined with the world of computer technology to provide communications for the State Sanctioned Canoe Races at Milford, Michigan. Race progress from various checkpoint stations along the Huron River were relayed to Race Control via WR8AAA.

Race operations were tightly controlled by the base station in order to cut down on unnecessary transmissions as pertinent race information was being patched to the P.A. System.

Also, located at the base station was a computer video terminal which, combined with remote monitors, was used to format and display race progress to the spectators.

Thirteen members of the Milford Amateur Radio Club participated in the event through the courtesy of WR8AAA. The home brew video terminal was provided by W8JWQ, who normally uses it with an 8008 microprocessor system.

W8JWQ typing race information into his home brew video terminal during the Milford Canoe Races.

Response to the overall effort was very favorable, with many PR points being scored with city officials. For example, witness the following excerpt from the *Milford Times*: "Allen extends his thanks to the Milford Amateur Radio Club for providing superior communications services during the entire two day event. One racer said the local group's services were 'like those of NBC'."

John Moore W8JWQ
Milford MI

FREE PLEASURE

"FREE — one trip to Hawaii for 10 days." (One year from now it's just a memory.)

"FREE — a ticket to the Metropolitan Opera." (One year from now just a musical memory.)

"FREE — one year's subscription to *73*." (Send 3 year subscription and pay for two and get a free year of constant ham pleasure.)

Enclosed please find my renewal and subscription for three years to *73*.

Syd Tymeson W3FL, WA1BXD
Takoma Park MD

GLITCH

We (at Collimation, Inc.) have found an interesting item you may wish to pass on to your readers of *73*. It seems that the 555 timers from National, Signetics and Raytheon (and perhaps others) have a glitch on the falling edge at about .8 V, which may cause some TTL devices to see two clock pulses where only one was intended. I have enclosed a diagram depicting the problem and the solution we use.

Joe Magee WA5ACA
Austin TX

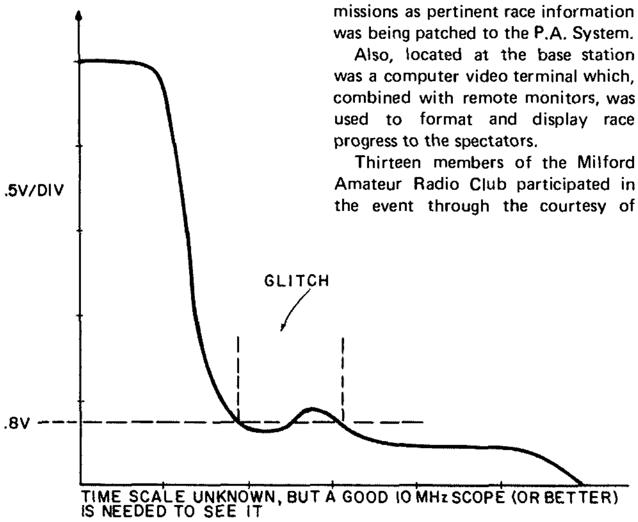

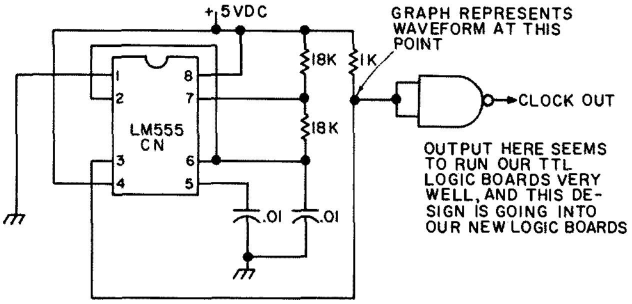

LM555 clock glitch and corrective circuit. .8 V represents the lower boundary of the uncertainty area for TTL logic signals. A signal which hovers about that point may very easily cause several transitions in a TTL gate. 74174s seem most prone.

GREEN'S FAULT

Keep up the good work in *73*. I'm having a tough battle with the ARRL conservatives down here in Houston, Tex. According to them, "It's all Wayne Green's fault."

I wonder if all the repeater boys know who it was that made the 2 meter band what it is.

Herbert G. Robinson K5URX
League City TX

CRAZY TAPE

I just got word that I finally passed the code test to get my Advanced license and upgrade from a Technician. Since I just graduated from Purdue in Electrical Engineering, passing the written exams was a snap, but the code was a real snag. I got your 14 wpm backbreaker last spring, after I had already flunked the code once. So, once I got the tape and read how great it was, I figured that all I would have to do is listen to it and breeze through. Much to my surprise, I proceeded to flunk the test twice in six weeks. I was pretty frustrated, and just hung the whole thing up for the summer. I got the bug again towards the end of August, and I finally discovered how to use the crazy tape. I found out that I not only had to copy the tape, but copy it *easily*, almost unconsciously, for 20-30 minutes at a time. When I got so that I could talk to my wife and still copy easily, I knew I was ready. I went into the exam room and copied about two minutes of the tape, corrected a couple of mistakes and copied the last two minutes correctly. The difference was how hard I worked on the tape beforehand.

I'll be in Africa next year, and hope to see you all in the pileups!

Joe Ely WB9PVL
Lafayette IN

WHITE ELEPHANT

Your editorial musings about timers sent me to my new copy of Part 97 to do some checking, and sure enough, there is no legal requirement for a timer on either the input or the output of the repeater. Part 97.88d does say that there must be a timer on the CONTROL SYSTEM so that in the event of failure the repeater is taken off the air. Where this great misconception got started I do not know. I am a control station with one of the busiest repeaters in the New York City area, WR2ACD, an open machine with a weekly user list of about 500-600 steady people. With the transients it goes to about 650 a week. In this case, with the repeater on the air 24 hours a day and getting steady use for about 22 of those hours, a timer is needed to keep rag chewers at bay during "traffic hours," those hours when the commuters take over. At other times, however, rag chewing is usually the mode of operation, and in this case, the timer becomes a white elephant.

As I travel throughout the area I am amazed at the number of machines that have timers and, frequently, not many users. Again, I suspect the great misconception. It is certainly an unnecessary inconvenience. Man does not talk in two to three minute segments with a three second pause. It is needed on the machines with large populations, but why with the less populated machines? Having dispelled the "because it's law" myth, maybe more repeater owner/operators will reconsider their stand on the issue. I think it would make operating a bit more natural. Of course the timer on the control system, be it wireline or 220 MHz and above, must remain in force to keep the uncontrolled repeater off the air.

Stephen Mendelsohn
Control Station of
WR2ACD/WR2AFE/WR2AEH
Licensee of WR2AFS/WR2AEN
Flushing NY

MSI

As a subscriber to your wonderful mag, I would like to tell your readers about a possible channel of amateur publicity.

For the Amateur Radio Club looking for a new Public Relations medium, I have one to suggest. The medium is the MSI program found on many CATV systems. MSI is a mechanized presentation of information like time, wx and news. Usually seen on a non-broadcast channel, MSI may be coupled with a 35 mm slide projector. The slides on the projector can be pictures of local buildings, advertising, and public service messages. The slides flash on the screen for usually 15 seconds and then the MSI unit switches back to the wx, time, news, etc.

Your club can have a Public Service Announcement on the MSI cable channel announcing when the

Continued on page 14

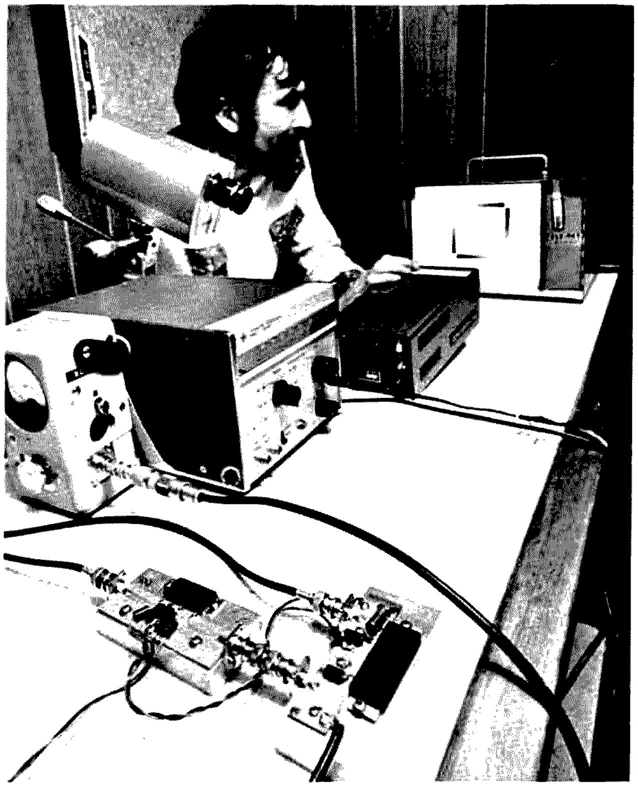

Irwin Dresner W2TRP, with the solid state ATV transmitter which he developed.

Ed Pillar W2KPG, receiving test pattern from W2TRP on LIMARC ATV Technical Net.

SPURRING ATV

Despite the advice of some engineers that it could not be done because of an internal decoupling network, electronics engineer Irwin Dresner W2TRP, of Syosset, L.I. (NY), succeeded in video modulating a Motorola 440 MHz MHW-710 power module with a full 4.5 MHz bandwidth TV signal. His fifteen Watt output signal, coming from a palm-sized solid state TV transmitter, was received by K2RIW, W2KPQ and WA2APJ on September 2nd during the weekly meeting of the LIMARC ATV Technical Net. W2TRP will make full disclosure of his techniques to industry and amateur radio in the hopes of spurring ATV activity.

The ATV Net operates on the LIMARC 146.85 MHz (output) repeater and transmits video on a simplex basis on 439.25 MHz. Signals are receivable throughout the metropolitan New York area each Monday evening from 10 to 11 pm.

I'm enclosing some photos of some LIMARC ATV Technical Net members which you might find interesting.

Ed Pillar W2KPQ
Syosset NY

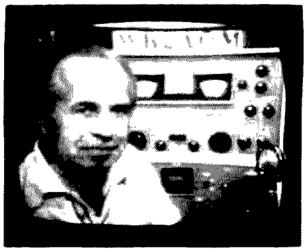

WA2APJ, Wantagh.

WB2AQM, New Hyde Park.

WA2YQT, East Meadow.

WA2OHM, Massapequa Park.

Autobiography of an Ancient Aviator

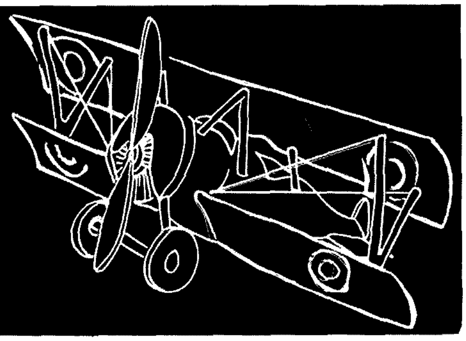

W. Sanger Green
1379 E. 15 Street
Brooklyn NY 11230

Back In The Air Service

After the two crashes I told you about last month, I finally got the message about flying the types of civil airplanes that were available at that time. The luck that was with me in the Lindenhurst, Long Island crash, where the ground that came up and hit us happened to be in a field where a fire department was drilling, couldn't be expected to continue. If I wanted to keep on flying, the answer was better equipment. In those days it was either flying mail or getting extended active duty in the Air Service. I opted for the Air Service with the idea that, if I found it was the kind of life Cleo and I wanted, I would take the examination for a regular commission. So I applied for six months active duty. In May 1925 I received orders to report at Langley Field, Virginia for six months active duty from 1 July.

For $50 I bought a model T Ford sedan that I had taken in trade on a new Hupmobile. It was in good mechanical condition so I just piled

> **The ground that came up and hit us happened to be in a field where a fire department was drilling . . .**

our luggage in and drove to Langley. When I reported in I was assigned a house that I later found was supposed to be a major's quarters – and I was only a first lieutenant. Too good to be true. A few days later Cleo and Wayne arrived by train.

I was assigned to the 11th Bombardment Squadron. They had one hangar and seven active Martin bombers, plus one in the back of the hangar that was being cannibalized to help keep the rest in the air, and another that was so near the junk pile that, when it was in the air, its tail wagged like that of a dog. These NBS-1s were stick and wire jobs that were built during WW1. They were biplanes equipped with two Liberty engines.

My first flight in one of these bombers was on the 4th of July when, as co-pilot to Capt. Early Duncan, the Squadron commander, we lead a seven ship, three hour, formation flight to Richmond and returned. In a few days I was checked out in the bombers. The NACA (National Advisory Committee for Aeronautics) had a hangar on the field for their experimental planes. Tom Carrol, a very good friend of mine, was their chief test pilot and through his good graces I was able to borrow various types of planes, most of them single seaters, such as Spads, SE5s, Fokker V11s and Vought VE7s, to have fun in. I reciprocated by checking Tom out in Martins.

During my six months tour at Langley I made some 52 cross country flights in DHs and Martins. Some were eventful (mostly due to the very sketchy weather information available), others just pushing the ships along: Bombers cruising at about 70 mph and DHs at about 85 if you weren't bucking a wind. The ground doesn't go by very fast unless you are right down on the tree tops. Some of the more important trips I made were to Bolling Field at Anacostia, D.C., when it was my turn to bring back the 5 gallon can of grain alcohol that was needed each week to keep the "Anonymous Alcoholics" on the "prohibition dry" post properly lubricated. It made about ten gallons of gin, but then there were a lot of thirsty subscribers on the post. If Wayne can remember (he was three years old at the time) he can attest to the gin's potency, as he somehow got hold of a glass with a little in it and choked it down. He was reeling before Cleo realized what had happened.

Around the first of August, Capt. Duncan was transferred to the Command and General Staff School at Fort Leavenworth. I was quite flattered when Major (Tubby) Westover asked me if I would take over command of the 11th Squadron until Lt. Ken Walker arrived in December to be its regular C.O. Westover was Commandant of the Field so I said "yes" even though I knew it meant a great deal of responsibility as well as the loss of what otherwise would be leisure time. So, after an audit of the squadron fund, I took over Capt. Duncan's cigarette pock-marked desk.

The personnel of the 11th consisted of four reserve lieutenants, on active duty like myself, and 124 enlisted men. I inherited an excellent team of noncommissioned officers: a first sergeant who, with the squadron clerk, ably handled the mass of squadron paperwork, daily work assignments, discipline, etc; and a supply sergeant who not only knew his way around Langley but had excellent connections at several other Air Service posts, as well as nearby Fortress Monroe and Camp Eustace. He could get almost anything needed in record time. No questions asked. The mess sergeant seemed to be "grouse" (grumble) proof, which is saying a lot. He had two cooks and two or three KPs (kitchen police) to help, and had to operate on a very

> **NCOs can teach a young lieutenant much more about running a squadron than any officer's school . . .**

tight budget. Our hangar crew of mechanics and specialists and their maintenance shops were bossed by a master sergeant who had been in the service for about 18 years and was "bucking" for a 20 year retirement. Very few things escaped his notice, and when he had inspected a ship and signed it out to the line you could be sure that it was airworthy. These NCOs can teach a young lieutenant much more about running a squadron than any officer's training school. However, a squadron C.O. is needed to oversee and coordinate the work of the several jealously guarded squadron domains.

The administrative procedures I set up seemed to work pretty well. The four lieutenants and I took turns at standing the reveille roll call every morning. Two mornings a week I had a short staff meeting attended by the officers and the first, supply, mess and hangar master sergeants, to discuss and settle any squadron problems and also to finalize the next day's operations schedules. The other four mornings a week I was in my office right after barracks inspection to sign papers and to discuss the problems of any of the men. One of the officers or myself had to be available on the post at all times day and night.

About the end of September a major arrived at Langley with his family, so we were moved to a house in the lighter than air section of the field. About a mile from my hangar.

I'll get back into the air again next month with a forced landing or so. Also a tragedy.

AMSAT

Joe Kasser G3ZCZ

At the AMSAT general meeting, the four directors whose terms of office had expired were reelected. The AMSAT board now comprises seven persons: Perry Klein K3JTE, Chuck Dorian W3JPT, Jan King W3GEY, and Bill Tynan W3KMV, who were just reelected to two year terms of office, and Tom Clark WA3LND, Bill Dunkerly, Jr. WA2INB and Larry Kayser VE3QB, who are in the middle of their terms of office. Bob Carpenter W3OTC was later appointed Secretary, Gary Tater W3HUC, Assistant Secretary, and Roy Rosner WB4UOX, Treasurer. The meeting was attended by about seventy persons. Reports were given on the progress of the next radio amateur spacecraft – the Phase III high orbit project – and on the AMSAT-OSCAR 6 and 7 command and control activities, including the changeover to microprocessor control at the ground command stations.

G3ZCZ displays the new OSCAR award certificate at the AMSAT General Meeting. Photo by W4ART.

Certificates for the new "OSCAR" Award are available and were first shown at the meeting. Full details of the requirements for the award and of the meeting are published in the December 1975 issue of the *AMSAT Newsletter*.

AMSAT-OSCAR 6 celebrated its third birthday on October 15th and AMSAT-OSCAR 7 its first birthday on November 15th. QSL cards are still available from AMSAT for reception reports of the special relay transmissions from the satellites commemorating these anniversaries. The Jet Propulsion Laboratories (Radio Club) at Pasadena, California held an OSCAR month from October 15th to November 15th, with special exhibits depicting the two spacecraft.

A distance record for amateur satellite relay communications has been claimed by G3IOR and W6CG, for a QSO made over a ground distance of nearly 6000 miles. As this path is well out of direct line of sight range, the contact was made using meteor scatter techniques on successive evening orbits. The QSO took two weeks to complete.

The FCC has authorized radio amateurs in the USA equipped for RTTY to transmit ASCII coded signals through the AMSAT-OSCAR spacecraft for experimental purposes. AMSAT is interested in receiving proposals for and carrying out experiments in transmitting computer data via satellite.

New orbit books for 1976 listing all AMSAT-OSCAR 6 and 7 orbits are available from Skip Reyman W6PAJ, PO Box 374, San Dimas, CA 91773 for $3.00 (or 20 IRCs) postpaid.

W2GN has completed tests operating mobile in motion using SSB, via AMSAT-OSCAR 7 Mode B – with fantastic results. His signals were fully audible over most of the East Coast of the USA during the 15 minutes or so that the spacecraft was within his visibility range. These experiments have demonstrated the superior downlink capability of Mode B. If you would like to listen to really good downlink signals for a change, try listening to AMSAT-OSCAR 7 Mode B.

Support The AMSAT Team That Brought Us OSCAR 6 and 7!

Since November 1974, amateur radio has had not one, but *two* long-life OSCAR satellites available for use by the international Amateur Radio community:

- AMSAT-OSCAR 6. Launched October 15, 1972 by NASA piggyback (with NOAA-2, which has long since expired), OSCAR 6 continues to function, having tripled its original one-year lifetime goal.
- AMSAT-OSCAR 7. Launched November 15, 1974 by NASA piggyback with NOAA-4, OSCAR 7 exceeds the capability of the first six OSCARS *combined*.

AMSAT is now developing Phase III spacecraft, intended for much higher orbits. AMSAT Phase III promises to be a considerable step forward beyond OSCAR satellites launched to date, making possible reliable communications over transcontinental distances for hours at a time.

LETTERS

from page 11

meetings are, upcoming hamfests, or whatever you can dream up. You will be wise to keep the number of words at a minimum because the slide has a tendency to look confused with heavy wordage. It also must be pointed out that 15 seconds may be too short for some trifocal wearers to wade through a girthy text.

If your local CATV system has an MSI program, approach the manager and ask him if he has room on his slide projector. He will be more inclined to accept your request if you make the slide yourself. Just have some arty member make an announcement on a 10 inch or so square card and then take a slide picture of it (in color would be a good idea).

Neil Serafin WB2VRZ/2
Syracuse NY

A LOT OF BULL

I'm going to agree with S. Reed and his opinion about *QST* in the October issue. My subscription to *QST* is almost over. I am 13 years old and planning to get a Technician ticket in the near future. By reading an article in *73*, I know a little more than I did yesterday. Steve's letter was most meaningful and I agree with it in every way.

I am going to subscribe to *73* as soon as possible, for *QST* is a waste of time and money for me.

I read *73* whenever I get a chance to. When I do, I turn right to the letters and read the criticism of CB and the CBers. It's unbelievable to find out how many people like CB and the chickens who are on it, but please don't think they're all bad.

I agree that a large percentage of it is just a lot of bull (like channel 10 with the truckers and other stations that don't care if there is someone modulating with another person). If you wish to talk and ask for a break, you won't get one, and, if you do, just try to talk when there are twelve other people talking, plus the mike keyers, garbage mouths and smokey reporters.

If you have a ham ticket, keep it! If you have a CB license — that's alright — don't ruin it or ruin it more. If you're wondering, my father has a CB license, but for me to understand radio I might as well make the best of it with my realistic Navaho TRC/30A. Keep printing those letters!

T. Carlsen
Manlius NY

PINHEAD—PART I

I've been using your 13 wpm code tape for the past few days. It is *definitely* a buster. On my Lafayette player it runs upwards of 16+ wpm, so I use the word thirteen advisedly. I've been a Tech since 1967 and 5 wpm (less numerals and punctuation) used to be like the Myth of Sisyphus. I used to count the dots! I nearly went up the wall with the "IEEIE" code group. Luckily, I'm not an epileptic, or else I'm sure I would have had a grand mal seizure. Gonna take the General exam in a few weeks and if I don't pass the 13 wpm, I'm getting a CB rig and call myself "pinhead". Wish me luck.

Howard J. Margulies WB2FYY
Brooklyn NY

PINHEAD—PART II

After 45 days of bedlam with *73*'s 13 wpm tape, I finally got up the nerve and took the test. Well, I passed, copying roughly 2½ straight minutes before the panic and temporary palsy set in. I guess the realization that this was actually the dreaded "code test" was too much to bear. Now comes the real test of endurance: waiting for my ticket to arrive.

Howard J. Margulies WB2FYY
Brooklyn NY

PROS AND CONS

This is a report on my progress with the *73* code tape I purchased from you. It was the 13 wpm plus tape.

The tape sure did help me over the hump. I was up to about 10 or 11 wpm and could not seem to get beyond that. Mastering that tape did wonders. I spent a total of six hours and thirty minutes with the tape.

I went down to the FCC office here in K.C., Mo., in July, and passed the General test just fine. I then went back in August and passed the Advanced test. I got my General ticket in September and am now waiting for my Advanced ticket.

I think your magazine is the best and those editorials are something else. That is the first thing I read and the next are the letters, which are very enlightening as to the thinking of your readers. Sometimes the pros and cons make me wonder which is right and wrong.

Melvin B. Walker WBØOTW
Raytown MO

Pros are right, cons wrong. — Wayne.

COLLECTOR'S ITEMS

Just a little nostalgia and then I'll get to the point. Back in the late 30s I went to work for RCA Communications out at Rocky Point and got my W2 call — it was W2NSQ. So what you say? Well, wid ur W2NSD, we're both in a pretty close bracket and I have always been able to identify with you for that and a few other reasons. Almost 20 years ago you began publishing your *RTTY Bulletin* — gee, come to think of it, that was *24* years ago! Well, anyway, your Radio Teletype *Bulletin* grew and got a lot of us really turned on, AND provided needed information and techniques. Then came the RTTY column started in 1955 (I believe) in *CQ* when you were running that one. And *then* you had the perseverance, drive, etc., to bring out the *RTTY Handbook*. I have a FIRST EDITION (that was in 1957, if my memory serves me). Anyway, this was just what it took to provide a source of information, a place to go, to get the dope on this RTTY thing. I've been into it ever since!

Well, now what I see coming up is this computer deal! Wayne, this is great! You are coming out with this *BYTE* bit — what a wonderful thing! Comes now a place to find info and knowhow and a chance to really get into this digital scene. So much of it is kicking around but how can a guy get started? Now comes *BYTE* and here is

NO STRINGS

My writing efforts have always been slanted to aid those with limited hobby budgets, by describing more economical methods. Continuing in that vein, in the face of ever-escalating prices, I wish to share an idea which gives more dollars for buying amateur goodies.

For a few years I have enjoyed a free bank checking account which pays 5 percent interest. Personalized checks, air mail stamped envelopes and FDIC insurance are a part of the package. No strings.

Other banks in Massachusetts and New Hampshire offer similar service, but my satisfying experience has been with Home Savings Bank, 69 Tremont Street, Boston MA 02108.

Gene Brizendine W4ATE
Huntsville AL

the answer. Wayne, I'm all for you on this. This is the first step – with *BYTE* going you'll get enough together pretty quick to be able to come out with a computer/digital techniques handbook, and, if I know you, it won't be long coming. So – here is my check for ten bucks to get in on the charter subscription to *BYTE* and I sure HOPE you have a #1 September issue to send along to me – these will be collector's items!

C. P. Cook W5YOU
Houston TX

SETBACK

Amateur radio operators in Tulsa, Oklahoma received a setback on September 18, 1975. The "Tulsa Metropolitan Area Planning Commission" Adjustment Board ruled that amateur operators *do* have the right to have a radio tower and antenna at their residence. However, they ruled, although antennae height was unlimited as far as they were concerned, the tower *is* a structure and as a structure was limited to a 26 ft. maximum height. This ruling is being appealed, of course. The Board indicated that the city ordinance was unclear and needed to be clarified or rewritten. This ruling was made in the case of a group of local residents vs. Jim Picket K5LAD. The Tulsa Repeater Organization, in cooperation with the Tulsa Area Radio Club and the Broken Arrow Radio Club, are drawing up an ordinance proposal to present to the TMAPC to use as a guide for adopting a new ordinance.

Anyone wishing to contribute specific wording or ideas for the ordinance or the K5LAD legal defense fund may do so by sending to Box 1422, Tulsa OK 74101.

Jerry Broderick WB5NXB
Public Relations
Tulsa Repeater Organization
Box 1422
Tulsa, Oklahoma 74101

ALMOST READY

I just wanted to drop a note to you guys letting you know that I am really impressed with one of your advertisers, S. D. Sales Co. Despite today's runaway inflation, an introduction to tomorrow's world of digital electronics is available today with S. D. Sales' Digital Clock Kit on yesterday's experimenter's budget. This is really a relief to get into a new area of electronics and build a device for just a little more than a sawbuck.

By the way, I would like to thank Paul S. Vydareny WB2VUK, Jim Volstad DA1JV and Ken Mahoney K6OPG for the letters of encouragement and assistance in response to my letter published in your May issue of *73*. It will not be long now before I am ready to take my ham exam.

SP5 Kenneth E. Wigger
HHB 1st Bn 1st ADA
APO NY 09077

INTEREST-AROUSING

Enclosed are the orders for certain items and for reader service. I am a teacher of physics, chemistry, and physical science. I hope to start an amateur radio club in the high school soon and possibly affiliate with one of the MARS systems. There is some possibility of starting an electronics class in the future, as there is none now here in the Nuernberg (Germany) American High School for U.S. military dependents.

The high school has a computer and terminal for one class in computer math and one in business computer work. I am subscribing to *BYTE* to learn more about computers, particularly at the hobby level, which should be interest-arousing in high school students.

In the past I have sponsored Electronics/Amateur Radio/MARS (Air Force) in Okinawa and in two different bases in Japan with good response. I hope to create interest here. Any other publications or suggestions along both the radio and the computer lines as applied to high school level students will be appreciated.

I have applied for a German callsign through the U.S. Army, as we are requested to do, via the German Post Office (who issues the calls), but it has not arrived as yet.

J. Worth Gurley W7GH
Nuernberg American High School
APO NY 09696

HAM HAWKS

The article in *73* (October, 1975), by John Murray W1BNN, was certainly nostalgic of early flying and the old Five Meter band. One important and interesting fact omitted by the author, however, was that the famous Frank Hawks was a ham! Indeed. And a good CW man he was. I recall working him several times on 40 meters in 1935. His call was W1IJI.

Ben F. Holloman W5CP
Dallas TX

FIRST RATE

Thank you for putting out a first rate magazine.

Kenneth D. Grimm K4JGI
Sweet Briar VA

LO AND BEHOLD

The FCC exam had me scared. I bought one of those question and answer books, failed the exam, lost 9 bucks, made my wife mad and lots of other bad things.

Lo and behold, *73* says, "purchase one of our books and breeze through the tough FCC exams." Well, I did!

Yesterday (9/3/75) I passed the Advanced amateur exam. Whether or not I breezed through, I don't know, but you have the best book out, and take it from one who knows.

If you really want a simple explanation to a complex question, purchase a study guide from *73* – and then face the examiner with confidence.

Ancel W. Norris WB4AUB
Birmingham AL

WHERE ARE THEY?

On page 8 of your magazine for October 1975, there's a well written article by a 16 year old. These are my views also. Formerly a general contractor, my knowledge of electronics can be put in a thimble. Why not take heed of this youngster's letter and start devoting articles to us non-eggheads in electronics? We just want to be ham operators.

I'm a subscriber to both *73* and *QST*, but find little for persons like myself to really read and enjoy.

Just where are all these hams who want to help amateur radio to continue, and help persons such as myself and others to become hams???

Your tapes are helpful.

Basil W. Polenchak, Sr.
Box 81 SV Sta.
Andover MA 01810

ONE IN THE BAG

I have decided to gamble $16 on the presupposition that your magazine will continue to hold my interest for an additional three years beyond my current expiration date. As best my records show, we are talking about *extending* my subscription to the March, 1981 issue. I'm assuming that you will accept this inflation-fighting effort, understanding that a subscriber in the bag is worth three in the hands of the competition. Therefore, please find enclosed my check for sixteen dollars.

The basic TTL primer article by WB5IRY (Aug. 75) was excellent and much needed to get me started in IC *understanding and experimentation.*

Keep up the good work.

Joseph R. Nelis, Jr. K3JZD
Trafford PA

ON THE GROUND FLOOR

I enjoy *73* very much. I have been getting it on newsstands, but when I read subscriptions were going up soon I decided to take advantage of the lower subscription rate while I still had the opportunity. So, herewith is my check for $8.00, for twelve issues of *73*. Thank you.

I would like to get in on the ground floor with a charter subscription to *BYTE* but I will have to wait until later in the month. But you will be

Continued on page 20

CONTESTS

CONTESTS & AWARDS from Jock ZL2GX

ASSISTANT CONTEST MANAGER - PETER KENNY ZL2QK

Jock White ZL2GX, one of ZL's best known hams, will be leaving New Zealand by air 12 December 1975 with his wife for a long awaited holiday in the United States. Jock is well known on the bands and through *Break-In*, the NZART Official Journal published monthly. For 27 years he has been Contest and Awards Manager, issuing certificates and awards and writing the column, "The Contest Manager Speaks" (in more recent years, "Contests & Awards from Jock ZL2GX, with Assistant Contest Manager Peter Kenny ZL2QK"). This involves lots of work — sometimes running into five pages of copy faithfully turned out in a busy life (he is the Headmaster of a large school in Gisborne). Jock has fostered ham radio with the same tremendous energy he throws into all his work, and his and Beattie's hospitality to visiting hams has been fabulous.

Visiting ham friends in the US will be an enjoyable experience for them both. If you meet him, he'll hit you like a whirlwind, strike you with his humanity, and leave you the better for knowing him. He's a big man in every way.

NATIONAL CAPITAL DX ASSOC. USA BICENTENNIAL AWARD

The award will be issued to any licensed radio amateur in the world for contacting ten different members of the NCDXA using the special bicentennial callsigns during the 1976 Bicentennial year. Any band or any mode from 1.8 to 29.7 MHz may be used but there will be no endorsements for band or mode or for more than 10 QSOs. The fee for the award is 50¢ for all US stations, but free for all DX. No QSLs are required; send log information only to: NCDXA Awards Manager, Raymond E. Spence W4QAW, 10013 Coach Road, Vienna VA 22180 USA.

NCDXA MEMBERS:
AC3AFM, AC3AFQ, AC3AZD, AC3BQV, AC3BWZ, AD3CHP, AC3COR, AC3CRE, AC3DBT, AC3EZT, AA3HRV, AC3KA, AA3KSQ, AA3MBQ, AA3NHG, AA3NGS, AC3NL, AC3QW, AC3SW, AD3EH, AC3ZNH, AD3ZAW, AC3ZSR, AD4CFB, AD4CTY, AD4DXO, AD4EBY, AD4EKJ, AD4GKD, AC4IDG, AC4KFC, AD4KQB, AD4OMR, AC4QAW, AC4UMF, AC4WSF, AD4WVT, AC4WWG, AC4DPS, AA4HPF, AB2EXK, AC2GHK, AC9SZR, AC3RX.

DELAWARE QSO PARTY

Starts: 0001 GMT Saturday, December 6
Ends: 2400 GMT Sunday, December 7

This year's Delaware QSO Party is sponsored by the Delaware Amateur Radio Club W3SL, and is open to all amateurs. Stations may be worked once per band, per mode, for point credit.

EXCHANGE:
Delaware stations give QSO number, RS(T), and county. All others give report and ARRL section, province, or country.

FREQUENCIES:
CW: 3560, 7060, 14060, 21060, 28160
Phone: 3975, 7275, 14325, 21425, 28650
VHF: 50.110, 146.52
Novices: 3710, 7120, 21120, 28160
Phone on even hours, CW on odd hours.

SCORING:
Delaware stations score 1 point per QSO times number of sections, provinces, or countries. Outside Delaware, score 5 points per Delaware QSO times 1 for one county worked, 3 for two counties worked, or 5 for all three counties worked (New Castle, Kent, Sussex).

AWARDS:
Awards will be given out, as well as certificates for working all three Delaware counties.

LOGS:
Mailing deadline is January 15, 1976; include an SASE for results or W-DEL Award. Logs should be sent to John Low K3YHR, 11 Scottfield Dr., Newark DE 19713.

MILWAUKEE AREA CHAPTER OF THE 10-X NET QSO PARTY

Starts: 0001 GMT Saturday, December 6
Ends: 2400 GMT Sunday, December 14

Stations may be worked on all bands, once on each band. All contacts must be made using voice transmission.

EXCHANGE:
IDs, QSO number, Milwaukee Chapter number, 10-X number, and state.

SCORING:
Score one point for each initial contact, 1 extra point if on 10 meters, 1 extra point if station is a 10-X member, or 1 extra point if station is in Wisconsin. Score 2 points if person contacting is a Milwaukee Chapter member. Thus, one QSO could score 6 points total.

AWARDS:
Plaques to the first and second place winners. Certificates for the next two highest scorers in each state (3rd and 4th).

LOGS:
Logs must list exchange information plus date, time and band. All logs must be received by WA9TSG no later than January 15, 1976. All logs will remain the property of the Milwaukee Area Chap. of the 10-X net. Send logs to: Joseph F. Williams WA9TSG, 114 East Brown Street, Milwaukee WI 53212.

TELEPHONE PIONEER QSO PARTY

Starts: 1900 GMT Saturday, December 6
Ends: 0500 GMT Sunday, December 7

The Stanley S. Holmes Chapter Ham Pioneers invite all Telephone Pioneer ham radio operators to participate in contacting as many individual members in as many different chapters as possible. All bands may be used and the same station may be worked on more than one band. General call is "CQ TELEPHONE PIONEERS" or "CQ TP" on CW.

EXCHANGE:
RS(T), number, chapter name and number.

SCORING:
One point for each completed exchange and one point for each different chapter contacted.

SUGGESTED FREQUENCIES (± 20 kHz):
Phone: 3965, 7206, 14295, 21365,

Robert Baker WA1SCX, 34 White Pine Drive, Littleton MA 01460

28676, 50.1 to 50.25 & 144.275 to 145.5
CW: 3565, 7065, 14065, 21065
REPORTING:
Send log extract showing date, time, station worked, chapter name and number, contact number — postmarked not later than January 10, 1976 — and send to: Gene Przebieglec, Stanley S. Holmes Chapter No. 55, Telephone Pioneers of America, 100 Central Avenue, Kearny NJ 07032.

TOPS CW CONTEST
Starts: 1800 GMT Saturday, December 6
Ends: 1800 GMT Sunday, December 7

All contacts must be made between 3.5 and 3.6 MHz. On CW, leave the low end of the band for DX. General call is CQ QMF.
SCORING:
Contacts with own country count one point — each call area in W/K, UA, etc.; VE/VO and VK counts as a separate country. Contacts with stations in same continent count two points. Contacts with stations in other continents count five points. Total score is total points times number of prefixes worked (prefixes same as for WPX).
LOGS:
State if single or multi-operator and mail logs not later than January 31, 1976 to: Peter Lumb G3IRM, Tops CW Club Contest Manager, 14 Linton Gardens, Bury Saint Edmunds, Suffolk IP33 2DZ, England.

ARRL 10 METER CONTEST
Starts: 1200 GMT Saturday, December 13
Ends: 2359 GMT Sunday, December 14

The contest is open to all amateurs worldwide. All QSOs must take place on 10 meters and OSCAR QSOs are valid. Each station can be worked on phone-to-phone and CW-to-CW, and anyone can work anyone. All CW contacts must be made between 28.0 and 28.5 MHz, unless working through OSCAR. When operating on 10 meters, please avoid the OSCAR downlink frequencies.
CLASSES:
Entries will be classified as either single or multiple operator stations. Multiple transmitter stations are not allowed.
EXCHANGE:
All W/VE stations will send RS(T) and state or province. Others will send RS(T) and consecutive serial number starting with 001. Stations that are not land based will send RS(T) and ITU Region (1,2 or 3). The District of Columbia is counted as part of Maryland.
SCORING:
Each completed QSO counts 2 points, or 4 points if with a W or K novice. The multiplier is the sum of the total number of states, Canadian call areas (max. 9), ARRL Countries (not US or Canada), and ITU regions from non-land based stations. Final score is the sum of the QSO points times the total multiplier.
AWARDS:
A certificate will be awarded to the highest scoring single operator station in each section, Canadian call area, and foreign country. Region awards for non-land based stations, and awards for multi-operator and Novice stations will be issued if warranted.
FORMS:
It is suggested that contest forms be obtained before the contest from ARRL, 225 Main St., Newington CT 06111; include an SASE. Check sheets are not required but a penalty of 3 additional contacts will be made for each duplicate contact.
These rules were taken from last year's contest; for complete rules see the November issue of QST.

HA5 — WW CONTEST
Starts: 0000 GMT Sunday, December 28
Ends: 2400 GMT Sunday, December 28

The full 24 hours may be used on all bands/modes. Classes (sections) include: single op, multi-op, and SWL. General call is WW TEST DE . . .
EXCHANGE:
RS(T) and ITU zone number.
SCORING:
Contacts within own continent count 1 point, between continents 3, with HA/HG5 stations 4, and 5 points with the special HA5 prefix. Multiplier is the number of different ITU zones.
AWARDS:
Certificates to the top scoring stations in each category, in each country.
LOGS:
Send usual log data, summary sheet, and signed declaration to: BRAL Contest Committee, PO Box 214, Budapest 134, HUNGARY.

NOSTALGIA RADIO EXCHANGE
Starts: 1900Z Saturday, January 3
Ends: 0500Z Sunday, January 4
Starts: 1900Z Sunday, January 4
Ends: 0500Z Monday, January 5

Nostalgia Radio Exchange is sponsored by the Southeast Amateur Radio Club, Cleveland, Ohio, and is open to all. The object is to have civilized fun in working as many interesting persons and old rigs with your interesting old rig (a Nostalgia Rig is any gear built since 1945 but at least ten years old — an advantage, but not required in the Exchange).
EXCHANGE:
Your name, RST, state/foreign country, transmitter type (home brew: Use P.A. tube, i.e., "807"). The same station may be worked on each mode on each band. No AM phone below 28 MHz. CW call "CQ NX," phone call "CQ Exchange."
FREQUENCIES:
1810 and CW up 70 kHz from low band edges; phone 3910, 7280, 14280, 21380, 28580; Novice 3720, 7120, 21120, 28120.
SCORING:
To score, add the numbers of different transmitters, states and countries for each band. Multiply by total number of QSOs. Multiply that total by Nostalgia Multiplier: total years old of your transmitter and receiver (if transceiver, multiply years old by 2). Different transmitter and receiver combinations may be used by one station: Figure scores separately for each and combine for total score.
AWARDS:
Achievement Certificates for persons scoring 150,000 or more, plus Special Citations for unusual circumstances as determined by the committee (like working Antarctica with an AT-1). Send logs, comments, anecdotes, and legal sized SASE to Southeast Amateur Radio Club, c/o W8KAJ, 2386 Queenston Road, Cleveland Heights OH 44118.

Don't forget to send early for your contest logs and summary sheets for the ARRL VHF Sweepstakes (Jan 3 - 4) and the ARRL DX Competition (Feb 7-8 and 21-22). Include a large SASE with sufficient postage. Send requests to: ARRL, 225 Main Street, Newington CT 06111.

CALENDAR

Dec 5 - 7	ARRL 160 Meter Contest*
Dec 6 - 7	Delaware QSO Party
Dec 6 - 7	Telephone Pioneer QSO Party
Dec 6 - 7	TOPS CW Contest
Dec 6 - 14	Milwaukee Area Chap. 10-X Net QSO Party
Dec 7	TU2 Competition
Dec 13 - 14	ARRL 10 Meter Contest
Dec 28	HA5-WW Contest
Dec 31	Straight Key Night
Jan 3 - 4	ARRL VHF Sweepstakes
Jan 10 - 11	ARRL CD Party — CW
Jan 17 - 18	ARRL CD Party — Phone
Jan 24 - 25	Simulated Emergency Test
Feb 7 - 8	ARRL DX Competition — Phone
Feb 21 - 22	ARRL DX Competition — CW
Apr 3 - 4	Florida QSO Party
May 1 - 2	Helvetia 22 Contest (H22)

* = described in last issue

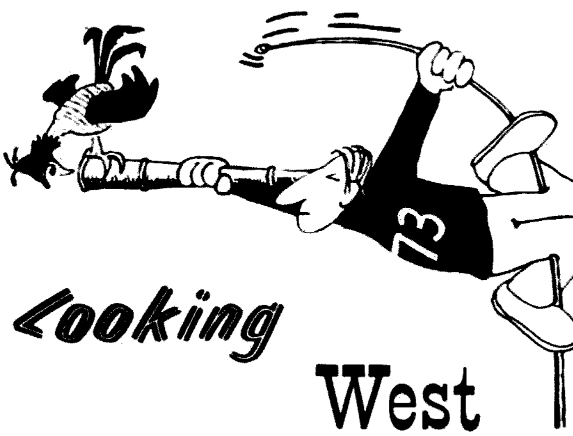

Looking West

Bill Pasternak WA6ITF
14725 Titus St. #4
Panorama City CA 91402

In case you had not noticed, 1975 has fast drawn to an end, and to say that it has been a most interesting year for amateur radio would be an understatement. Nationally, the controversy brought about by Docket 20282 and the profound long reaching effect that the final report and order would have on the future of the amateur service has stirred the thinking of just about all of us. It has made many of us realize that the key to our survival and growth is recognition and total acceptance by the general public. It is still my sincere feeling that you cannot legislate people into the amateur radio community; through the proper education, though, we can instill the necessary desire and interest for them to take their own initiative to join our ranks – because becoming a "ham" holds the kind of challenge they find necessary in their lives. In '75 we saw the dawning of this new era first with the Hawaii Ham Forum, a radio program produced by members of the Hawaiian Amateur Community and directed specifically toward the non-amateur listener. As the realization that it would inevitably be the general public that would decide the destiny of amateur radio took hold, and that the best way to reach the public was through the broadcast media, the ARRL leadership here in Southern California was quick to act by appointing Lenore Kingston Jensen W6NAZ (a person whose credentials for the job would take a column in itself) to the post of liaison with the broadcast media in Southern California. Lenore is the type of person one feels honored to know is a member of our amateur radio community.

We have come a long way in '75, and challenges still await us in the coming year. Such a challenge is the future of a statewide FM coordinating body known as the California Amateur Relay Council. If you are a regular reader of LW, then you are aware of the fact that CARC is in the process of total metamorphosis. Racked with dissension from within the organization itself, charges that the organization was not responsive to the needs of northern repeater interests, and the fact that a split was developing between repeater and non-repeater interests, the organization took on the job of revamping its structure in order to try in some way to placate all concerned. A blue-ribbon committee was formed, given time to study all related matters, and, as reported in an earlier column, voted in October as to which direction to take. We will have a report on their decision next month.

In the interim, however, another organization is in the process of getting itself together in Northern California. As the Southern California Repeater Association was formed a few years ago when local leaders here came to the realization that the existing statewide body was not at that time serving their needs and interests, so it appears that similar interests in the north are following in the same direction with the announcement that the Northern Amateur Relay Council (or NARC for short) had been the outcome of a meeting held September 20th in Sacramento. Hosted by the Mt. Vaca Radio Club, this meeting was well attended by some 200 delegates of both repeater and remote base interest. It was agreed by the vast majority that some form of regional "home rule" organization could best be responsive to the needs of area FMers, and a group of eight area amateurs plus one alternate was chosen to represent the organization and help get it started.

Well, the year end "box scores" are in regarding repeater operation in the Southland, and here, directly from the latest SCRA Newsletter, is where we stand. Two meters is bulging at the seams with 61 systems currently sanctioned to the repeater sub-band, plus (unfortunately) 5 systems whose owners do not feel that coordination is necessary. Of the 61 coordinated systems, only 15 are listed as private, with the rest being considered "open." Six of these systems are listed as having autopatch facilities, but it is best to check with a given system (as to whether this facility is open to all or limited to specific individuals) before going "gung-ho" on such a repeater. The channel pair of 146.10-.70 is reserved for RTTY repeater operations.

Now, here is the best part: Nine of the above are inverted or "California Plan" split-split systems, and no one to date has come running to the SCRA Technical committee yelling foul! It looks as though this method of using the 15 kHz tertiary channels is meeting with good success, much to the credit of Burt K6OQK and Bob WB6JPI, who thought it up, and to the SCRA, for accepting this radical departure from tradition and having the wisdom to give something new a chance to be experimented with. Of late, reports have been reaching me that other areas of the country have been considering going this route rather than following the Texas Plan (that does not invert the tertiaries). As one who had the sometimes dubious honor of being among the first to try a split-split repeater according to the Texas Plan (doing so at a time before the Texas Plan was known as the Texas Plan), and now witnessing firsthand the results of the Southern California Inverted Plan, I only wish that I had been the one to dream this one up myself. If you reside in a megalopolis such as ours, with all your standard 30 kHz channels allocated and in use, might I suggest that you give serious consideration to what has been accomplished here? The inverting of the split-splits is a reality and, moreover, it is a success. Simply said, it works. A letter to the SCRA at PO Box 2606, Culver City CA 90230 (and marked to the attention of Tech Committee Vice Chairman Bob Thornberg WB6JPI) will probably bring you as much information on this topic as is available to date.

Now, can you believe 30 systems already sanctioned to 220 MHz with the number still increasing? Now remember that a sanction does not mean a machine is in daily operation, but it does stipulate that the amateur receiving said sanction has but 90 days to get his system operational (and within SCRA guidelines). All these systems must be on the air by January, or the channel assignments will be up for grabs. My personal opinion is that most if not all will make the deadline – thereby making L.A. and vicinity a veritable beehive of 220 activity.

My Clegg FM-21 is crystalled for five of the listed systems, plus 223.5 simplex. Of these five, two are in regular operation, with WR6AER accounting for the bulk of the activity. While two out of five might not seem like a lot, in terms of percentages it comes to 40% of my crystals being useful. A directional antenna on 220 would do wonders for the other 60% (they're all for operational systems) as well as my simplex range. As for the latter, there is a darn nice bunch of people operating 223.5 here in the San Fernando Valley, and most of the time when the 220 radio is on, it monitors that frequency. If I am home, a short call on that channel will usually get a response. If I am not home, well, the phone number is 786-6829 and Sharon is adept at taking messages . . . hi.

So there is the total: 91 sanctioned repeaters, one special events sanction and five unsanctioned or renegade repeaters – all within the "jurisdictional boundaries" of the SCRA (and currently nine more applications pending for coordination to two meters). I find it all but mind-boggling how FM has grown in the three years since we arrived here. Grown? No, skyrocketed!

There are still no purely open 450 systems in the area yet, but rumors persist that this situation will soon be changing. Activity on that band is such that a non-area ham might have trouble believing that so much activity could be packed so tightly into one band. I didn't, until I was given a firsthand demonstration about a year ago. The technological level of some of the 450 remotes and repeaters is

probably the most sophisticated in the world — a credit to the inventiveness of the amateur radio community.

Alas, this leaves us with but one veritable wasteland, six meters. While there is a fine open repeater system, WA6UJS, located atop Mt. Wilson, with coverage that rivals anything else in the area other than WR6ABE (2 meters, also atop Mt. Wilson), it is rare that I hear any activity on that system. I understand that there is another system down San Diego way, but I cannot hear it from my location. Going to the low end, aside from a few AM nets and a minute amount of SSB activity, there is little to speak of. Even when the band was "open" during "E" and "F2" skip this summer, there was not much activity to be noted. Oh, the "Big Gun" DXers were there, but that was it. No new blood — that was the six meter scene about five years ago. Even with the availability of multi-channel amateur FM transceivers, six meters seems to be going in the opposite direction from 144, 220 and 450. Days can go by without hearing anything but the few AM nets. A sad commentary on a great band!

I hate to see 6 just go down the tubes. Oh, I hear the same old reason given time after time: TVI. But let me pose a question. Aside from the TVI potential of the repeater transmitter itself, and this can be located in an area isolated from TV viewers, how much TVI can you give from your car? Do you really think someone is going to run out of his home to complain as you sit waiting for the traffic light to change? Sound silly? So is the old TVI excuse for avoiding six! It might have held some merit back in the pre-FM repeater days, but a lot has changed over the past few years.

Now there is rumbling coming from Washington that the television industry wants the band back to create a channel 1 TV station for educational purposes. Do we sit idly by and wait for the day when the FCC says, "Pack up your Gonsets, guys, it's not your band any longer" or do we start now to populate this band in numbers that will avert its eventual loss? Don't think it can't happen; remember the Class E CB thing of a few months ago? A good motto for the next 12 months might be "Save 6 in '76" or something along those lines. It's a darn good band with tremendous growth potential. Let's not lose it.

The mention of television brings us to the question of the media and our relationship with it. We have two things to report this month, one older news and bad, the other new and very good. First to the former. If you have not already heard, the production team of Spelling-Goldberg (the company that brings you the police action drama show *SWAT*) is in the process of readying an episode of that program that puts the amateur radio community into a rather unfavorable light. It seems that the "bad guy" in the particular episode is a "ham" who uses his radios to befuddle the police. It seems that Mr. Spelling is not willing to make very many concessions if any as to dialogue (something that as a producer he has the artistic privilege to handle in any way he sees fit). Therefore, until the episode airs on ABC, no one is exactly sure of what will be contained therein, and though I hate to seem pessimistic, I doubt if a letter writing campaign will do much to keep it off the air. This may be one where we lose the battle, and can only hope for minor consequences as a result. If the content of the show is such as to be deemed slanderous to the amateur radio community, then legal action can only be taken after the program airs. In the interim, we must take a wait-and-see attitude; we have no other option. The only thing that bothers me is that with the multitude of amateurs within all aspects of the media, and a good possibility of there being one or two employed by this production company, why didn't they put out feelers for an episode technical advisor from within the Los Angeles amateur community? Why is it so rare that the media ever consults us when they are going to picture us? These are the questions and barriers that we must work to overcome, and this is what good public relations is all about.

Now that we have expounded on the dark side, let's get to something good. Educating the younger members of our society, the children, is one way to insure our future growth. If we can instill in them a feeling that amateur radio is a challenge of the future, then half of our problem is solved. Reaching these little people through children's programming is one way, since the reason that children watch TV is that they enjoy it. One of the top rated children's programs is the Saturday morning show *Shazam/Isis*, a two part program actually with two separate programs in a one hour slot. (Consult your local TV listings.) I am pleased to be able to report that Art Nadel W6TZY has written a script for *Isis* titled "No Trumpets, No Drums" that is now in production and will be aired in the near future. It will, I am told, depict amateur radio to our younger generation in a proper light — and one that they will be able to understand. Since no air date is available yet, watch your local TV listings for the title. If it's as good as Lenore says, and I never doubt her word, it may be the first step toward a new generation of amateur operators.

And with this, we begin another year. At this point a personal note to you all: Thank you for your ongoing Xmas gift — the letters of support and encouragement that arrive throughout the year. It's these letters that let me know what you want to hear about, and I consider you all an important part of this ongoing monthly endeavor. It is you who make Looking West possible; you are as much a part of it as I am.

To each of you individually, Sharon and I send our warmest wishes for a most joyous of holiday seasons and hope that all the dreams you have for the future come true in '76.

Save Six
•
in
Seventy-Six

LETTERS

from page 15

getting my money for that interesting journal, also.

I enjoy every feature of *73*, even your editorials. Some of them I agree with and some not. But mostly for. You have a lot of common sense in your arguments and I like that very much. You can quote me.

Francis K. Cassels W1GVA/1
Calais ME

CAN YOU BLAME US?

In the September issue of *73*, Mr. Glenn Knight commented on my piece in July's "Be My Guest." Mr. Knight puts forth a strong argument that many people are interested in amateur radio but are unable to find a willing ham to show them the right way. As much as I hate to admit it, Mr. Knight is correct. Too many hams don't really care if the ranks are growing smaller. Many hams don't care much about their hobby in general anymore, and that is a shame.

I wrote my article on public relations for those people who are willing to go out and grab the chance to interest people in amateur radio. I wrote the article from my own experience and I was lucky enough to have several hams around that would bend over backwards to help. But I do agree with Mr. Knight that there are far too many hams around that are prejudiced and turned off to those who aren't yet well versed in the ways of hamdom.

Hams in general are prejudiced. They are prejudiced against lower classed hams, higher classed hams, hams that work a different mode, hams that have different interests. Almost all hams are against CB and I guess I'm no exception. We see them getting something for nothing and then using it wrong — while we work for what we have. How can you blame us?

Nonetheless, CBers are our biggest reservoir of prospective amateurs, and we should be showing them the way. Mr. Knight says that CBers talk to anyone and that fact only will turn people the CB way. We, as amateurs, who enjoy our hobby, have to get out and be friendly and quit being so damned snobbish. Such a hard thing to do for some, but it might be the key to keeping our hobby around.

Some hams don't realize why I'm putting on such a push for enrollment. It is the simple fact that the ITU conference, to be held in 1979, will say yes or no to the existence of amateur radio in the US. The FCC is in fact trying to help through Docket 20282, but I do believe they're not quite on course with their suggestions. There must be enough amateurs to show a need for existence. As usual, nobody looks at what we are doing but instead how many of us there are doing it.

To save amateur radio we must increase our numbers. If all we have to do to do that is be friendly and give others our knowledge, let's do it!

Mark D. Poss WB8URH
1365 Brookside Dr.
Fostoria OH 44830

TRIPPING

I am planning to make a trip around the world after I graduate from college in December. I would like to know if there are any amateurs in Japan, Israel, Scandinavia, Western Europe, the British Isles, or French Canada who read *73* and who would like a visitor from the United States. I'm 22 years old, a linguistics major who speaks several languages, and am very interested in making contact with amateurs in the countries mentioned that I plan to visit. All replies will be appreciated, and answered.

Jon Forrest WB6EDM
21414 Oe La Osa St.
Woodland Hills CA 91364

PROGRAM OFFER

With regard to "Say, OM, Are You A Computer?" (October, 1975, p. 109), the program's writer makes the following offer:

He will send a punched paper tape copy or a listing of the program to anyone who writes him to ask for it, and includes a dollar to cover his costs ($2.00 for both). His address is:

Robert Snider, Jr.
57 Hawxhurst Road
Huntington NY 11743

Frank Kelly W2IAT
Huntington NY

BAMBOO DX

I built the "El Cheapo Superbeam" of WA6NLQ's, which was in the June 1975 issue, and it is working very well — I got my first DX across the ocean on it first day of use.

I had trouble finding 13 foot bamboo poles, but 9 foot bamboo and 2 x 2 lumber worked fine.

Charles McBride VE3GYT
Grimsby Ont

PUSHING HAM

I just wanted to say "thank you." Reason? I've been involved with CB (please read further) for about 11 years. After reading *73 Magazine* for about 7 months now, the philosophy of international communication finally got through my thick head. I own a small CB business and am starting to lose a little business — but gaining in cleaning the air waves. By this I mean I've started on my way to becoming a Novice. Thanks again! I push ham every chance I get now!

George Weed
Vineland NJ

OL' KEN

IDF has done it again w/his HW-7 article! Ol' Ken's writing is purely delicious! Bet you edit it very little.

Encouraging trend now in NW is more code classes and more requests for info on becoming hams!

Anxiously awaiting my copy of new VHF Antenna Handbook . . .

Clair L. Mackie W7IJY
Everett WA

INVALUABLE

After several years of your magazine and many interesting and informative articles, I decided that it was time to write and let you know that your magazine is read and appreciated. The articles on surplus and antennas have been invaluable guides to operating on a rather meager hobby budget. The FM articles have been interesting and encouraging enough to get this confirmed HF brass pounder to consider putting a rig on Two Meter FM.

Thank you very much for your time and keep up the good work with the magazine.

Robin D. Huckaby WB4GKI
Norcross GA

CAUTION

I am writing in regards to Sig Peterson's letter in the October 1975 issue relating to the HP-45 "timer." You should caution your readers that it is a counter and not a timer. The timing has not been calibrated by HP and therefore runs at an uncalibrated speed. My HP-45, for instance, is six seconds slow over a ten minute period.

J. Bradley Flippin K6HPR
San Diego CA

IF ONE GETS IN. . .

How about running more articles on inside antennas for some of us who live in one story complexes with a small attic and no floor? No outside antennas are allowed. In fact, no wires are visible; everything is underground.

Also, how about some articles on TVI filters for 6 meters? This was a busy band, but today it's practically dead. We're blessed with channel 2. Everyone is going 2m FM and 50 MHz is a graveyard. I understand some Dallas outfit has petitioned the FCC to use 50 MHz for a TV station. If one gets in, that's it. We can't afford to lose any frequencies.

Sherman Goldman K8LUY
Southfield MI

CASH SUPPORT

Enclosed is $26. Please renew my subscription to *73 Magazine* for three years and give me a one year charter subscription to *BYTE*.

I'm parting with all this cash to support your editorial policies of telling it like it is and providing the most ads and articles each month.

I also share your enthusiasm for microprocessors and spent part of this morning ordering parts for my system. I'm basing my system on the MCS6502, an 8 bit NMOS chip just made available by MOS Technology, Inc., Norristown PA — for the bargain price of $25. They plan on introducing a combination 64X8 RAM, 1024X8 ROM, 16 bit I/O chip this fall — also for about $25. Their ROM portion is not field programmable, but will be supplied factory coded with either a teletype input monitor or a keyboard input, CRT display output monitor. The monitor programs will allow you to enter programs from your keyboard on TTY, then execute them. To my knowledge, this is the least expensive way of getting a system up and running. The MCS6502 is comparable to the Intel 8080 and the Motorola M6800.

I have some news of interest for 8080 users. In mid-August, Intel introduced the 8080A, a redesigned 8080 with full TTL drive capability on all outputs for $150. At the same time, they announced a number of new LSI support chips, including:

- 8708 — 1024X8 erasable PROM 450ns;
- 8224 — clock generator/driver;
- 8228 — system controller/bus driver;
- 8214 — interrupt controller;
- 8255 — programmable peripheral interface (24 bits of I/O);
- 8251 — teletype interface chip (5 level or 8 level).

For $250, Intel distributors (Cramer) will sell you a 13 chip set including an 8080A and one each of the above chips. I ordered a set when they were first announced for a company project, but it wasn't scheduled for delivery until mid-October. These new chips allowed me to design a complete system, including 2KX8 PROM, 1KX8 RAM, CPU and I/O, on a single 5.5" x 7" printed circuit board.

I'm also designing a 12KX8 RAM board using 4KX1 dynamic RAMs. These currently go for $23 each, but by the end of next year I expect they'll sell for ½ of that. Refresh requirements can be handled automatically with about 10 ICs with minimal interference with the microprocessor.

Jack Regula WA3YGJ
Conshohocken PA

SUGGESTION

If there is a ham who has a General ticket (or above) and wants to help others, here is a suggestion.

Many Novices and non-hams enjoy listening to the voice bands. If a General ham would give instruction to the Novices and non-hams, it would be great! A General class ticket is very important to me and other Novices, I'm sure.

Carl Rubin WN2UOQ
Chappaqua NY

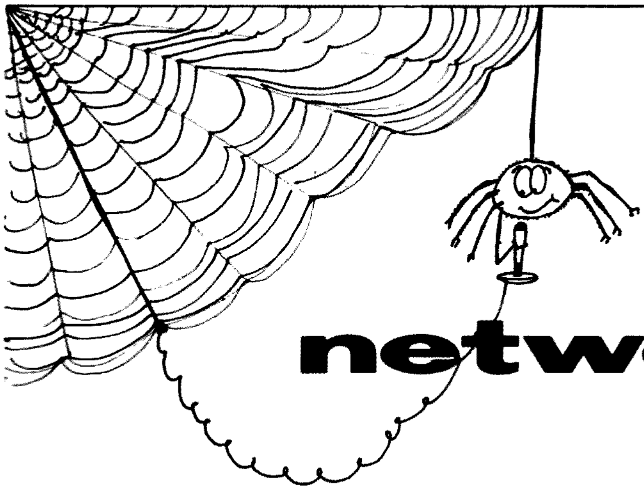

networks

E. H. Barnett WB0IIX
Route 1
Ashland, Missouri 65010

NOTE: Times and Days are given in GMT.

NET TYPE

I – Information
R – Rag Chew
S – Service
T – Traffic

My wife and I had a nice vacation last month. While driving through some pretty isolated areas of Wyoming, we both found it comforting to check into the Independent County Hunter's Net (14.333 MHz all day). We were in places where it was 50 to 60 miles to the nearest service station and CB was useless in case of emergency. Viva la difference! Apparently the news travels slowly from Washington — people in the mountain states were driving at whatever speed they wanted to.

My thanks to WA5RON, WB0LSI, K4FRX, WB8TFP, K4HXW, K8YFX and others who dropped me a note telling of their nets. They are included in this edition.

Service Area	Net Type	Name	Time	Days	Freq	Mode
INTERCONTINENTAL						
	S	Intercontinental Mission Radio	0100	Mon--Fri	14280	USB
	R	Saltminers	1000	Daily	7285	USB
Western Hemisphere	S	Intercontinental Mission Radio	1800	Mon--Sat	14280	USB
NATIONWIDE						
United States	S	Independent County Hunters	Cont.	Cont.	14333	LSB
United States	S	Interstate R-V Service	0100	Tu--Sat	14308	LSB
United States	R	Corn Cob Net	1100	Daily	7274	LSB
United States	S	Interstate R-V Service	1700	Mon--Fri	14308	LSB
REGIONAL						
East United States	S	R-V Service	0000	Tu--Sat	3895	LSB
East United States	S	R-V Service	1230	Daily	7278	LSB
East United States	S	R-V Service	1300	Sun	3963	LSB
Northern Mid U.S.	T	Piconet	1300	Daily	3925	LSB
West United States	S	R-V Service	1800	Mon--Fri	7263	LSB
Northern Mid U.S.	T	Piconet	1800	Daily	3925	LSB
STATEWIDE						
NC	T	North Carolina SBN	0030	Daily	3938	LSB
FL	T	Florida SBN	1100	Mon--Sat	3940	LSB
FL	R	Knights of the KC	1130	Mon--Fri	3910	LSB
MN	T	Midwest CW Net	1800	Sat	3725	CW
MN	T	MSSN	2300	Mon--Fri	3710	CW
SC	T	South Carolina SBN	2300	Daily	3915	LSB

Clocks...

by
Larry Kahaner WB2NEL
4259 Bedford Ave.
Brooklyn NY 11229

A clock is a device that emits pulses at designated intervals. The pulses, either logic 0 or 1, can be used to synchronize different parts of a circuit so they function or turn on at the same time . . .

All right already: what's a clock? That's what many readers have asked, and this article not only answers the question but shows how to build one and incorporate it into a complete IC experimenting unit. And to satisfy those who have asked for simple projects to show IC logic "even if they don't do much," we have that, too.

First, a clock is a device that emits pulses at designated intervals. The pulses, either logic 0 or 1, can be used to synchronize different parts of a circuit so they function or turn on at the same time. For instance, we may have five flip flops in one circuit and want them to activate together. By connecting them to the same clock we are assured that they operate simultaneously.

If we have a clock that pulses at one second intervals and it drives a seven segment LED so that numbers are counted, we have a clock, in the everyday sense.

555 IC Chip

The heart of the clock is the 555 IC chip shown in Fig. 1. The internal circuitry is complex. The equivalent circuit made of discrete components takes over twenty transistors, half a dozen resistors and a few diodes. It is a linear device.

It has many uses, but the two most common ones are astable operation, where it continues to emit pulses, and monostable, or "one shot," where it acts as a timer and pulses once at a predetermined time.

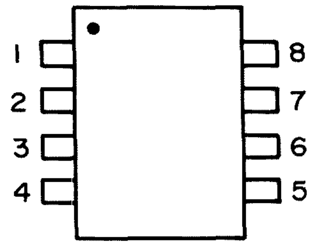

Fig. 1. 555 timer. 1 – ground; 2 – trigger; 3 – output; 4 – reset; 5 – control voltage; 6 – threshold; 7 – discharge; 8 – Vcc.

The circuit for the one shot timer is shown in Fig. 2.

Pin 2 is the trigger and a pulse under 1/3 Vcc will set an internal flip flop. This flip flop releases the short circuit on C_1 imposed via pin 6. This in turn drives the output (pin 3) high. The capacitor now starts to charge (remember τ = RC) and when it reaches 2/3 Vcc the flip flop is reset by a comparator and the output goes low, as the capacitor discharges quickly. 2/3 Vcc is the threshold voltage.

A very good feature is that once triggered, the clock will not retrigger until the elapsed time is up. Then it can be manually reset. However, if we do want to retrigger it during the timing cycle, all we

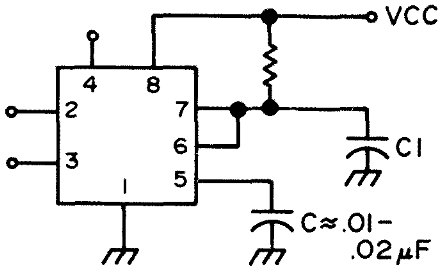

Fig. 2. One shot timer.

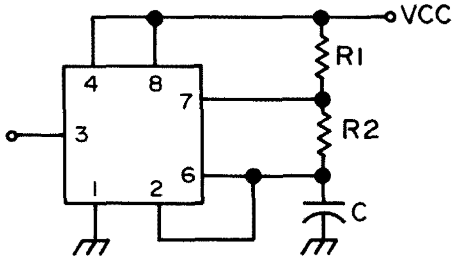

Fig. 3. Astable operation.

Really Simplified!

have to do is pulse both pin 2 and 4 at the same time and the cycle will start again.

To prevent accidental retriggering during a timing cycle, pin 4 should be connected to Vcc to insure that it cannot go low. The equation for timing is approximately $t = RC_1$. R is given in Ohms and C_1 is in farads. With the proper values, timing from many hours to hundredths of a second can be obtained. (For an application see "The Alligator Squelcher," *73*, Sept. 75.)

The astable operation is the mode we have been discussing most of the time. The circuit is shown in Fig. 3.

It is similar to the one shot except that pins 2 and 6 are connected together. That's right; it triggers itself. The capacitor charges to 2/3 Vcc, then discharges. When it discharges to 1/3 Vcc, the clock triggers via pin 2 and another cycle commences. 1/3 Vcc is known as the trigger voltage. The cycle is dependent upon R_1, R_2 and C. The frequency is equal to $1.4/(R_1 + 2R_2)$ C. The graph makes it easy (Fig. 4).

Building the Clock

As you can see from Fig. 3, there is not much to it. After I breadboarded it, I just took the whole thing and mounted it inside the same chassis as the 5 volt power supply. Parts layout is not critical (I always wanted to say that), and since the clock draws so little current, I leave it connected to the supply output all the time.

To obtain variable speeds two choices are available. One is to vary the resistors, the other is to vary the capacitor. Because I had no potentiometers of the correct value, I decided to leave $R_1 + 2R_2$ constant at 10 megohms and use a rotary switch to select a 1, .1, .01 or .001 uF capacitor. This gives speeds of .1, 1, 10 or 100 Hz. For a precision clock, keep adjusting until the proper speed is reached while checking against a known reliable source like an oscilloscope or counter.

If an LED is connected to the output (you may need a dropping resistor of 150 Ohms or so depending upon your LED), and the speed is slow enough, you will see that it stays on longer than it blinks. This is correct. As mentioned before, the output is high during the timing cycle. However, the change is the important thing and that occurs at the proper time according to the RC ratio. The logic state in the "between times" does not really matter.

Continued

No excuses for non-IC experimenting will be valid after this article is digested . . .

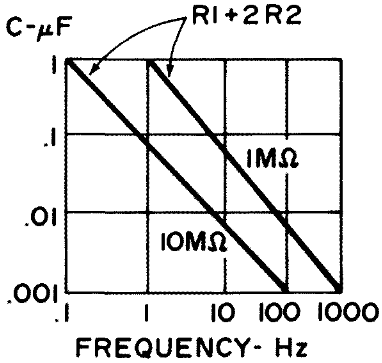

Fig. 4. Values of R_1, R_2 and C versus frequency.

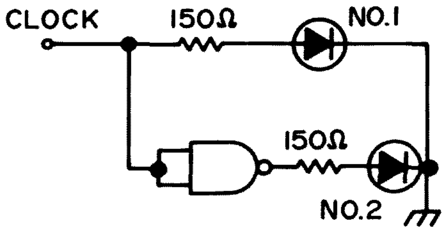

Fig. 5. 7400 IC blinker.

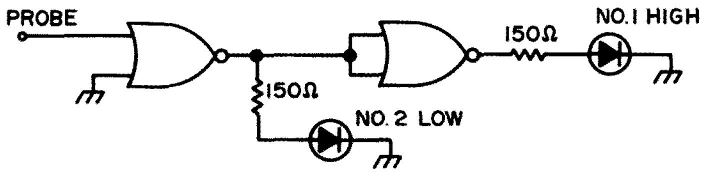

Fig. 6. Logic probe using NOR gates.

The Permanent IC Breadboard

When experimenting with ICs, we can find ourselves in a wire jungle. The innocuous 14 pin chip can strangle us in its spidery tentacles. The permanent breadboard will save us. It is simple to build and convenient to use. No excuses for non-IC experimenting will be valid after this article is digested.

Start with a perfboard. Allow about 4" x 3" for each socket that you want. Since most ICs are 16 pins or less, I decided to design the system around these holders. Punch a hole in the board and mount the holder. Since the holders will be subject to lots of wear and tear, I spread a thin film of epoxy around each one to hold it fast. Then, on each side mount the type of solderless terminals you prefer. I used the spring type terminals. They are amazingly sturdy and the spring can keep a large number of wires very tight. Solder each terminal to its respective socket lug and you are in business.

I also mounted two LEDs to use as testers and logic tracers. If you plan to work with chips of more than 16 pins, mount them. Keep in mind that a 16 pin socket can also be used for two 8 pin chips. Mount as many sockets as you want. A TO holder may prove helpful. Feel free to customize.

For a deluxe model, mount the power supply and clock in a chassis, but instead of a metal cover, use the breadboard. Mount terminals for Vcc, ground and clock output, and another for clock speeds, and voila! A self contained IC experimenter. All you will ever need in one unit.

As your chip collection grows, a safe way of storage is needed. Try putting the chips in a soft piece of styrofoam. The pins remain undamaged and notations can be made on the styrofoam with a pen. Sometimes chips come with "house numbers" instead of the usual 7400, 7402, etc. The notations keep track of these.

Don't Do Much

Readers have asked for simple schematics that teach logic even if they don't do too much. Now that the permanent breadboard is built, we can get started.

The 7400 chips are good ones to play with. Buy a few. Especially get the 7400 NAND gates, 7402 NOR gates, 7408 AND gates and the 7432 OR gate chips. This will give you the four basic gates to experiment with.

In Fig. 5 we have a circuit for a blinker. When the clock output is high the #1 LED lights. LED #2 sees low logic because the NAND gate makes its 1,1 input into a 0 output. When the clock emits a low, LED #1 stays off but LED #2 sees a high and lights. Cute, heh?

Fig. 6 is a logic probe. It's a long time favorite circuit and has been around for quite a while. (Dec. 74, *73* has another one.) It's a useful tool and *does* do much. You may want to make a permanent one. I include it because it's a good example of logic. When the probe contacts a high, LED #1 lights. For a low, LED #2 lights. The logic is simple to trace. It is similar to the blinker but it will not load down the circuit under test because the LEDs are not "seen" directly. Add this to the power supply, clock and breadboard, and you are all set.

Fig. 7 is a comparator. (Did you really think I would mention it before and not explain it now?) Its job is to compare two or more signals and if they are the same logic, give us a logic 1 output. Its logic is simple to follow. Keep in mind that it compares any similar signal 0 or 1. Instead of the NAND gates you can use the 7404 NOT gate chip. Try your hand at designing a comparator to handle more than two inputs using the two-input comparator as a building block.

If you have not already done so, try building a few of the flip flops that you have seen in the last article. They will work just as easily as these simple ones. From personal experience, I have had better luck with ICs than tubes or transistors. They are easier to trace and troubleshoot and either "work or don't work." There is usually very little optimizing and fudging as in tubes or biasing problems that you encounter in transistor circuits. And it's so much fun when the majority of your projects need only a 5 volt supply.

Please continue to write and tell us what you would like to see "explained." You are our input. ■

Fig. 7. Two input comparator.

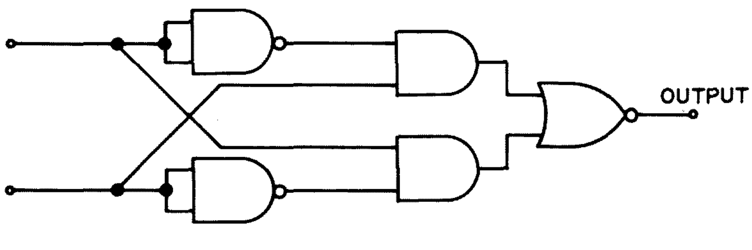

De-Strain Your Ham-M

by
Louis Berman K6BW
1020 Laguna Avenue
Burlingame CA 94010

For the older model Ham-M Rotator, the final result is superior to the switching system presently employed in the newer model. The objective in both instances is to ease the torsional strain imposed on the rotating shaft and antenna resulting from the immediate engagement of the brake when power is removed from the rotor in the original version. This is done by momentarily delaying the brake action. The simple wiring change, together with the following instructions, should encourage even the lowest beginner to make the modification.

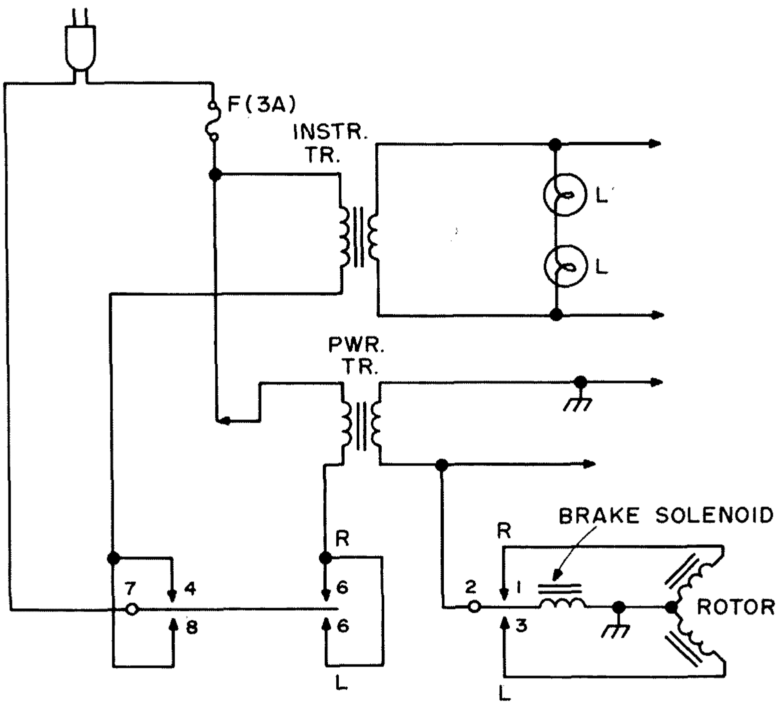

Fig. 1. Before modification.

Modification Instructions

1) Lift off bakelite housing by unscrewing the four bottom-mounting feet. Detach meter panel by removing the four screws holding it to the bottom plate. Disconnect the two meter leads. This frees the mounted bakelite component board from the meter panel bracket. Remove the meter. Unclip the two panel lamps. The control lever switch contacts are now fully exposed.

2) Screw back into position the bare panel bracket and re-mount the bakelite housing in place.

3) Drill a small hole in the bakelite panel 1 1/8" from each end of the panel front and 5/8" from the bottom edge. Pass the drill straight through each hole in a *direct line* and drill a hole in the meter panel bracket. Remove the bakelite housing and the metal bracket.

4) Enlarge the left hole in the metal panel to mount the push-button switch with the two contacts in a horizontal line. Enlarge the right hole in the metal panel to mount the miniature DPDT switch oriented so that the bat handle moves horizontally.

5) Disconnect the ac input lead from contact 7 of the lever control switch. Add about three inches and re-route the lead so that it passes to the right of the 3A fuse. Solder this lead to the left-hand contact of the push-button switch. (Control lever contacts are numbered from 1 to 8 in a clockwise direction.) Solder a wire between the left contact of the push-button switch to *both* middle contacts of the DPDT switch.

6) Remove the instrument transformer lead from contact 4 of the lever switch and solder it to the right-hand contact of the push-button switch. Leave enough lax in the wire to provide working space between the meter panel bracket and the control lever.

7) Solder a wire between the right contact of the push-button switch and one of the "on" contacts of the DPDT switch (brake out position I).

8) Disconnect the power transformer lead from contact 6 of the lever switch and solder it to the other "on" contact of the DPDT switch (brake out position I). The other primary lead of the power transformer goes to the 3A fuse, as shown in the diagram.

9) Lever contacts 4, 8, 6, 7 are not used. Contacts 1, 2, 3 remain to actuate the rotor; contact 2 also completes the brake solenoid winding circuit.

10) Check the wiring carefully and remount all parts except the bakelite housing.

Test Operations

1) Push-button momentary switch lights lamps and monitors the compass reading.

2) Double pole double throw switch is left in the "off" (brake in II) position when the unit is not in use; panel lights are off and brake is engaged to secure the rotor.

3) To rotate the antenna, snap the DPDT switch to the "on" (brake out I) position; panel lights are on and brake solenoid is actuated, releasing the brake. Moving the control lever to the left or right energizes the rotor and permits free CW or CCW rotation.

4) Release control lever just prior to reaching intended compass position, permitting the unit to coast to a full stop. Snap DPDT switch to the "off" (brake in II) position to lock the rotor and turn off the panel lights.

Housing Removal

The following steps permit lifting the bakelite housing vertically (as before):

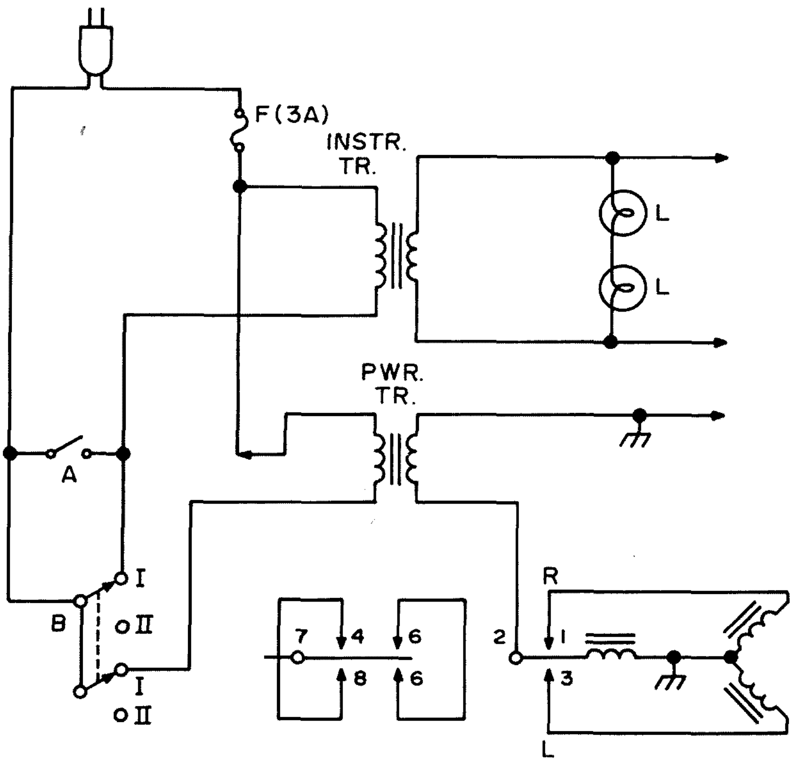

Fig. 2. A — Push-button momentary switch; B — Miniature double pole, double throw switch; I — Brake out; II — Brake in.

1) Enlarge the left hole in the bakelite housing to admit a removable hollow shaft extender to fit snugly over the button of the push-button switch. I used an old TV hollow shaft slotted at the open end, with a small knob at the other end.

2) Drill out a horizontal slit in the bakelite housing at the right-hand hole wide enough to admit a removable lever. I used a one inch length of 3/16" copper tubing, slightly compressed at one end to fit over the bat handle and flattened at the other end to facilitate lever movement.

3) Impress the following labels over the appropriate holes on the horizontal ledge above the fluting: "meter-push on" and "brake-in out" (or "brake-out in", whichever the case may be).

4) As an added refinement, mount an octal socket in the rear on one inch standoffs and permanently connect the output leads to the pins of the octal socket. The cable leads are soldered to the appropriate pins on an octal plug for easy removal of the cable.

In summary, to reverse an old adage, the entire modification is easier done than said! ■

Hot Carbon

by
John M. Murray W1BNN
4 Kenwood Circle
Bloomfield CT 06002

There sitting on the curbstone was the most beautiful telephone microphone I'd ever seen. Soon it was under my coat, as I rapidly pedaled away . . .

During World War II our military had an expression that was widely used: "to liberate" meant to help yourself, particularly if the stuff was enemy property. All too often, if not most of the time, anything attractive that belonged to someone else, enemy or not, was subject to liberation if the owner was not around or happened to be looking the other way.

I started rather young, long before the war. Someone said there's a bit of larceny in all of us. Probably W. C. Fields. Anyhow, I was coming home from school one afternoon on my bicycle when I saw a great cloud of dust rise up near our apartment building in Washington, D. C. Wreckers had just leveled an old house, which had come crashing down.

There sitting on the curbstone was the most beautiful telephone microphone I'd ever seen. It was one of the old vertical jobs with the U-hook for the receiver earpiece. A lovely bright green cord was coiled up and hung over the mouthpiece. What in the world was it doing there, I wondered.

This was no occasion to elaborately reason out that the workmen might have left it for the telephone company to pick up. It was much easier to assume they would soon fling it in their dump trucks, which were rapidly piling high with trash. Such waste would be awful.

I took a furtive look in all directions. Suddenly the beautiful microphone was no longer on the curbstone. It was under my coat, as I rapidly pedaled away.

Thus, that mike with the bright green cord began its journey into history.

A couple of years passed. My father's engineering career involved our moving several times. But wherever we went, that mike sat on the table near my radio apparatus, where I could look at it and admire it. Soon I had my ham ticket and found myself president of the Phillips Academy, Andover, Radio Club – NU1SW.

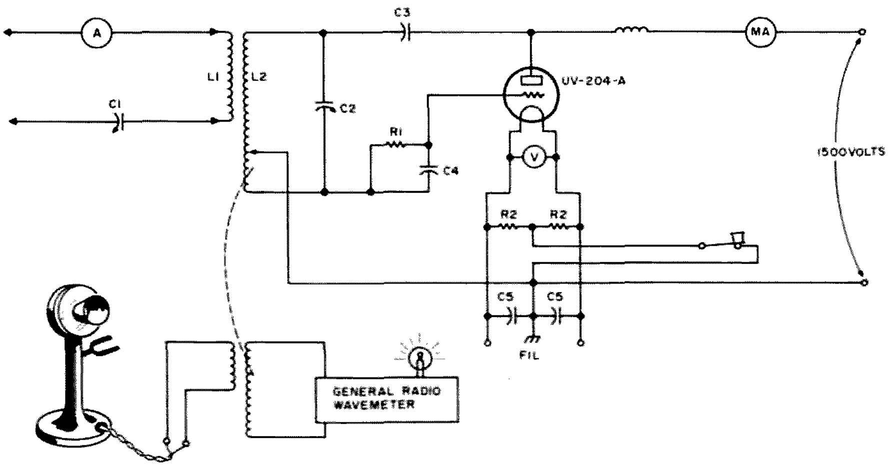

Fig. 1. 1927 Hartley circuit DX machine at NU1SW. For anyone who wishes to build this magnificent transmitter, we will be pleased to forward a list of component values and recommended hardware. Simply send us $5.00 and a copy of the New York Times *for Sunday, April 1, 1956. You will receive the information in a plain wrapper.*

(We had no official international prefixes in those days. We all had accepted an ARRL system: N signified North America and U, the United States.)

Naturally, my beautiful mike sat proudly but silently next to the CW transmitter. NU1SW's 204-A, in a self-excited Hartley circuit, had become a big deal on the 40 meter band, with about 30 countries to our credit by mid-winter, 1927. But this was all night-time stuff, mostly to be had in the wee hours of the morning. With 1,500 volts RAC on the plate at 190 mills, we were putting out enough rf in the antenna to draw a one half inch spark off the feeder wire with a lead pencil. That was a dandy way of checking the output in those days.

Well, snow was falling one Saturday afternoon, and a howling New England gale was slapping our antenna halyards against the 60-foot poles. The ham shack was nice and warm, with a banked wood fire in the iron stove. Everything was fine, but the 40 meter band was dead – just about completely, except for WIZ, which was on Cape Cod, I believe, a commercial CW outfit at the edge of our band. WIZ would send a trilogy of Vs, sign his call – and then repeat ad nauseam. This was too much!

Why not try 20 meters, which was getting very popular? We had never operated there before – or even listened on that band. My friend Gerald Marcuse EG2NM (E for Europe, G for Great Britain) had been broadcasting with voice to Australia and New Zealand around 32 meters for several years – with grand success.

It didn't take long to halve the 40 meter inductance for the rig and to change coils in our General Radio wavemeter. The capacitance of the tank coil condenser (variable capacitor to you young laddies) was fortunately okay to resonate the oscillator coil on 20, so that the wavemeter indicator bulb lit up like a stockbroker's eyes when he smells money.

The wavelength readout, as you guys might call it, was 20.9, or 14.354 MCS – Quite legitimate in those days. Antenna? It was much too cold to go outside and fiddle around. I had that one figured out, too. Hopefully. With indoor space limited to just about 16 feet in any direction, I soon had a copper wire strung up at about that length and coupled with a 250 uF condenser to a four turn coil adjacent to the plate side of the oscillator tank. Oh, boy! The contraption loaded up just fine. Backing off a bit with the antenna coil, the plate mills were steady at about 190, with the 204-A running as cool as a cucumber with the key down. Probably 125 Watts output. This was it – maybe!

Our Phillips Academy Radio Club in 1925. Only four years earlier the first amateur radio signals had bridged the Atlantic and then spread out over the globe. Between 1925 and 1929, 1SW, first with no prefix, then with U, later with NU and finally with W, was known from New Zealand to Tokyo, from London to Capetown. The school faculty, including our "advisor," who never put foot in the shack to my knowledge, had us cased as a bunch of scientific freaks. It's good to know that the W1SW boys have been doing nicely in recent years, with a more enlightened group of schoolmarms hovering in the background.

Tuning over the band at 2:25 pm, I heard no signals. So I hit the key with a CQ, slow and steady – which was top style to snag DX. Then, flipping over to receive, there was only the gentle hiss of radio silence – until suddenly, as I moved the dial across the band, a very strong signal popped up, calling us. Probably a local, we thought, until he banged out his call: EG2AO. The call book gave his location as Eastbourne, on the channel coast of England, in Sussex. And daylight nearly all the way across! "Good afternoon, old man," he CW'd at me. "Your signal's fine business. Very steady RAC, almost PDC."

After I gave him his report, he continued, "Say, old man (I was 16 years old), your signal's the best yank ever heard here, nearly as strong as WIK (a 10 kilowatt commercial station on 20.2 meters)." We had a delightful QSO, winding up by his saying, "Am now reading you on the loudspeaker. Wonderful!"

As we signed off, I found myself staring at my beautiful microphone with the bright green cord. Why not? Why not try some voice on these guys?

Having no modulator of any sort, the only answer was to make up a crude version of FM known as loop modulation. In short order I'd rigged the mike inductively to the wavemeter, which I placed near the grid end of the tank coil. But not too near. There was lots of rf floating around.

A tentative "hello test" into the mike made the wavemeter bulb flutter in sync and the plate milliammeter wiggle a few mills upward. It was a durn good thing there were no television sets around.

My little liberated microphone was making history, at least for us . . .

Now to find a guinea pig for my experiment. A CQ DX on CW brought quick response from EB4BC in Antwerp, Belgium, who reported us loud and clear. "Sure, go ahead with fone," he replied, when I told him of my wild modulation device. So I let him have it at some length, watching the little wavemeter bulb twinkling with my words.

Then I switched back to him. "You talk too fast, old man. Don't understand English well. Please say a few words in French." Fortunately I was able to comply, which brought forth an excited "fine business," with many CW exclamation points.

For some time I continued with him, watching the snow coming down in great sheets outside. This fone business was really fascinating – one could say so much more in a given amount of time. Also, my little liberated microphone was making history, at least for us.

Several other club members had joined me by now. We were all amazed at our success and anxious to get some really big DX on voice. The Belgian station was about 3,400 miles away. What about Africa – or even Australia? So we sent out a CQ DX on voice, repeating several times. "Calling Africa or Australia," I sang into the mike. It was a superb bit of optimism that had us all but breaking up.

And then, suddenly, there was F0-A3Z in Capetown, South Africa, calling us. He was on CW with a good strong signal. We'd worked him before on 40 meters. He was about 7,800 miles away. Real DX.

"Your voice loud and clear in Capetown," he said. "Congratulations. First American amateur voice signal ever heard here! Glad to work you again."

We thanked him, giving his report – and explained what the modulator lash-up was. About then I noticed a thin wisp of blue

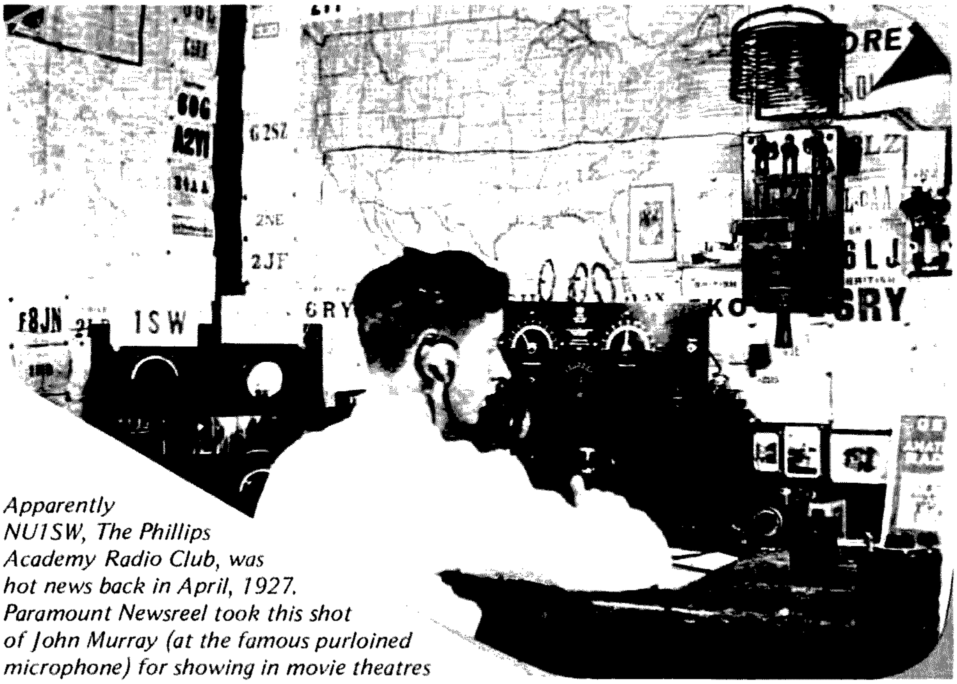

Apparently NU1SW, The Phillips Academy Radio Club, was hot news back in April, 1927. Paramount Newsreel took this shot of John Murray (at the famous purloined microphone) for showing in movie theatres nationally. To the right is a General Radio wavemeter. To the left is our low power transmitter, an 852 self-excited Meissner job. The cameraman insisted on hanging that crazy, obsolete switch and huge old RCA helix coil on the wall for "artistic effect." The double deck receiver lash-up has a honey coil job on top, which REL (Radio Engineering Laboratories) built especially for us, designed and donated by the late fabulous Henry B. Joy (W)8IA, 8IO, IAHM, KFKW, at that time president of the Packard Motor Car Company. Beneath it is an Aero regenerative receiver, both units battery operated, of course, since there were no ac powered sets in general use at that time.

smoke rising up from the microphone. Hurriedly we turned it back to him.

He reported everything fine up to the tail end of our transmission. "Bad distortion then set in," he said, "and your transmitting frequency really jumping around."

When I turned on once more to reply, blue smoke gushed from the mike. If this continued, the carbon grains would solidify in a ball. Quickly shutting off things, I moved the wavemeter a bit further away and detuned it slightly. Then, holding the mike by its shaft, I banged the daylights out of it on the bench.

"You're out of your mind," one of the boys said. "You're going to bust that thing."

So, I gave it a couple more whacks to show I knew what I was doing, then switched on the transmitter. "Calling F0-A3Z," I said. "Are you still there?"

"Lovely," he came back in his CW, "just lovely. But your voice much weaker now."

Then, all of a sudden, I felt as if someone had slammed me in the back of the head with a wet doormat. I began to ache all over and broke out in a cold sweat. Our 2nd op, Bob Schirmer, signed off fast with the South African. "You'd better get down to the infirmary right away," he said. "You're red as a beet."

It wasn't easy. However, he managed to help me walk the half mile and turned me over to the head nurse, Mrs. McKiver. She took one look and had me guided to a first floor bed. I never could have navigated the stairs and was by now, they reported later, not making any sense. My temperature was 105.4°. Emergency word got the school doctor on hand in jig time. He couldn't find anything wrong except my high temperature. Fortunately, it was not increasing.

Dr. Page was not noted for his sense of humor. A serious-minded little guy, he had three pet phobias: With no urging at all, he was ready at any given moment to preach on the vicious evils of tobacco, alcohol and coffee. Mrs. McKiver told me later that my greeting, when he showed up at my bedside, was hardly liable to put him in a good mood.

"Hello, sweetheart," I said. "You got a cigar on you?"

He surveyed me coldly for a moment, then raised an eyebrow. "You been drinking?"

"Sure, Doc, that's right. Maybe I need a cup of black coffee. No sugar, please."

He seemed to catch on, turning to Mrs. McKiver. "This boy's delirious. I've got to find out what he's been up to." He sat down on the edge of the bed, grasped my wrist and took out his watch. "What have you been doing today, young man?"

"Just some radio experiments you wouldn't understand – and floating out over the South Atlantic Ocean on a dreamy cloud, sweetheart, and going like hell – about 186,000 miles an hour."

Dr. Page looked at Mrs. McKiver. "Cool compresses on his forehead, please. I'll be back later." Then he prescribed a mild sedative.

In almost no time I was off in a fevered sleep which lasted for several hours. When I opened my eyes he was back again, shaking a thermometer. I was now just about normal – but with a jagged headache.

While I was floating around on my cloud, he'd been doing some hasty consulting with two other local doctors and had even called the Peter Bent Brigham Hospital in Boston. "Your trouble has something to do with radio currents," he said. "Somehow your system has absorbed a dangerous dose of these radio frequencies – giving you an artificial temperature which could have killed you if you'd gotten much more of it."

Then I explained the tests we'd made and the smoking microphone. His careful questioning brought out that my hand had been on portions of the unshielded microphone cord and also had held the shank of the telephone for an unduly long time. I'd just been overly exposed to a force I really didn't know anything about.

"I believe," he continued, "if you were about to come down with any of a number of different illnesses, you have killed the bugs, luckily not yourself to boot. A rise in temperature is nature's way of combatting unnatural intrusions and infections. In your case, there was only one bug involved, a radio bug – you. You'd better be more careful."

His advice was well taken. Dr. Page was a lot more thorough than I had imagined. It was not until several years later that the medical profession was experimenting with artificially induced radio frequency fevers to help in alleviating certain infections, notably pneumonia. A New York doctor told me that a government hospital had achieved significant results in this respect. Furthermore, it had been determined that there was a definite cut-off point beyond which the human system could not take these artificial fevers, somewhere in the neighborhood of 106°. Just a few more QSOs that afternoon would have cooked my goose, somewhat the same way that the microphone with the beautiful green cord got cooked.

So-o-o ... the next time you see a telephone with a beautiful green cord sitting on the curbstone, I suggest you leave it there. ■

All of a sudden, I felt as if someone had slammed me in the back of the head with a wet doormat . . .

Just a few more QSOs that afternoon would have cooked my goose, somewhat the same way that the microphone with the beautiful green cord got cooked . . .

EDITORIAL BY WAYNE GREEN

from page 3

to some of the restaurants . . . and chew the rag about ham radio on into the evenings, drop a line or call me and let me know. The group rate is a real bargain . . . runs about $150 or so for the week for the hotel and lift tickets, plus $50 for lessons, plus meals. You only live once, so get out and join a fun group for a week. Don't forget to bring an HT with 52 in it, even if you have to borrow one . . . and a charger too.

When you prepay for this deal you are eligible for reduced rate air fares. From Boston it cuts the cost from $276 RT to $207 . . . not bad. It'll probably give you a good cut from where you are too. Please let me know as soon as you can about this so I can make reservations. Call Wayne Green at 603-924-3873 or write c/o *73 Magazine.*

FCC – PROFOUND CHANGES

For the last few years I've felt that I was trying to shovel coal up a shute, to coin an expression which youngsters probably won't understand, having never watched coal being delivered to homes.

Amid cries from many amateurs not to rock the boat, you can't fight city hall, etc., I have been making what seemed to me to be futile suggestions about de-regulating amateur radio. When Walker wanted to go to even more license classes I sighed and filed my protest in an editorial. When Walker came up with the repeater rules I cried out in anguish and got together a group of amateurs to take the complaint to the boss: the FCC Commissioners. One of the most attentive ears at that hearing in January 1974 was now Chairman Wiley . . . who seemed to be enthusiastic about the idea of freeing amateur radio from restrictions so amateurs could invent and experiment without having to file in sixteen copies, complete with a six months or longer wait.

Whether my constant nudging had any effect or not, it does appear that we are going in the direction that I have been pushing . . . de-regulation . . . fewer license classes instead of more . . . getting rid of the growing welter of restrictions. I'm almost afraid to tell you the extent that this thing may be going. There is a strong movement deep within the FCC to set up basic guidelines . . . concepts, as it were . . . and then get rid of all the mass of rules.

Could you deal with a situation where all repeater rules were taken off? Where it was up to us as amateurs to make sure we have coordinating groups and that all repeaters abide by the coordinators? I wrote about this last month. This would mean that we could, if we wanted and the coordinators were in agreement, set up 10m repeaters . . . crossband repeaters . . . 20m to 220 MHz repeaters, etc. We could use timers on them, if we wanted . . . or not.

People generally tend to group in positive or negative reactions to change . . . the positive tend to view problems in terms of solutions . . . the negative in terms of why you just can't do things. I suspect that should these changes come to pass that we'll have a lot of reaction of both kinds . . . which will you be, a positive or a negative?

What about sub-bands? With the rules out the window we would be able to use any mode on any part of any band . . . yes, I understand that this is absolutely impossible . . . to answer the negatives. But perhaps with some basic guidelines it could work. It sure would be nice to be able to use SSTV and RTTY on the same frequency . . . I think they'll go together well . . . both can be stored on cassettes . . . both work via computers, etc.

Fundamental changes such as this will take a good deal of time. Let's see if we can't be a help by thinking and talking about how we could set up a minimum regulation system which we could live with. Do we need two or three classes of license? One thing I do know, if we de-regulate substantially this will mean a lot more for the ARRL to do, for we will need to have organization to get cooperation . . . and without cooperation we have only anarchy.

The FCC is not unaware of the impact of delays on licensing and they have in mind a little strategem which might help . . . they may make it so that once you pass your exam you can immediately go on the air with the higher privileges. This will make it possible to hear a Novice call in the Advanced band, which might be too much of a trauma for an official observer. If they do away with subbands and merely set power limits for the license classes, then this might not make much difference. I do kind of like the Japanese system of letting beginners operate on all bands limited to ten Watts.

One of the major reasons the FCC is having such a time catching up with the licenses, as you know, is the backlog of CB applications. Just put on more people to handle the pileup, you suggest? Any reasonable businessman would say the same thing . . . but the FCC is run by Congress and not by businessmen, and it appears that Congress could care less how much money the FCC is raking in with their CB licenses . . . and the profit is enormous on them since the *only* service they provide is a piece of paper. Congress is trying to cut down on the staff of the FCC, even though every dollar saved in salary will probably cut income by hundreds of dollars. That's the Congress we all know and love.

The Commission is afraid that if the CB licenses are not promptly processed that more and more CBers will just ignore the FCC and not bother to spend the $4. In point of fact there is little reason to spend the money and Congress would do well to take advantage of the naivete of the CBers and take their money as fast and quietly as they can.

COMPUTER BIZ IN PERSPECTIVE

One of the results of my work in the microcomputer field is that I have been in contact with most of the firms producing or developing gear for this field. It has been, to say the least, fascinating.

Amateurs who are feeling twinges of inferiority because they are unable to understand the jargon should take heart. The computer biz is brand new and no one has much of a jump on you. Don't let a few buzz words drive you under the table . . . when they say interface all they mean is that two things are connected together . . . it's all like that and with a little reading you'll be able to go to the next club meeting, sidle up to the resident computer type and watch with glee while a growing circle of eyes pop out at your infinite knowledge.

News flash: Microcomputers are so new that hardly anyone anywhere has them working yet. If you have a few drops of pioneering blood left in you after all that appliance operating, here is a field where you have an equal opportunity.

There are some good economic reasons for getting into the field . . . beyond the fun involved. In a year or so, when the pioneers in this field have systems that work, they are going to be able to sell and service them by the zillions. Experience has shown that once a home computer system is set up and running it gets used . . . a lot. Kids quickly get into playing games with it and soon put the old man to shame with innovative programming. The computer gets a lot more use than television.

The really big market for them will be for business. Every small business will be using one . . . and that means sales in the hundreds of thousands of units. This won't happen until the pioneers develop good working systems which are adapted to each type of business.

Most computers today are being sold directly by the manufacturers and I look for this system to fade out as truly large scale merchandising takes over. It will require local computer sales, programming and service stores to handle the growth. And who would be more logical to open such a store than the computer hobbyist of today?

. . .W2NSD/1

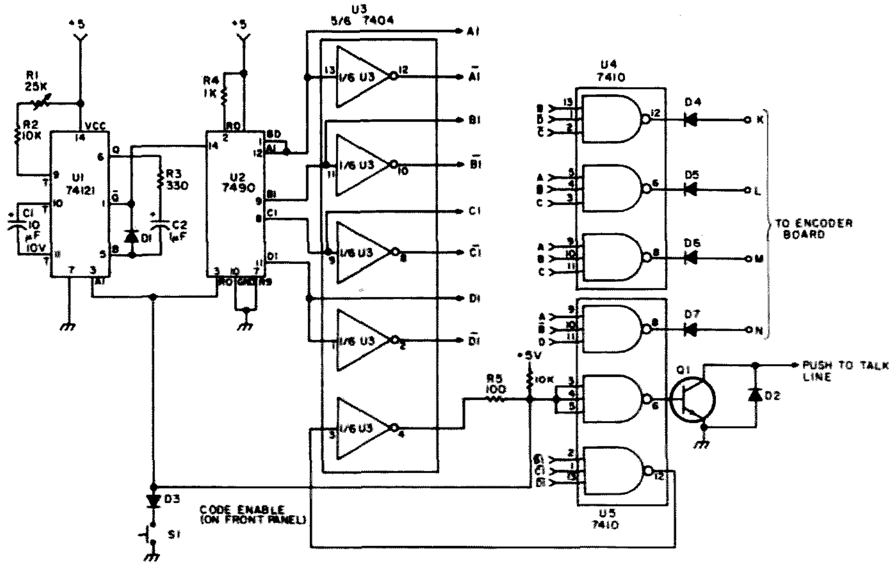

Fig. 1. Code access board schematic. D1-D7: 1N914; Q1: 2N3904 or equivalent. Note: Increase R2 for slower dial rate.

With many autopatch facilities being added to repeaters around the country, it is becoming easier to keep in touch from an automobile with friends, family or various public services. Expensive mobile phone or RCC services are no longer needed for casual conversations. Many amateurs are adding touchtone encoders to their rigs, either in the form of a single box which plugs in to the mike jack on the radio or more elaborate wired-in units which are permanently mounted to the dashboard. Making an autopatch is then easy – one only has to push one or several digits to access the dial tone, then dial a number. However, safeguards on many repeaters dictate that an access code be dialed within a certain time limit, and then the complete seven digit telephone number be dialed within another short time limit. If these times are not followed, the repeater controls will disconnect the circuit to avoid tying up a phone line.

To follow these prescribed limits while moving in heavy traffic is unwise. Many accidents or near misses have occurred when

The unit is a pleasure to use and also functions as a conversation piece, for every time it has been used, someone wants to know how I learned to let my fingers walk so fast through a touchtone pad . . .

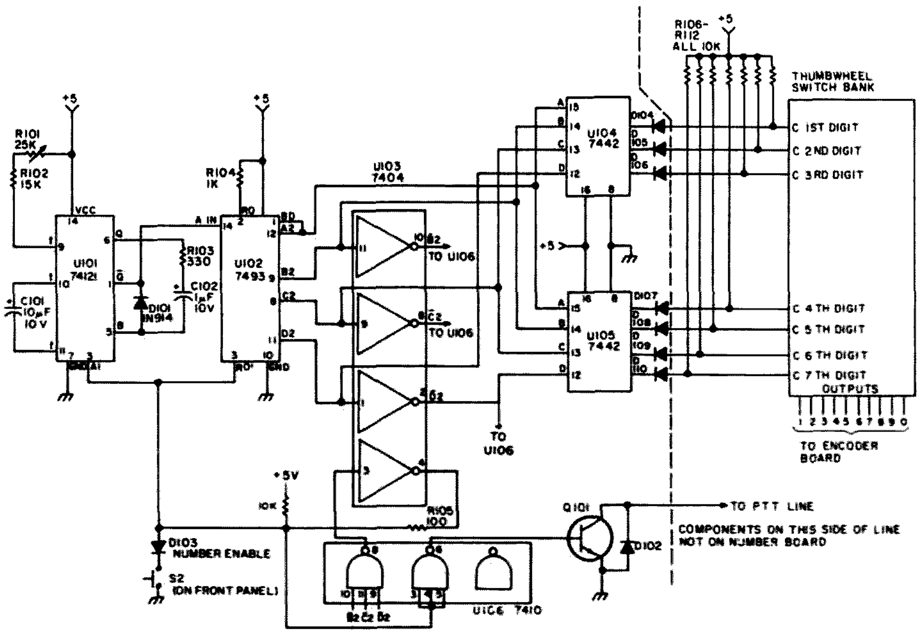

Fig. 2. Number counter board schematic. D101-D110: 1N914; Q101: 2N3904 or equivalent. Note: Increase R102 for slower dial rate.

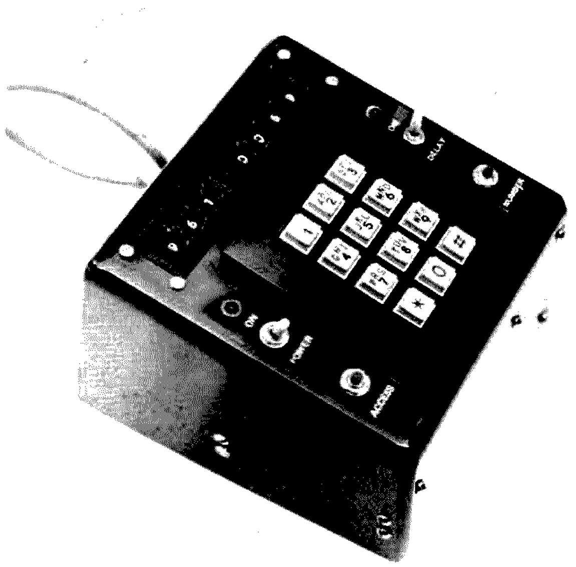

amateurs have tried to dial while in motion. In this area, a four digit access code must be dialed within 3 seconds and the complete 7 digit telephone number within 7 seconds. With these facts in mind, the pressure to get the sequence correct dictates that full attention be paid to the push-button switches and not to the road. Not wanting to pull over to the side in heavy rush hour traffic or on bumpy under-construction interstate highways in this area, I have invariably dialed a wrong number or had several near misses in the short time my attention was diverted.

I decided there must be an easier and safer way. It was relatively mundane to push one button without looking rather than concentrating on pushing several in proper sequence. After investigating the possibilities of surplus card dialers (there aren't any) and the feasibility of tape recorded touchtones (it's too hard to find the number), I decided to put my dubious education to work.

Obviously, some sort of ripple-through counter was needed for the repeater access code and number to be dialed. Some way of programming any required number was desired, along with an appropriate touchtone encoder to interface with the logic and transmitter. The repeaters in this area (there are five with autopatch) had several requirements, both technical and

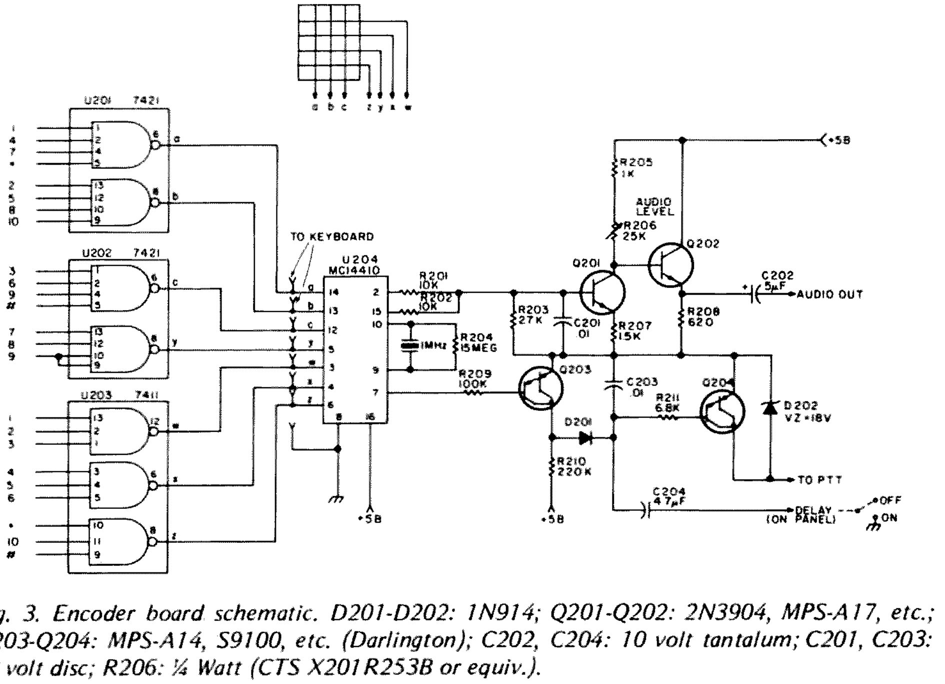

Fig. 3. Encoder board schematic. D201-D202: 1N914; Q201-Q202: 2N3904, MPS-A17, etc.; Q203-Q204: MPS-A14, S9100, etc. (Darlington); C202, C204: 10 volt tantalum; C201, C203: 50 volt disc; R206: ¼ Watt (CTS X201R253B or equiv.).

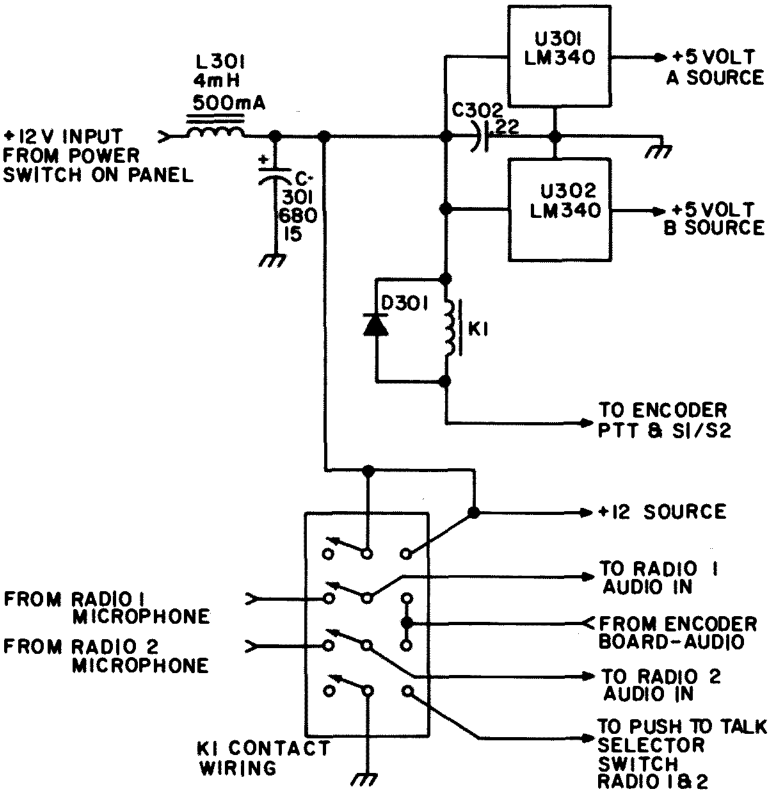

Fig. 4. Power supply and switching arrangement for 2 radios. D301: 1N914; K1: 4PDT 12 V Magnecraft W77CSX-2.

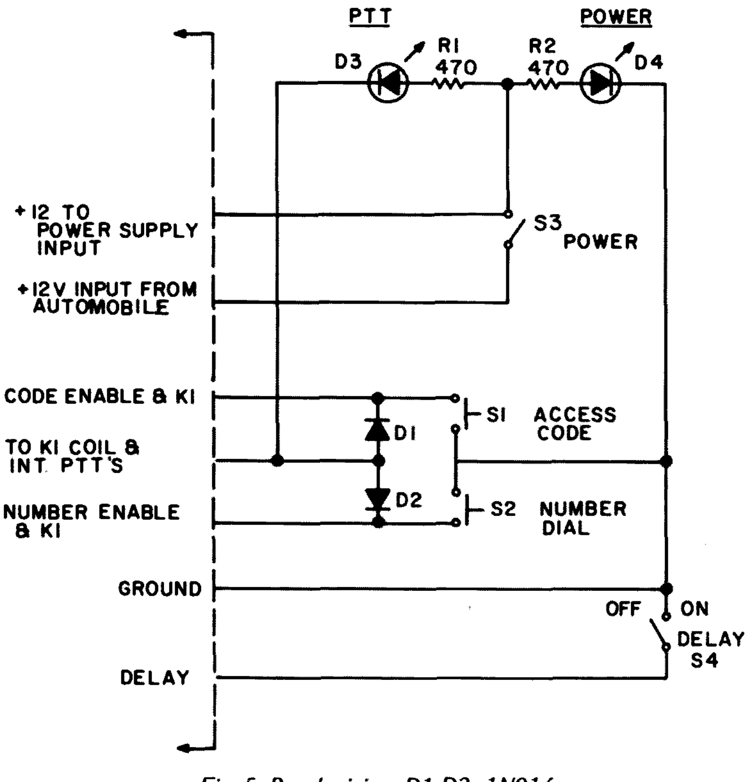

Fig. 5. Panel wiring. D1-D2: 1N914.

administrative: Deviation should be within certain limits (4-5 kHz); no clipping is allowed; the four digit access code must be dialed within 3 seconds, and the complete number within 7 seconds. The administrative procedures dictated that you: (1) Announce your call and intention to make an autopatch; (2) Let the repeater tail drop to reset the agc; (3) Key in the access code and let the transmitter drop for dial tone; and (4) Dial the number. To hang up, any button on the touchtone pad is depressed. Thus, one button to dial the entire 4 digit access code and one button to dial the seven digit number would be needed. Also, a switched ground on the push-to-talk line would be desirable to key the transmitter automatically. For proper impedance matching, the microphone circuits should disconnect and the encoder tones be fed to the audio input on the transmitter, instead of placing both in parallel. Since it would be desirable at times to have a manual entry, a 12 button keyboard should be included. The memory device could be ROMs, PROMs or such, but an easy interface was found to be thumbwheel switches, both for simplicity and to keep the project from getting away from me.

I finally devised the circuits of Figs. 1, 2, 3, 4 and 5. This gives both the capacity of letting the circuit dial the described number or enabling it to be done manually. Operating it is quite simple and takes about 2 to 3 seconds. The procedure is as follows: While stopped at a light or doing one-at-a-time as my attention to driving permits, I set up the telephone number on the thumbwheel switches as I want it. I then key the microphone and announce I am going to make an autopatch. After the repeater tail drops, I push the "access code" button. Immediately, the transmitter keys and the 4 digit access tones are transmitted. The transmitter goes off and I hear a dial tone. Then I push the "Number Dial" button and the same process takes place. The telephone line starts to ring as the transmitter unkeys. After the conversation, I manually depress the hang up number on the keyboard and clear the repeater. So far, the only time-consuming procedures have been the explanations to other hams who call me after the patch to find out how I can dial a number that fast.

The circuit is essentially two counters with separate enable switches. The first is comprised of U1 through U5 and is for the 4 digit access code. If your repeater has just one access digit, this circuit is not needed and you may just as easily use the keyboard. But if 2, 3 or 4 digits are needed for access, the K, L, M and N outputs of the code

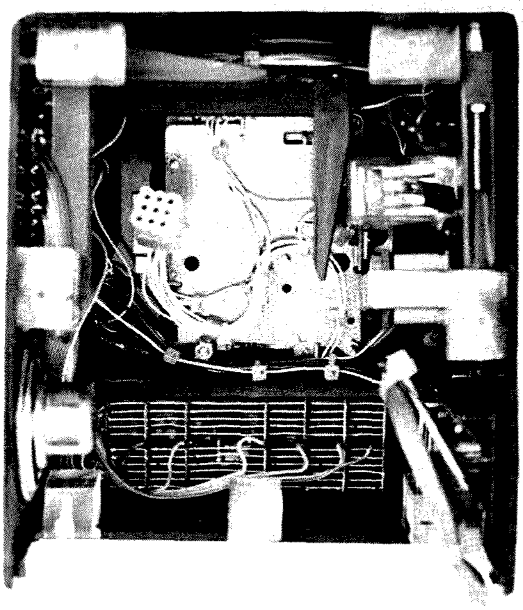
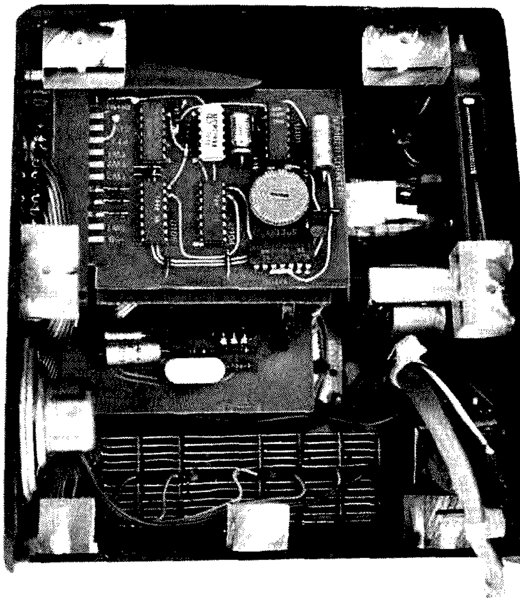

Two internal views.

access board may be easily programmed to accomplish this.

The second counter is similar, but counts higher for a 7 digit phone number and runs faster than the access code counter. Seven output pulses are fed to the seven thumbwheel switches, which "choose" an input on the tone encoder board. To the appropriate inputs are also connected the K, L, M and N outputs from the code access board.

To generate the access code, switch S1 is momentarily depressed. This keys the transmitter by grounding pins 3, 4 and 5 of U5, thus driving Q1 into saturation and grounding the internal push-to-talk line. Since the A1 pin of U1 is now low, output pulses appear at pin 1 and are fed to U2, which begins to count to 10. After 2 pulses from U1, pin 12 of U5 goes high and is inverted to a logical zero, holding U2 and U1 on so that S1 can be released. U2 provides a binary count from 0 to 9 and the A, B, C and D outputs are applied to inverters U4 and U5. These gates are wired in such a way as to provide a sequenced output of K, L, M and N with a space in between (see Table 1). After U2 counts to 9, it goes back to 0, which is the reset condition; pin 12 of U5 goes low and its inverter goes high, disabling U1 and holding U2 in the reset condition. As U1 and U2 are reset, the push-to-talk line is unkeyed and K1 returns to its unenergized

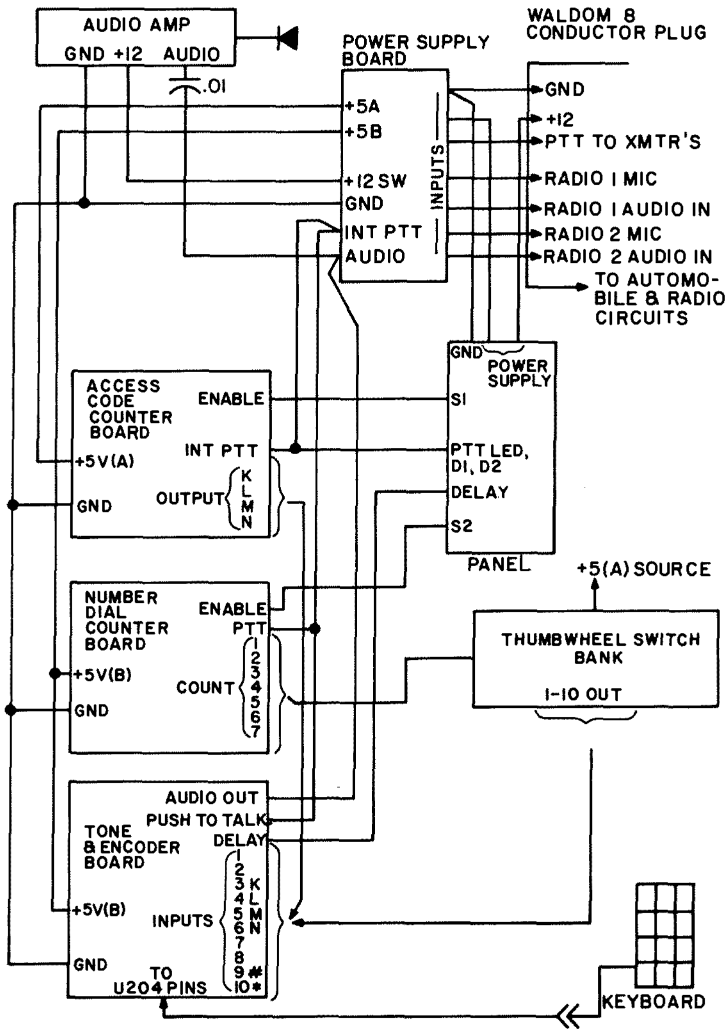

Fig. 6. Circuit board interconnection diagram.

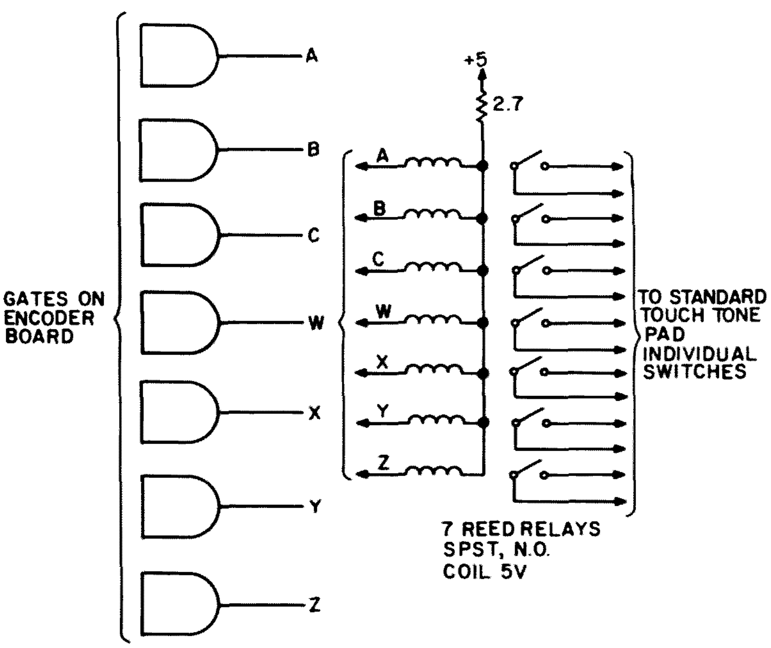

Fig. 7. Alternate method of generating tone. While quite cumbersome, this is a way to interface automatic circuitry to an existing pad. Outputs from reed relays are wired in parallel across existing pad switches.

Etched and drilled PC boards as shown in this article are currently available from M-Tech Engineering Inc., Box C, Springfield VA 22151.

position. Because many repeaters require the first digit to be held longer than the others, the K output has been made 2 clock pulses long.

The K, L, M and N outputs are all logical zeros and are hard wired into the appropriate numbers on the encoder board. If no code is required, or if it is just as simple to push a single access tone, the access code counter board may be completely omitted.

The speed of the sequenced K, L, M and N outputs may be adjusted by changing the speed of clock U1, which is easily accomplished by control R1. If some repeaters need a faster pulse than is available, the 10k resistor (R2) in series with this control may be reduced or omitted. Conversely, a higher value of R2 will produce a slower speed.

To generate the telephone number, a separate similar circuit is used. U102 is wired to U104 and U105 in such a way as to count to 16 (see Table 2). The B, C and D outputs are inverted and fed to a section of U106, which provides the same controls as on the code access board, resetting U102 and disabling U101. U104 and U105 provide 7 logical 0 outputs which are wired into the common terminal of each thumbwheel switch. These logical zeros are routed through the switches to the appropriate inputs on the encoder board. As in the code counter circuit, the speed is fully adjustable with control R101.

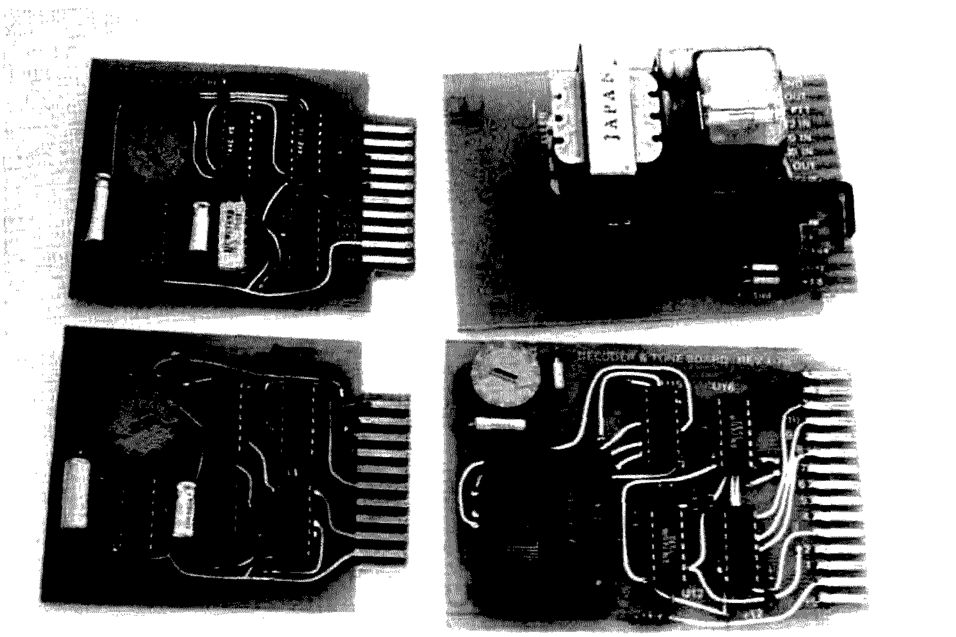

The four PC boards. Clockwise, from upper left: number counter, power supply, encoder, code access.

Count (U1)	Desired Condition	U2 Outputs D_1	C_1	B_1	A_1	U3 Outputs $\bar{D}_1$	$\bar{C}_1$	$\bar{B}_1$	$\bar{A}_1$	Reset Line R_0' and A_1	U4 and U5 Outputs K	L	M	N
0	RESET	0	0	0	0	1	1	1	1	1	1	1	1	1
1	PTT KEYED	0	0	0	1	1	1	1	0	1	1	1	1	1
2	K	0	0	1	0	1	1	0	1	0	0	1	1	1
3	K	0	0	1	1	1	1	0	0	0	0	1	1	1
4	SPACE	0	1	0	0	1	0	1	1	0	1	1	1	1
5	L	0	1	0	1	1	0	1	0	0	1	0	1	1
6	SPACE	0	1	1	0	1	0	0	1	0	1	1	1	1
7	M	0	1	1	1	1	0	0	0	0	1	1	0	1
8	SPACE	1	0	0	0	0	1	1	1	0	1	1	1	1
9	N	1	0	0	1	0	1	1	0	0	1	1	1	0

Table 1. Truth table, access code circuit. When S1 makes R_0' and A_1 low, U1 provides pulses to U2. At each pulse, U2 counts from 0 to 9 in binary form. The enable switch S1 is held for 2 counts. When the reset line goes low, S1 may be released. At the 9th count, U2 returns to 0, which is the reset condition. If S1 has been released, R_0' and A_1 go high, resetting U2 to 0 and disabling U1. As the sequence progresses, the K, L, M and N outputs go to logical 0s in turn.

It should be noted that either of the 2 enable switches, when depressed, will cause the transmitter to key and tones to be sent. If either of their respective clocks is running very fast, some means of monitoring the tones should be present. Too fast a clock rate will result in 2 or more sequences or "bursts" of tone to be sent as the enable switch is depressed and then not released fast enough. LED indicators are convenient (more about these later) but a small, pre-assembled $2.95 Radio Shack 100 mW amplifier was used in the prototype, with a small speaker. Muted tones are heard as the unit sequences. This is also handy in checking the overall operation every time it is used. Instead of using a volume control, 2 resistors were chosen to take the place of the suggested pot and wired in place to the foil side of the amplifier.

The tone and encoder circuitry consists of seven AND gates in 3 DIP packages, which drive the appropriate inputs on a fourth chip, U204. Fig. 3 shows the wiring. The K, L, M and N outputs of the access code board are wired (in that order) to the required numbers on the encoder board. Two or more access code boards may be paralleled for up to as many different access codes required. If your system uses 1, 2 or 3 digits for access, any one, two or three of these access code board outputs may be hard wired onto the proper pin of the tone and encoder board connector in parallel with the thumbwheel switch outputs. The transmitter in this case will stay on for the full count of four. Likewise, the 10 outputs from the thumbwheel switches are connected to their respective numbers, 1-10.

When one of the encoder board inputs goes low (i.e., is grounded), the outputs of the gates involved go low also, driving the proper frequency pins of U204. U204 is coupled through two 10k resistors to a buffer amplifier to provide approximately a 0.9 V P-P max output. This output may be varied by an audio level control for deviation adjustment. The circuit as shown has a 600 Ohm impedance. For transmitters with a high impedance mike input, a resistor of between 50k and 220k should be placed in series with the 5 uF output capacitor.

The tones generated are derived from a matrix. Rather than referring to the tone frequencies, the column headings have been designated a, b, c and the rows w, x, y and z (see Table 3). U204 was expressly designed for touchtone format and the circuit board layout is for this particular chip. It is a new

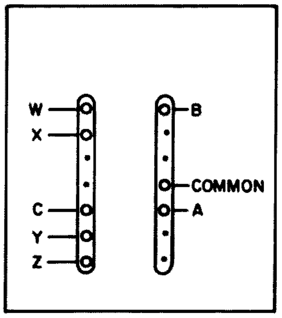

CHROMERICS EFS 21289 (SMALL) PAD CONNECTIONS

Row or Column Designator	U204 Pin Numbers
a	14
b	13
c	12
w	3
x	4
y	5
z	6
Common	Ground

Number	Designator	Pins U204
1	a w	14, 3
2	b w	13, 3
3	c w	12, 3
4	a x	14, 4
5	b x	13, 4
6	c x	12, 4
7	a y	14, 5
8	b y	13, 5
9	c y	12, 5
*	a z	14, 6
10	b z	13, 6
#	c z	12, 6

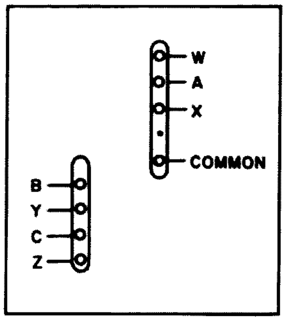

CHROMERICS EF20071 (LARGE) PAD CONNECTIONS

Fig. 8. Chromerics keyboard wiring and interface to U204.

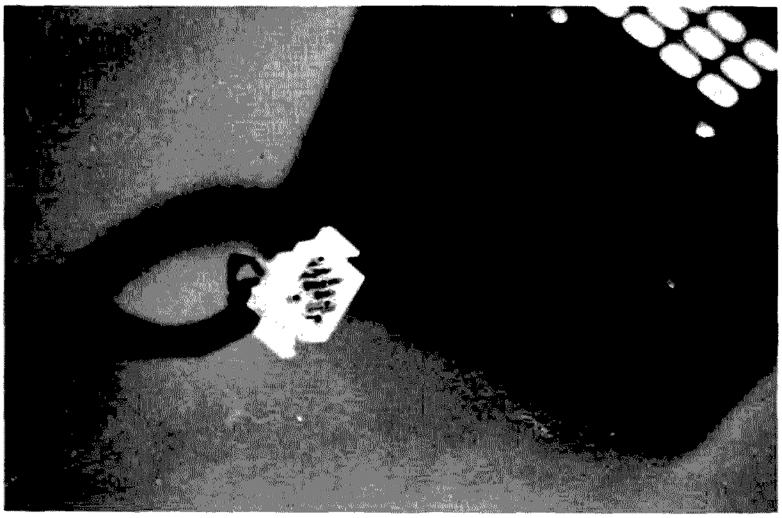

Close-up of Waldom connector plug discussed in text.

device by Motorola and is designated MC14410. A Microsystems International ME8913 touchtone generator IC was tried at first without much success, due to the rf from the transmitter. If you have experience dealing with this and have some on hand, a board layout is available from the author.

The Motorola chip is a CMOS, digitally compatible, free from rf interference, 16 pin DIP, requiring no special board layouts or bypassing. It requires only one extra part for operation – a 1 MHz crystal cut for 13 pF parallel mode.[1] Full 2 out of 7 or 2 out of 8 decoding is provided on-chip from the internal 1.0 MHz oscillator. With the 0.1% crystal specified, output frequency accuracy is ±0.2%, well within Bell System specifications. Voltage requirements are digitally compatible (+5 volts) and, for our application, the chip features a fast turn on and turn off time, as well as stable operation over wide temperature ranges (−40° to +85°C) for mobile use.

Due to the newness of this chip, some difficulty in obtaining one may be experienced. However, Motorola markets worldwide, and the MC14410 will be available from commercial vendors, and later even as surplus, at reasonable rates. The approximate price will be in the $10 to $15 range in single lots. This IC will not need bypassing or ferrite beads around the frequency pins as is required on the Microsystems chip.

The keyboard in the prototype is an EFS-21289 Chromerics[2]. Other Chromerics keyboards may be used if desired, but since the "feel factor" is miserable, a GTE Automatic Electric PK10 or PK11 keyboard, which is identical to the Western Electric pads, will be used on my next model. Any keyboard may be used, as long as it is wired to produce a valid tone. The 2 out of 7 contact arrangements in the keyboards used above are connected directly to the gate outputs or the frequency determining pins of U204. Any other type may easily be used. If one set of contacts closes at a time, for each number, an SPST arrangement is suitable with one side of all the switches grounded and the other side wired to each input.

An old, non-working WE or GTE pad may also be used if the oscillators have sustained damage. The switching arrangement is similar to the Chromerics one, in that two out of seven contacts close at one time. Damaged pads may be easily and inexpensively obtained at hamfests.

The power supply consists of a 4 mH indicator and capacitor to filter out alternator whine and other trash from the vehicle battery line, and two Fairchild 7805, LM340K or other 5 volt regulators capable of handling a total of 220 mA. These two regulated outputs, A and B, are wired to

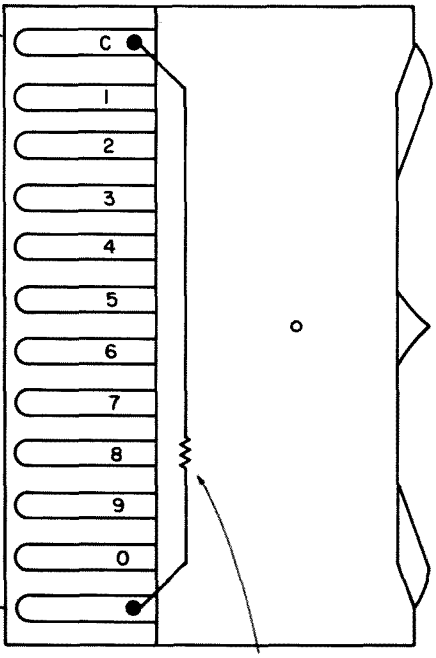

Fig. 9. Thumbwheel switch detail (side view showing method of wiring).

[1] Crystals made especially for this Motorola chip may be obtained from Manann Labs, 425 Main Street, Belton MO 64012 (816-331-5931), for $4.50 each in single quantities, or $2.20 each in lots of 6 and up. Order number ML18P, or ML18W (for wire leads).

[2] Chromerics, Inc., 77 Grand Dragon Court, Woburn MA 01801.

		U102 Outputs				U103 Outputs			Reset Line	Decimal Outputs of U104 and U105: U104										U105					
Count	Desired Condition	D_2	C_2	B_2	A_2	$\bar{D}_2$	$\bar{C}_2$	$\bar{B}_2$	R_0 and A_1	0	1	2	3	4	5	6	7	8	9	10	11	12	13	14	15
0	RESET	0	0	0	0	1	1	1	1	0	1	1	1	1	1	1	1	1	1	1	1	1	1	1	1
1	PTT KEYED	0	0	0	1	1	1	1	1	1	0	1	1	1	1	1	1	1	1	1	1	1	1	1	1
2	PTT KEYED	0	0	1	0	1	1	0	0	1	1	0	1	1	1	1	1	1	1	1	1	1	1	1	1
3	1st DIGIT	0	0	1	1	1	1	0	0	1	1	1	0*	1	1	1	1	1	1	1	1	1	1	1	1
4	SPACE	0	1	0	0	1	0	1	0	1	1	1	1	0	1	1	1	1	1	1	1	1	1	1	1
5	2nd DIGIT	0	1	0	1	1	0	1	0	1	1	1	1	1	0*	1	1	1	1	1	1	1	1	1	1
6	SPACE	0	1	1	0	1	0	0	0	1	1	1	1	1	1	0	1	1	1	1	1	1	1	1	1
7	3rd DIGIT	0	1	1	1	1	0	0	0	1	1	1	1	1	1	1	0*	1	1	1	1	1	1	1	1
8	SPACE	1	0	0	0	0	1	1	0	1	1	1	1	1	1	1	1	0	1	1	1	1	1	1	1
9	4th DIGIT	1	0	0	1	0	1	1	0	1	1	1	1	1	1	1	1	1	0*	1	1	1	1	1	1
10	SPACE	1	0	1	0	0	1	0	0	1	1	1	1	1	1	1	1	1	1	0	1	1	1	1	1
11	5th DIGIT	1	0	1	1	0	1	0	0	1	1	1	1	1	1	1	1	1	1	1	0*	1	1	1	1
12	SPACE	1	1	0	0	0	0	1	0	1	1	1	1	1	1	1	1	1	1	1	1	0	1	1	1
13	6th DIGIT	1	1	0	1	0	0	1	0	1	1	1	1	1	1	1	1	1	1	1	1	1	0*	1	1
14	SPACE	1	1	1	0	0	0	0	0	1	1	1	1	1	1	1	1	1	1	1	1	1	1	0	1
15	7th DIGIT	1	1	1	1	0	0	0	0	1	1	1	1	1	1	1	1	1	1	1	1	1	1	1	0*

Table 2. Truth table, number counter board. An asterisk (*) indicates outputs used; others are not wired.

each board as indicated in Fig. 6. Two are used because 1 regulator with a small heat sink ran too hot to touch. The power supply board also contains relay K1, which provides switching for the audio circuits to two radios and a switched ground for the PTT lines.

The manual keying circuit for use with the keyboard is shown in Fig. 3. Each pin of the keyboard is connected, as per Fig. 8, directly to U204. The COR circuit is driven by pin 7 of U204. Negative going (logic 0) pulses occur when any tone is being generated, and are sensed by Q203, which is usually biased on by the normally high output of pin 7. As the logic 0 pulses reach Q203, it turns off and the base of Q204 then rises to the voltage determined by R210, D201 and R211. Q204 then turns on, thereby providing a switched ground for the internal PTT line. When the tone stops, if the delay switch is closed, capacitor C204 discharges through R211 into the base of Q204 to provide an approximate one second delay.

The prototype unit was mounted in a custom made plastic box. The plastic was bent with a strip heater to conform to a space in my automobile. The corners were sanded and buffed to present a smooth molded appearance. Grey smoked plastic was used in the prototype because it was intended to backlight the panel (through Scotchcal plastic photographic material) to indicate the functions. However, space inside the housing precluded the use of bulbs in the required areas, so photosensitive Scotchcal aluminum panel material was used instead. Any suitable enclosure will be sufficient as long as there is adequate front panel space for the brand of thumbwheel switches used and the keyboard.

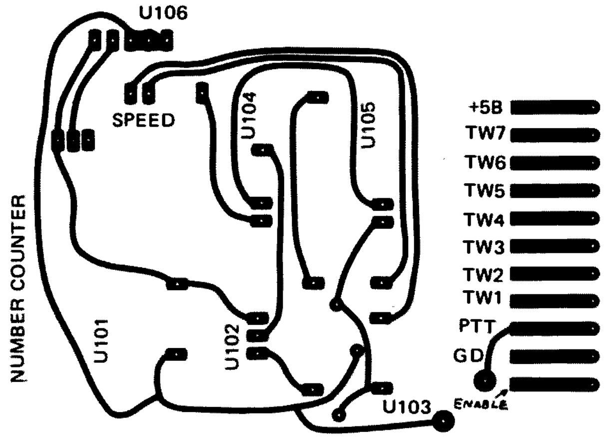

Fig. 10. Top view, number counter PC board (full size).

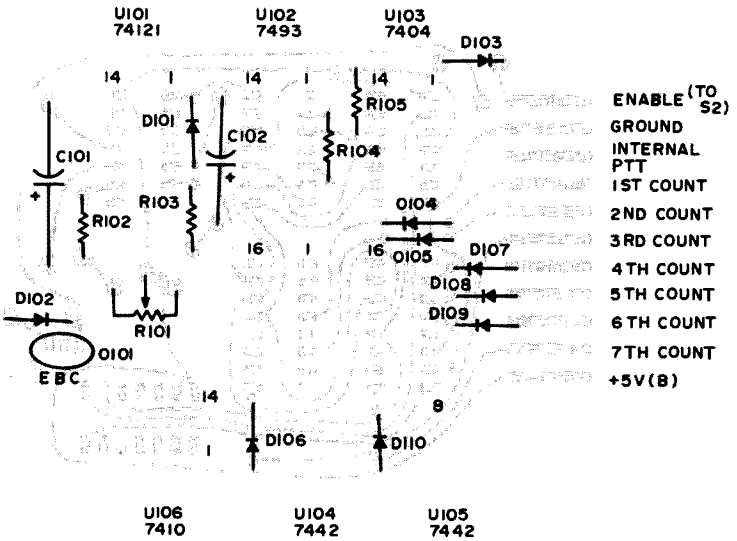

Fig. 11. Bottom view, number counter PC board (full size).

The thumbwheel switch bank consists of 7 thumbwheel switches designed to provide a decimal output rather than BCD. Any 10 position (or 12 position to include the # and *) rotary switches can be used instead, if they are available. Thumbwheels provide a better appearance and the use of a spacer between the 3rd and 4th digits will provide better readability of the full telephone number. The individual numbers 1-10 on each switch are all jumpered together and are wired to inputs 1-10 on the tone and encoder board. Each common terminal of the switches goes to the outputs of the number board: the 1st switch connected to the 1st count, the second to the 2nd count, etc. On most switches, a separate uncommitted terminal is available. These are all connected together and a 10k resistor (R106-R112) attached from this common bus to the common terminal of each switch. The common bus line is then connected to the +5 volt "A" source (see Fig. 9).

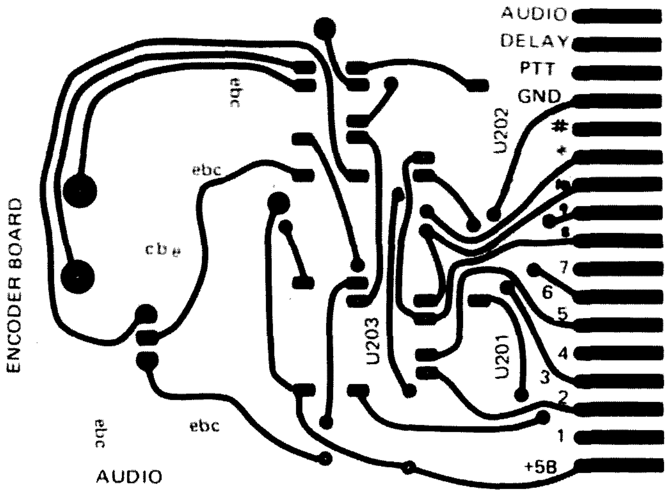

Fig. 12. Top view, encoder PC board (full size).

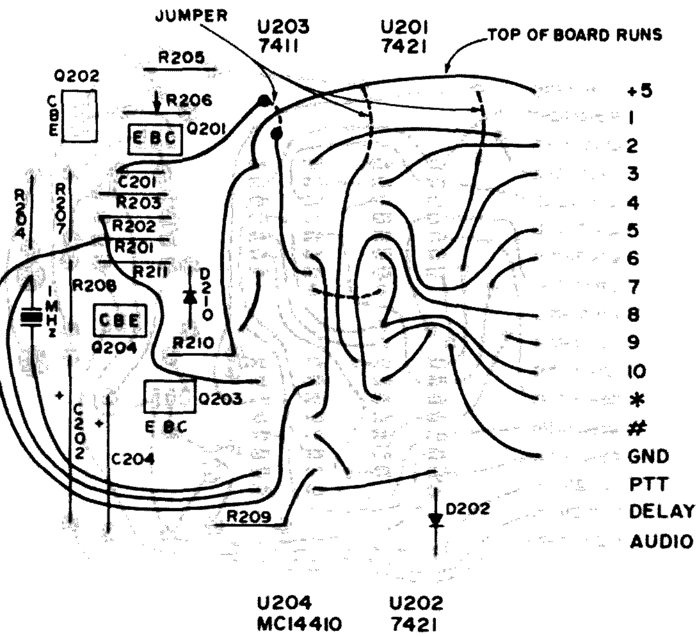

Fig. 13. Bottom view, encoder PC board (full size).

The four boards are plugged into mating board edge connectors mounted inside the cabinet. All wiring is kept as short as possible to maintain neatness, but lead length is not critical. If it is desired, the connectors may be omitted and the boards wired together at the connector foil, making sure that both sides are soldered. A Waldom connector containing 12 pins in a rectangular configuration was used on my enclosure to interface with two radios through a wired-in mating harness. Although the schematics (Figs. 4 and 6) show my hookup, the builder may want to use his own method of microphone and PTT interfacing to his own particular rig. One popular way is to place a microphone connector on the enclosure and plug the mike into it, then make a harness with a suitable plug to attach to the radio mike input. The power supply board containing the audio switching may then be omitted and the 4 mH choke (L301) mounted to the cabinet. The internal push-to-talk line from each board may be used to key the transmitter and the microphone wired in parallel with the encoder audio.

After constructing each board, it would be wise to check the operation before continuing on. The code access and number counter boards are simply hooked to +5 volts and the enable line grounded momentarily. Increased current pulses will be seen on power supplies equipped with milliammeters. The outputs K, L, M and N on the code board and TW1 through TW7 on the number counter board should pulse in sequence on every other clock pulse. A good indicator is an LED tied between each output and +5 volts, with a 220 Ohm resistor in series with each. They should flash in the proper sequence. The speed is adjusted by the pot on each board. Difficulties in performance will be traced to open runs or poor solder joints. Make sure both sides of each board are soldered. The connector pins on each board should be jumpered through the board for added reliability. It was found that the PC board connectors had to be gold plated as the tin plate aged and made poor contact with the edge connector.

The tone and encoder board may be checked by hooking a small audio amplifier to the audio output, +5 volts and ground to the proper terminals, and grounding each input in turn. The tones should be fully adjustable with the level set adjustment. If

difficulty is experienced, short one each of the a, b, c and w, x, y, z pins of U204 to ground to insure that the chip is operating. Then work backward to each gate, placing a ground on the input and checking that the output goes low.

If all seems to be working, wire the printed circuit card connectors together following the overall schematic in Fig. 6. In this case, wire wrap is very helpful if you have the capability. However, use of small #22 or #24 wires will aid in ease of wiring. #20 or #22 should be used in the external cable for better handling. The edge connectors can be a cinch 50-10-A-20, 2 cinch 50-12-A-20 and a 50-18-A-20 or their equivalents.

Again it is better to check the progress as you go along rather than find you made a wiring error later. Do the power supply connector first, wiring all internal connections and the external cable harness. Then wire the tone and encoder board connector to the power supply. Check operation at this point by applying +12 volts to the external input plug and generating a tone to see if relay K1 closes. Grounding the wire from the "delay" pin on the encoder board will cause the relay to release approximately 1 second after the tone stops. If all seems normal, proceed with the code and number counter boards. Grounding either enable input on these should generate the proper tones. The K, L, M and N outputs should be wired (in that sequence) to the tone board inputs corresponding to your repeater access code. If you only use 2 or 3 tones for access, use the first 2 or 3 letters of the sequence, because the K output stays on twice as long as the others (e.g., two clock pulses).

Next, wire the front panel controls. If the Chromerics pad is used, it should be mounted very carefully, making sure there is an easy fit between the 4 plastic shoulders. Warping this pad in the installation may make one or more contacts close, thereby keying the push-to-talk continuously.

If you elect to use an LED indicator over each thumbwheel switch so the scan sequence can be seen, wire these in next. The prototype had this feature but on later versions they were omitted for being redundant. Operation is heard with the internal audio amplifier, and the push-to-talk line indicator LED shows the sequence just as well. If they are used, attach a 270 Ohm resistor to each LED. The other end of the resistor goes to the 5 volt bus line on the switches and the anode of the LED connects to the common terminal on each switch (see Fig. 9).

Check for shorts in the wiring and then

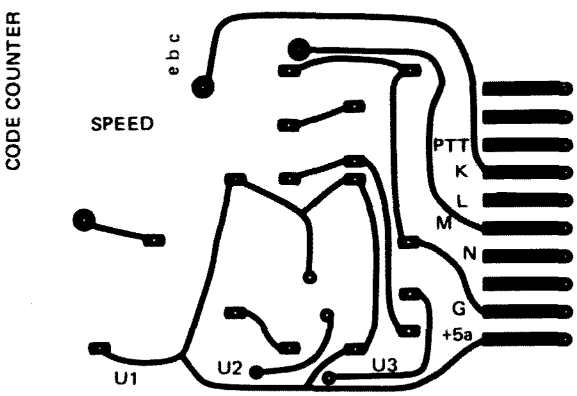

Fig. 14. Top view, code counter PC board (full size).

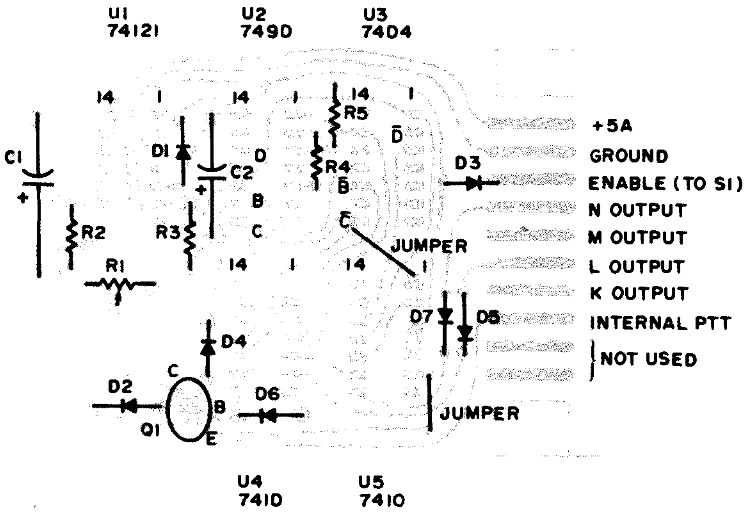

Fig. 15. Bottom view, code counter PC board (full size).

apply 12 volts, and check the overall operation. With the delay switch off, push each number on the keyboard and insure that the PTT LED lights and the relay closes. With the delay switch on, a delay of approximately one second will exist before the relay opens. Push the access code push-button (S1). The PTT LED should light, and if any of the numbers in the code correspond to what is in the thumbwheel switch bank, those LEDs above their respective switches should light. When the PTT light goes out, sequence the Number button. Again, each LED above the thumbwheel switches as well as the PTT LED should light, the former in sequence from left to right and the latter as long as the cycle is going. If all seems well, wire it into the transceiver. Do not close the box yet.

To set it up, have a friend listen to your audio and set the level adjust on the tone and encoder board to what he hears as just slightly lower than your voice. (Individual repeaters have different requirements but this should be a good way to "ballpark" set

		U14 Pin 4 1209 Hz (a)	U14 Pin 5 1336 Hz (b)	U14 Pin 6 1477 Hz (c)
U14	Pin 12 697 Hz (w)	1	2	3
U14	Pin 11 770 Hz (x)	4	5	6
U14	Pin 10 852 Hz (y)	7	8	9
U14	Pin 9 941 Hz (z)	*	0	#

Table 3. Touchtone matrix showing coding from U15 to U14.

it.) Punch in the access code, both automatically and manually, to check for wiring errors. The automatic code access board speed should be adjusted to just under what is too fast to bring the dial tone up. Next try to dial a number. Again, use both the keyboard and then the automatic feature to check operation. Too fast a dial rate will not be accepted by the telephone company equipment. Too slow a one may result in false dialing when you have a weak signal into the repeater. Ideally, for an exchange with all electronic switching, a speed of 40 ms on and 40 ms off is as fast as you can dial. Some older non-electronic exchanges won't go that fast. The best way is to experiment, leaving the dial rate adjusted just slightly slower than the fastest speed you can dial.

If you have trouble accessing the dial tone or getting the number to ring, be sure your transmitter is on frequency and your deviation is properly set, as well as mike gain (if provided) in your transceiver. Clipping, distortion, noise and otherwise low quality tones will almost never work.

The unit has been in use for about 13 months and has been tested to extremes of temperature, from the bare circuit boards lying on the floor under a 195° F heater, to start-up in the morning when the ambient temperature has been 15° F. With proper components (i.e., tantalum capacitors in the audio coupling and timing circuits), no thermal problems should be experienced. Re-design of the tone encoder using the Motorola MC14410 resulted in extremely reliable operation. The only problems experienced were with the ME8913 Microsystems International generator, which required extensive bypassing and ferrite beads around the frequency determining pins.

One word of caution to repeater groups is in order. It would be easy to manually dial a number like 1-703, then let the logic transmit seven digits very quickly. Since the phone company will allow the 40 ms dialing rate, other listeners may not realize a long distance call has just been placed. Number counters should be standard equipment on all repeaters.

The unit is a pleasure to use and sounds quite professional, just like the tones one sometimes hears on intercity or long distance dialing. It has also functioned as a conversation piece, for every time it has been used someone invariably has wanted to know how I learned to let my fingers walk so fast through a touchtone pad. ■

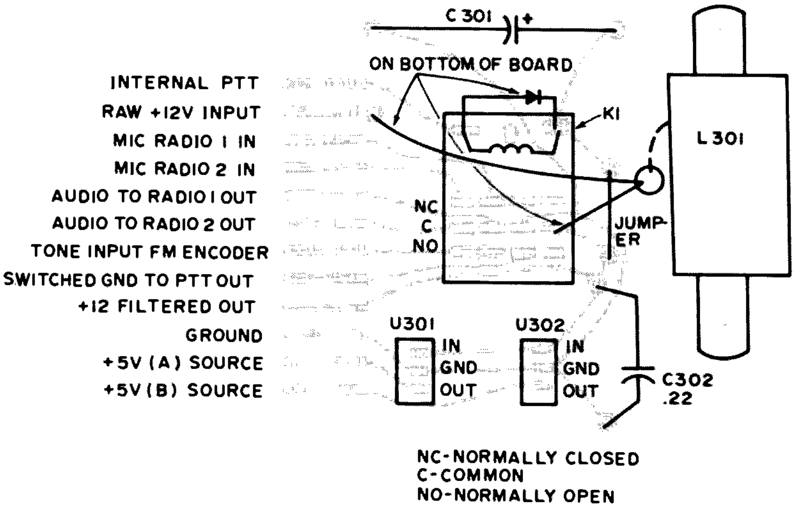

Fig. 16. Power supply PC board (full size).

Zapping Dead Nicads

by
Peter A. Stark K2OAW
196 Forest Drive
Mt. Kisco NY 10549

A major cause of nicad failure is overheating, caused usually by excessive charge or discharge . . .

Though individual nicad cells are relatively inexpensive, complete nicad batteries for specific pieces of equipment often cost an arm and a leg. The 15 volt batteries for 2 meter walkie-talkies are a typical example — they often cost $30 to $60 and up, depending on the source. Anything that can be done to lengthen their life is therefore of great interest.

This article is a continuation of an earlier article I wrote in the December 1974 issue of *73 Magazine*. As a result of that article I have received several letters from readers which have spurred me on to further reading and experimenting. This has led to several techniques for repairing or reconditioning nicad batteries, which should be of help to many nicad users.

In the 1974 article I mentioned that a major cause of nicad failure is overheating, caused usually by excessive charge or discharge. The big problem is overcharging the battery. The resulting heat causes a pressure buildup, which in turn causes venting of the sealed cell through the safety vent. This vent acts like a safety valve to relieve internal pressure and prevent a possible explosion. I had indicated that an occasional slight loss of electrolyte through venting would not cause too much harm, as the safety vent would reseal itself after the venting.

One reader (Lloyd W. Root K7AS) wrote to say that he has had much experience with nicads over many years, and has done a number of experiments on them. One of the things he has found is that some of the nicad safety vents are not resealable. They can be identified by a triangular hole in the positive end of the cell. The small metal tab stamped out of this triangular hole is aimed inward like a sharp point; under this tab is a thin plastic membrane which seals the cell. In case of internal overpressure, the plastic is pushed outward against the sharp point, which punctures a small hole in the plastic to release the pressure. Once this hole is made, it stays there and the cell soon dries up. When this happens, the cell will only hold a charge for a very short time.

Lloyd Root reported having experimented with a number of such dried-out cells. He disassembled one to see how it was put together, and found a place where he could drill a tiny hole through the case without shorting the internal plates. Then he injected distilled water through the hole with a hypodermic needle. By replacing the missing liquid, he renewed the cell to the point where it performed almost as good as new. Though I have not yet tried it, I suspect that a similar result could have been achieved by immersing the cell in distilled water and then applying pressure to the liquid in some way — perhaps by using a thick rubber bag or hot water bottle and squeezing it — to force the water back into the cell. Were it not for the fact that high temperature is very dangerous with nicads, the use of a pressure cooker would be very tempting! In any case, the vent could then be *loosely* covered with tape to prevent the liquid from evaporating again.

It is very important not to cover the safety vent and thus prevent it from working. I am told that when a nicad explodes from excessive pressure it really makes a mess. This brings to mind a dangerous condition I have seen in several batteries. As soldering to nicads is dangerous, welding is used to attach contacts to cells in multi-cell batteries. These connections are generally made with metal strips rather than wire to allow easier welding. In several instances I have seen the metal strip welded directly *over* the safety vent, thereby creating a safety hazard.

I have found that electrolyte leakage can

to Life

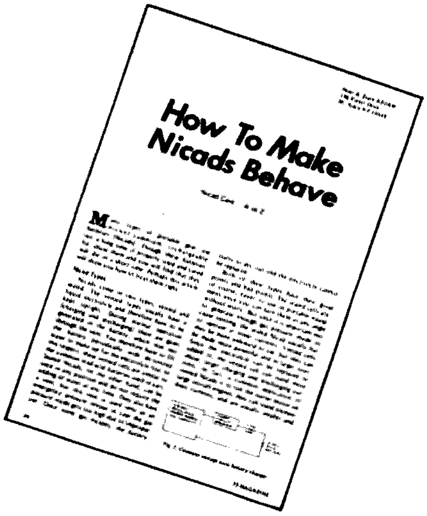
How To Make Nicads Behave

cause another safety hazard which may, under some conditions, lead to damage to the battery, charger, or walkie-talkie, and possibly even an explosion. This applies particularly to rapid-charge batteries. Here's why: The electrolyte which leaks out of a nicad is not just pure water, but actually is a conductive chemical. If a cell in a sealed battery such as the 15 volt battery for a 2 meter Motorola walkie-talkie leaks, the electrolyte forms internal leakage paths inside the battery which can discharge cells and form internal high resistance shorts.

Those nicad batteries designed for rapid-charge use have a built-in thermistor connected to an external contact on the battery, which allows the charger to sense internal temperature. As long as the battery is still partially discharged, cell temperature is fairly low and the thermistor resistance is also low. As soon as the battery is fully charged, cell pressure and temperature start to rise. This makes the thermistor resistance go up to 1k and more. This signals the charger to switch from its high-current charge rate (which is designed to charge the nicad in one hour) to the standard low-current charge rate.

Now suppose that electrolyte leakage inside the battery puts a high-resistance short across the *thermistor.* Even though the battery is fully charged and the temperature is rapidly rising, the charger still sees a low resistance and therefore continues charging at the high rate. This can rapidly melt all the plastic parts on both the battery and charger, and in an extreme case even cause an explosion.

Short of periodically opening the battery to look for leakage (and rinsing it out with water if you find any), there is no foolproof way of detecting this problem before it causes damage. But there is a simple test which may sometimes spot the problem before it becomes serious. This is to connect a voltmeter across the thermistor contacts on the outside of the battery. You should not measure *any* voltage. If you do, then there must be some internal leakage path between the thermistor and at least one of the cells, indicating that some electrolyte has been vented.

Another common cause of nicad failure is internal shorting of one or more cells. In a single cell you can identify this problem by the fact that the cell measures exactly 0 volts, and when checked with an ohmmeter measures 0 Ohms. In a multi-cell battery you may note that the open-circuit voltage of the battery is less than the usual voltage even after a full charge. A normal nicad cell measuring 1.25 volts under most conditions will reach 1.4 volts or even slightly more during and right after a charge. Thus the 15 volt battery from a Motorola HT-220, which has twelve cells, will read up to about 17 volts right after it is charged. If the open-circuit voltage after a charge is only 15 volts or even less, that indicates that one or more cells are shorted.

I have in the past thrown away a number of shorted cells, and now wish I had kept them. That's because I have found a way to fix them. I presently have four batteries for my HT-220 which were given to me because their voltage was down to as low as 7 volts. I have now been using them for some time to see whether they will fail again. In one of these batteries, which started out with four shorted cells, one of these cells has shorted again, but I was able to again rejuvenate it and it has been working ever since.

The idea came to mind while I was carefully rereading a part of the GE "Nickel-Cadmium Battery Application

Short of periodically opening the battery to look for leakage, there is no foolproof way of detecting this problem before it causes damage . . .

Another common cause of nicad failure is internal shorting of one or more cells . . .

Once a cell is already shorted why can't we burn out the short by applying an external heavy current burst?

Engineering Handbook," Publication No. GET-3148 (and its supplement GET-3148S), available from the General Electric Company, Battery Products Section, Box 114, Gainesville FL 32601. At one point they mention that sudden failure due to internal shorting of a cell is more common when a battery is discharged than when it is fully charged. Though they are not sure of the exact reason, they speculate that this may be because internal shorts start out by being very small needle-like projections which short the two plates together. A well-charged cell may be able to burn out this tiny short as soon as it forms by passing a heavy current through it, whereas a discharged cell can't. Well, I thought, once a cell is already shorted why can't we burn out the short by applying an external heavy current burst? I asked several friends for their old, shorted walkie-talkie batteries and went to work.

The first time I did this I took the time to open the battery case using a knife attachment on my soldering iron and a lot of force. Some battery cases are easier to open than others. The cases for the replacement HT-220 batteries made by Alexander Manufacturing appear only to be glued together at the corners, and easily come apart. The original Motorola batteries, on the other hand, are sonically welded all around, and attached with two studs in the middle as well. Quite a bit of huffing and puffing is required to open them up.

Once open, I borrowed a trick suggested by K7AS. He noted that a cell which has been reverse-charged will not take a charge of the proper polarity unless first given a heavy burst of current from a regular dry cell connected directly in parallel with the nicad. Since a new dry cell has a voltage of about 1.5 volts and a fairly low internal resistance, this pushes a good current through the nicad, forcing it to take on the proper polarity. When the nicad cell reaches 1.5 volts, the current drops to a very low value.

Knowing which cells of my battery were shorted, I took a no. 6 dry cell and very heavy leads and connected it directly across each shorted nicad cell, plus-to-plus, for about five or ten seconds. This gave each shorted cell enough of a current burst to burn out the short, and even gave it a slight charge. After removing the dry cell, I noted that the nicad cell now had a voltage across it. Since this particular battery had four shorted cells, I repeated this procedure once for each cell. Once the shorts had been removed, I put the battery into the charger and charged at the standard rate for 15 hours. I have now been using the battery for several weeks, and it has been performing well. I am, however, careful not to discharge the battery all the way lest one of the cells short again, although tests on other batteries to determine total battery capacity – down to a total discharge – have only once resulted in a shorted cell which was easily repaired.

But opening Motorola batteries is a chore, so the next three batteries were fixed without being opened. The procedure is similar – putting a heavy current through the battery – but the technique of doing it is slightly different.

My first try worked, but not reliably. It consisted of taking a 30,000 uF computer-type electrolytic capacitor, charging it to 25 volts, and then discharging it into the nicad battery. After several tries this did bring one of the shorted cells up to voltage, but it appeared to be a laborious job at best. Obviously more drastic steps were needed.

I, therefore, started by putting the entire battery into the charger and charging at the standard charge rate (.1C) for 15 hours. Though this did nothing for the shorted cells, it did result in the good cells being fully charged. Now I took a pair of pliers and connected the jaws directly across the battery terminals to provide a nice, low-resistance short across the battery for about 2 to 3 seconds. The resulting short-circuit current, provided by the good cells in the battery, burned out the shorts in the shorted cells. It also slightly reverse-charged the bad cells, which I immediately counteracted by putting the battery into a high-current (.5C) charging circuit for about 30 seconds. Then I charged the batteries for several more hours in the standard .1C charger, and checked the open-circuit voltage. In a few cases, the treatment had to be repeated several times to repair all the shorted cells – one of the batteries had 5 cells out of its 12 originally shorted – but eventually the battery voltage came up to 17 volts after a charge, and stayed there.

In addition to the reference given earlier to the GE nicad manual, other prominent nicad manufacturers include Gould, Eveready and Union Carbide, who may be able to supply additional information if you need it. There is also a booklet available from the U.S. Government, which I have requested but not yet obtained; it is a report entitled "Chargers and Charging Techniques," no. LESP-RPT-0202.00, which applies specifically to nicads used in portable radio gear. It is available from the National Criminal Justice Reference Service, Law Enforcement Assistance Administration, U.S. Department of Justice, Washington DC 20530. ■

Plugboard Extender for Under $3.00

by
Kent A. Mitchell W3WTO
1004 Mulberry Avenue
Hagerstown MD 21740

Recently, I had the opportunity to purchase some surplus digital equipment. One such unit, a specialized shift register type used to test some NASA space hardware, contained approximately 50 plug-in circuit boards on which were mounted hundreds of transistors and other components. This unit, once an example of state-of-the-art construction, is now 10 years old and in these days of integrated circuits is in style about as much as a '53 Studebaker. So, I was able to acquire the gear for only $5.

However, before I even thought of cannibalism, I could not resist firing up the equipment to see what would happen. (The unit contained a husky 5 volt power supply – alone worth the price.) Immediately, lights lit and registers shifted. Well now, after second thought, why not experiment a little bit and see if I couldn't build my own not-so-miniaturized calculator?

First problem was how to get 'scope probes on some test points to find clock pulses, etc. The circuit boards themselves are coated with a thick layer of glop called MFP (short for moisture-fungus-proofing) so direct contact with component leads was not possible. The board sockets would be the next logical place for signal access; however, these were recessed deep within the chassis and covered by wire bundles. Clearly, what I needed was a "board extender," that is, a simple point-to-point wired plug and socket arrangement which would enable the selected circuit board to be connected into the chassis circuit while being physically external of the chassis.

A quick glance at my selection of parts catalogs shocked me into the realization that such a simple item was priced at a minimum of $15. This was three times what I had paid for the unit I wanted to test. There had to be a better way – like build my own. Back to the catalogs!

Vector Electronics Co. produces a "Universal Plugbord" series that are blank except for the etched contact fingers and prepunched with a grid of holes for experimental component placement. A 22-contact board of this type is available inexpensively from Burstein-Applebee Co., 3199 Mercier St., Kansas City, Mo. 64111.

Next, an appropriate socket needs to be bolted onto the board, and these are usually available from Poly Paks Inc., P.O. Box 942, South Lynnfield, Mass. 01940. Some scraps of hookup wire connect the two and a handy test aid is added to the shack. ■

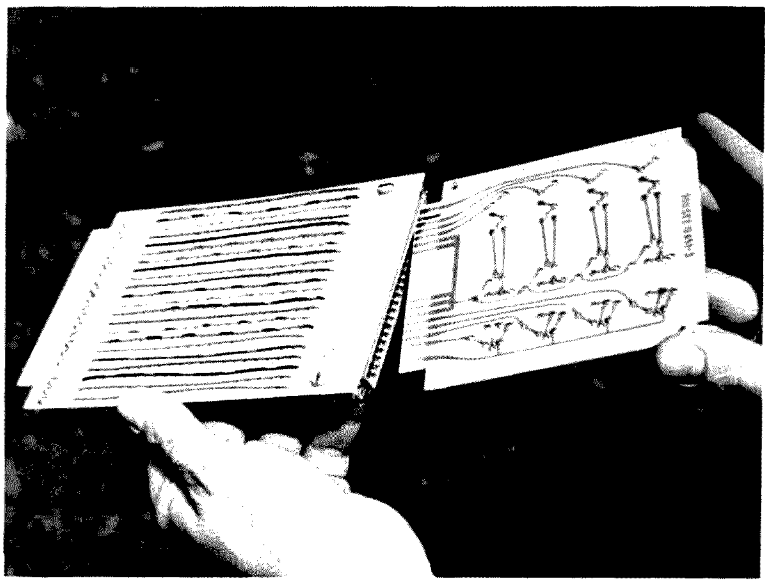

Eyes For Your Shack

Conclusion

by
G. E. Friton WØACR
628 Marshall Ave.
Webster Groves MO 63119

The moment of truth (or consequences) has arrived! Install all active components *except* Q303, 4, 5, 7, 8 and 9 in the vertical amp, and Q405, 6, 8 and 9 in the horizontal amp. Set your scope's controls: intensity, three quarters CW; focus, midrange; astigmatism, midrange. The remaining controls will get set as you progress with initial checkout.

Again, remember that those innocent-looking batteries can easily reduce your scope to a pathetic pile of rubble in 2 seconds or so, should a minor disagreement in who is going to control things develop (it will). So use a 1 Amp fuse in series (it'll never blow, of course), to discourage such outbursts of temper.

Apply power. Note that both inverters start (it won't exactly sound like the Boston Pops, but it'll sure sound good!). Check +5, −5; set +95, positive and negative HV (the latter two depend on the options chosen). By this time, there should be a bright, unfocused spot on the CRT. Set the intensity control for a medium brilliance spot, and check the focus control. Since the astigmatism control has not yet been set, the focus probably won't be too sharp. Reduce spot intensity to dim, and remove power.

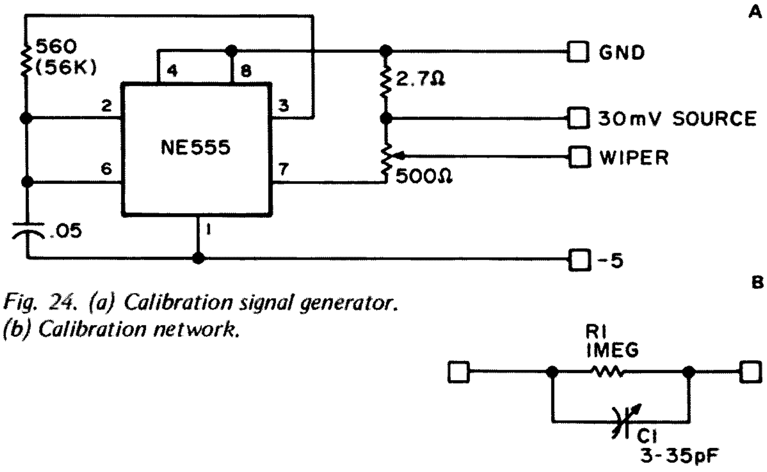

Fig. 24. (a) Calibration signal generator. (b) Calibration network.

Horizontal Board Setup

Install Q405, 6, 8 and 9 in the horizontal board. Set the scope's controls: timebase, 1 ms/div; mode, ac; level, CW; slope, +; horizontal position, midrange; variable controls, Cal.

Apply power. Adjust horizontal position control to give 42 V on the collector of Q405. Then adjust R438 for 42 V on Q408's collector. Beam should now be in the center of the screen. Check operation of horizontal position control – should move the beam from right center to off-screen left.

Set mode to AUTO, timebase to 100 ms/div, and center the trace. Note direction of the sweep; if it's backwards, reverse the connections to the CRT horizontal plates. Set timebase to 1 ms/div. Adjust R422 for a horizontal trace fully across CRT. This completes initial setup of the sweep board. Turn the scope off.

Vertical Board Setup

Next to be adjusted is the vertical deflection amplifier. Insert Q303, 4, 5, 7, 8 and 9 into their respective sockets in the vertical amp. Set scope controls: vertical position, midrange; vertical input, GND; vertical attenuator, 1 V/div; timebase, 5 ms/div; trigger, INT. Turn the scope on. Set R320 on the vertical amp board to give 42 V on Q309's collector. Set R318 for 42 V on Q305's collector. Check that the vertical position control causes the trace to deflect off-screen up and down. Using a flashlight cell, note that trace deflects up for positive vertical input; if not, reverse vertical plate leads. Switch vertical input to ac, and apply your .001% accurate 60 Hz source (finger) to the vertical input. Note wiggly line on CRT. This checks out the basic operation of the vertical amplifier board.

CALIBRATION

Now what is needed is a cheap and simple semi-square wave source, of reasonable risetime. If you have a function generator handy, fine; otherwise, throw together a simple one from a 555. Fig. 24(a) gives the circuit, with 40 ns RT, sufficient for our purposes. The pinouts are correct, backwards as the circuit may seem. Connect test oscillator to −5 V source (scope's −5 is OK). Connect test oscillator's 30 mV output to vertical in. Set vertical attenuator to 10 mV/div, trigger mode ac HF, and timebase to 50 us/div. Adjust trigger level for stable trace; then readjust timebase for 1 to 2 cycles display. Disregarding any overshoot, set R310 (vertical board) to give approximately 3 divisions deflection.

There are two trimmers on the vertical amp board. Initially set each one to minimum capacity position. Then, observing the rising and falling edges of the waveform, adjust each trimmer equally to achieve the best looking edges with minimal overshoot and ringing. Slightly rock each trimmer individually for final tweaking.

Remove the generator, and modify it for 1 kHz, by increasing the 560 Ohm resistor to 56k. Set the generator's pot for minimum output, and reconnect to your scope, using the wiper for vertical input.

Reapply power, and set the scope for dc coupling, ac LF, 5 ms/div. Adjust the level control, if necessary, for a stable presentation of several cycles. Carefully set the astigmatism pot R601, and focus control for best focus in the areas indicated in Fig. 25(b). You will need to alternately adjust each control several times for best focus.

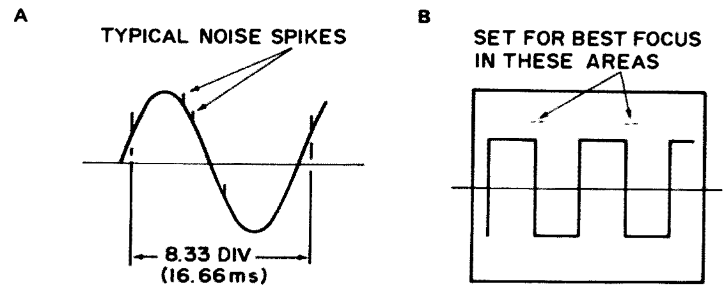

Fig. 25. (a) Timebase calibration. (b) Astigmatism set.

Vertical Attenuator Compensation

Now for vertical attenuator compensation. You'll need the little network, Fig. 24(b). Follow the procedure of the calibration chart carefully. Always set the generator for 3 to 4 divisions display during this procedure.

Following the compensation procedure, you'll need to fine-adjust the vertical gain pot; use a fresh D cell as vertical input, negative grounded. Set the scope for .5 V/div and, with input grounded, set vertical position for a trace on lowest line of graticule. Switch to dc coupling, and adjust R310 for very slightly over 3 divisions deflection. All other ranges are now calibrated.

Only one thing left to calibrate – the timebase. A reasonable job may be done with your calibrated finger, by setting the oscilloscope for 2 ms/div, in AUTO mode.

Vertical Attenuator Calibration Procedure

Vertical Attenuator (V/div)	Generator Output	Adjust	Result (Set for best square wave)
.01	network	C1	Adjusts network to vertical amplifier input capacity.
.02	direct	C714	Adjusts x2 attenuator.
.05	direct	C711	Adjusts x5 attenuator.
.02	network	C713	Adjusts x2 input capacity.
.05	network	C710	Adjusts x5 input capacity.
0.1	direct	C708	Adjusts x10 attenuator.
1.	direct	C705	Adjusts x100 attenuator.
10	direct	C703	Adjusts x1000 attenuator.
0.1	network	C707	Adjusts x10 input capacity.
1	network	C704	Adjusts x100 input capacity.
10	network	C702	Adjusts x1000 input capacity.

Applying your finger to the vertical input will give about 1 cycle of 60 Hz, usually with in-sync pulse-type garbage riding along (fluorescent or dimmer transients). With the horizontal position control, set one of these spikes on the leftmost line of the graticule. Then set R418 to place the next identically-placed spike slightly less than 8½ divisions from the first as shown in Fig. 25(a) – 8.33 divisions to be exact.

To be a bit more exact in timebase calibration, use that handy signal generator in the living room. Simply place the vertical probe near the TV. By locking on field rate, 60 Hz, you have accurate 16.6 ms markers, the vertical sync pulses; and using ac HF coupling, you can lock onto 15,750 Hz (horizontal sync), to check the timebase with 63.5 us markers. To check the highest sweep speed, locate the 3.58 MHz oscillator (if the XYL will let you dig into the set), and drape the probe near it. On 1 us/div, you should have 3½ complete cycles per division. Since part of the timing capacitor is cable capacity, an unknown, wait until everything works, and is neatly cabled, before making any value changes to tweak the 5, 2 and 1 us/div ranges in. Normal cabling length (6" or so) will affect it 10 – 20%.

Congratulations! You now have an indecent oscilloscope! Of course it's indecent – you haven't dressed it up yet!

Professional Touches

Some thoughts on making a really professional front panel . . . remember that template of the front panel? Now's when it'll prove invaluable. Make a few copies of it with carbon paper and use one of these to pencil in the nomenclature in approximate position. Then make a very careful, squared-off version for a lettering guide.

You now have two choices: Either do the finished lettering, actual size, on a piece of lightly frosted mylar, and use by sandwiching it between clear or colored .020 acetate or polycarbonate and white paper, or make a double size version, get an actual size negative, and contact print one on standard black and white photographic paper. Then sandwich this photo between the front panel and acetate. The latter method will generally give a more finished appearance. Note that plexiglas is unsuitable as a cover material, as it will crack under the uneven strain of pulling down mounting nuts, where polycarbonate and acetate simply give a little.

The Charger and Ac Power Supply

Another needed item is an ac power supply – charger for your scope. Fig. 26 is a power supply that will support the scope indefinitely, or fully charge the Gates batteries in about 5 hours, nicads overnight. Use the appropriate network and set the regulator correctly for the type of batteries you have.

Note the use of a non-shortable polarized charging plug, and the diode D601 to prevent backfeed shorts. This diode has proven very handy at times; if you forget the charger, simply use a 150 W lamp (Gates cells) or a 40 W lamp (2A-H nicads) for a charger.

Cleaning It Up

With everything working, it's now time to nitpick a bit. Check to see if inverter garbage is getting into anything; it'll probably show up as small pulses on the trace, or erratic sync problems. Suspect grounding or lead dress problems first. Check by strapping a suspected ground to different points, and moving leads and cables around.

When you're satisfied with your scope's performance, tiewrap the cables neatly. Remember, you may need to touch up the 5, 2 and 1 us/div sweep speeds. Put the cover on, charge the batteries fully and enjoy.

Accessories

First thing you'll want is a good 10x probe, easily carved out of a gutless ballpoint pen. File a small nail into a probe, solder a paralleled 9.1 meg, and 2-20 pF trimmer to the nail head, and add some RG 174 U. Adjust using a square wave.

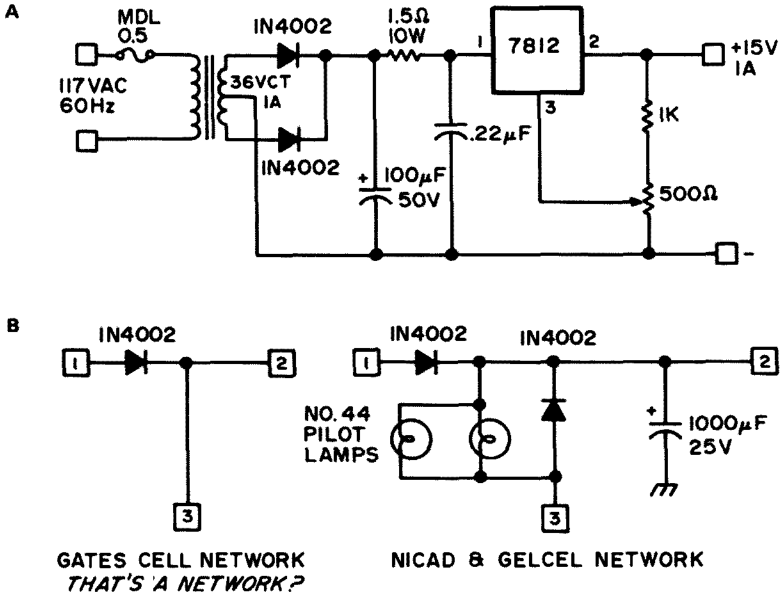

Fig. 26. (a) Power supply – charger. 7812 must be well heat sinked. Set output for 14.7 to 15 V for optimum battery cycle life. 15.6 V will materially shorten life of Gates cells. (b) Charge networks.

Another extra is an illuminated graticule – all that needs to be done is mount a couple of miniature lamps on the plexiglas graticule edge. The scribed lines will glow brightly. A push-for-illumination switch will conserve the batteries.

Also, a handle should be added to your case for carrying ease. A swivel type, mounted somewhat forward of center, will double as a tilt stand.

Hindsight

Typical of such a project, looking back always finds things that can be improved. A few things you might consider for your scope:

1) A x10 expand for the timebase. This is relatively easy to implement: Change R429 to 1.2 meg, and make R422 switch-selectable 10k and 100k pots. Effective top sweep speed will then be 100 us/div. By the way, the 555 gets downright ornery if you try to push it that far, so don't expect it to go much past .5 us/div . . . use the expanded-sweep method instead.

2) A simple but handy addition is switching of the auto mode coupling capacitor (C606) to keep the trace bright at high sweep speeds with no input. Use 1 uF, 0.1 uF, and .01 uF, the latter value to be used with the high sweep speeds.

3) A somewhat better regulation scheme for the HVPS, involving direct tapoff of the negative high voltage, instead of at the first multiplier. This was used in an earlier supply, and is capable of much better regulation, but is more expensive, due to the greater number of zeners required.

4) Dual trace capability: The vertical amplifier is designed to accept this inclusion with minimal changes. Make another vertical preamp, up to Q302 and Q306. Then use an astable multivibrator to drive FET or 4016 CMOS switches placed in series with Q302 and Q306 signal lines, switching between each preamp output. Also include a summing point for all the blanking signals, and trigger pickoff for alternate trace generation.

5) A protective cover, if you intend to use the scope in the field. Such a cover, of vinyl or cloth, can probably be made by the YL or XYL (for the price of a little flattery).

A Wee History

Begun from scattered ideas in May '74, and completed in September, the scope has since been in constant use and has proven to be extremely useful, stable and rugged. It has been used in 5° weather, kicked, rained upon, and worst of all, subjected to travel in my Jeep. It's a hardy little devil! ■

It's been used in 5° weather, kicked, rained upon, and worst of all, subjected to travel in my Jeep. It's a hardy little devil!

Build This Digital Capacity Meter

by
I. M. Chladek
PO Box 93
Kenmare
1745
Rep. of South Africa

One of the common problems any constructor faces is determining the exact capacity of a capacitor from his junk box or for use in af filters, etc. Small (and cheap) RLC bridges are not accurate enough and – if, for example, you try to measure 100 mixed values of capacitors from a surplus pack – you may well run out of patience. Furthermore, in the age of integrated circuits and frequency counters, everybody is getting lazy. Well, here is an instrument which eliminates all these troubles, presents the value of capacity instantly in digital form, is highly accurate and is fairly simple to construct.

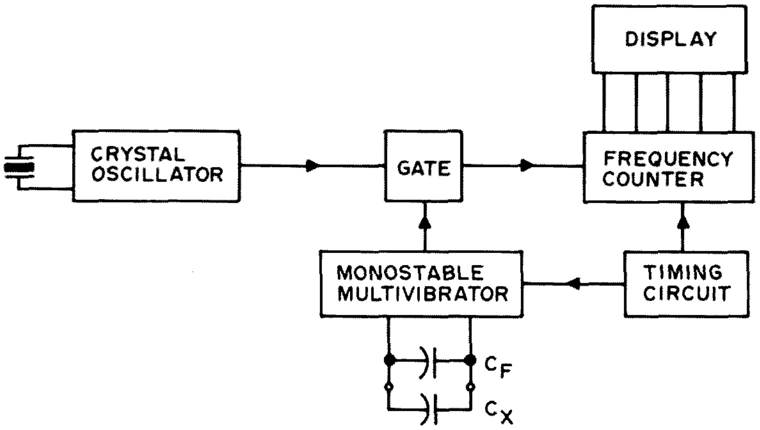

Fig. 1. Block diagram.

First, some information about the C-meter:

1) It measures capacitors from 1 pF to 1 uF in two ranges – 9999 pF and 999.9 nF.

2) Display is four digits in the above ranges, with leading zero suppression and overflow indicator.

3) Accuracy is better than ± 0.1% of full range ± 1 digit for higher values of capacitance in both ranges; for lower values of capacitance it is still very good (i.e., it is possible to determine if the measured capacity is 1 or 2 pF). (The above accuracy is of course in relation to the standard used for calibration of the C-meter and applies only for capacitors with a good Q – see text.)

4) No warm-up period is required. It measures immediately after switching on, with full accuracy.

5) Operation is extremely simple, with only two controls: zero adjustment and range switch.

6) With the exception of a power supply, the whole unit fits on two small printed circuit boards.

7) The price of the complete unit should be around $50, depending on how familiar

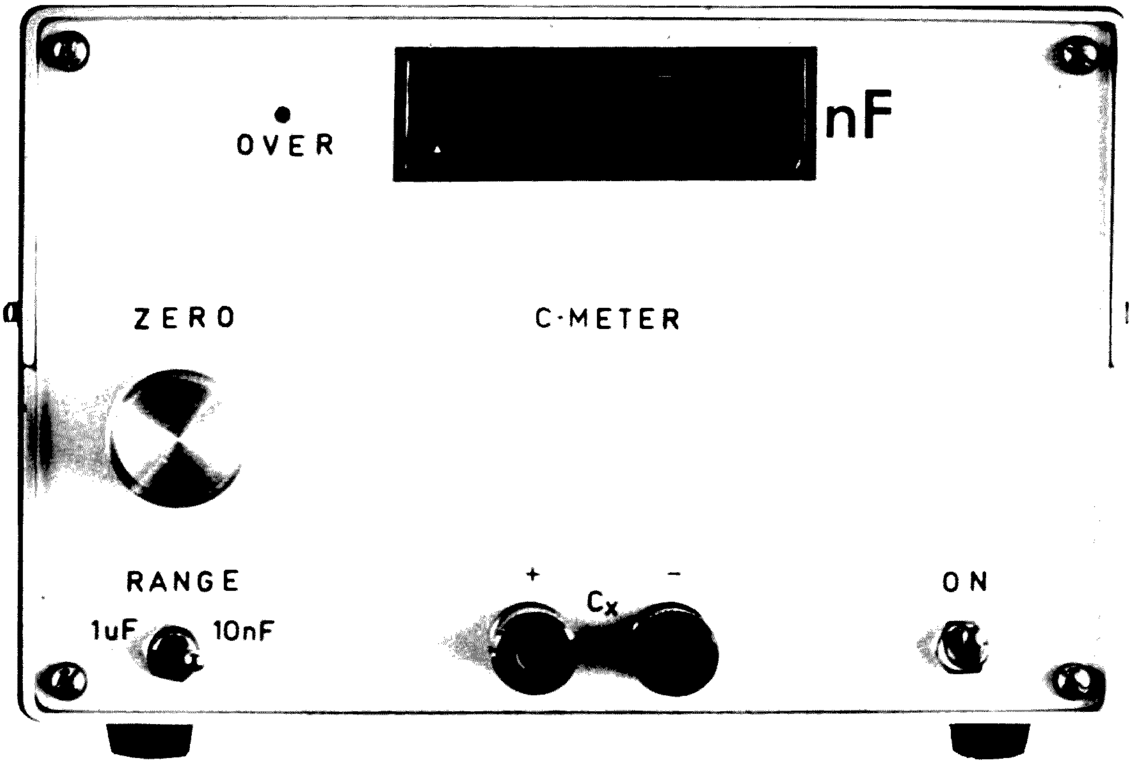

you are with cheap sources of TTL integrated circuits. (Maybe most of them are in your junk box.)

The basic principle is very simple and well known; the only difference is *how* it has been used. A similar unit was described some time ago, but it measured only higher values of capacitance, and used different devices.

Fig. 1 shows the block diagram of the C-meter. The heart of the unit is the monostable multi-vibrator (MMV), which produces gating pulses. The length of these pulses is directly proportional to the value of capacitor C_X. I had to consider practical limits of the MMV integrated circuit used (SN74121), the crystal oscillator and the frequency counter described later. Using only C_X and no C_F, with the highest permissible value of the timing resistor, will result in a pulse length of about 25 usec (see data book for SN74121). The crystal oscillator frequency must then be 40 MHz in order to obtain "1000" on the display. But, due to the long leads to the terminals for C_X, hum, etc., the display was not stable – especially for values of C_X under 100 pF. To be on the safe side, I decided to start with a value for C_F of 1000 pF. This cured the problem. But with no C_X on the terminals there was "1000" on the display. Well, instead of resetting to "0000", I reset the counter to "9000"; then with no C_X it counted to "10000", but the first digit was not displayed and the resultant display was "0000". Similarly, for higher range, the counter was reset to "9990". Reset circuits are then a bit more complicated and the overflow indicator must be a two stage counter, but this is not a serious complication.

Capacitance ratio between range 1 and 2 is 1:100. To obtain a correct reading on range 2, the frequency of 40 MHz (for range 1) must be divided by 100, resulting in a frequency of 400 kHz.

The last part of the C-meter is the timing circuit. It generates trigger pulses for the MMV, strobe pulses for latches and reset pulses for counters. The last ones are distributed as described above with the help of a few TTL gates.

Flicking of the least significant digit is not suppressed for two reasons: to simplify construction and to enable recognition of differences between, say, 17.0 and 17.5 pF. In the latter case, the display would have changed from 17 to 18. I used cheap Minitrons for display and this determined the frequency of the timing circuit; it must be low enough to read both values comfortably, e.g., 17 and 18. After a few tests I left it at about 2 Hz. The timing oscillator is then running at 20 Hz and is divided by 10 with the SN7490. Pulse "4" is used for

The basic principle is very simple and well known; the only difference is *how* it has been used . . .

triggering the MMV, "6" is used as strobe pulse for latches, and "8" is used for reset pulses. This system works very well, and leaves about 100 ms between trigger and strobe. With 1 uF and 40k Ohm, the SN74121 generates about 25 ms pulses, so that it is well within the above 100 ms. Any other combination of the outputs from the SN7490 is, of course, possible.

I decided (after some consideration) to divide the instrument into two parts:

1) Crystal oscillator, MMV, timing circuits and gate.

2) Frequency counter and display with overflow indicator.

Both parts can be tested separately before final assembly of the C-meter . . .

This arrangement reduces the size of the printed circuit boards which are mounted in parallel and interconnected by means of a few wires. Both parts can be tested separately before final assembly of the whole C-meter.

Frequency Counter and Display with Overflow Indicator

This unit is mounted on a single-sided printed circuit board 110 by 80 mm. Using a single-sided printed circuit board for such a complex circuit results in a few jumpers being necessary. However, the use of double-sided printed circuit board would not be fully justified – it would be much more difficult and expensive.

This unit is basically a 4-stage frequency counter with overflow indicator, which reacts only to every second pulse from the last decimal counter as explained earlier. Decade counters used are SN7490, with the exception of the first one, which must handle frequencies around 40 MHz. An SN74196 is used here instead, as it can handle frequencies over 50 MHz. Latches SN7475 and BCD-to-seven-segment decoders SN7447A are used to drive 7-segment incandescent displays (Minitrons) of a cheap foreign make, type 3015-F. If any other type of 7-segment display is used, you must check to see if the pin arrangement is the same. If not, the printed circuit board must, of course, be modified accordingly. The overflow indicator uses an SN7473, one surplus plastic switching transistor and an LED (TIL209 or similar).

I used IC sockets for the Minitrons only (MOLEX type); all the other integrated circuits are soldered directly into the printed circuit board. With surplus integrated circuits this is a bit risky – the decision is yours.

There are four resets for the counters, as well as one for the overflow indicator and strobe for the latches. Two wires are for switching the decimal point of the second Minitron for the higher range.

Oscillator, Gate, MMV and Timing Circuits

I tried a few types of harmonic oscillators and the most successful is shown in Fig. 3. It is reasonably stable and the output voltage is high enough to drive a buffer stage, which drives high speed gate IC14A (SN74HOO). Crystal X is a harmonic type (3rd or 5th harmonic) and *any* frequency between 35 and 45 MHz is suitable. Coil L1 has 10 turns of 28 SWG enameled wire on a 5 mm diameter with a tuning slug. Capacitor C_O tunes with L1 to the harmonic frequency of the crystal X. The coupling coil is 2 turns of insulated wire (24 SWG) over the "cold" end of L1.

The buffer stage Q3 must safely drive the buffer gate IC14A. The easiest way to check if IC14A is driven enough is to measure the

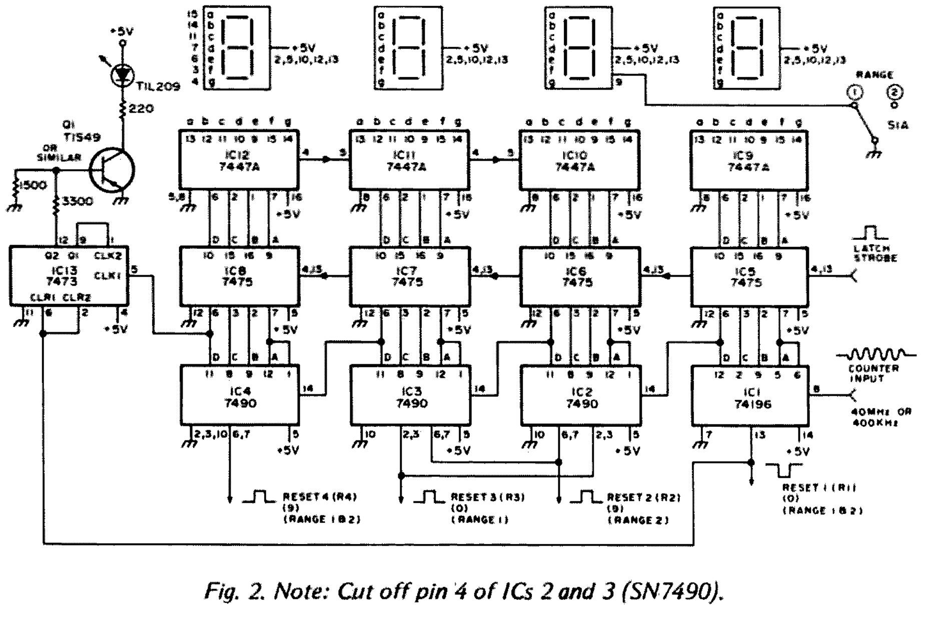

Fig. 2. Note: Cut off pin 4 of ICs 2 and 3 (SN7490).

rf voltage with an rf diode voltmeter at pin 11 of IC14. If the rf voltage is low or unstable, I recommend that you change the value of the base resistor of transistor Q3 or the transistor itself. Unstable or low rf voltages (e.g., under 2 V) will result in unstable or no display of the measured value of capacity. So get it to work one hundred percent. This is probably the only difficult part of the whole instrument.

The rf output from IC14A is fed into another gate IC (14B) and divided by 100 (IC15 and IC16). Range switch S1B blocks IC16 for range 1 via IC20E, so that at the output (pin 11) of IC16 there is logical "1". At the output of IC14C (pin 3) is a 40 MHz signal. If the range switch S1B is in position 2, gate IC14B is blocked, the output (pin 8) is logical "1", IC15 and IC16 divide the 40 MHz by 100, and the 400 kHz output (pin 11 of IC16) goes via IC14C to pin 4 of the gate IC14D.

One half of IC17 (dual Schmitt trigger) works as an oscillator; a 47 uF 10 V solid tantalum capacitor and a 470 Ohm resistor make up the timing circuit for approximately 20 Hz. This frequency is fed into IC18 (an SN7490 decade counter). The B, C and D outputs of IC18 are used to produce trigger, strobe and reset pulses. Trigger pulse "4" from pin 8 of IC18 is reshaped in the second half of IC17 and fed into IC21 (the SN74121 MMV), which produces a pulse with length directly proportional to the value of capacitor C_X (+C_F). This pulse (at pin 6 of IC21) is used to enable gate IC14D. The output from IC14D (pin 6) goes to the counter input.

Strobe impulse "6" is formed by the B and C outputs from IC18 (the decade counter) in the gate IC19B (SN7400). The output is a negative impulse and, as the SN7475 latches require positive pulses, it is inverted in one of the hex inverters (IC20B) of SN7404.

Reset 1 and 4 pulses are common for both ranges. The D output from IC18 goes via IC19A to Reset 1 (negative pulse). Reset 2 must be a positive pulse – thus, Reset 1 is inverted in IC20A.

For range 1, the Reset 3 pulse must be positive. With S1B in position 1, gate IC19C is open but the output pulse is negative – it is therefore inverted in IC20C. The Reset 2 output is logical "0", as IC19D is blocked.

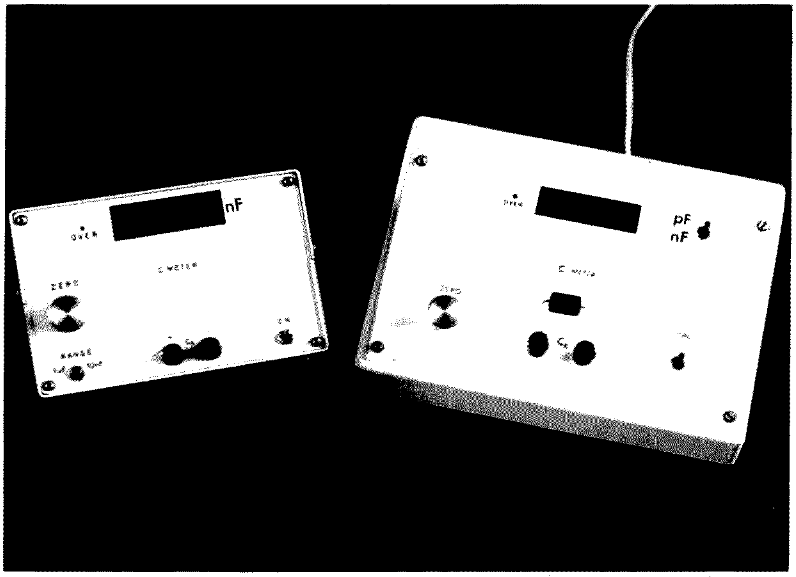

Two versions of the C-meter.

Get the buffer stage to work one hundred percent – this is probably the only difficult part of the whole instrument . . .

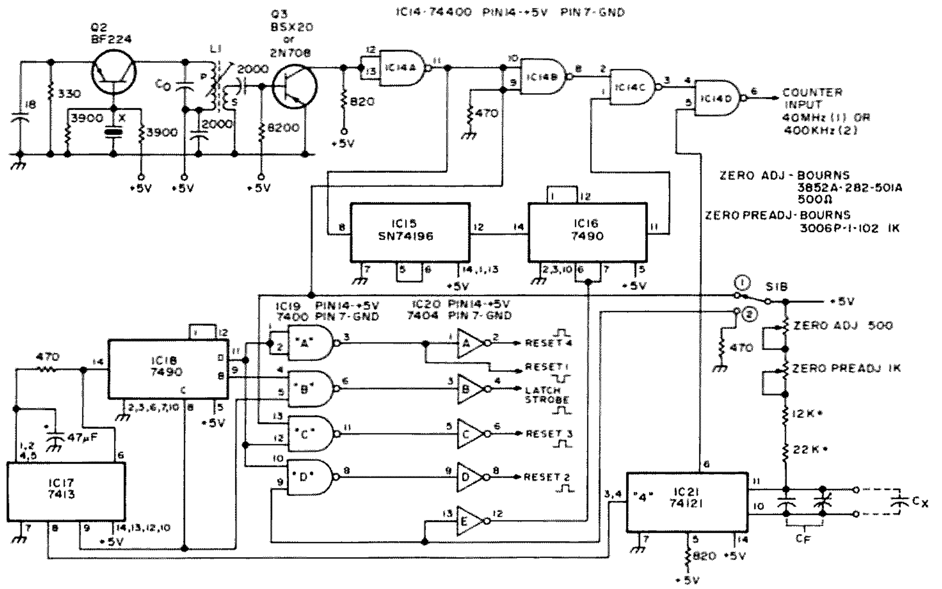

Fig. 3.

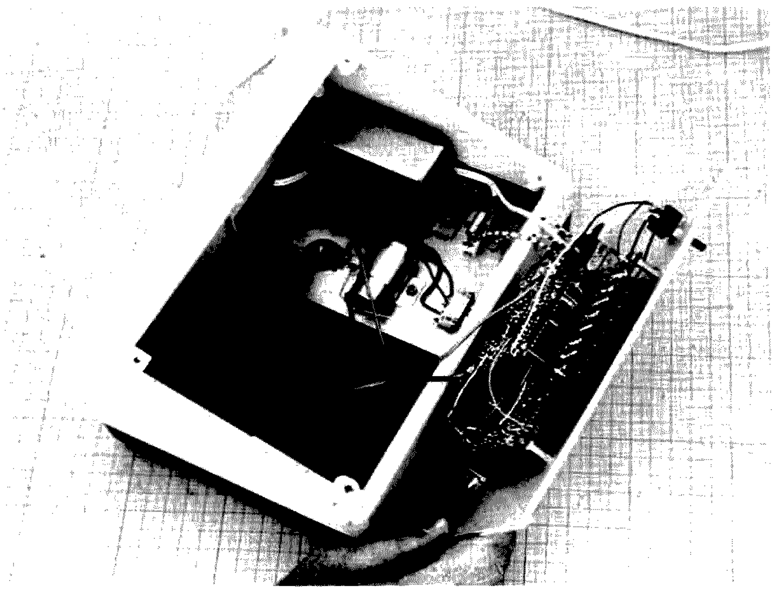

Inside view of the C-meter in the plastic box.

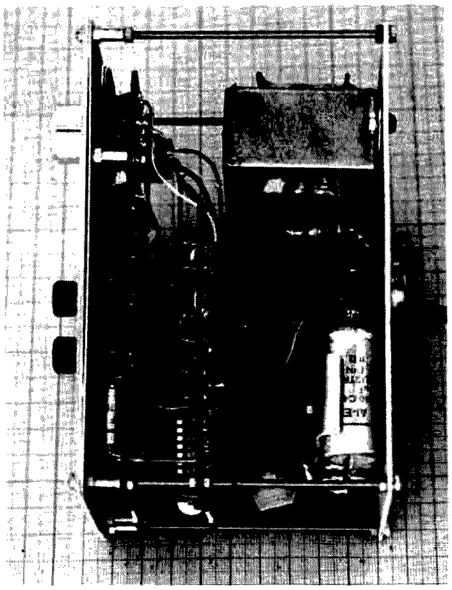

Inside view of the C-meter in the metal case.

For range 2, the Reset 2 pulse must be positive. Switch S1B is in position 2 and gate IC19D is open, while IC19C is blocked and the Reset 3 output is logical "0".

Power Supply

The last part of the C-meter is the power supply. It is very simple, thanks to IC22 (MC7805CP). This integrated circuit has built-in overcurrent and thermal protection and is a very good buy for the money. The output voltage should be very close to +5 V (according to the specifications ± 0.2 V, but I have not found any worse than ± 0.1 V). It is rated for 750 mA minimum (short circuit current limit) and this value just suits our requirement (about 700 mA with display "8888"). The typical input-output voltage differential of the MC7805CP is 2 V, but to be on the safe side I used 8 V ac. With a large smoothing capacitor the input voltage is over 9 V dc. Do not try to go under this value (at nominal mains voltage); otherwise, when the mains voltage drops, you are in trouble.

A small capacitor across the output improves transient response. The connection between the 5000 uF and the input of IC22 should be as short as possible. Use heavy wires – they eliminate voltage drops and improve stability.

To suppress spikes from TTL integrated circuits, it is essential to connect a few capacitors of 0.1 uF and 50 or 100 uF tantalum at intervals on both printed circuit boards. The 0.1 uF capacitors are Siemens, type B32540-A3104-J metalized polyester. Their advantage is very low inductance, but even the ceramic disc capacitors will do the job. Be careful about the polarity of tantalum electrolytics; I was not – fortunately the MC7805CP has good protection.

By the way – the IC22 regulator needs a heat sink to dissipate about 3 W. A small piece (100 x 100 mm) of 2 mm (approximately 14 gauge) aluminum is more than adequate; if a metal box is used, just mount the regulator on the rear side of the box.

Construction

Mechanical construction is probably the weakest point of most of the amateur equipment. Not everybody has a well-equipped mechanical workshop. I built two C-meters, each one of different construction. I hope that will give you enough inspiration.

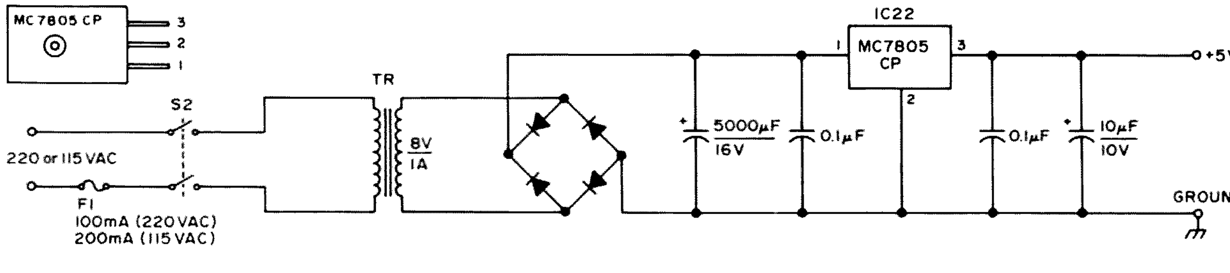

Fig. 4. Note: MC7805CP mounted on a heat sink.

Fig. 5. Construction details.

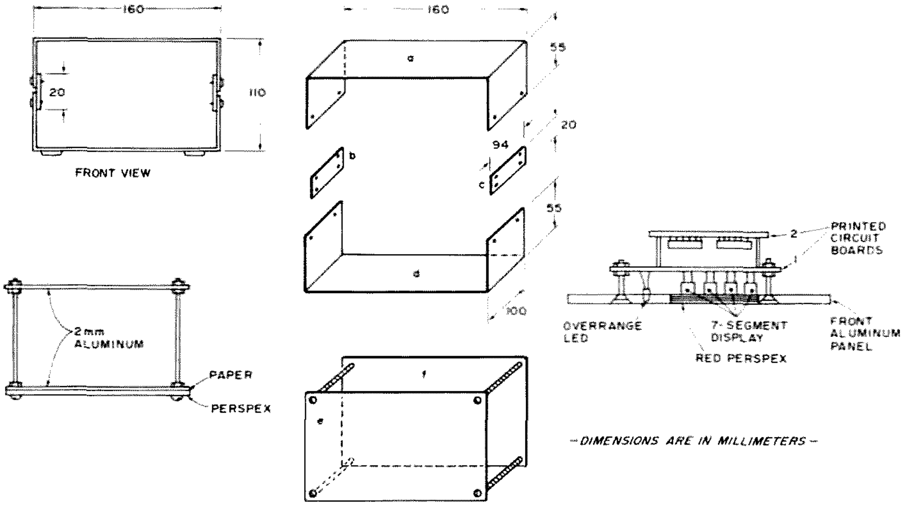

The first prototype was built into a homemade cabinet; the basic dimensions and the general idea are shown in Fig. 5 and the photographs.

U-shaped parts *a* and *d* can be bent in a big vise. The other parts are very simple. Aluminum (2 mm, 14 gauge) can be used for all parts of the cabinet. Start with parts *a*, *b*, *c* and *d*, and then measure the inside dimensions and cut front and back panels *e* and *f* accordingly. (In my case I used steel, and parts *b* and *c* are spot-welded to part *d*.)

The front and back panels are held 94 mm (inside dimension) apart by means of four 4 BA screws 102 mm long. This sub-assembly is then inserted between the two U-shaped parts *a* and *d*. Parts *b* and *c* prevent the front and back panels from moving, and hold parts *a* and *d* together.

After drilling all necessary holes into the front and back panels, clean the front panel and mark all holes with a pencil on a piece of thick white paper which does not change its dimensions with moisture. A white plastic sheet would be even more suitable. Cut off all the marked holes with a sharp knife. Use transfer letters (Letraset or similar) for descriptions of the functions on the panel. Then cut a 1.5 mm thick piece of clear Perspex (Plexiglas) and drill all holes with the exception of the ones for display LEDs and overrange LED. Cut a piece of red Perspex (3 mm thick) which will fit exactly into the hole for the LED display in the front metal panel *e*.

Perspex is supplied with paper sheets glued on both sides. Do not remove these; mark all the holes and outside lines with a pencil and then make cuts with a sharp edge along the outside lines, about 0.2 mm deep. I used the sharp edge of a small chisel (along a steel ruler) with success. Do only one cut at a time. Break both ends of the cut slightly

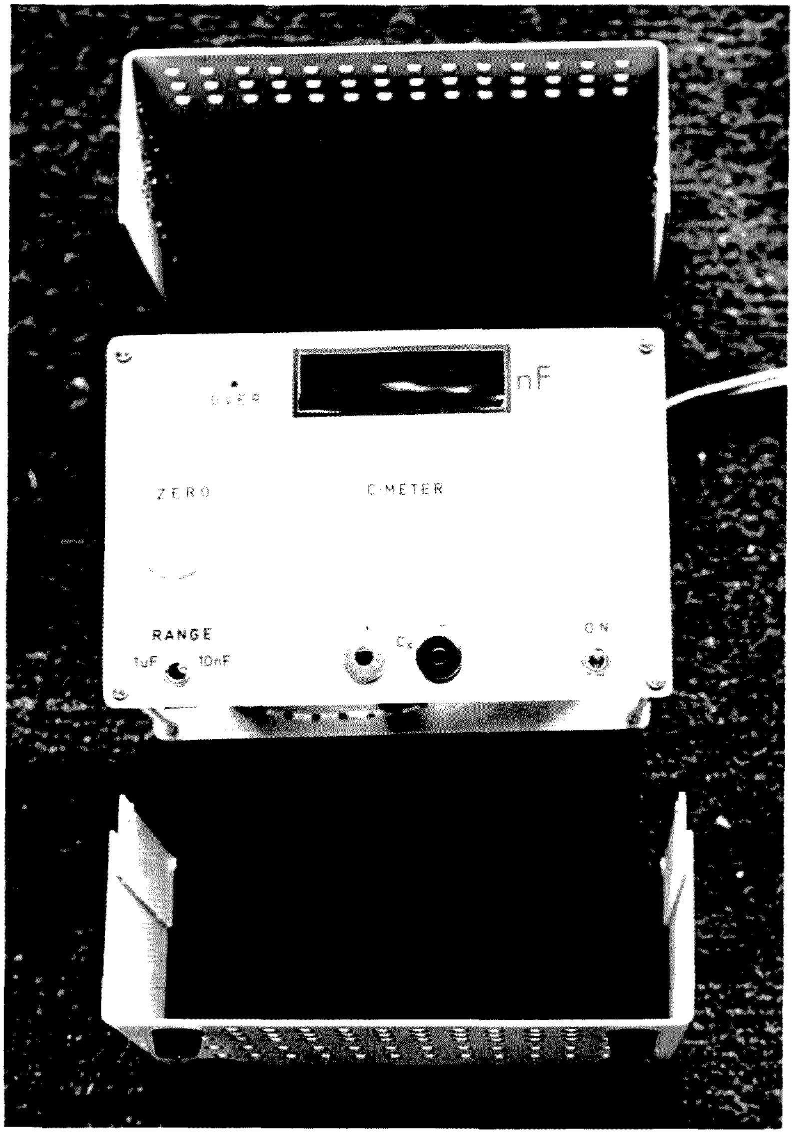

Mechanical construction of the homemade metal case.

The future accuracy of the instrument depends on the accuracy of this 5000-10,000 pF capacitor, so have a good look around for it . . .

with your fingers. Lay the Perspex over the edge of the bench and break carefully. I recommend that you try this procedure a few times on Perspex off-cuts. The operation is not difficult but does require a bit of practice.

Drilling of holes in Perspex is also a little difficult. The best method is to use a drill press with a maximum of 500 rpm. A bit of practice on a piece of off-cut is not a waste of time. Only after drilling all holes, cutting the right dimensions and smoothing the edge with sandpaper should you remove both paper covers and wash the Perspex with soap and water. A front panel made this way looks professional and is really worth the effort.

The printed circuit board with LEDs is fitted parallel to the front panel by means of four screws with countersink heads, so that they are covered with the paper and not visible.

Both terminals for C_X must be made from a good insulator or fitted on a piece of Teflon (PTFE). Perspex tends to absorb moisture from air – a bad insulator will cause erratic readings.

The transformer, IC22 and the 5000 uF electrolytic capacitor are fitted onto the rear panel. Use a small transformer (or increase the depth of the box), so that it does not interfere with the printed circuit boards.

For my second construction of the instrument I used a ready-to-use plastic cabinet with a metal front panel. This is the lazy man's construction and it is, of course, less mechanically difficult. Due to the bigger size of the box, it does not need the cooling holes that proved to be necessary in the previous construction. The construction of the front panel is the same as in the previous case and I hope that the photos are self-explanatory.

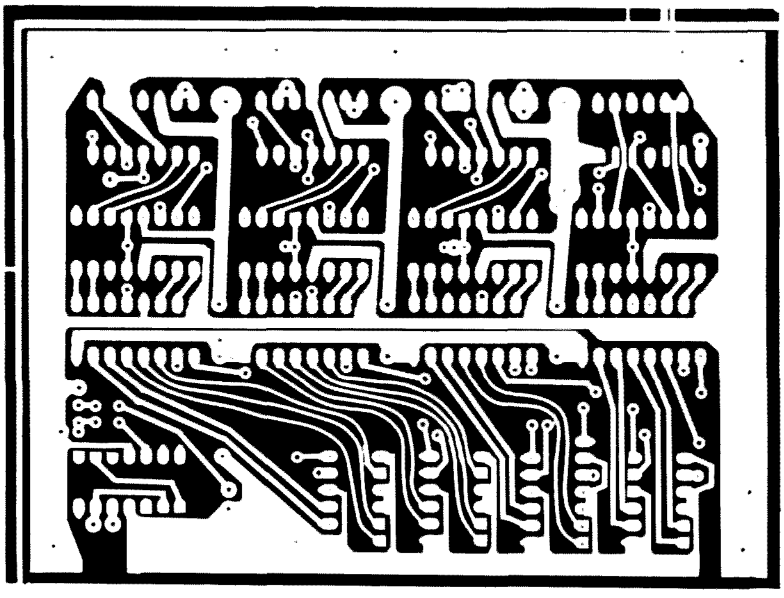

Fig. 6. Counter and display PC board (full size). Copper in white.

Fibreglass printed circuit boards should be well washed with soap and water after etching, rinsed, dried and polished with steel wool. Then spray both boards with soldering varnish and let them dry in the oven. I am sure that your wife will be very pleased with the pleasant smell of the varnish in the kitchen. Anyway, this protection is very important; otherwise, after a few years you might be surprised to find that your C-meter does not work. Only after this procedure can you start drilling the holes into the printed circuit boards. Holes 0.8 mm in diameter are adequate for all components and wires, except the five thick interconnecting wires for the ground and +5 V.

Soldering should be done with a small soldering iron – preferably temperature controlled. Start with the jumpers; a few long ones should be insulated wire, while the others can be bare wire 0.6 to 0.8 mm in diameter. Then solder the components and integrated circuits. Be sure that all integrated circuits are positioned the right way. Do not forget to cut off pin 4 of ICs 2 and 3 (SN7490), before soldering them onto the printed circuit board.

You can test each printed circuit board separately. Use your laboratory 5 V power supply or the one for the C-meter. The current consumption of the frequency counter part with display is approximately 500 mA; of the second part, around 200 mA.

To test the counter subunit, Resets 2, 3 and 4 must be grounded, and Reset 1 must be connected to +5 V. Then connect a square wave generator to the counter input. A circuit of the timing oscillator IC17 (SN7413) can be used (use pin 6 as output). The display will start counting at a random number and will continue to over 9999 and 0000 again.

The second part of the C-meter can be checked with a frequency counter (output from IC14D pin 6). You must, of course, simulate the function of the range switch S1B. Output frequencies (at pin 3 of IC14C) must be exactly at the ratio of 1:100. The latch and reset pulses can be checked with an oscilloscope or, preferably, with a logic probe. The sequence and dependency of the output pulses on the position of S1B was described above.

Alignment

If both parts of the instrument work satisfactorily, solder the two printed circuit boards together. Five thick wires should be soldered onto the counter board; to make

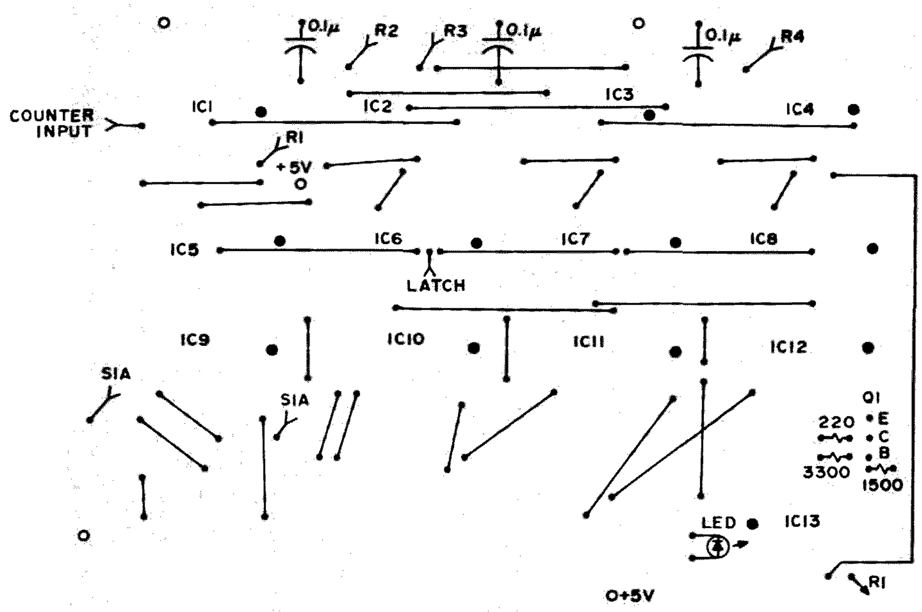

Fig. 7. Component layout, counter and display PC board.

Take advantage of this instrument — it measures with practically full accuracy within a second of being switched on . . .

this operation easier, use differently colored insulation on the interconnecting wires. The same applies to the range switch wiring.

Check the output voltage of the power supply. If possible, load it with a 6.8 Ohm resistor to check if the output voltage is stable. This checking is important, as any voltage over 5.25 V can damage some integrated circuits. Then check the current consumption of the whole unit. It should be under 0.75 A. If everything is OK, you can start with alignment.

Set "Zero Adj" (ZA) and "Zero Preadj" (ZP) to the center positions. Solder a few (2 or 3) capacitors, which are stable with temperature, across the C_X terminals (inside the cabinet). I used plastic molded silver mica and polystyrene without serious problems. In parallel, solder a small mica trimming capacitor (20 to 50 pF). The total value of all of them should be about 980 pF. They form capacitor C_F.

The difficult problem here is to get hold of a very accurate capacitor whose value is between 5000 and 10,000 pF. The future accuracy of the instrument depends upon the accuracy of this capacitor. So have a good look around for it. Note that either input terminal is grounded. Of course, the one marked "+" is not very sensitive to hum, etc.

With no capacitor C_X you should be able to adjust the instrument to show zero on the display, with the values of resistors 12k* and 22k* next to ZA and ZP. But if you used a crystal of a frequency lower than 40 MHz, these resistors will be slightly higher in value (say 33 and 10k) and vice versa. By the way — they must again (like ZA, ZP and C_F) have a very low temperature coefficient. It is best to start with ordinary resistors and replace them, after finding the right values, with high stability ones.

Anyway, adjust zero with ZP, and then connect the precise capacitor C_X. If it reads low, adjust capacitor C_F to the lower value.

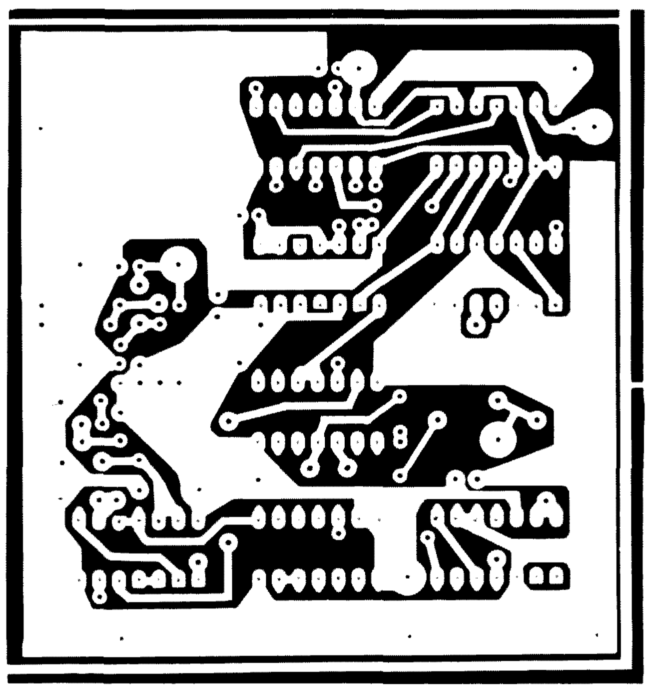

Fig. 8. Oscillator, gate and timing circuits PC board (full size). Copper in white.

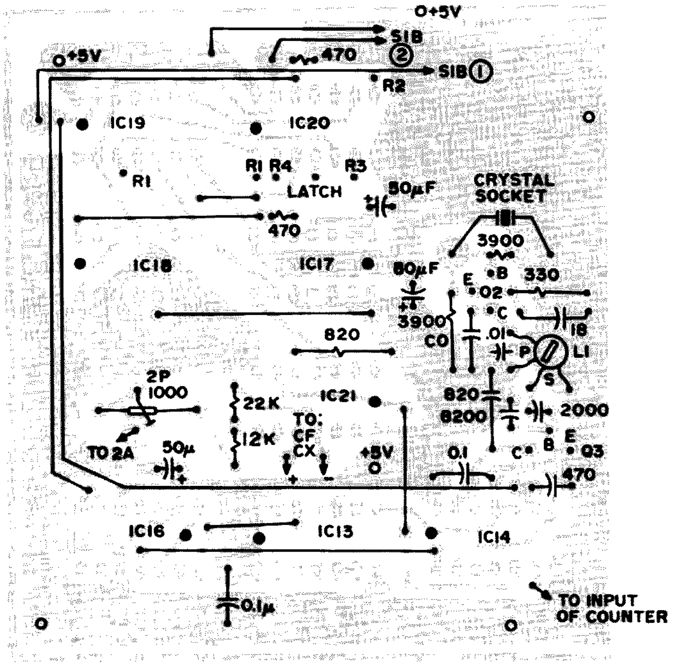

Fig. 9. Component layout, oscillator, gate and timing circuits PC board.

Remove C_X and adjust zero with ZP (changing 12k* and 22k* if necessary). Try it again with C_X and adjust C_F. Remove C_X and adjust the zero with ZP. (Basically, when the display shows a low value, you must lower the value of C_F – and vice versa.) Continue in this way until the display shows zero without C_X and the right value with C_X. During this procedure ZA is adjusted to the middle position. And that's it. Now you can take, say, twenty mica or polystyrene capacitors 200 to 500 pF, measure each one of them, mark the value and add them one after another in parallel on the terminals of C_X. The difference in total readings should at any point be not more than ± 2 digits. If more, then the insulation between terminals 10 and 11 of IC21 (MMV) or between terminals C_X is bad and must be improved.

This procedure, of adding measured capacitors in parallel, demonstrated the excellent linearity of the SN74121 MMV. Originally, when I started the construction of this instrument, I did not expect such good results. It is really amazing how these small plastic 14- and 16-legged spiders perform.

The higher range 2 does not need any alignment, as it is automatically OK when the lower range 1 is adjusted.

Conclusion

Inside the cabinet, the integrated circuits, display, IC22, etc., dissipate over 5 W. Certain crystals tend to be unstable at the high temperature which can develop when the instrument is switched on for a long period of time. In this case, I recommend that you drill a lot of small holes in the top and bottom of the cabinet in order to allow air to circulate along the printed circuit boards.

Take advantage of this instrument – it measures with practically full accuracy within a second of being switched on. Just adjust the zero by means of ZA (with range switch in position "pF," even when measuring in the nF range) and connect the capacitor across the terminals C_X. If you measure a lot of capacitors, check the zero from time to time, as it drifts slightly with temperature.

The overrange flickers when you exceed the range. This is much better than a steady signal.

If you are measuring solid tantalum capacitors, connect them with the correct polarity at terminals C_X. The polarizing voltage across these terminals is about 3 V dc. This low voltage limits accurate measurement to only low voltage electrolytic capacitors.

If the reading is not stable and changes by more than ± 1 digit, then there is something wrong with the capacitor and you would do best to throw it away. ■

The Computer QSO Machine

by
B. D. Lichtenwalner W1HAB
29 Michael Road
Stamford CT 06903

If you have ever operated RTTY for extended periods, I expect you have tired of repeated typing of your call in RTTY, then had to send your call in CW. You also included a time and date print on those special RTTY contacts that could help you toward WAS or DXCC. Were you slowed down in that contest when time was a required part of the text? Here is a small, easy to build circuit that will give you the ability to print the time and date, and sign your call all at the touch of a button.

During 1972 I became very interested in RTTY operations. Shortly thereafter my interests expanded to autostart operations. I was particularly interested in the automated devices that were operational at some of the stations such as WRU Answer Back (Who Are You – a short message sent when a station is called up with a pre-set access code) and Relay Systems. There were a few systems operational that printed the time and date of each WRU or Relay request.

As a result of seeing what was available I started designing a station control unit. First came an electronic "stunt box." Then a WRU using a Model 15 TD and finally a relay system with a well used FXDR. That time/date readout still held my interest – to be able to know when my station had responded to someone's request was a desired goal. Also a time/date printout would provide automatic logging of both received and transmitted messages.

The DDTMG (Digital Date/Time Message Generator) would provide the following functions:

–A programmable message generator using ROMs
–A time readout
–A date readout, with automatic updating – not manual
–A CW generator to meet legal requirements for CW identification

The circuit design would have to use available TTL circuits and would have expandable capabilities for tieing into a complete system approach, using a stunt box electronic equivalent for control.

The circuit consists of the following four basic elements: an electronic clock/calendar, a parallel to serial converter, a memory bank made up of read only memories (ROMs), and a translator/de-multiplexer to convert the output of the clock to Baudot code.

The digital clock is a straightforward application of one of the medium scale

ADDRESS	00000 00001 00010 00011 00100 00101 00110 00111 01000 01001 01010 01011 01100
BIT	01234567012345670123456701234567012345670123456701234567012345670123456701234567012345670123456701234567
CODING	0000 111 1 1 1 1 111 111 1 111 111 111 111 1 1 1 1 1 111 111 1 1 1 1111
CW	BLANK — • • • • — — • — — — — • • • • • — — • • • BLANK RESET

Fig. 1. CW message memory for "DE W1HAB." Sending "DE W1HAB" with a blank address before and after the CW message requires 13 positions of the 32 position chip. The first bit could have been loaded starting at any address within the 8223.

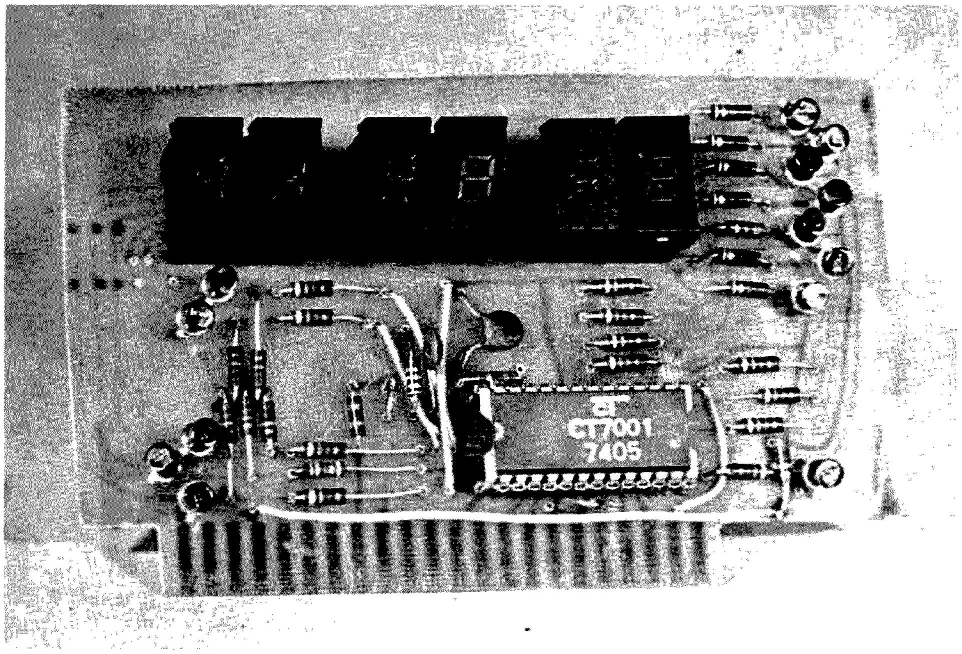

The circuit board used for the digital clock. This portion of the project alone is a useful accessory to the shack. The seven transistors in the upper right corner are current amplifiers for the segment lines, the five transistors on the left and one in the lowering right hand corner are the digit select drivers. Molex pins were used to make up the socket for the CT7001.

integration chips currently on the market. The chip develops all the necessary information to indicate both time and date. The 7001 chip also has a built-in backup oscillator that will allow the chip to maintain the proper time even if ac power is interrupted. A battery supply is needed to obtain the necessary operating voltages, however. In normal operation this chip displays time for 8 seconds then switches to date for 2 seconds. Provisions are made within the chip to force display of either time or date as requested. This is an important feature for operation of the DDTMG.

The clock uses internal circuitry to keep track of the month. It also keeps track of how many days will need to be counted before advancing the month counter. February 28 always advances to March 1, except the designers of the chip allow February 29 to be set manually into the counter for leap year. This is only 1 day in 4 years when manual setting of the clock will be required.

The 7001 chip is designed to drive either 4 or 6 seven segment LED readouts. The first 4 LED readouts indicate hours/minutes or months/day. The fifth and sixth digits are used in time mode only and indicate "seconds." The "seconds" digits are not used in the Baudot converter. Information is taken from segments A, B, E, F and G to feed to the Baudot converter. Signals indicate which digit is being strobed, and are required by the de-multiplexer.

The circuit shown has driver transistors on the segment lines to provide additional drive to the LEDs. In the first version of the clock the LEDs were not bright enough to suit me so this slight addition was made. This portion of the project can be built as a stand-alone electronic clock and would be a great addition to most shacks.

Parallel to Serial Converter

The function of this unit is to take parallel information from the memory bank and present it in serial form to the RTTY

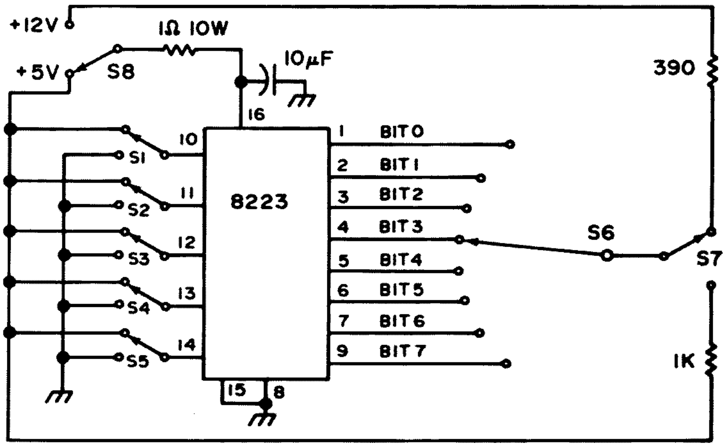

Fig. 2. 8223 programmer. Circuit source: Signetics Data Book, *1974, pages 4-11.*

loop. The basic timing pulses come from a U12. This unit has components selected to operate at 91 Hz. U20A gates the pulses from the generator to a set of frequency dividers consisting of U1, U2 and U3. The output of U2B and U3 are connected to an 8 line to 1 line multiplexer, U4. This approach was used by K4FUP and W4VWS in their message generator 1. This circuit will take the data presented to the input pins and will in sequence place successive bits on the output line to be fed to the RTTY loop for keying. The speed at which data is fed from the multiplexer is selected by section one of U9. For RTTY the output pulses are each 22 ms. For CW mode the two additional dividers are inserted in the divider chain by the switch action of U9. The speed is selected by the control line from the CW control latch (U17C and D). Each CW element will be 88 ms long. If the printer is left in lower case his speed will print a rather neat-looking string of 0s across the page as the CW ID is sent.

Sections two, three and four of U9 act as data switches to the multiplexer, chip U4. Their function is to force the start bit of each character in RTTY mode to a space, and to force the stop bit to a marking condition in RTTY mode. In CW mode information bits 0, 6 and 7 from the memory bus are switched to the multiplexer.

The circuit is placed in run mode for RTTY by actuation of RTTY run latch consisting of U17A and B. The start signal can be any negative-going pulse that reaches a level below 0.8 volts. This can be a switch closure as shown, a transistor (NPN) or a signal from some external TTL circuit.

U17C and D are similar to the RTTY run latch. Interfaces, similar to the RTTY run latch, are used for turn on. This latch when turned on will reset the RTTY latch. Provisions are made for resetting of this latch, as well as the RTTY latch from an external signal. The CW latch being turned on will fire the single shot, U5, that will allow a pre-wired address to be loaded into the memory address counter. This procedure will be explained later in the memory section.

The five data bits that represent the Baudot characters that are to be sent to the serializer, U4, are run through a five pole double-throw electronic switch consisting of

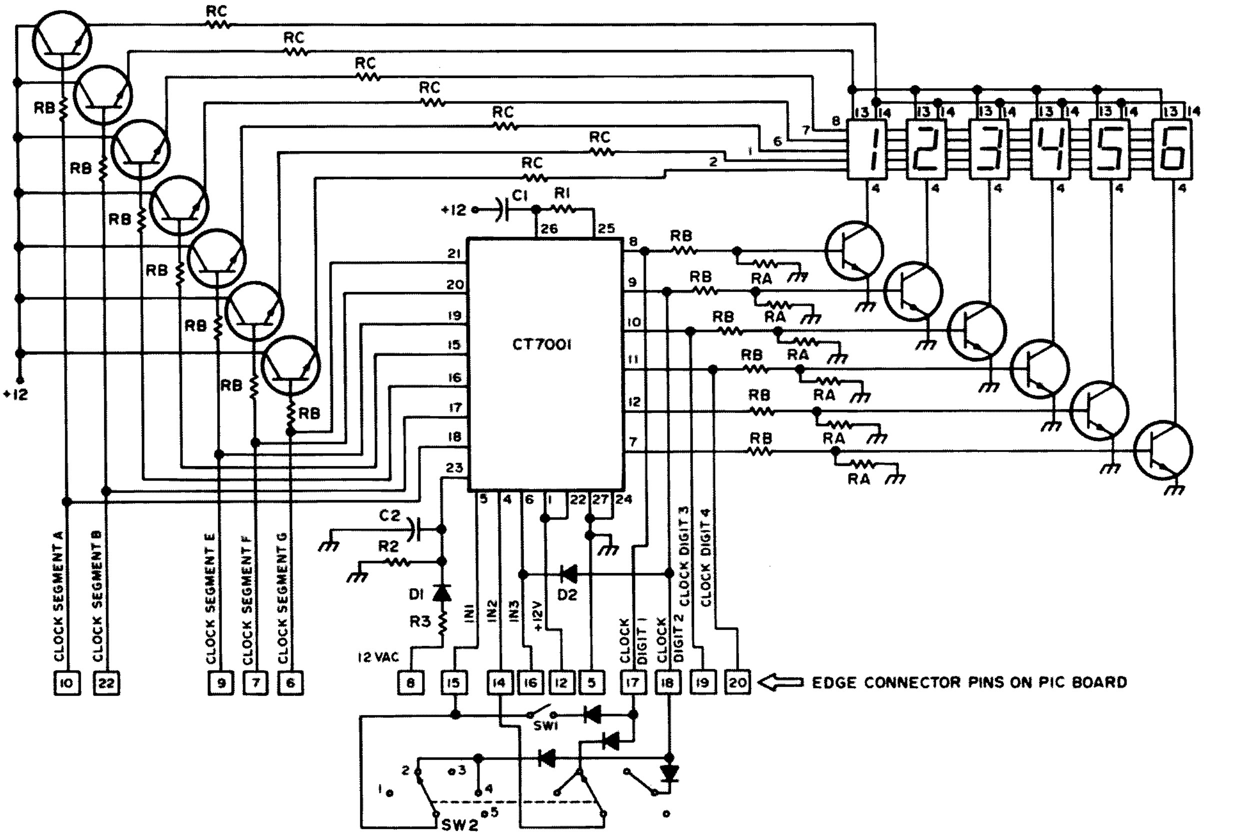

Fig. 3. Digital clock with display. Note: Pins 1, 2, 6, 7, 8, 13 and 14 from each LED readout are connected in parallel. LEDs: 7 segment, common cathode. SW2 position functions: 1 — set calendar, day; 2 — set calendar, month; 3 — set clock, minute; 4 — set clock, hour; 5 — run.

S5	S4	S3	S2	S1	DECIMAL EQUIV.
0	0	0	0	0	0
0	0	0	0	1	1
0	0	0	1	0	2
0	0	0	1	1	3
0	0	1	0	0	4
0	0	1	0	1	5
0	0	1	1	0	6
0	0	1	1	1	7
0	1	0	0	0	8
0	1	0	0	1	9
0	1	0	1	0	10
0	1	0	1	1	11
0	1	1	0	0	12
0	1	1	0	1	13
0	1	1	1	0	14
0	1	1	1	1	15
1	0	0	0	0	16
1	0	0	0	1	17
1	0	0	1	0	18
1	0	0	1	1	19
1	0	1	0	0	20
1	0	1	0	1	21
1	0	1	1	0	22
1	0	1	1	1	23
1	1	0	0	0	24
1	1	0	0	1	25
1	1	0	1	0	26
1	1	0	1	1	27
1	1	1	0	0	28
1	1	1	0	1	29
1	1	1	1	0	30
1	1	1	1	1	31

(ADDRESS: S5–S1)

Fig. 4. Addressing sequence for 8223 memories. 0=0 volts; 1=+5 volts.

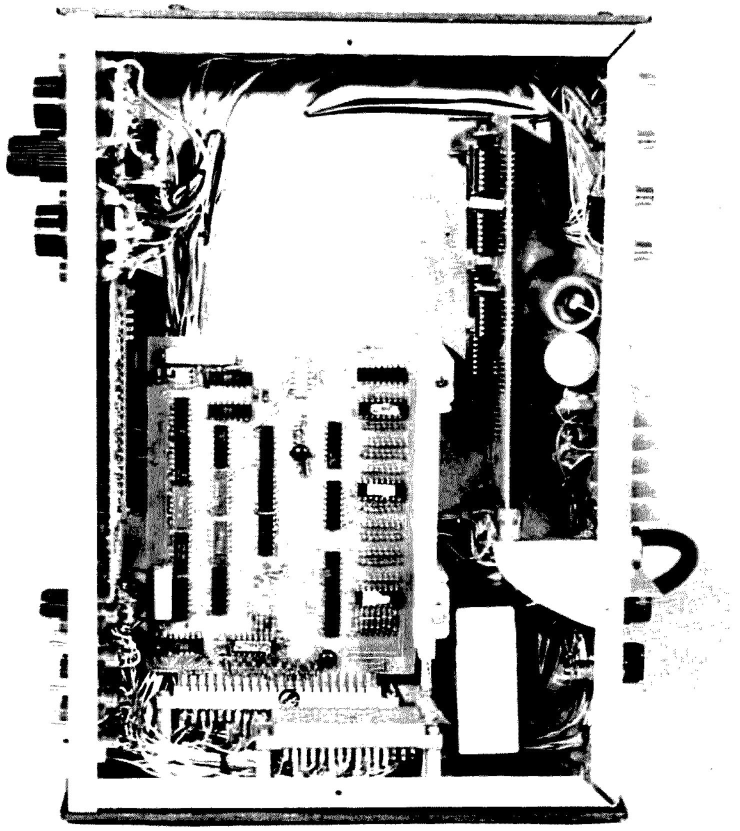

Inside view of K1ZPX cabinet. The circuit board for the clock is shown edgewise toward the front of the cabinet. The main DDTMG board is shown supported by a card guide toward the back edge. The vertically mounted board toward the rear is the timing board for the UT-4. The sockets above the DDTMG are for the other UT-4 boards. Power supply for both units is built on a small board fastened to the back of the unit.

U10 and U11 A and B. This switch is controlled by U18B, a circuit that recognizes if data should be coming from the memory or from the digital clock circuitry. More on this later.

Memory Bank

The memory bank consists of up to 8 read only memories that can contain up to 32 RTTY characters in each memory, or a CW message. The typical CW ID message used for RTTY, consisting of DE and station call, takes approximately one half of a memory chip.

The key to any memory system is in knowing where data is located. This information retrieval scheme is known as "addressing." The "addressing" scheme for this circuit consists of two 4 bit counters U6 and U7. U6 and U7A are used to address the control lines on the 8223 ROMs. The particular 8223 that is to be selected is enabled by the output of the proper line from U8. This circuit converts the binary count of U7B, C and D into a one out of eight activated line.

The RTTY message will begin at address 00000000, the address that is forced into the counter at the start of each RTTY message. The CW message can be loaded at any convenient address, preferably at a high address in the scheme. That starting address of the first character of the CW message is "wired" to the input lines of the counter. For my generator the CW message is contained in the last chip in the memory bank, so starts with address 11100000. To place this address into the address counter the preload pins of U6, A, B, C, D, U7A are "wired" to ground. The preload pins for U7B, C and D are "wired" to plus 5 volts through a 1k resistor. When the CW message latch is turned on, U5 fires and loads the "wired" address into the counter. The preload pins have been brought to the edge connector of the circuit board used for this project for ease of wiring and to allow later expansion of control circuitry to increase the flexibility of this unit.

The output of the memory bank will be used 3 different ways. First, bits 1, 2, 3, 4

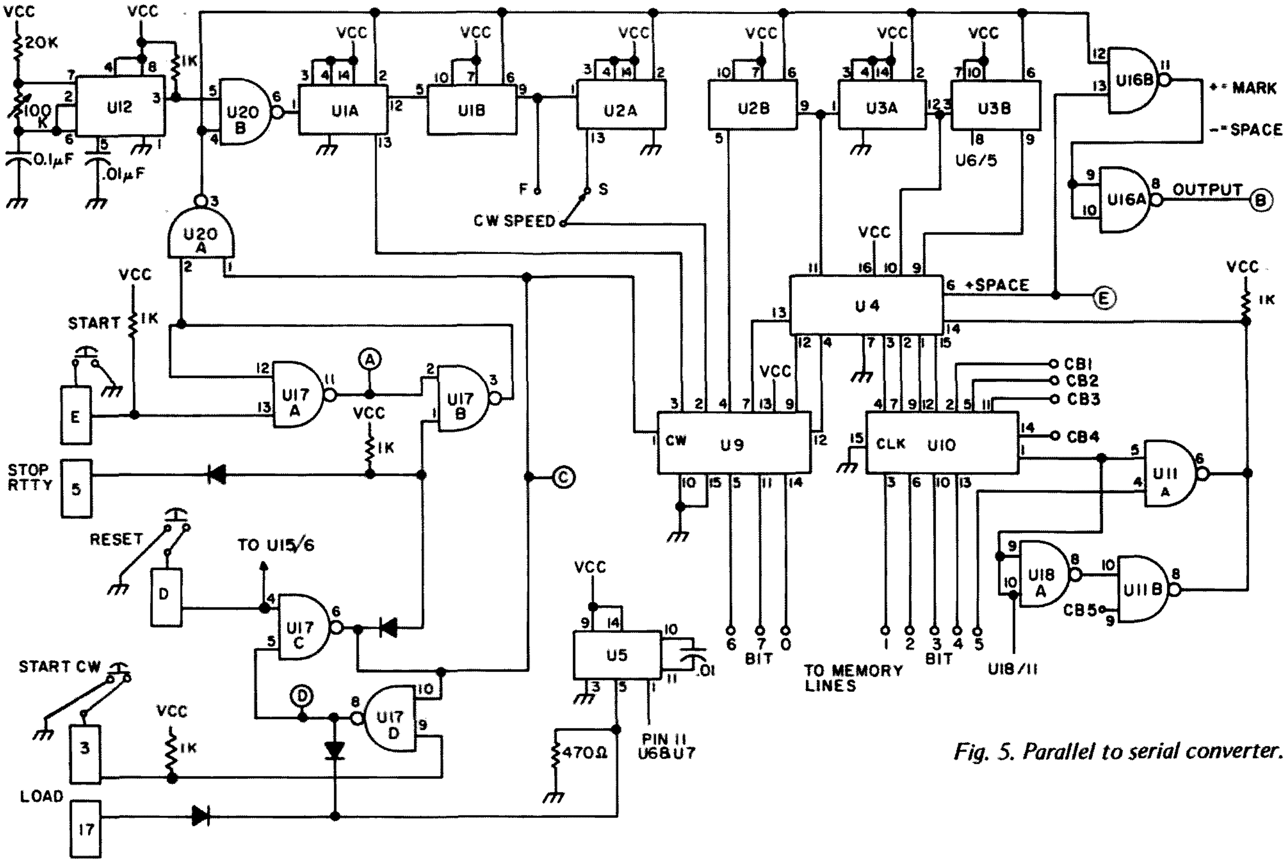

Fig. 5. Parallel to serial converter.

and 5 will be used to indicate the RTTY message to be sent. Second, all bits will be used to encode the CW message; and third, in RTTY mode when bit 0 is coded as a "1", the memory will be used as a control function generator. Also, if bits 6 and 7 are "1"s when in the RTTY mode, the generator will change to CW mode and load the "wired" address into the address counter indicating the starting address of the CW message. When in CW mode the recognition of bits 3, 4, 5 and 6 will indicate the end of the CW message. These end sequences are recognized by U21 and U15 respectively.

Translator/De-Multiplexer

The function of this circuit is to select the proper digit from the digital clock, translate the seven segment code (only five segments used in the translator) for that digit into RTTY Baudot code, place it into latches and switch it onto the serializer input lines. Let's look at what the circuit does to accomplish these functions. To signal the circuitry that a RTTY character is required from the clock, bit 0 in the memory is coded as a "1". U18B combines the plus on the bit 0 line and the RTTY latch being "on" and forces the switch U10 to take its output from latches U14 and U19. The information that is resident in the latches comes from the translator U22. The translator is available from Kelly Associates.*

The clock segment information is being changed at better than 100 kHz for each of the digits. To determine when the proper digit is available at the output of the translator, U22, we need to look at a bit more of the control circuitry. Again, in the mode of operation when the clock information is to be sent, the memory bank is being used as a control memory. As a result, the data from the memory that is usually sent to the serializer is "unhooked" since U18B has detected that we want a digit from the clock/calendar. To tell us which character is required, bit lines 1, 2, 3 and 4 are used to select which clock character will be gated to the latches U14 and U19. Let us see how the circuit operates. First, we decide that we want to "print" digit 1 from the clock. (This is the tens position of the hour or month.) We code bit 0 and bit 1 in the memory as a "1". U20C will now have pin 13 positive. When clock digit 1 (from the digital clock) goes positive, indicating the information on the segment lines is the data for digit 1, the output of U20C goes negative, forcing the output of U13 positive and firing the single shot, U30. This "opens" the gate on U14 and U19 and allows the data that is on the

*Kelly Associates, P.O. Box 2100, Glenbrook CT 06906.

output of U22 to be placed into the latches. Once this data is loaded, it is available for serializing through U4. The other digits are selected in a similar manner by gates U20D and U18C and D.

There are two additional sets of circuits that make the interface work properly. First, let's see how we select either time or date. Since digits 1 through 4 can be either time or date, the select circuits U20C and D and U18C and D are used for both outputs. The real trick is to force the clock circuit into either time or date mode as required for your printout. To do this we use a pin on the clock chip called IN3. If this pin is driven plus at digit 3 time, the clock will display time. If driven plus at digit 4 time, the date will be displayed. If you want to display time, code bit line 6 as a "1". This line being plus along with clock digit 3 being plus will gate U11C and its output will go negative. When it does, up goes the input on IN3, and up comes the time. Bit 7 does the same thing for date. To keep the clock from really showing funny numbers during a CW message when bits 6 and 7 are used as data bits, Q2 was added to make sure the output to IN3 would stay at ground potential.

To be able to set the last digit of the year for the readout the U16D circuit was added. When you want to print out the last digit of the year, place bit 0 and 5 at a "1" level. This forces the data to come from latches U14 and U19. However, bit 5 deactivates the translator U22. Instead of translating a character from the digital clock, all input lines to U14 and U19 will go plus. To input data, the output of U16D is connected to the bits required to represent the digit required. For 1975 the "5" is coded by connecting a diode as shown between the U16D output and the input to the 5 bit latch. For next year when a 6 is needed, diodes will be required between bits 1, 3 and 5. The first digit of the year data must be coded in the 8223 memory.

The input of the data from the clock is translated to TTL level signals with a resistor network consisting of a 2.2k resistor in series with a 1k resistor and taking the signal from the junction. This design is not optimal for the design criteria for TTL logic, but has worked very successfully in this circuit.

The output of the circuit is interfaced to the ST6 with a very simple circuit. The output of U16A is run to an NPN transistor

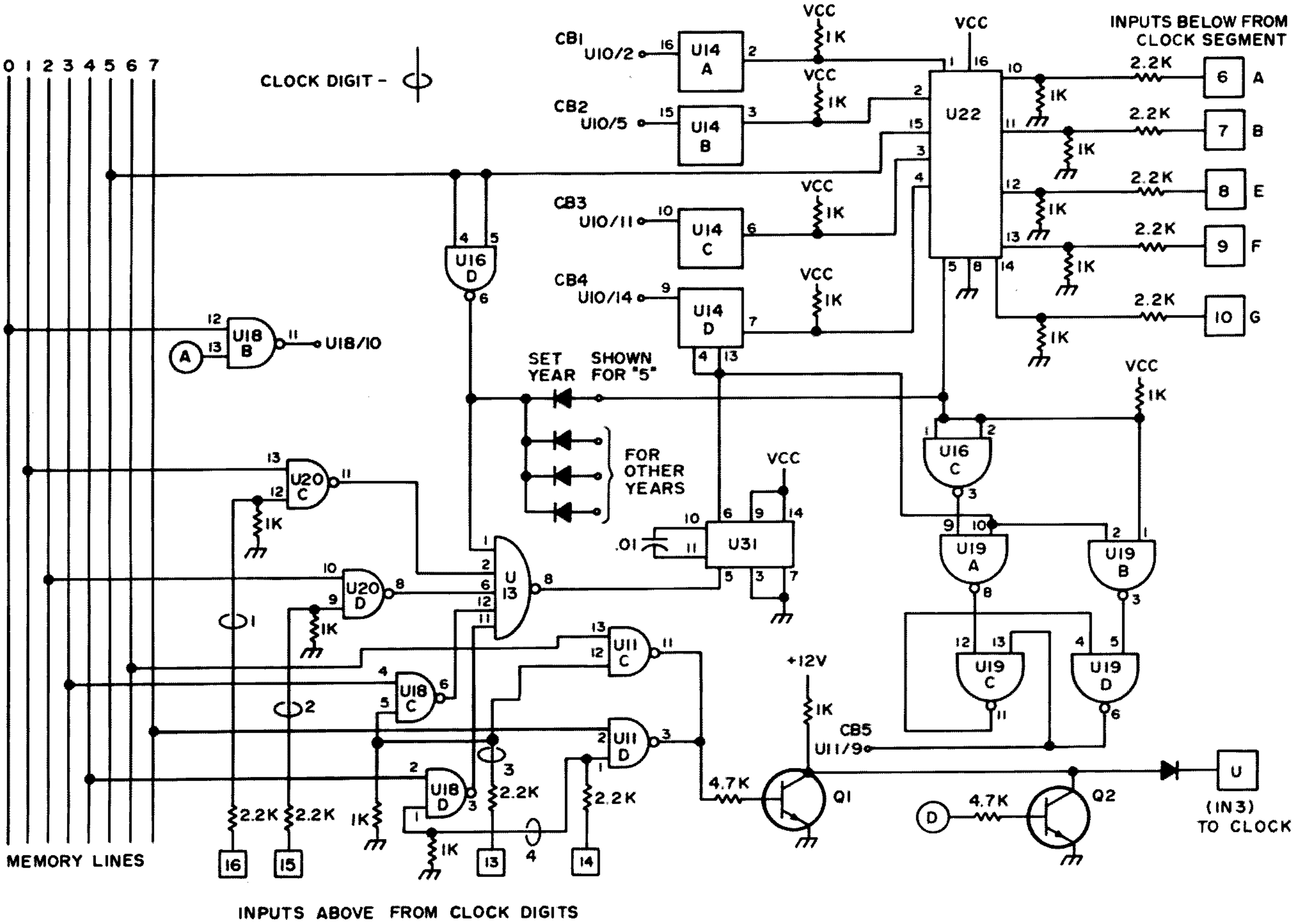

Fig. 6. Translator/de-multiplexer.

with a 4.7k resistor in series with its base. The collector circuit is connected to the base of the loop-keying transistor. Works every time.

Power Supply

The DDTMG requires a power supply that can deliver 5 volts at 1 Amp and 200 mA at 12 to 18 volts. The 5 volts requirement is best met by using the very conveniently packaged LM309K. Be sure to attach the LM309K firmly to the cabinet to aid in dissipating the heat from the circuit. A small U-shaped fin would also help to keep the unit cool. Diodes DX, battery BT and resistor R1 in the power supply can be eliminated. These components allow the clock chip to continue operating should ac power fail. The battery will be charged whenever the ac power supply is operating. It is advisable to check the current flow into the battery when fully charged to assure yourself that it is not exceeding 1 or 2 mA when the nicad batteries have reached full charge. Adjust R1 to set this current level.

Programming the 8223 Memories

When unprogrammed 8223 ROMs are purchased, all of the outputs will be at a "0" level. A small programming fixture as shown in Fig. 2 is all that is required to program these units. To program the ROMs I use the following procedure as outlined in Signetics Data Handbook.

1. Ground pin 8, and remove Vcc from pin 16.
2. Remove all output loads.
3. Ground the chip enable line, pin 15.
4. Address the location to be programmed by selecting the address using the five SPDT switches. For address 00000 all switches will be at the ground level. Address 00010 would be selected by placing switches 1, 3, 4 and 5 at the ground level and switch 2 at the plus 5 volt level. In the addressing scheme, bits are addressed from right to left. The right most bit represents the least significant bit in the address and the left most bit represents the most significant digit. The table in Fig. 4 shows the sequence of addresses and their equivalent decimal value. Remember when programming a sequence of characters, the order of message must start in the least significant position of the memory and be located in increasing addresses.
5. Apply plus 12 volts to the pin to be programmed through a 390 Ohm resistor. One bit is programmed at a time. The bit to be programmed is selected by switch 6. This technique will be applied only to those pins that must be at a "1" level at the end of the programming process.
6. Apply plus 12 volts to pin 16 for as short a period of time as possible.

Completed clock. This control unit built by K1ZPX houses the DDTMG, a UT-4, the necessary power supply, and switching circuits to select interfaces to several receivers and transmitters.

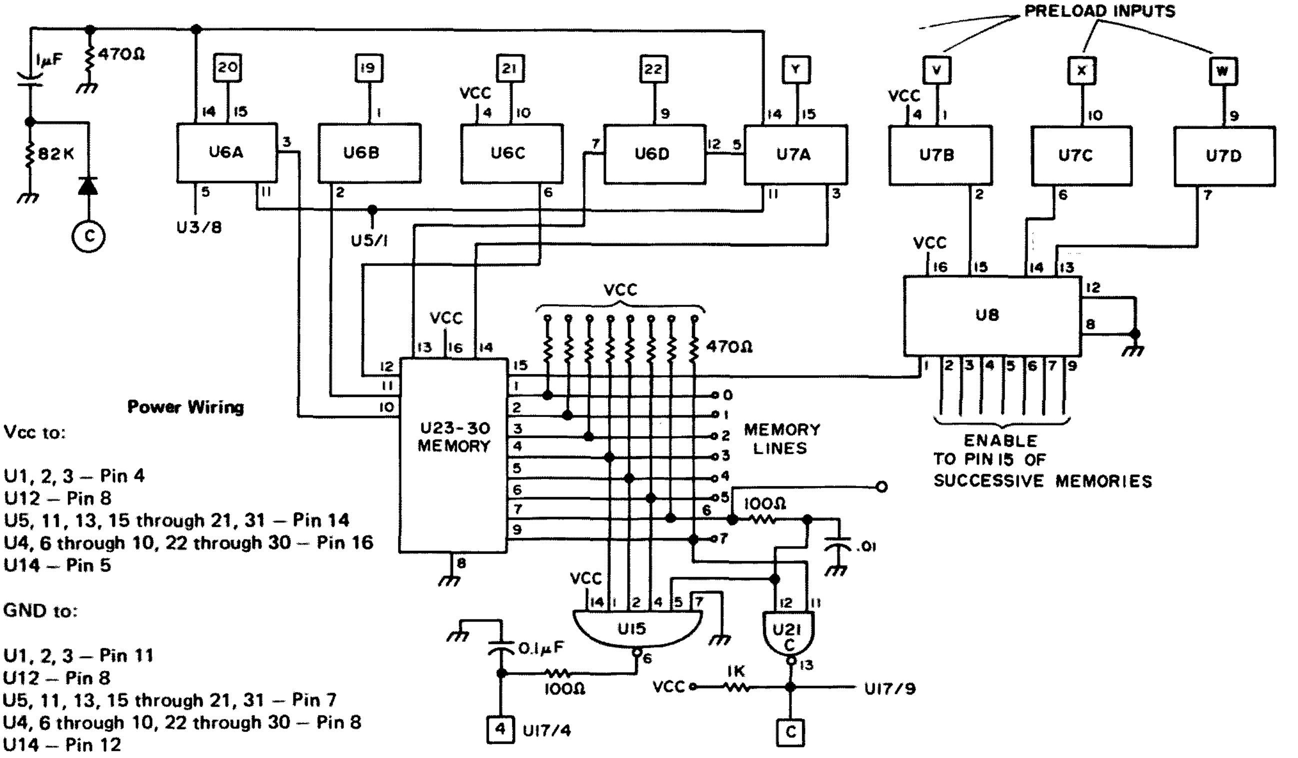

Fig. 7. Memory bank. Note: .01 bypass required for every 4 chips between Vcc and GND. U23 through U30 are 8223s in parallel, with only one shown. Only pin 15 is connected to separate enable lines.

7. Verify that the bit has been programmed by checking the output voltage across the 1k resistor with switch 7 in the verify position.

8. Continue to the next bit to be programmed at this address. When all bits at an address have been programmed and verified, advance the address and program the bit pattern for that address.

9. If during the verification process, a bit has been found to be not programmed, repeat steps above.

This process is quite simple, but requires a great degree of attention. One bit in the wrong position or address and the chip is useless. There is no way of returning a bit to the "0" level once it has been programmed.

If you prefer not to program your own chips, Kelly Associates offers the service of programming to your specifications at a very nominal fee. A self-addressed note to them will bring convenient forms to help you lay out your message.

To prepare the data to be programmed into the memories, we will look at the RTTY message differently from the CW message. All RTTY information will be contained in bit positions 1 through 5. Bits 0, 6 and 7 are used as control functions. As a result it is important to keep these bits 0, 6 and 7 as zeros during the programming operations. The bits will be set at the one level for each space and at the zero level for each mark. The start and stop pulses will not be programmed. They are inserted automatically by U9. Any handbook such as "Ham RTTY" will show the code required.

Let's look at an example. To code the letter "A" into the first address of a memory, we progress as follows. Select the first "address" in the memory. This is represented by address 00000. The Baudot representation of the letter "A" is

MARK MARK SPACE SPACE SPACE.

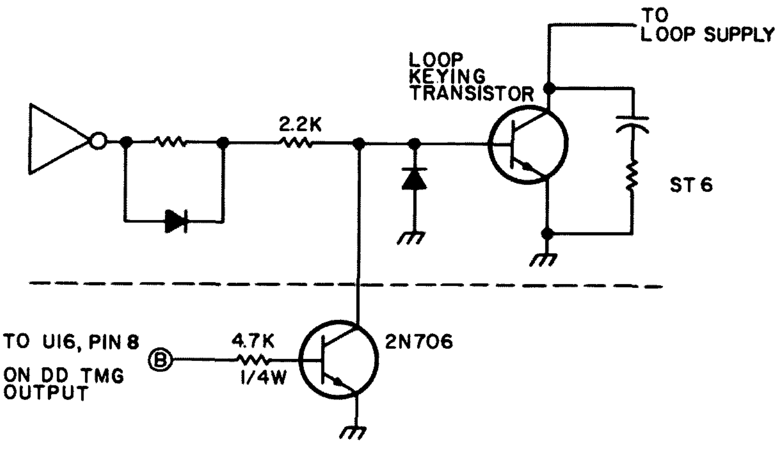

Fig. 8. Interface to ST-6.

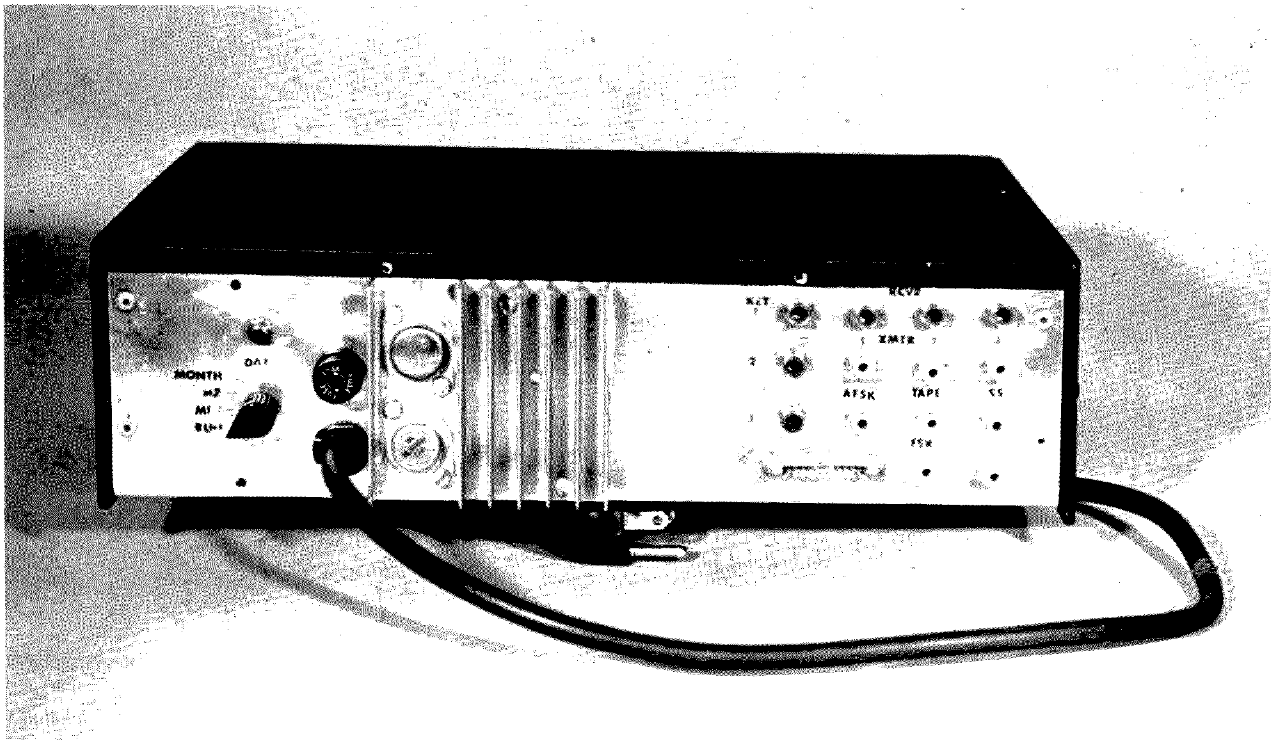

Rear view of K1ZPX DDTMG. The push-button and 5 position rotary switch on the left side of the panel is used to set the time and date on the clock.

This means that in the memory we want bits 1 through 5 to be set as follows:

bit 1	bit 2	bit 3	bit 4	bit 5
0	0	1	1	1

Again, remember bits 0, 6 and 7 will remain at 0 level. After completing the "writing" of the first character, advance the address to 00001 and program that character. Continue advancing the address switches to complete the message.

Programming of the time and date feature requires using the control bits 0, 6 and 7. Let's review what each of these bits controls.

Bit 0 at the 1 level in RTTY mode indicates that the data to be "printed" should come from the clock generator circuit rather than the memory bank. This is accomplished with the switch U10 and U11 A and B. When bit 0 is programmed to the 1 level, bits 1, 2, 3 and 4 select which of the clock characters are to be printed. Bit 1 selects the tens position of the month or hour – bit 2 at the 1 level selects the units position of the month or hour. Bit 3 selects the tens position of the day or minute, and bit 4 selects the units position of the day or minute. Bit 6 programmed at the 1 level will force the clock into the clock mode and bit 7 programmed to the 1 level will force the clock to display the date mode. To "print" the first digit (tens position of the hour) the following character would be in the selected address:

bit 0	bit 1	bit 2	bit 3
1	1	0	0

bit 4	bit 5	bit 6	bit 7
0	0	1	0

To select the digits of the time output, successive addresses in the memory would be identical to the above line except the 1 in bit position 1 would be replaced by A 0, and the 1 would be placed successively in positions 2, 3 and 4. To indicate that a TTY message is ended, bits 6 and 7 are both set to the 1 output.

Programming the Memories for CW

In the CW mode all 8 bits of the memory are used in coding the message. The message is laid out as shown in Fig. 1. Each Morse element is coded as a "1". A dot consists of one Morse element, a dash consists of three Morse elements. Inter-element spaces require one Morse element while inter-character elements require three Morse elements. The spacing between words is equal to seven elements. All spaces are programmed as "0" level in the memory.

The message is started at the address chosen for CW message. Bit 0 represents the first Morse element. I recommend at least

one address (8 bits) be left at the zero level to set off the CW message at the beginning and end of message. The first bit of the message is placed in the bit 0 position. The next element is placed in bit 1 position and so on through the memory. When the bit 7 is programmed, advance the address one count and continue the message starting at bit 0 for that address. Progress through the entire message until the complete CW message is programmed. Then allow at least one full address as blanks (0) level, then code the end of message character. This character consists of the 3, 4, 5 and 6 bits being coded as "1"s.

Construction

The easiest method of construction uses the circuit boards available from Kelly Associates. The plug-in clock and message generator board allow easy building and a great deal of flexibility in housing the circuitry. The photographs show one packaging possibility used by K1ZPX in a complete control console for his RTTY station. The original circuit was developed with hand-wired boards and performed very well. Adequate bypassing from Vcc to ground is one of the secrets in getting TTL logic to work. A .01 uF disk ceramic for each 4 TTL circuits is adequate.

Included in K1ZPX's control box is a Hoff designed UT-4, power supplies for both units and switching circuits to select up to 3 transmitters and receivers. There is one interconnecting cable to the ST-6 that contains all the control signals required for both circuits.

Testing

First, get the digital clock working. This is easy since there is very little circuitry for this unit. The message generator board is not required for this step. Be sure the voltages are proper to the clock. Check out each switch setting to be able to set the time and date and watch it operate. The seconds should reset to "00" when the time is selected for setting. When the setting switch is placed in the run position, this counter should begin counting. When the count reaches 8, the chip should switch to date mode. After two seconds in this mode, back comes the time and the seconds counter should now begin counting at 10. Just one word of caution, the clock chip is very sensitive to static discharges. Don't solder on the circuit board or its interconnections with the chip in the circuit. Take it out and place it in its shipping pad to act as a discharge preventer. Also use a socket for the chip.

After the clock is working, remove the clock board from its socket and insert the message generator board into its socket. With power applied, check the output of the

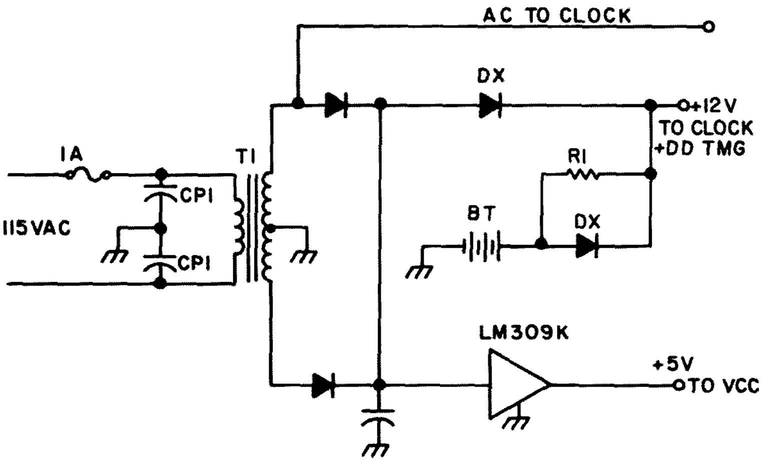

Fig. 9. Power supply, with back up power for clock.

U12 clock and set its frequency at 91 Hz. A counter is best for this, but a scope will do using 60 Hz as a reference signal. Place the CW memory in its assigned location. This location will be consistent with the address "wired" into the address counter preload. The RTTY memory must be plugged into the first position on the memory bank. Pressing the CW start switch should force the address wired into the preload into the address counters U6 and U7. The counter should advance and the CW message should appear at the output pin. When the message is complete, the reset character, bits 3, 4, 5 and 6 at the "1" level will reset the CW latch (U17 C and D) off.

Parts List

Fig. 2.

S1-S5: ADDRESS select switches, SPDT
S6: 8 position, 1 pole rotary
S7: Program/verify switch, SPDT
S8: Program switch, SPDT momentary contact P/B

Fig. 3.

RA: 22k, ¼ W
RB: 4.7k, ¼ W
RC: 220 Ohm, ¼ W
R1: 15k, ¼ W
R2: 27k, ¼ W
R3: 5.2k, ¼ W
C1: 150 pF
C2: 0.01 uF, disc
SW1: SPST mom. con. P/B
SW2: 5 position, 2 pole rotary
All transistors: 2N706

Fig. 5.

U1, 2, 3: 7473
U4: 74151
U5: 74121
U9, 10: 74158
U11: 7403
U12: 555
U16, 17, 20: 7400

Fig. 6.

U11: 7403
U13: 7430
U14: 7475
U16-20: 7400
U21: 7401
U22: DDTMG
U31: 74121

Fig. 7.

U6, 7: 74193
U8: 7442
U15: 7420
U23: 8223
Q1, 2: 2N706
All resistors: ¼ W, 10%
All caps below 0.5 uF: disc ceramic
All caps above 0.5 uF: 12 V electrolytic
All diodes: general purpose germanium

Fig. 9.

CP1: 0.01 uF disc at 600 V
BT: 450 mAh 12 V Nicad
R1: 500 Ohm 2 W carbon
T1: 24 V ac 2 A center tapped
All diodes: 1 A 50 V piv rectifiers

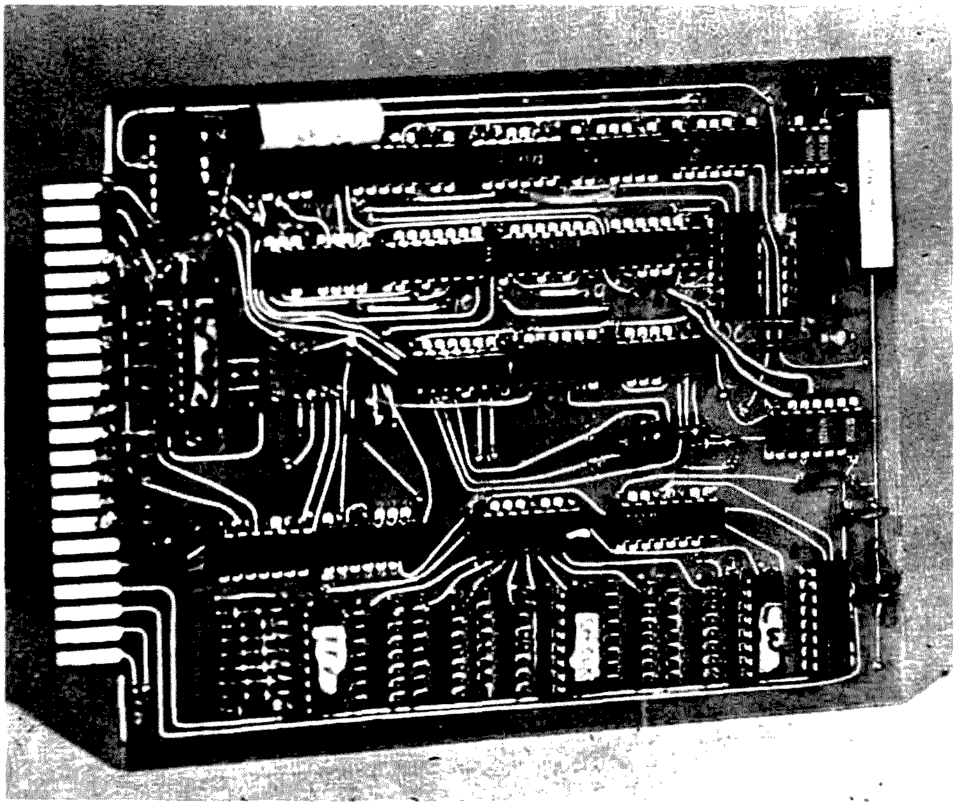

Circuit board for the DDTMG. The pot on the upper right sets the basic timing for all circuit operations. Eight sets of molex pins are used to make the memories plugable across the bottom of the circuit card.

When this circuit is working, it is time to try the RTTY message. With the digital clock removed, the RTTY message should print with blanks in the place of the time and date digits. When the end of the TTY message is reached, the TTY reset character will force the CW latch on and the CW message will be sent.

When the above circuits are checked out, it is time to check out the time/date de-multiplexer. First, using jumper wires, tie the clock digit lines to plus 12 volts. Then select the following clock segment lines and tie them to plus 12 volts. The digit shown should appear:

Seg A	Seg B	Seg E	Seg F	Seg G	Number
1	1	1	1	0	0
0	1	0	0	0	1
1	1	1	0	1	2
1	1	0	0	1	3
0	1	0	1	1	4
1	0	0	1	1	5
1	0	1	1	1	6
1	1	0	0	0	7
1	1	1	1	1	8
1	1	0	1	1	9

When all of these tests are completed, shut down power and plug in the clock. When power is first applied, the clock will indicate all 8s. Try the message generator in RTTY mode and see that the 8s print properly. When they do, go ahead and set the correct time and date in the clock. Pressing the RTTY start switch should give you that desired message we all wanted when we started the project. Out will come the time and date, providing the programming of the chip was correct.

This circuit has been operating for about 8 months now without a circuit failure. It has really been handy to use with the relay and WRU system at W1HAB. With an external programmer the unit becomes a very versatile unit to send up to 8 different messages at the touch of a button.

Special thanks are due to WA1DQL, who provided the motivation to do the design, to K1ZPX, who checked out the prototype, and also to K2USG, for the photographic work. ■

Reference

"A TTL Message Generator for RTTY and CW," Bell, James E., and Schmidt, Fred H., *QST*, November, 1973, p. 23.

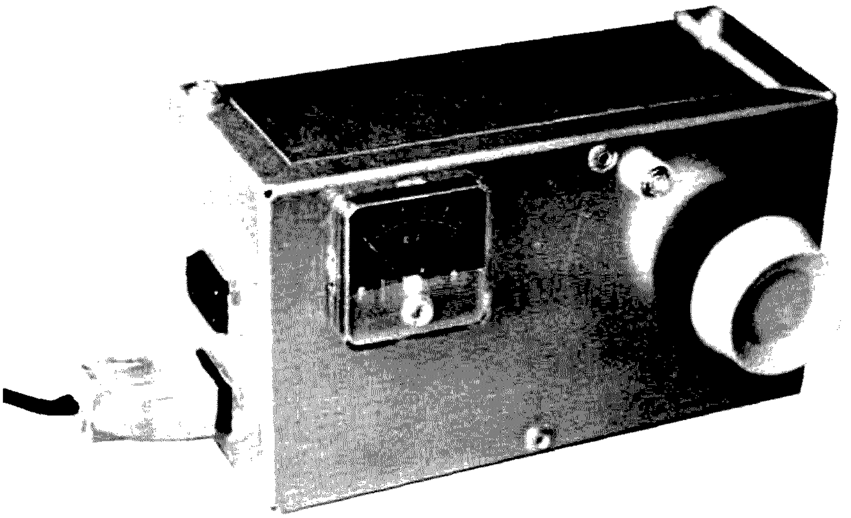

by
Peter A. Lovelock K6JM
1330 California Ave. #307
Santa Monica CA 90403

The Solder Master

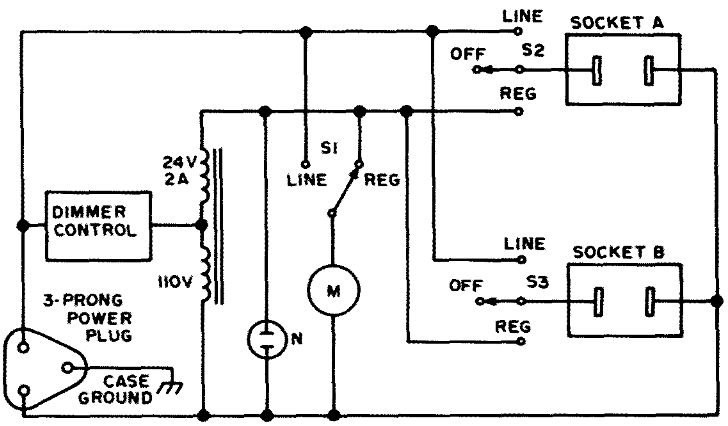

For contemporary assembly projects I use popular, screw-in element and tip soldering irons which, with tweezers and magnifying lenses, are tools of the micro-component age. Frequently I use two irons at the same time – a 50 Watt heavy duty for large joints and a tiny tiplet for compacted PC boards. Frustration is maintaining both irons at proper temperature. The big element, left idle for any time, toasts its solder tinning and threatens self-destruction, requiring unplugging. The tiplet dissipates heat too fast for more than one connection, involving impatient recovery time.

At the aerospace plant where I do my thing, our young ladies at each assembly

station have neat, solid state soldering iron control units with voltmeters for adjusting desired element temperature. Just what I needed. I checked the price of these commercial units with our purchasing department. Following a brief respite in the first aid station, I regained my composure and applied some ham thinking for a better solution.

The el cheapo answer was the commonly available "light dimmer," rated at 600 Watts and solid state at that. Lucky I had one in the junk box that would tame the heavy duty iron. But while lowering the voltage, why not also boost it briefly to help the tiplet along? A 24 V, 2 Amp filament transformer solved this.

The photos show how the major items were squeezed into a 5" x 3" x 3" aluminum utility box with two outlet sockets, in the initial version. An available miniature meter (yes, the dial does say "RF") was pressed into service, modified with bridge rectifier and series resistor to read zero to 1.0, for reference. This worked great, but had some inadequacies such as how to control the irons separately, which was soon taken care of with a few more parts.

The schematic gives the final story, which included adding three small toggle switches not apparent in the photos. I also splurged on a new meter of the same size, reading 0-150 V ac. The transformer primary and secondary windings were connected in series to make an auto-transformer, having checked proper polarity connection so that with 110 V ac across the primary, 130 V ac was measured across the combined windings. The "dimmer" control adjusts line voltage to the primary so that regulated output to the sockets can be varied from 0 to 130 V ac with the front panel knob. S2 and S3, miniature single pole, triple throw (center position OFF) toggle switches, were installed right below the meter, in line with their respective sockets. These allow either socket to be switched to regulated or line voltage, or "off," independently. S1 was rather gilding the lily in switching the meter to read regulated supply, or double as a line voltage monitor. This miniature SPST switch was located immediately to the left of the meter. Due to the pulsating waveform output from the dimmer control, voltmeter readings are not really accurate rms, but close enough for reference adjustment.

Now I keep the larger iron happy idling at 70 V, while using the small one switched to "line" – or switch it off temporarily, while boosting voltage to the tiplet to solder multiple joints. Start up time is reduced by briefly applying full 130 volts, but boost voltage (over 110 V) should be kept to the minimum to avoid premature element failure. And when the XYL sounds chow call, both irons can be left idling at approximately 60 V, for fast reheat upon return. The neon pilot light, being connected across the regulated voltage, extinguishes at about this control setting. If you set the control where the pilot is flickering, this is just right for keeping the irons warm.

Note I finally use a three wire power line input to provide ground to the metal case. This is not only a desirable safety feature, but also provides shielding for noise spikes emitted from the dimmer control. Should you use grounded tip irons, you will also want to substitute 3-prong outlet sockets rather than the 2-prong types.

You may also find some other handy applications for this voltage controller around the shack – but don't exceed the transformer wattage rating by plugging in the coffee pot. I had most of the parts on hand. If all parts are bought new – and dimmer controls which retail for around $5.00 can be found on sale for as low as $2.98 – the total cost even in this age of inflation should not exceed $15.00.

One last warning. The push switch built into the dimmer control serves to turn the regulated supply on and off. But, while plugged in, the unit will furnish voltage to the sockets when either S2 or S3 is switched to line. Inadvertently leaving the irons on is avoided by leaving S2 and S3 at center position OFF when not in use.

Anyway, shutting off the main bench safety switch, which controls all outlets, is double protection. You do have a main safety switch in your shack, don't you? ■

When the **XYL** sounds chow call, both irons can be left idling . . .

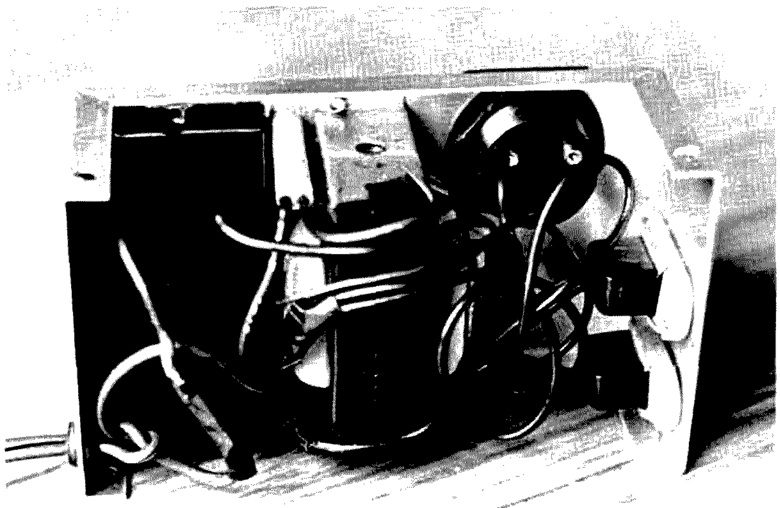

Internal view.

Stack Your ICs

by
Maj. Robt. M. Harkey (Ret.) W4CUG
1204 Dooley Drive
Charlotte NC 28212

As unlikely as it may seem, one disadvantage that the experimenter has when using and designing with integrated circuits is coping with redundancy. As an example, when designing/constructing a series of redundant circuits from ICs such as frequency dividers for the timebase of a counter, the layout of the circuit board becomes a formidable task. As far as I'm concerned, anything that can be done to simplify board layout is well worthwhile – and therein is the purpose of this article.

A very basic block diagram consisting of a divider circuit for counting down a 10 MHz crystal oscillator to 1 Hz is shown in Fig. 1. Since in this case there is no requirement for reset of the dividers, the circuit boils down to only four connections: plus 5 volts, ground, input and output. Now if you'll look at a typical counter circuit board, you'll realize the complex circuit board that it takes to achieve the desired four connections. So the question is: How do we integrate the integrated circuits? I think I have one solution.

Using the most common decade divider, the 7490, the solution is relatively simple: You just stack the ICs one on top of the other, make the necessary IC to IC connections, and pot the entire stack of ICs with a

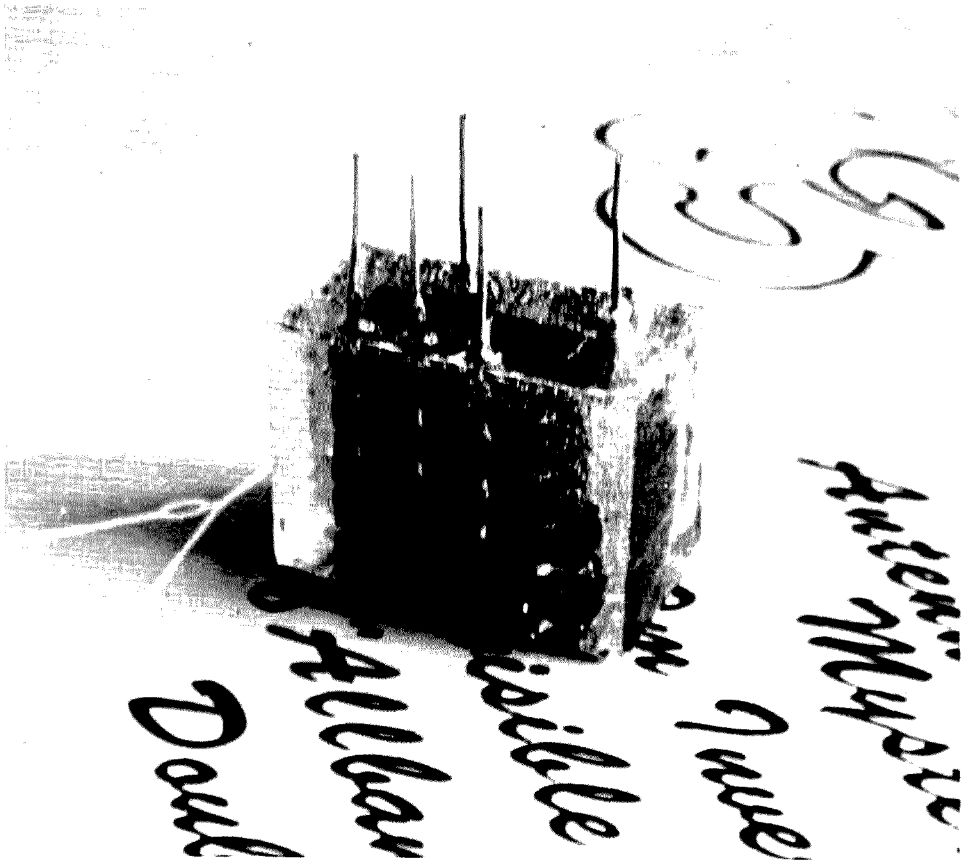

And Pot 'Em

few external leads sticking out. Sounds good, doesn't it? But the "doubting Thomases" among you probably think there are a few catches – and there are. First and probably the greatest danger is the possibility of one of the 7490s becoming defective and thus ruining the usefulness of the entire stack. Based upon my experience, this is highly unlikely if care is taken with the supply voltages. The 5 volt supply should be well regulated and in no case should the supply voltage be reversed to the IC stack. Although I have gotten away with this a few times with individual ICs, the usual result is destruction of the IC. Another consideration is heat dissipation. The 7490s run relatively cool in normal operation, and so far I've experienced no difficulty with stacking and potting seven of them. The potting material obviously helps with the heat dissipation, but to be absolutely sure, you could include a heat sink or fins when potting the stack. The last consideration for the stacking process is how to make the many interconnections to seven 7490s stacked in a group which is no more than 1¼ inches high. Very simple task with the 7490. Referring to the 7490 pin connections in Table 1, you will note that pins 2, 4, 6, 8, 9 and 13 require no interconnections. Also, the following pins can be directly interconnected between all ICs and constitute a ground connection for the entire stack: pins 3, 7 and 10. Thus the only indirect IC to IC connection that must be made is between pins 1 and 12 to connect the inputs and outputs together. In addition, pins 11 and 14 must be connected on each IC to tie the divide by 2 and divide by 5 sections together. (This method provides a symmetrical output from each IC.) So, if you're still with me, let's stack two 7490s step by step; stacking any number can then be accomplished by repeatedly following these steps.

On each IC to be stacked, bend pins 2, 4, 6, 8, 9 and 13 straight out and cut them off flush. This action deletes unneeded pins and permits more room for other connections. Bend pins 11 and 14 in and flush up against the bottom of the IC body. Using a small piece of hookup wire, connect pins 11 and 14 together and carefully solder the connections. Now bend pins 1 and 12 straight out and cut off the tip ends of the pins. At this point, you should have 2 pins bent under the IC and connected (11 and 14), 2 pins bent out from the IC (1 and 12), 6 pins cut off (2, 4, 6, 8, 9 and 13), and 4 pins remaining in their original position (3, 5, 7 and 10). Now stack IC2 on top of IC1. On IC2, pins 3, 5, 7 and 10 should slide down smoothly over these same pins on IC1. Solder (carefully) pin 3 on IC2 to pin 3 on IC1 and do the same for pins 5, 7 and 10. Assuming now that the bottom IC1 is to be the input divider, use a small piece of hookup wire to connect pin 12 on IC1 to pin 1 on IC2. Using the foregoing procedures, continue to stack IC3 on top of IC2, IC4 on top of IC3, etc., until you have the desired number of dividers connected together. After you've finished the last IC, connect pins 3, 7 and 10 together with hookup wire. This connection is the ground point for the entire stack. Recheck the stack for shorted pins, solder bridges, poor solder connections, etc. Extend pin connections out the side or

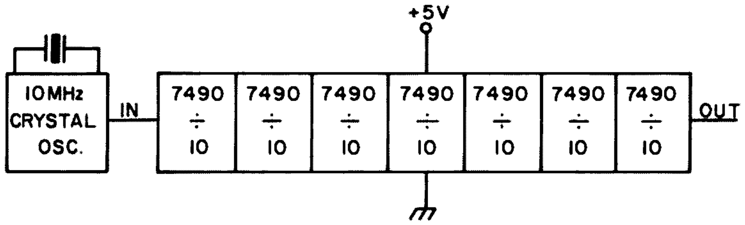

Fig. 1. Typical gate generation circuit divider for a frequency counter. With no reset requirements, only four connections are required to the decade divider circuit – in, out, +5 volt and ground. Note: For a 1 Hz count gate one additional divide by 2 stage is required.

Pin 1 – Divide by 5 input	8 – BCD output "C"
2 – "0" reset	9 – BCD output "B"
3 – "0" reset	10 – Ground
4 – No connection	11 – Divide by 5 output (BCD "D")
5 – +5 volt	12 – Divide by 2 output (BCD "A")
6 – "9" reset	13 – No connection
7 – "9" reset	14 – Divide by 2 input

Table 1. Pin connections for a 7490 decade divider. Note that the "0" and "9" reset functions have duplicate pins and only one pin is required to achieve a reset. Also, for countdown circuits, the BCD "C" and "B" pins are not required.

bottom of the stack using small pieces of solid hookup wire. As many connections can be made as you want, up to 16 (for a standard 16 pin DIP socket). In my case, I brought out the input (pin 1 of IC1), plus 5 volt line (pin 5 of all ICs), ground (pins 3, 7 and 10 of all ICs) and the outputs (pin 12 of IC5 and pin 12 of IC4). Two outputs were brought out in case I wanted to change the clock frequency. After you've made the pin connections, form them to fit into an IC socket, cut them off about one inch below the stack and plug them into a socket to hold their shape during the potting procedure. Now, and most important, make a sketch of the base diagram of your stack! Connect the stack to a square wave oscillator and check operation of the entire chain. After satisfactory checkout, place the stack upside down in some convenient, small container which has been lined with plastic sheet, tape or similar material. Level the container and pour it full of a potting material. I used a two part epoxy for this purpose and found that it works well. After the potting material has set up thoroughly, remove the outer container with a knife and clean up the exterior of your potted IC stack. The pins can then be trimmed to a convenient length and you're ready to plug in your integrated integrated circuit into a much simplified circuit board. My stack is 1" x 1" x 1¼" and occupies a very small space on the circuit board.

This sounds like a rather lengthy process, but after stacking one set of ICs, it becomes very easy and quick. I'm sure the IC manufacturers have comparable circuitry in one IC now but the price is probably high. With the price of 7490s now in the 75¢ area on the surplus market, this is a very inexpensive method of making circuit boards smaller and simpler. ■

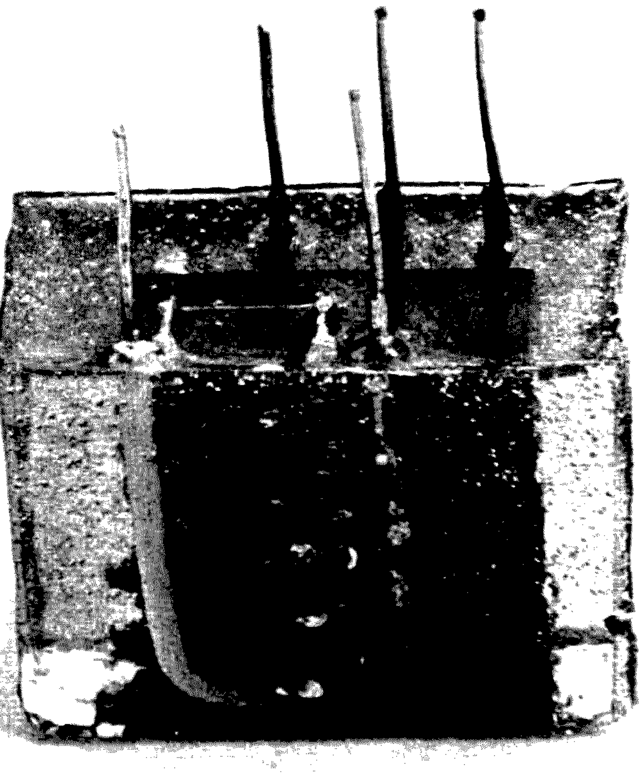

This is the completed potting job. The potting material is clear and internal connections between the ICs can be seen. The pins are ready for trimming to final size prior to insertion into an IC socket or printed circuit board.

Build This $5 Timer

by
P. C. Walton VE3FEZ
421 Lodor Street
Ancaster, Ontario, Canada

Do you have a TV in your bedroom? Have you ever fallen asleep and left it on? Or even worse just find yourself falling asleep and remember that you have to get up and turn it off? This versatile timer will turn the TV off from periods of three minutes after you have gone to sleep to periods up to about one hour. You can build this timer in one evening for a total cost of about $5 even if you have to buy all new components. The circuit I used, shown in Fig. 1, takes advantage of a new integrated circuit from the Signetics Company called the NE555. The NE555 is a very stable monolithic timing circuit in the form of an 8-pin dual in line package. It is currently selling for $1 from most suppliers.

The NE555 is capable of time delays from a few microseconds up to several hours. These delay periods are dependent on an external RC network consisting of one resistor and capacitor.

Very basically the IC is made up of a voltage comparator circuit, one leg of which is connected to a reference voltage which in our case is the power supply output voltage. The other leg of the voltage comparator is connected to the external RC network. When the capacitor has charged to a voltage equal to the reference voltage the comparator will toggle a flip flop connected to its output. The ON level of this flip flop is used to turn on a driver circuit which picks up our time delay relay. This is a very basic description of a fairly complex IC. If you require a better explanation of the internal workings you can obtain one by writing to the Signetics people and requesting a data sheet.

The relay I used was an IRC MR312C with a coil resistance of 212Ω. Almost any 12V relay will do the job as long as it does not draw more than 200mA from the output of the NE555 which is rated at 200mA. The RC network is a 100μF capacitor in series with a 5MHz linear pot and a 1MHz resistor. These values with the power supply that I used gave time delays of 3 minutes at the low resistance end of the pot and 58 minutes at the high resistance end.

You may have to experiment a little bit to get the exact time delay range that you require. This is due to possible differences in power supply voltage and components. You could even switch in different values of R and C with a rotary switch to give you several different time delay ranges. The power supply is just an old 6V filament transformer that was in the junk box and a full wave rectifier and filter capacitor. Parts layout is not at all critical and the whole unit can be kept very small. I built mine on a scrap piece of perfboard about 5.08W x 7.62cmL (2"W x 3"L). The completed circuit board is mounted in a standard minibox using a three wire power cord for safety. On the front of the box is just a standard 110V three wire receptacle, the pot for setting the time delay period and the pushbutton to start the timer. The time delay pot was calibrated using an ordinary clock and a lot of patience. ■

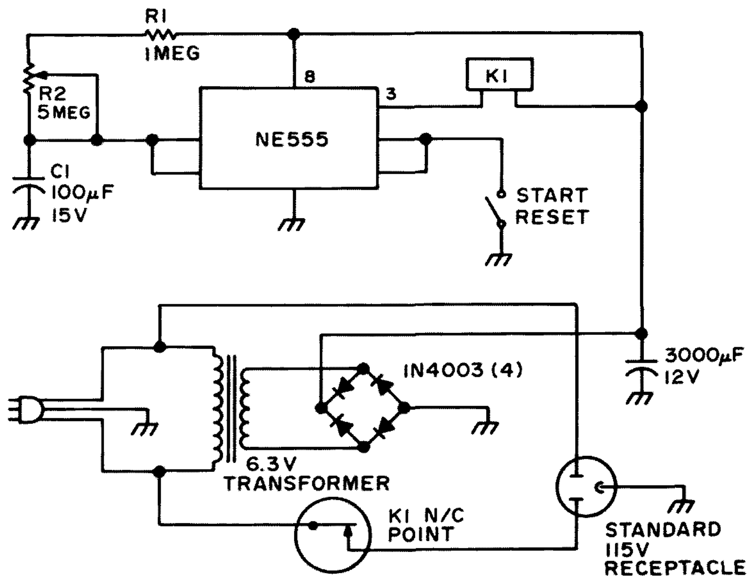

Fig. 1.

A $50 Self-Powered Counter

by
Jim Huffman WA7SCB
PO Box 357
Provo UT 84601

To you this may look like another construction article. "A pretty neat little counter," you'll say. "Think I'll build one." Little will you know how long it took me, and how much sweat is in one factor – cost. I love to get the cost on a project as low as possible through judicious shopping. It is my dream to offer all kinds of low-priced amateur gear . . . again! Some guys, like VHF Engineering, seem to be out to help the amateur by keeping the "amateur" in amateur radio. Others, however, look to me like they are out to soak the ham, right along with the CBer, consumer and anyone else who wants one of what they've got. I have written a bunch of articles for *73*, and all of them are on good inexpensive items that I think can put the "fun" back in amateurism. This article is one of my greatest achievements – the pinnacle of savings! I take great pride in accomplishing what I have done here. A 6-digit (that reads out to a full 8-digit capacity) counter, portable, hand-held, sensitive, rugged, LED readouts, requires no test equipment to build, and more, all for just a little over $50!

Costs are sliced down to an absolute minimum by cutting all the frills. For instance, many counters advertise no-flicker, or non-blinking readout. I am proud to announce that this one blinks, but you can only see it on the lowest reading scale, when you are reading signals to 1 Hz. The rest of the time the digits blink for 1 ms, and when was the last time you could see a 1 ms blink? Most hams will use the MHz and kHz scales most of the time anyway so the "blink" will be for 10 us and 1 ms respectively. And, when you are showing the XYL or neighbor your latest creation, show 'em on the Hz range so they will be impressed by the blinking, counting readouts!

While cutting out the non-blinking feature does save some money, the greatest saver is cutting out 3 of the 6 digits! I know, you are wondering how it is that we get a 6-digit counter with 3 of the digits missing. At current prices, dropping 3 unnecessary digits saves nearly $25. Even at TWS a 3 DCU costs $18. So if you can liberate an extra $18 for this project, you can have all 6 digits! But it is all the more fun to drop 3 digits, build the unit in half the width, and shift the readouts around to get a look at 8 digits of the incoming signal. Even in a 6-digit counter you have to shift the range switch around to get readout of say a 14.85 MHz signal to the nearest 1 Hz! With the Handi-Counter you have just one more shift to get the same capability with only 3 digits!

The basic "brains" for the counter come

from a kit available from TWS Labs. So order a digital dial kit from TWS Labs, PO Box 357, Provo UT 84601 for $45.95. When you order the digital dial, you get the same stuff you would get if you order the individual kit (a 3 DCU and a timebase), but you get a free ac power supply in addition. In fact, you can power your unit from this supply if you don't want to add nicads like in this version of the Handi-Counter. Or you can keep the power supply and have a good source of fairly well regulated 5 V dc for your workbench. The fact that the basic counter comes in kit form makes this project all the easier. All you need to do is make some very simple modifications to the kit, add the digit switching circuit and a couple of extra circuits on perfboard, and walla! Instant 3 x 6 digit counter!

Operation

Let's look at how you use the unit before you build it. Actually, the principle of operation is so simple that it is a wonder someone didn't think of it before (maybe someone did . . . better check my back issues of *QST*). You can see from the photo that there are several front panel controls. First is the on/off switch, simple enough function there. Second is the MHz/kHz selector (both these switches come with the kit); this one selects timebases, and does some decimal point selection. We could have labeled it Hz/kHz like its 6-digit brothers; it would only have required putting the decimal points in some other places that were not convenient (and cheap) with this kit.

The third switch, the one in the middle of the panel, we can call the "display selector" switch. This one comes from your corner Radio Shack and is p/n 275-405, a 4 PDT switch that currently is priced at 69¢. Other than the box and batteries, this is the only expenditure that is not available in a kit. You could have a complete counter that would only read to 100 Hz so far. You either add my famous circuits shown in the article, or buy another kit from TWS Labs for the 1 Hz capability.

Back to the 4 PDT switch. It is used to select which 3 digits of the 6 available digits are viewed at any one time. When you throw the switch to the left, you see the left most significant digits and to the right, you see the 3 right most significant. The decimal point jumps around every time to keep you thinking straight. Fig. 1 shows how it works. For an example, we used a forty meter signal that is actually 7,224,362 Hz. This is how the counter sees it: Note the placement of the decimal point; also note that in kHz left and MHz right, the readout is the same, but the decimal point is shifted. That is because, if you look at the original signal you can see

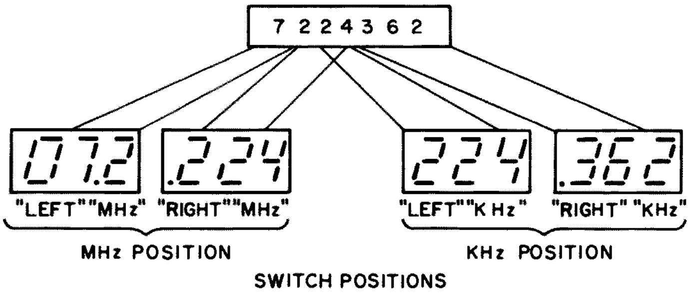

Fig. 1. Here is how the digital display in the Handi-Counter shows the eight complete digits in this forty meter signal. You simply move the digital display around and "look" at different portions of the signal at selected times.

that there are: 7.2 MHz, .224 MHz or 224 kHz (see, the readout means the same thing), and finally .362 kHz. That last 0.362 kHz is the same as 362 Hz, but would demand another timebase switch position, so we merely switch a decimal point and call it a fraction of a kHz.

Suppose you hook the sensitive input circuit of the counter to an oscillator you built the other day. You want a look at the output frequency of the oscillator. Maybe you see 21.8 on the MHz left setup; that means the oscillator is running at 21.8 MHz. If you were only interested in roughly knowing the MHz range of the oscillator, you would stop right there. If you wanted the kHz range you would leave the display left, and throw the timebase selector to kHz. That would give you a frequency check to the nearest kHz. Suppose you wanted further accuracy, or to know how much it

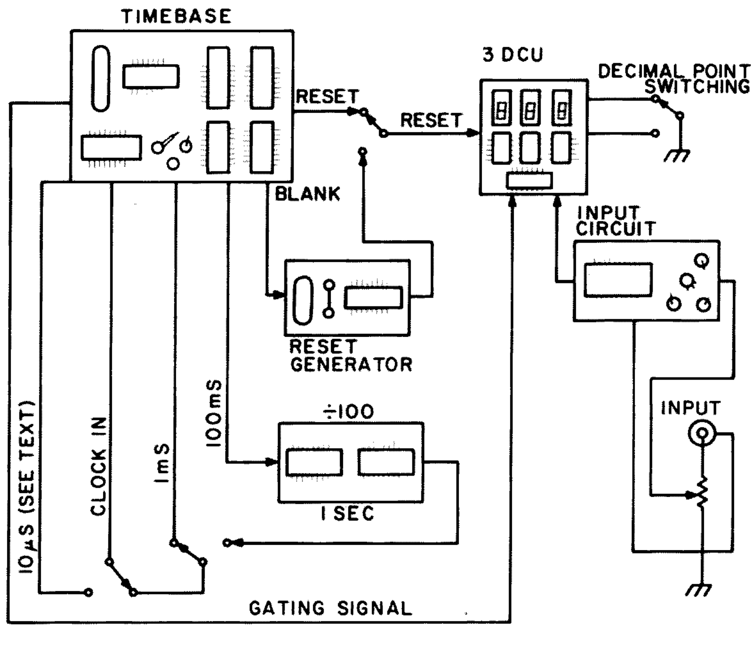

Fig. 2. This is the block diagram of the unit showing some of the switching that is accomplished with only two switches in the unit, a DPDT that comes with the timebase kit and an "added" 4 PDT.

Building the counter is really not hard – collect all the parts, do the layout of the front panel, and finally, mount the pieces in the box . . .

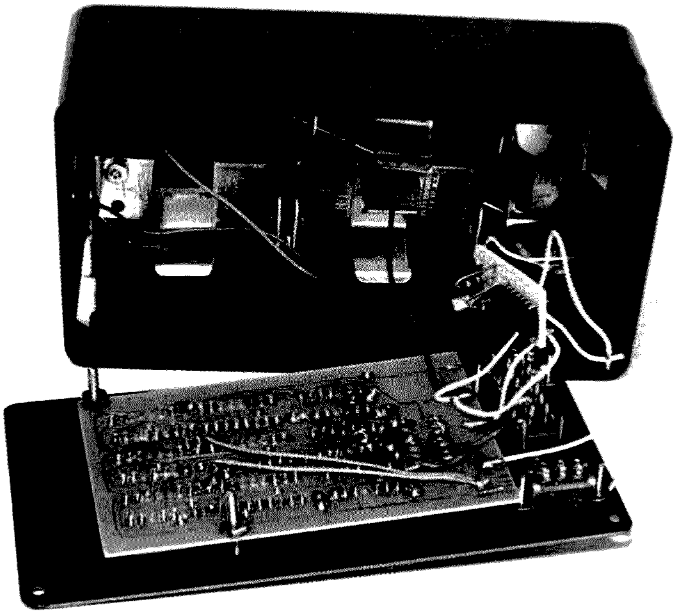

The first step in putting the thing in the box is mounting the front panel. Note the input circuit mounted on the switch. Later, the wires were extended so the input circuit could be mounted in the cavity formed by the irregular battery mounting.

drifts; then flip to the right digit display (still in kHz) and read out in Hz. You can see the flexibility of the whole thing! It's unreal! You have 3 digits in a lot smaller package, for a lot less cost and you are reading a 21 MHz signal out to eight places! Oh, the miracle of electronics . . .

Fig. 2 is the block diagram of the counter and this will help you understand what is going on in there. The easiest process takes place in the kHz position. Here, the timebase selector and display selector switches choose to provide a one second (right) or a 1 ms (left) signal. This is high-accuracy stuff with the timebase being divided by a million to get the one second clock; any errors or drift in the timebase oscillator (already crystal-controlled) are divided by the million too. At the very beginning of the count time (1 sec or 1 ms), the timebase gives a reset pulse that starts the counter stages at 000. Then the counter merely counts the input pulses that occur during the selected time period. On the kHz left position, for example, the counter is cleared and enabled for one second. When counting a 60 Hz line input, the counter would start to flash (the part that will impress the average observer) until the end of the counting cycle when it will sit there displaying .060 kHz, or 60 Hz.

When the display selector switch is pushed left, we apply a 1 ms gating signal to the counters and count the events that occur in 1 ms, or in other words, we count kHz. A 30 kHz signal will show up as 030. Note that there is no decimal point; there is no need, as the timebase selector is in the kHz position so it reads out as a whole number, not a decimal fraction. From the block diagram, when one switches to the MHz range, the clock now comes from 1 ms and 10 us. The 10 us clock is fed to the counter circuits in the "MHz left" position and merely allows the counter stages to count for 10 us. On this scale, the chance for error from the 1 MHz crystal is greater and the fact that the timebase is crystal-controlled becomes the greatest asset. At the 10 us

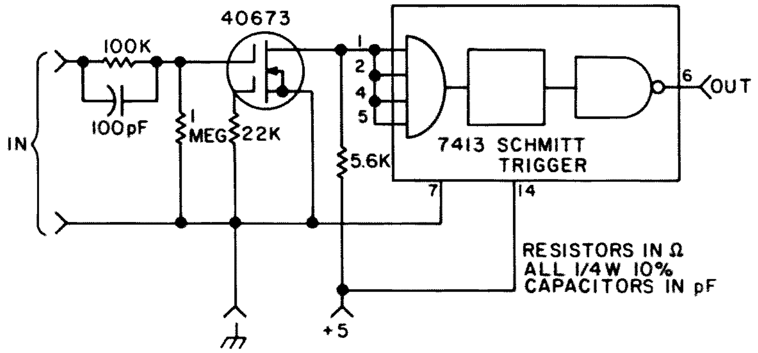

Fig. 3. Schematic diagram of the input circuit used with the Handi-Counter.

point the clock signal is only divided by ten. With 10 us gating the counter can count up to 99.9 MHz; in real life the limit is imposed by the fact that the counter circuits will only operate to 30-40 MHz without a prescaler. Since most prescalers divide the display by ten, you will display MHz on all three digits, so the decimal point can be left out.

It is probably a good idea to explain why there is a different reset circuit than the one with the kit. The reset circuit with the kit is designed to give high accuracy with fast input signals and operate at a 10 ms and 1 ms gating output. While the kit's reset is more accurate than the "extra one" built for the Handi-Counter, it causes some problems while running at slow speeds. The reset actually resets a couple of clock pulses *before* the gating signal enables the counter. That works great at 1 ms and 10 ms and means that you are not depending on the characteristics of the input impedance of a gate and some resistors and capacitors for your reset pulse; the pulse is clock controlled. The trouble comes when the clock is one second. The strobe circuit causes the counter to sample the input signal every second and a half or so and you can extend it to a few seconds by increasing the size of the timing capacitor in the unijunction oscillator circuit. Well, at one second clock speed, the counter resets to 000, waits a couple of clock pulses (seconds), then enables the counter stage and the stages count the input signal. After the one second counting period, it is time

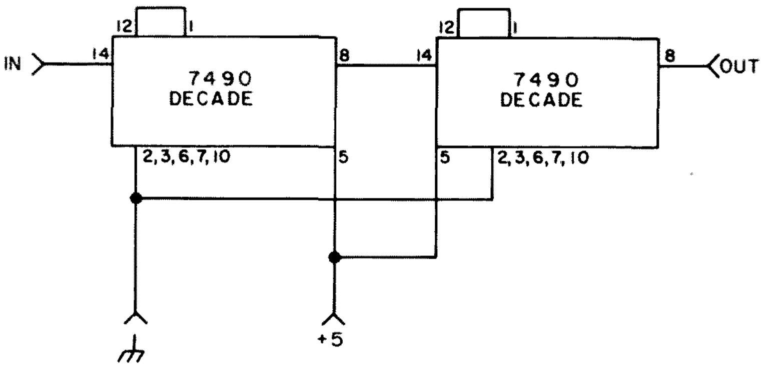

Fig. 4. Schematic diagram of the divide by 100, one second extender circuit. This circuit allows the counter to look at signals in the hundreds of cycles range and provides readout to 1 Hz.

for another sample and the display resets again. The result is you don't have the display lit long enough with the number to even read it. You may choose to merely extend the sample time by putting more capacitance in parallel with the timing capacitor (33 uF) in the unijunction circuit that comes with the kit, or you may use the reset circuit shown here.

The reset circuit built for the Handi-Counter works like this: When the enable signal goes active to allow the counter to count the input signal, a very fast RC differentiating network creates a narrow spike that resets the stages. You can see that since this spike occurs because of the enable signal, it actually resets the circuits when they are supposed to be counting. This is no real problem at slow speeds, but at higher

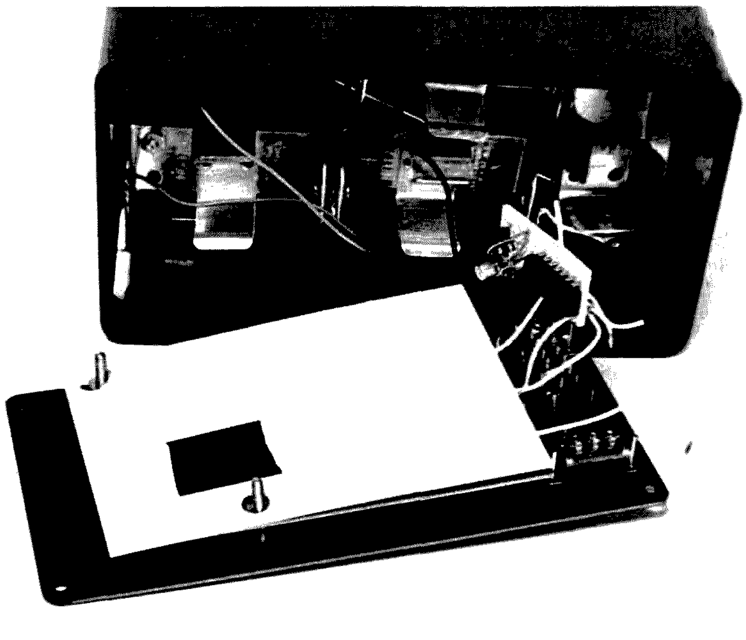

This photo shows the details of the piece of 3" x 5" file card, reinforced as mentioned in the text. This card insulates the timebase and the 3 DCU.

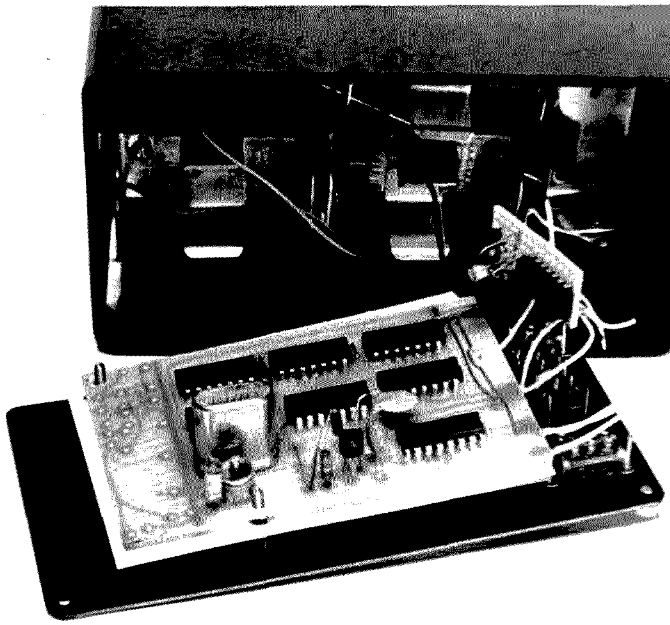

This shows how the timebase board is mounted. Note that there are no components at the top of the board. The top of the board is reserved for the power supply parts which are not used with the battery supply.

speeds, if the reset pulse is very wide, it can knock off a pulse or two and give an inaccurate reading. For the 10 us signal knocking a few pulses off can throw the MHz readout way off. In most counters that use this method, they merely adjust the clock signal so that the counters are enabled a little longer, but few of those counters use a gating signal of only 10 us, so that's why we have the two reset signals.

The counter input amplifier shown is pretty sensitive. Although I never measured the sensitivity, it works well just picking rf up with a little wire antenna. Its major problem is that you can blow the FET pretty easily. So be careful about input signals.

To calibrate the counter you can use a known accurate signal, or beat the oscillator against WWV. I prefer the first method because there are some pretty whacky beat notes because of the frequency division and some are only a hundred Hz away from the main signal.

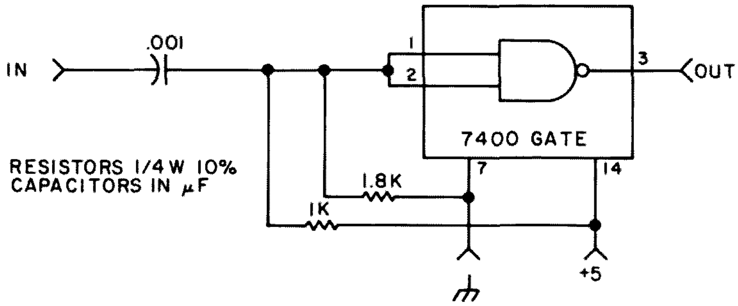

Fig. 5. Reset generator schematic. This added circuit provides a reset for the counter in the low speed (1 Hz) readout position.

Construction

Building the counter is really not hard. Obviously, the first step is to collect all the parts, then do the layout of the front panel of the case, and finally, mount the pieces in the box. You can use any box for your counter; I wanted the hand-held size and battery power so I obtained a 2¼" x 3" x 6" black box from a local supplier and tried almost in vain to paint on some kind of trim. If you can obtain one of these, get one with an aluminum front panel – it is easier to paint, cut and work, than the phenolic one that I bought. From all the photos, you can see how and where I put the switches. The key to switch mounting is to keep the switches out of the way of the 3 DCU and timebase circuit boards. These photos do not show the input jack and the sensitivity control; I mounted them on top of the case later. You will probably want a jack for charging your nicads without removing the cover from the box. If you decide to make your unit non-battery-powered, you will still have a lot of room in a box this size because all the power supply components mount on the top of the timebase PC board, and the transformer is small enough to sit on the bottom of the case.

Mounting Batteries

The bottom of my box wasn't flat; it had

some design raised in there, presumably to add strength. This was a problem in mounting the batteries and I ended up being able to get only one bolt through each holder and that only thumb tight. That only allows the batteries to stay in place, and offers very little strength against dropping, etc. You can see how the batteries are mounted from the photos. They are mounted to leave a "cavity" so the crystal, which sticks into the case pretty far, has room to keep from getting crushed. This cavity also makes a convenient place to put the three external circuit boards.

The battery mounting bolt leads stick out of the bottom of the case to mess up the effect of the little "feet" on the box. It is easy enough to glue flat grommets to the bottom, with the hole over the bolt heads for better feet than were on the box in the first place. Note: Later experiments showed that it is easier to buy a plastic 4-C cell holder and use it. The holder mounts in a smaller space than the individual cell holders and there is plenty of room for the crystal and external circuits. An added benefit is that the holder is cheaper than four of the individual units.

Building the Circuits

It is easy to build the kits; all the instructions are included. Trim leads very close to the PC boards. While the kit instructions do not stress this, we are going to mount the PC boards back-to-back under some pressure and we don't want any extra long or sharp leads sticking out of the boards. I recommend you even trim the leads on the crystal.They don't mention it in the kit, but it helps in sandwiching the boards closer together. Also take care in running the external wires on the board. They should be laid out so that they do not cross any pins or leads on the back of the board. Under pressure, these can puncture the insulation on the wires and cause a short. If you are using a different physical approach and have plenty of depth in your box, use the mounting method described with the kits and you eliminate many of the aforementioned problems.

Building the Input Circuit

The input circuit is built on a phenolic board, although you can make a tiny PC board for it if you want. Or, if space is at a premium, you can get the timebase extender board that comes in kit form from TWS; it is roughly 2" x 3" and has all three of the external circuits right on the one board. You can see the layout of the input circuit in the photos that show the inside of the box. In the photos it was mounted near the input

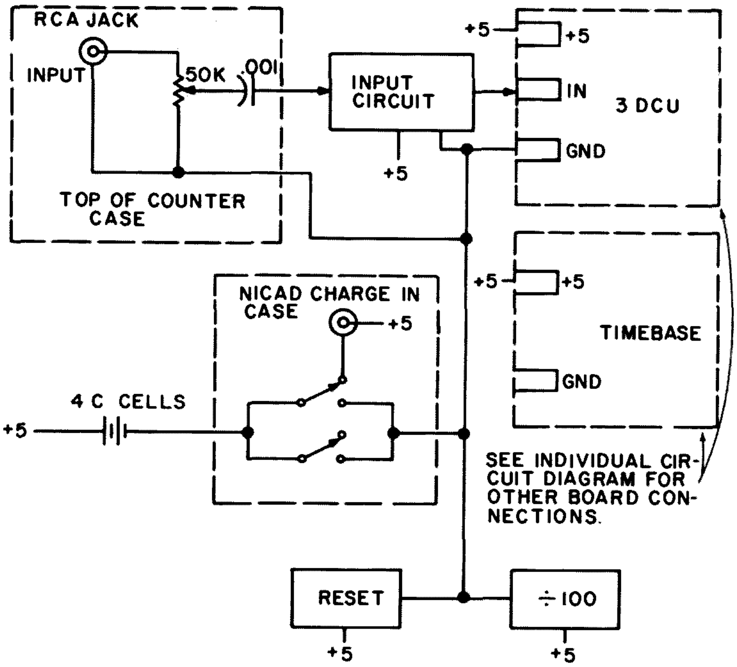

Fig. 6. Major power hookups and input circuit hookup. Note the nicad charging circuit. With a power supply (charger) plugged in, the nicads will charge when the unit is off. You may wish to allow them to charge at all times. If you use the power supply supplied with TWS's kit, you turn the unit on and off by cutting the ac from the ac cord to the transformer input.

selector switch, while in the final version, longer wires were added and it fit in the cavity formed by the batteries, and near the input level control and input jack. Make sure your wires are long enough to put it where you need it. There is enough hookup wire with the kit for most installations. After the circuit is built, put some tape on the bottom of the board so the circuit will not touch the battery holders or the other circuits that are stuffed along with it in the battery cavity. Fig. 3 is the schematic of the input circuit.

Divide by 100, Extender Circuit

The 10 ms clock from the kit drives this

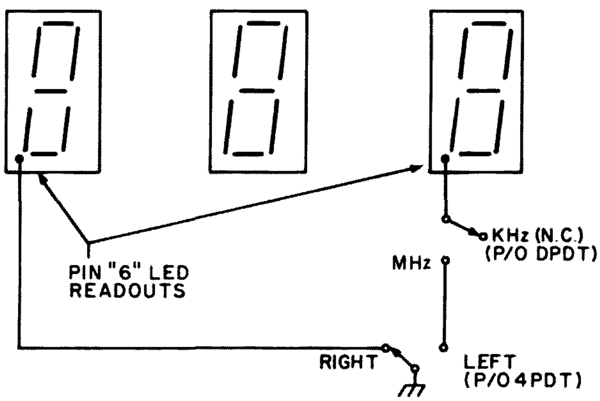

Fig. 7. Decimal point wiring diagram.

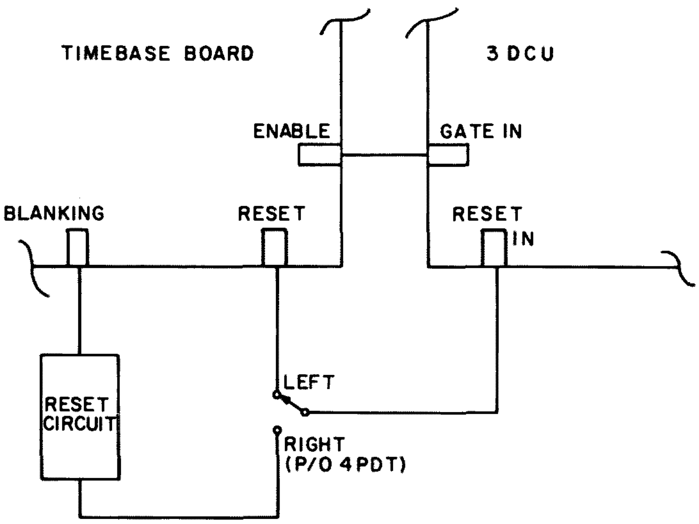

Fig. 8. Reset circuit hookup to the timebase and 3 DCU boards.

circuit shown in Fig. 4. The output of the divide by 100 circuit is one second clock used in the timebase generator to make the one second enable signal for the counter. The circuit is very simple, and consists only of two decade dividers in series. There is a photo of the perfboard layout for your reference.

Reset Generator

The reset generator is very simple; it consists of the RC network and a 7400 gate used as an inverter. Fig. 5 is the schematic of the circuit. The output of the gate is a normal logic 0. When the sample signal comes along (actually the inverse of the signal called the "blanking" signal with the kit), it causes a positive pulse output and resets the counter stages. Because of the nature of this reset, as mentioned before, it is best not to use it (use "kHz left") when looking at very fast signals. On slower signals, there will be no difference in reading between this and the "MHz right" readings.

Interconnecting the Circuits

Fig. 6 shows the major interconnections and the hookup of the input circuit. First mount the 3 DCU counting and display unit on the front panel as shown in the photo, then run the power and interconnections as given in Fig. 6. Run 1 inch wires from the terminals on the 3 DCU card; these will connect later to the switch and the timebase board.Run the decimal point wiring to the switches on the front panel as shown in Fig. 7.

Fig. 8 shows how to connect the reset circuit to the timebase and 3 DCU boards. Fig. 9 shows the hookup for the interconnecting wiring that does the timebase switching, including the divide by 100 circuit.

When the wiring is completed, put an insulating card (a piece of 3" x 5" file card works great) between the 3 DCU and the timebase card as shown in the photos. First mount the whole thing up and tighten down the mounting bolts. Then take the thing apart again and inspect the piece of card for punctures where a wire from the circuit board was too long or too sharp. Trim the faulty wires or pins, reinforce the card with a black electrical tape strip around the puncture (if any), add another layer of insulating card, and remount the boards.

Put in the batteries, drop the input circuit, divide by 100 and the reset circuit boards in the cavity. Oh, and don't forget to install the input jack and pot. Wire the power connections to the batteries, and let 'er rip! The displays should light.

Checkout

When power is applied, the readouts may show any number reading at all. This is

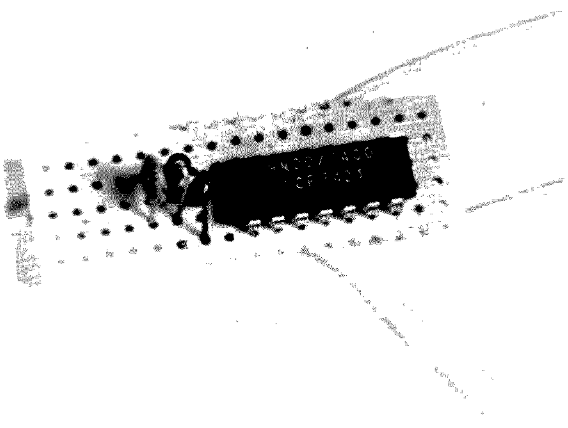

This is the perf board-mounted reset circuit.

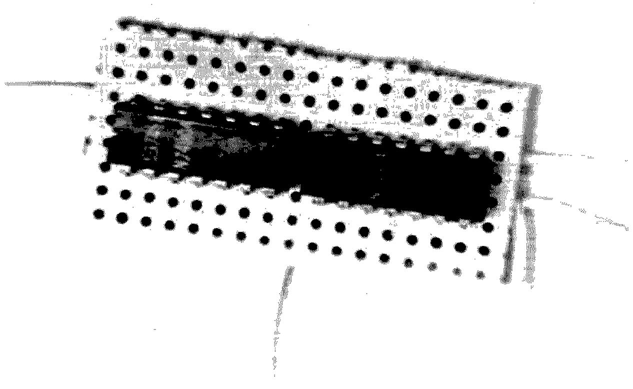

The divide by 100 circuit — it provides a one second clock for the Handi-Counter.

normal. After a second or two, and the oscillator is running and all the circuits "settle," the random numbers should clear. The display should flash "000." Now you are ready to use your counter and look for all manner of signal around the shack. Make sure the thing resets in all switch positions and you can tell if your new reset circuit is working okay.

Points to Remember

The unit will only run for a couple of hours from fully charged nicads, so don't leave it sitting around "power on" unless you are using it. The crystal oscillator is extremely stable and will work with little or no warm-up so don't worry about leaving the power on. Build a nicad charger[1,2] and keep the nicads fresh. Some will want a trickle charger that will always keep the unit "ready to go." You may want to build up the power supply external to the unit, let it trickle the nicads (there is 8 V unregulated in there), and use it for operating around the shack. You can also use cigarette lighter power by using a suitable dropping resistor. For that purpose, it is possible to use the regulator circuit and either positive or negative ground 12 volts. Instructions for mobiling come with the kit. Your resistor value will be different because of the extra current and IR drop caused by the added circuits.

This is one of the handiest pieces of test gear I have. And it cost very little, is very "state of the art" and requires no test equipment to build. I hope you enjoy building and using the Handi-Counter with its 3 x 6 digits and eight digit capability. ■

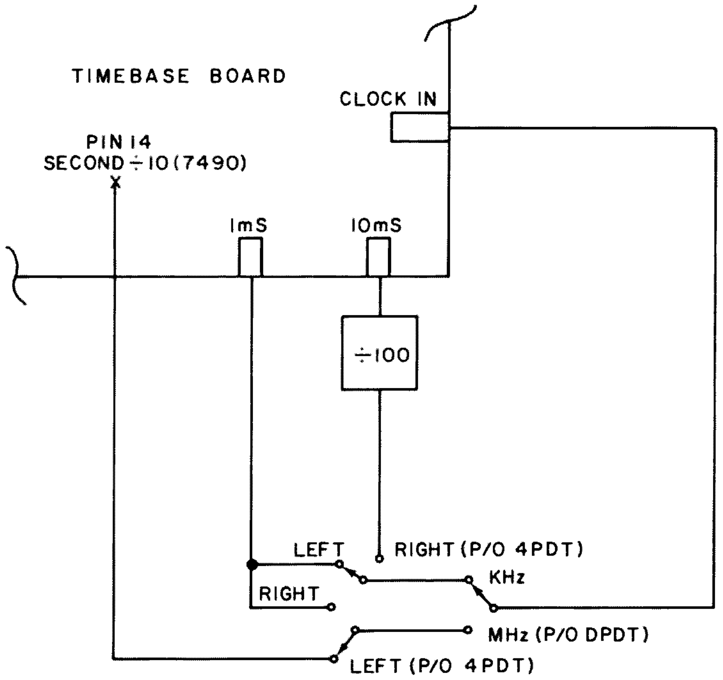

Fig. 9. Timebase switching diagram. Note that 1 ms is used on both MHz right and kHz left. The difference is the decimal point, and the source of reset pulse. (See other figures for details.)

References

[1] "Nicads, A Shocking Exposé," Bob Thornburg, *73*, Apr., 1975, p. 51.
[2] "How to Make Nicads Behave," Peter Stark, *73*, Dec., 1974, p. 24.

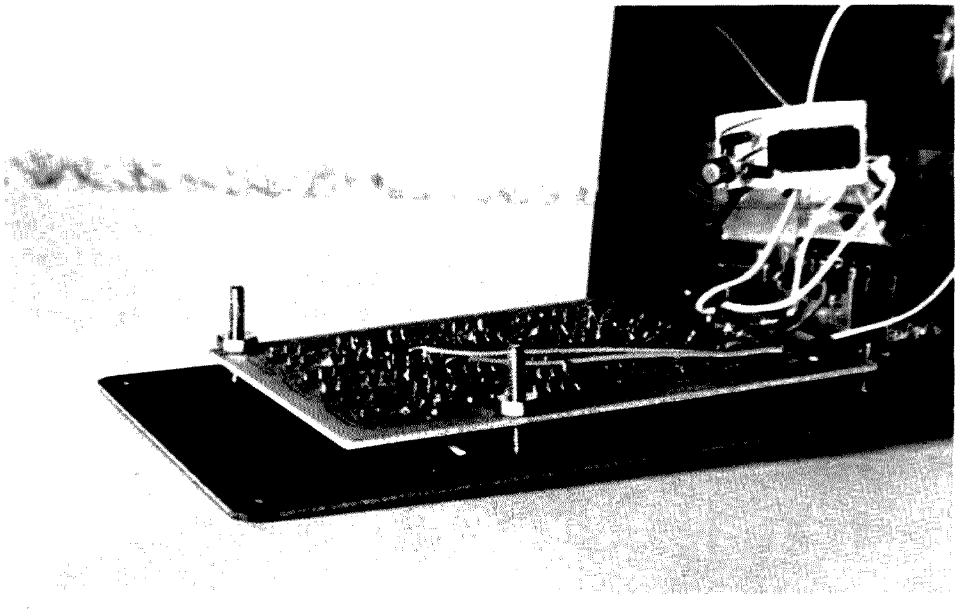

Here is how the board is mounted on the front panel. Just snug the nuts on the mounting bolts down enough to hold the 3 DCU board in place and let the front of the readouts and ICs hold the pressure against the front panel.

How to Become a Troubleshooting Wizard

by
Joseph J. Carr K4IPV
225 North Glebe Road
Arlington VA 22203

In times past just about every amateur acquired, if only out of sheer necessity, some degree of troubleshooting acumen. Of course, it might be argued that rigs of those bygone days were a lot less sophisticated than rigs of today. Is that single fact really good reason for the seeming decline in general amateur troubleshooting ability? I think not. It is contended here that anyone with a knowledge of theory deep enough to pass the General class license examination can make a reasonably good attempt at troubleshooting. Of course, years of experience are needed to make a commercial troubleshooter but we are only concerned with maintaining the usual ham's station equipment and not how many high technology transmitters or receivers he can fix per day or week.

Crux of the Problem

Lack of familiarity and zero technique are two reasons why, to many, troubleshooting is troublesome. Consider a case in point. I have a friend who bought a "near-new" condition Novice CW transmitter for a song ($5) because the now-General former owner found out (after the new license arrived) that it wouldn't work on 20 meters. He even knew what the main symptom showed – no grid drive to the final on 20 meters. All other bands worked fine. My buddy, mind you, was not an experienced troubleshooter at that time. He was merely a thoughtful teenaged amateur. He reasoned that a loss of drive on any single band in a standard simple MOPA transmitter had to be either an open coil (on that band) or some defect in the band switch. In this case the wire on the band switch that went to the 20 meter tap on the grid tank coil was not soldered properly! This little story points out one main thing that will allow successful troubleshooting: Think out the problem ahead of time with schematic in hand, to ascertain all possible causes.

Test Equipment Needed

After working in a lot of service shops, I have grown weary of the fellows who use the excuse that they could "fix it themselves if only they had the equipment." While a bench loaded with expensive laboratory grade test equipment is desirable, it is not strictly necessary for most troubleshooting. Sure, if you were in the business of providing electronic service for a profit, it would be a justified purchase because of the time savings on each job. The average amateur, though, only wants to get back on the air without having to wait weeks for a repair shop's turnaround time to elapse.

What constitutes "necessary" equipment? Consider, first, that the most valuable and

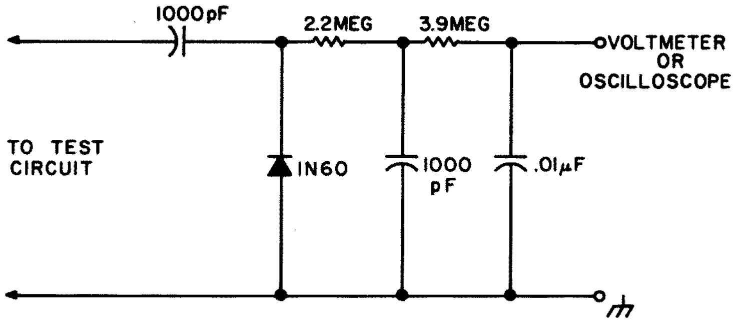

Fig. 1. Schematic of an rf demodulator probe for voltmeter or oscilloscope.

versatile piece of "test equipment" is already in your possession: your head! The mind can only function, however, when given a data input concerning the problem to be solved. For this we need our learned observations about the performance of the rig vis-à-vis the defect and some basic measurements, many of which can be taken with low cost or even simple home brew instruments.

Most basic in the troubleshooter's arsenal of instruments is some sort of multimeter. I prefer the traditional Volt-Ohm-Milliammeter (VOM) over the Vacuum Tube Voltmeter (VTVM) in those cases where money or other considerations dictate that only one instrument be purchased. It is wise to purchase an instrument with a sensitivity of at least 20,000 Ohms/volt (higher if possible). There are at least three reasons for this preference: portability, existence of a current range and insensitivity to rf fields. Many of the modern FET voltmeters fill the bill in the first two requirements (often better than the classic VOM) but most sadly fail in the third: They will read in error around rf fields such as exist in your transmitter.

The classic VOM will have ac and dc voltage scales, at least one current range (usually more) and at least one resistance

Years of experience are needed to make a commercial troubleshooter, but we are only concerned with maintaining the usual ham's station equipment . . .

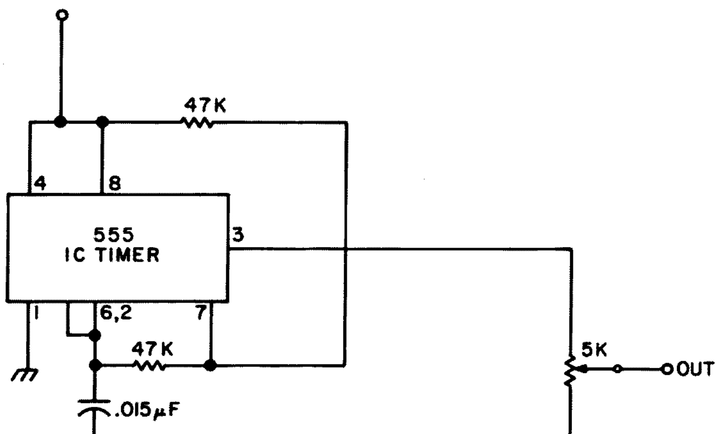

Fig. 2. 1000 Hertz square wave generator produces harmonics useful for signal tracing from audio to several MHz.

range. As is usual, the more you can pay for a VOM the more features and ranges you can expect. You can extend the dc voltage scale of most instruments well into the kilovolt range by the use of an external high voltage probe of the type which has a built-in divider network. It is also possible to get at least a relative rf level indication through the use of a demodulator probe such as that shown in Fig. 1. Most manufacturers offering such probes claim operation well into VHF.

The VOM is one of those "every ham should have . . ." instruments. Another in that category is the dip oscillator called "grid-", "base-", "gate-" or "tunnel-dipper" depending upon design. These instruments have an incredibly varied range of applications around a ham shack. They can be used to find the resonant points in tuned circuits, antennas and so forth. They can also be pressed into service as an absorption wavemeter, oscillating detector or impromptu signal generator. Best of all, they are simple to build and are low cost regardless of whether obtained in kit form or built from scratch.

One main thing that will allow successful troubleshooting: Think out the problem ahead of time with schematic in hand, to ascertain all possible causes . . .

In many troubleshooting procedures it might prove desirable to use a controlled, locally generated substitute signal. These are best supplied by a signal generator. Of course, a lab-grade instrument is the preferred type. It must be noted that many high grade signal generators are available on the used and/or surplus markets. While it might be "nice" to own a fine signal source, a more modest instrument will suffice for fixing the rig. It is necessary to keep in mind that "troubleshooting" and "alignment" are different procedures and that the signal generator requirements are vastly different. Commercial servicers have little trouble justifying a kilobuck signal generator for alignment purposes. They need the superior short term stability and a high quality attenuator; you don't. A "service grade" signal generator will be a very useful tool in ham troubleshooting. These are not up to the lab grade types in performance but they can be had for less than a month's rent on the big gens!

A crude form of signal generator useful for troubleshooting is shown in Fig. 2. This is a square wave generator operating at about 1000 Hz. Such circuits are widely used in the service industry because they can help pin point a dead stage in moments. These "instruments" generate the fundamental square wave and a boat load of harmonics that can be used out to several MHz. In most amateur work this means that we can "quick check" the audio, i-f and rf (on 160 to *maybe* 40 meters).

Your crystal calibrator may also suffice as a troubleshooting signal generator. In Fig. 3, we have a circuit that can be home brewed from low cost TTL digital ICs. Although the possible choices of output frequency are limited in this case you can obtain almost any frequency by correct choice of oscillator crystal and/or division ratio. If zeroed against a frequency standard such as WWV, this circuit can serve as an accurate method for frequency measurement. It can also be used as a regular signal generator or as a type of device shown in Fig. 2. In those latter applications it would be wise to provide an attenuator.

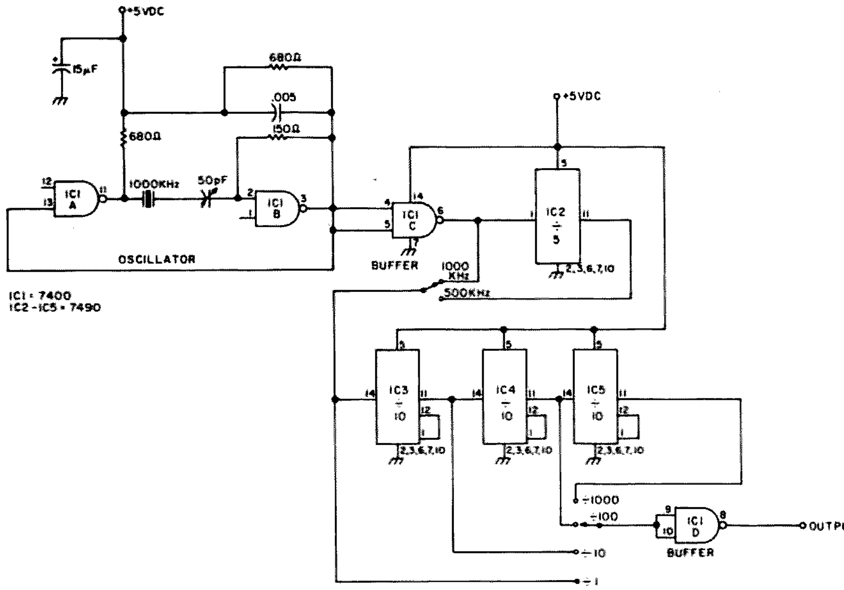

Fig. 3. Schematic of a TTL crystal calibrator.

If a smart troubleshooter were to be allowed only one instrument he would choose the oscilloscope. If triggered sweep and dual beam can be afforded, it would be very useful. Prices on 'scopes vary from $5/free to several kilobucks depending upon features, condition and vintage. I have seen many oscilloscopes, some quite nice, remain UNSOLD for lack of interest at hamfests and auctions!

Servicing typical ham transmitters requires several special instruments. Most of them are the sort which I feel ought to be in every ham shack. One item is the 50 Ohm dummy load. At a cost of only a few bucks you can have a dummy antenna which will absorb all the power you have a right to be dishing out to a real antenna. Only the utterly irresponsible would attempt to service a transmitter connected to a "live" antenna!

Rf wattmeters and relative field strength meters (Fig. 4) are also amongst the highly desirable. Although I prefer the wattmeter sort of instrument, make no mistake about it, the old fashioned swr bridge does have a lot of good mileage left.

No one seriously expects an amateur to be as well equipped with test instruments as a commercial or factory level shop. He should, however, attempt to obtain those considered "basic." For some of the others he might work through the local club to build a test gear collection of really nice pieces or arrange with certain locals to split the load by having each fellow buy certain instruments and then do a lot of "lendin'."

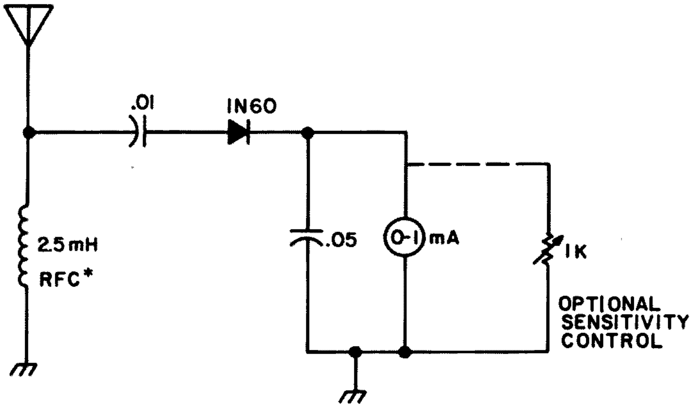

*Fig. 4. Schematic of a simple rf field strength meter. (*Can be replaced by an LC tank circuit for greater sensitivity or use as an absorption meter.)*

Troubleshooting Procedure

Troubleshooting involves a logical, step-by-step procedure for determining a fault in a piece of equipment. Best results in a minimum of time are obtained by using a method formed from a logical analysis of the problem at hand.

One thing which makes troubleshooting a darn sight easier is a service manual (or AT LEAST a schematic) on the equipment. It is the wise amateur who obtains (even at a ridiculous cost) the service manuals for all of his station equipment. In most instances new equipment comes with a manual; keep it. If you buy used or for any reason are without a manual, buy one and keep it on file. Do not expect your rig's manufacturer to be

The most valuable and versatile piece of "test equipment" is already in your possession: your head!

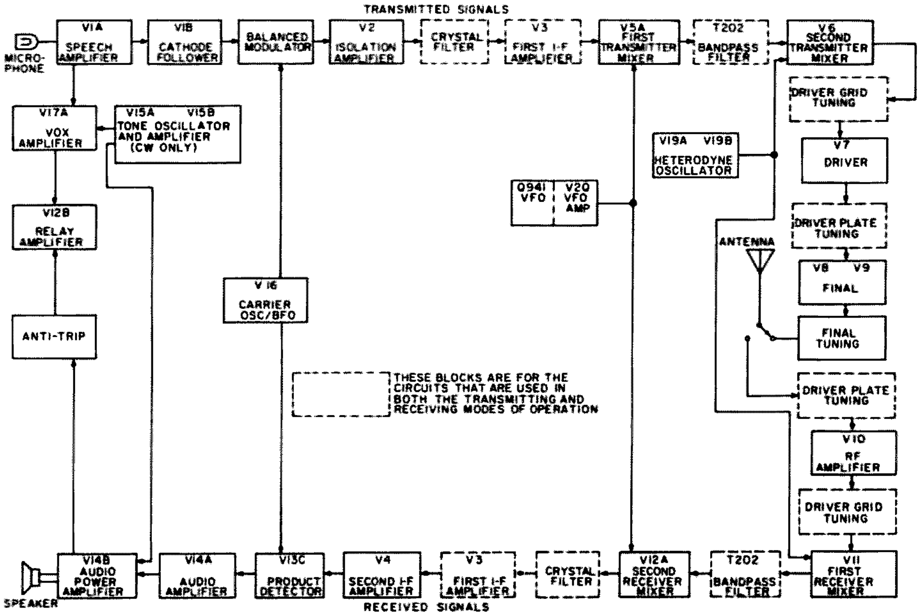

Fig. 5. Block diagram of a popular transceiver. (Courtesy of Heath)

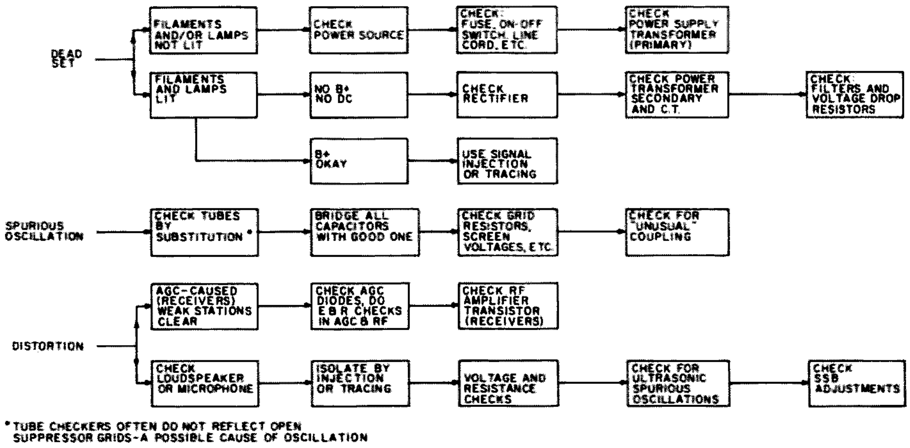

Fig. 6. Troubleshooting tree useful for finding a good jumping off point for troubleshooting specific defects.

The "screwdriver technician" is the bane of professional servicers everywhere . . .

able to supply manuals indefinitely; get yours now.

One significant aid in troubleshooting is the block diagram. It is especially useful in rigs such as transceivers where a single stage might have different functions. An example of a block diagram, this one from the popular HW-101, is shown as Fig. 5. You can often cut the work of troubleshooting in half by doing a "desk check" of the service manual and block diagram before reaching for instruments to do the "bench check." Note that many of the stages, shown here in dotted lines, are common to both transmit and receive functions. Although there are exceptions, you can usually overlook these stages when a defect affects only one function or the other.

The element of logic in troubleshooting should be almost an *a priori* truth (despite the philosophers who say that such cannot exist!). After all, if the set is dead (no lamps or tube filaments lit) is it wise to worry about, say, the beat frequency oscillator? Fig. 6 shows what is affectionately called a "troubleshooting tree." Although this is not offered as a universal approach you can often at least get onto the right track by its use; it is intended only to be a "point of departure guide."

Two terms pop up a dozen times in any servicing literature: signal tracing and signal injection. They are basically methods for locating a dead or otherwise defective stage. Before beginning one of these procedures, however, make certain preliminary observations. For example, can you hear noise in the speaker as you rotate the volume control? If so, the cause of the dead condition is probably PRIOR to the volume control. What about dirty contact noise as you rotate the selectivity switch? This usually means that the fault is prior to that point. Band switch noise (again, as you change bands) could mean a fault in the rf or a dead local oscillator. What about the level of "background" hiss (you know, as if you were tuned to a dead band)? High noise levels may tend to indicate troubles in the rf amplifier or antenna circuit. Here is one point where your calibrator is useful. Note how high the "S-meter" reads when the set is working normally. When a defect occurs, turn on the calibrator and see if it is lower. If not, suspect the antenna or feedline. These observations are of the sort that can save an awful lot of time. Most pros use them all day long even when unaware; it is the source of their supposed professional "intuition."

The process of signal tracing involves injecting a known and controlled signal at the input to a chain of stages, then looking for it at the outputs of successive stages with a demodulator equipment signal tracer (high gain audio amplifier with a fancy name!) or oscilloscope. When you find the defective stage, you can then use the VOM or VTVM to locate the bad part. In some cases, you might want to inject an appropriate signal at the antenna terminals while in others it might be better to inject another sort of signal at the input of the i-f strip.

Signal injection is a similar process. In this method you start at the output and inject an appropriate signal into the inputs of successive stages until you find one which no longer is capable of producing an output. In signal injection you begin at the output and work toward the input, while in signal tracing just the opposite situation obtains. In either event the procedure can usually be expected to ferret out the defective stage. Once found it is usually a simple matter to dig out the voltmeter and determine which component is at fault. Be sure not to overlook the obvious fault such as a bad tube or a loose connection. Once again, the

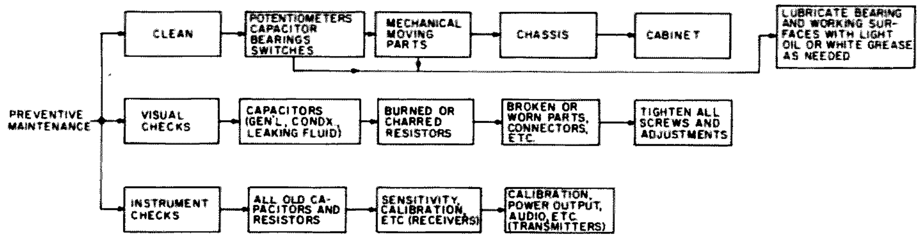

Fig. 7. Preventative maintenance tree.

observant are usually a bit more successful.

When troubleshooting transmitters, you can use a demodulator probe to find relative rf levels on the 'scope or VOM. It is usually better, though, to read the dc voltage developed by the grid leak bias often used in transmitter stages. This voltage will be proportional to the rf level delivered by the preceding stage. This system works so well that it is the basis for the Motorola "test set" popular with FMers who run surplus commercial Motorola mobile equipment.

Alignment

The most exasperating mark of the neophyte troubleshooter is a wild "diddle stick" (alignment tool). It is a pretty good rule to assume that alignment points NEVER shift enough to cause a gross fault in the receiver, especially a sudden fault. The only real exception is the local oscillator. Even in that "sometimes" case there are other methods (i.e., measure the frequency) for determining its condition. One telling thing that shows whether or not the stage is actually oscillating is to measure either the grid bias or the voltage drop across the emitter resistor as the set is tuned through the range (or in the case of crystal oscillators remove the rock). This will cause the bias to change suddenly for crystal pulling or smoothly in VFO type circuits. DO NOT EVER touch an internal alignment point without good reason, proper equipment and a knowledge of what it is that you are doing. You can diddle stick a decent set (that really only needed a small component) to death! This is why the "screwdriver technician" is the bane of professional servicers everywhere.

Preventative Maintenance

There are a number of little tasks which will keep your rig in top shape for a lot of years. These generally fall under the heading of "preventative maintenance" – see Fig. 7. One task would be to check all tubes on a periodic basis, say every six months or maybe once a year. Replace those which are defective or grossly weak. Some advocate doing a voltage check at critical points throughout the circuit especially in the power supply. It is recommended that you clean the inside of the rig, including all circuitry, with a paint brush and a mild solvent where needed. Use a switch/control (also called "tuner") cleaner spray on all band switches, function switches and controls. Clean capacitor and rotary switch bearings and relubricate using a white grease such as "Lubriplate." "Peaking up" alignment is NOT part of this procedure unless you can perform factory-level service. Even in that case it should not be obligatory except every few years. I know it sounds like harping, but alignment is simply not all that common a problem. In fact, after fifteen years of experience, I can only remember a couple of cases where alignment was genuinely needed (except where somebody played) and these were new and in-warranty sets! ■

A number of little tasks which will keep your rig in top shape for a lot of years fall under the heading of "preventative maintenance"...

Module Kits - A Low Cost Homebrewing Breakthrough

by
G. R. Allen W1HCI
80 Farmstead Lane
Windsor CT 06095
and
Bob Brown W2EDN
93 Gilmore Avenue
Binghamton NY 13901

With the high rate of inflation, it is more and more difficult for the average ham to afford a factory wired piece of gear for the VHF bands. For that reason, the authors have developed a modular approach to building a VHF transceiver for the 144 MHz or 220 MHz bands. By using a modular approach, the builder is not required to lay out a large chunk of cash just to get on the air. The builder may build a

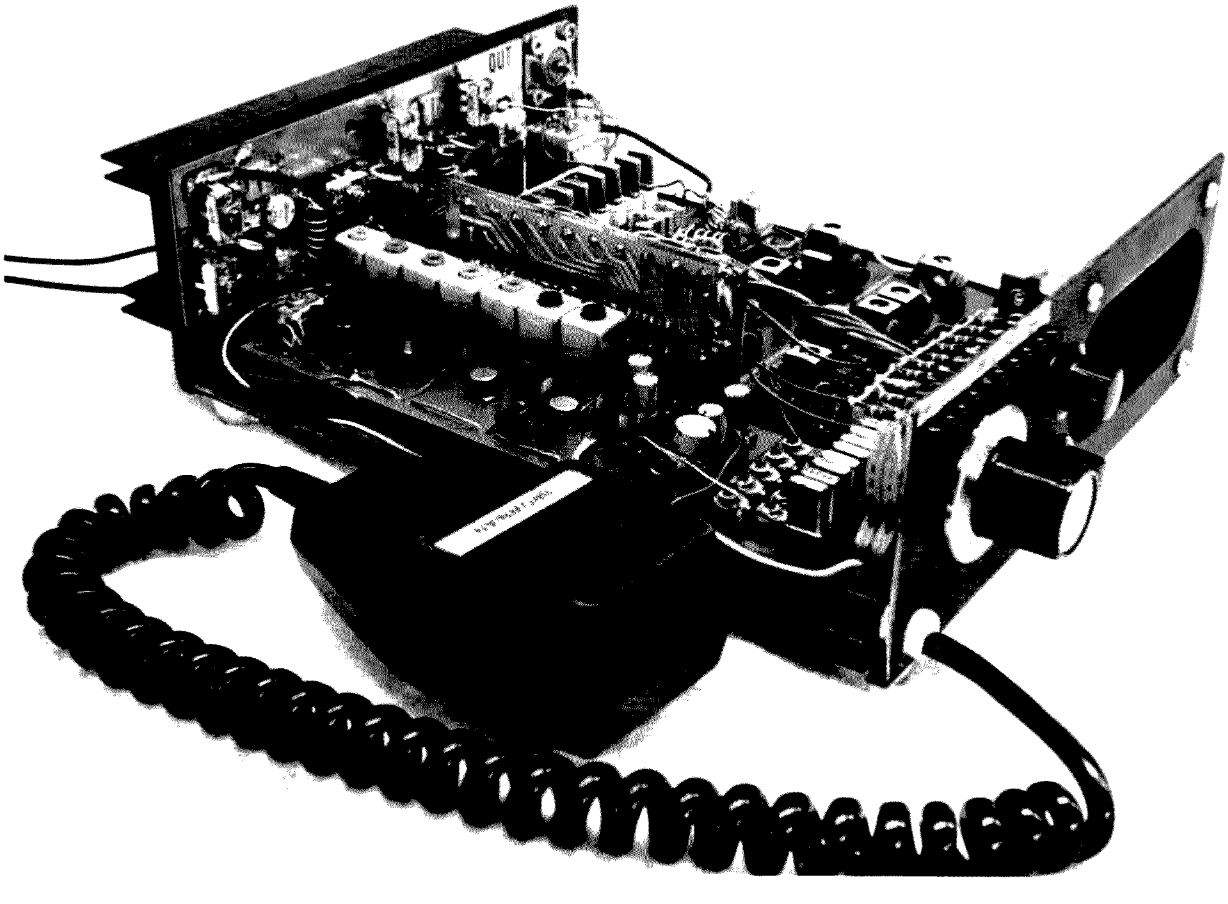

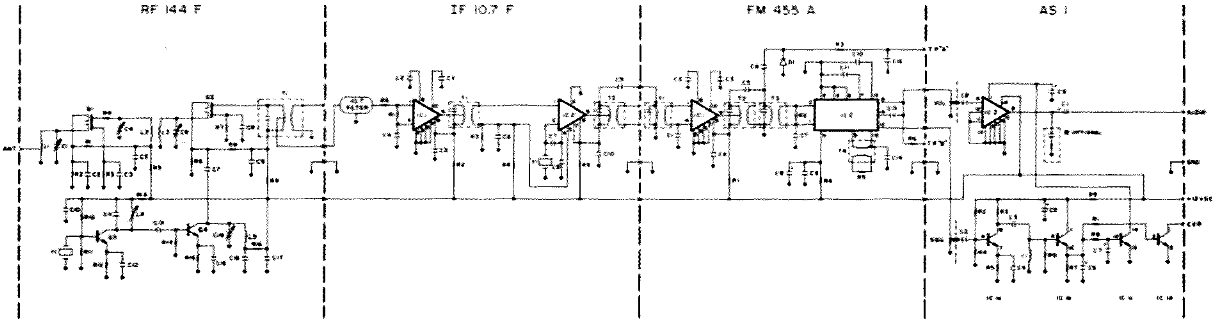

Fig. 1. RX 144 C schematic.

simple, basic transceiver and then add expansion modules and options as needs and finances dictate. Because of the fact that this modular approach requires the experimenter to build his own units, the experimenter will gain knowledge and knowhow and thus be able to maintain his own equipment should problems develop.

The transceiver described in this article may be built for either the 144 MHz or 220 MHz bands and will compare favorably to commercially wired units. The basic transceiver consists of a transmitter and a receiver operating as single channel units, and can be built for less than $100. Simple modules, such as multi-channel decks, channel scanner, and power amplifier, may be added to the basic transceiver to form a medium power, multi-channel, scanning transceiver for a cost well less than the commercially wired equivalent. The assembled transceiver may be operated on either 144 MHz or 220 MHz, depending on the kits purchased, and may be used in a breadboard fashion or mounted in a home brew or commercially available case. The builder may plan to construct the basic transceiver initially in order to get on the air for a minimum cost. At any time in the future the expansion modules may be added to multi-channel and/or provide higher power.

The units described in this article are designed primarily for 144 MHz and 220 MHz. The builder, however, will not be limited to these two bands in the near future. Currently, VHF Engineering has receiver modules available for 6 meters and is working on a 6 meter transmitter module. UHF 450 MHz transmitter and receiver modules have just become available.

It is impossible in a short article to give every construction detail required to exactly duplicate the transceiver described in the article. For that reason, basic schematics are provided for reference purposes only. Complete construction and debugging details are provided with the kits. Should the experimenter wish to build his transceiver from scratch, he may obtain boards and/or schematics and construction details from VHF Engineering for a nominal charge.

The Receiver

The VHF Engineering receiver kit used in this article is an RX 144/220 C. It may be used either on 144 MHz or 220 MHz merely by changing the coils on the front end rf board and by making a few minor component substitutions. The receiver draws 60 mA squelched and uses integrated circuitry exclusively except for the rf board. Sensitivity is .3 uV for 20 dB quieting for 140-170 MHz and .5 uV for 220-230 MHz. The receiver is dual conversion and is supplied with a 10.7 MHz 2 pole filter producing a 6 dB bandwidth of ± 10 kHz. The receiver will produce two Watts average audio output into a 4 to 16 Ohm speaker. The front end of the receiver uses a dual gate MOSFET for low susceptibility to intermodulation. The receiver kit is very easy to assemble, taking about 10 hours for the average builder. Alignment is done by using a signal generator, an rf probe, and a high impedance voltmeter (all borrowed, of course). Complete construction and alignment instructions are given with the kit.

Receiver Multi-Channel Option

The basic receiver is a single channel unit. It may be used as a single channel unit until such time as interest and finances lead to the desire for additional channels. When additional channels are required, the receiver can be multi-channeled simply by adding the VHF Engineering CD-1 multi-channel deck.

The CD-1 consists of a 10 channel deck complete with circuit board, sockets for the crystals, diodes, resistors and capacitors. Receiver channel switching is accomplished with a diode switching arrangement to permit manual switching of channels and automatic switching using the ten channel scanner. The completed 10 channel deck is plugged directly into the receiver as shown in Fig. 2. This receiver multi-channel kit is a

By using a modular approach, the builder is not required to lay out a large chunk of cash just to get on the air . . .

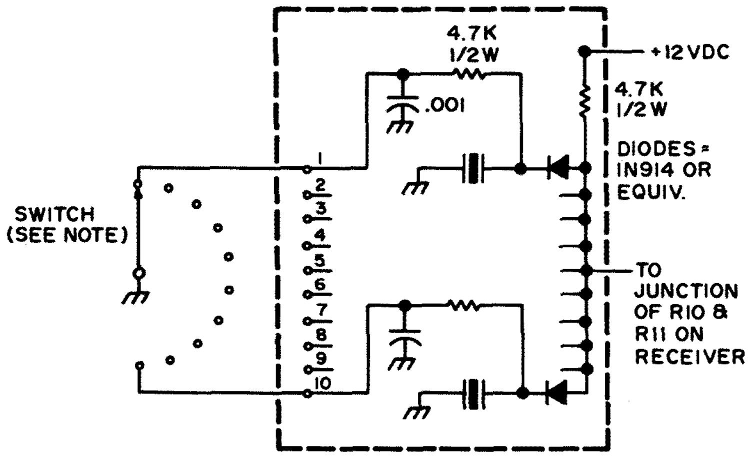

Fig. 2. Receiver multi-channel option. Note: Switch is part of transmitter multi-channel option.

versatile unit and may be used with most transceivers using crystals in the 45 MHz range.

Scanner Option

A channel scanner is a gadget extremely valuable to a true FM enthusiast, as it permits the operator to sequentially search selected channels for activity. All receiver channels are scanned automatically in sequence to see if a signal is present. If a signal is found, the scanner locks on the signal and remains on that channel as long as activity is present.

The circuit consists of a simple multi-vibrator operating into a decade counter and a decimal decoder. The output of the decimal decoder drives LED lights to indicate the channel being scanned. Switching diodes on the CD-1 multi-channel board are used to switch the crystals in and out of the circuit. A carrier operated relay connection is made to the receiver board to stop the multi-vibrator when activity is found on a channel. The circuit is easily defeated if manual override is desired. Either manual operation or automatic operation may be used.

The Transmitter

The transmitter is a true frequency modulated unit using crystals in the 12 MHz or 18 MHz range. It has an output of 1 Watt on 220 MHz and better than 1 Watt on 144 MHz. The only difference between the 220 MHz and the 144 MHz versions is the number of turns on the various coils. It is very simple to construct and may be tuned up by using a homemade rf probe and a small #12 bulb. Construction time is about 3½ hours.

Transmitter Multi-Channel Option

The basic transmitter is a single channel unit. While a single channel unit may be sufficient under some circumstances, the builder will very quickly require additional channels. The multi-channel option for use with the transmitter consists of a board, crystal sockets, and crystal trimmer capacitors needed to give the basic transmitter 10 channel transmit capability.

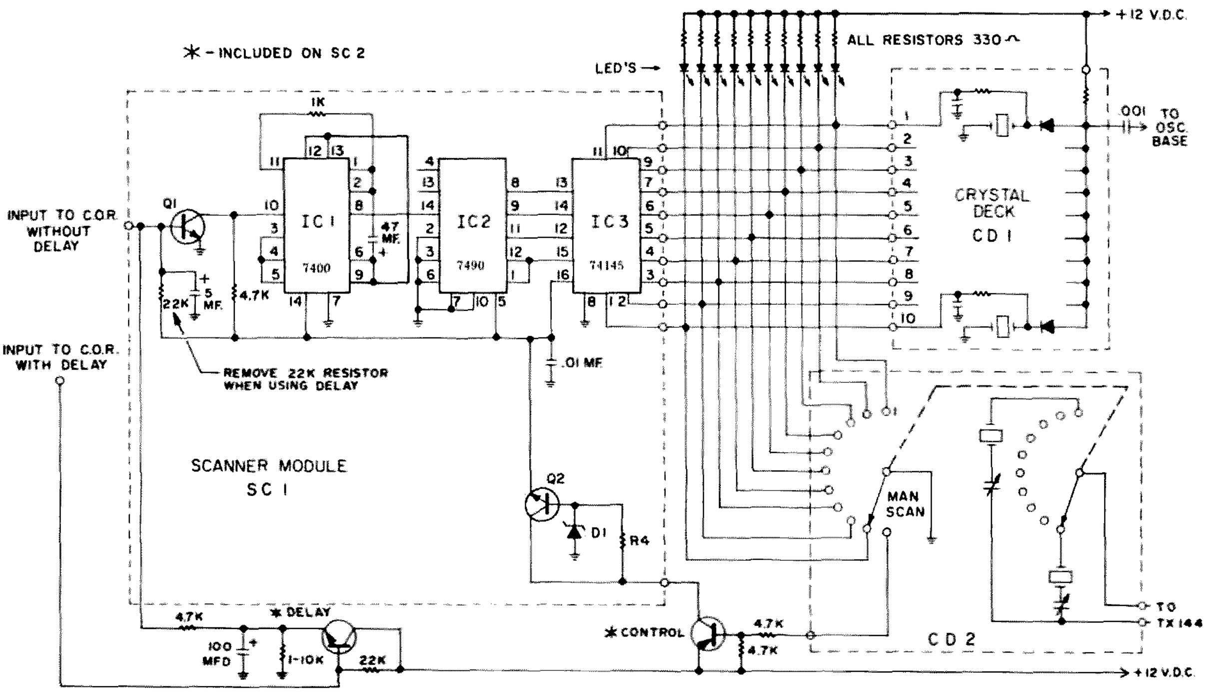

Fig. 3. Scanner option.

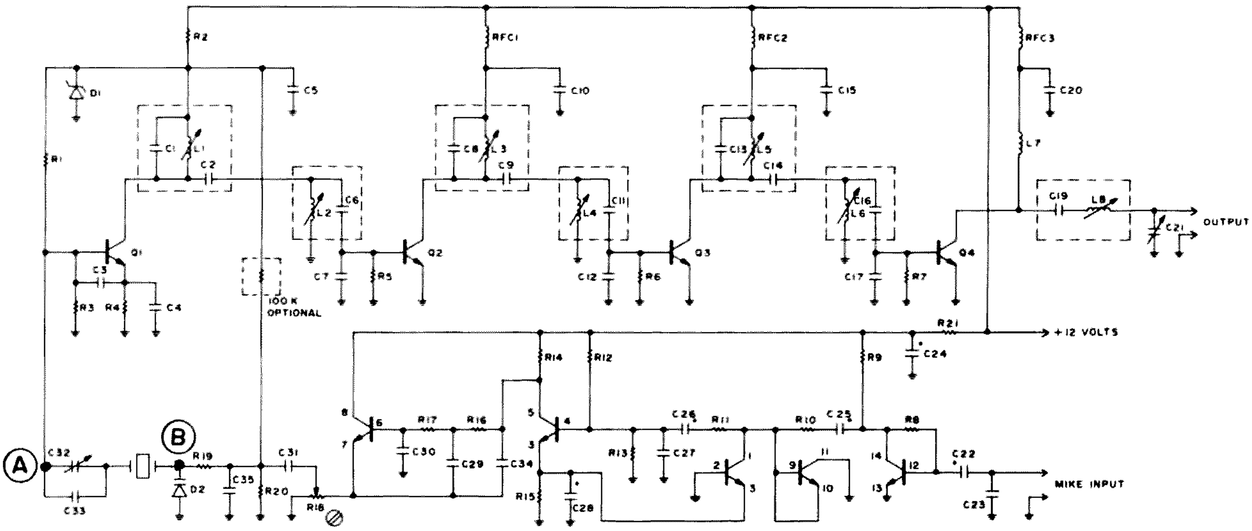

Fig. 4. TX 144/220 schematic. Note: Points A and B are connections for transmitter multi-channel option.

A multi-deck switch is provided for switching both the transmit and receive channels simultaneously. This unit is simple to build and may be constructed in about 20 minutes. Installation is shown in Fig. 5.

Power Amplifier

While one Watt may not seem like a lot of power, it is sufficient in most cases when the operator is using a repeater. In cases where direct operation is desired or where difficulty is encountered in hitting a specific repeater, a power amplifier may be desirable.

Two power amplifier options are available for the builder. Either the PA1501H or PA2501H may be used, depending on whether the operator prefers 15 W or 25 W. For the ten dollars difference in the price of the kit, I prefer the 25 W power amplifier. (Note that, for 220 MHz, only the 15 W amplifier is available.)

Both power amplifiers use two transistors in a broadly tuned common emitter configuration. Ratings on both units are conservative and the builder will most likely get appreciably more power out than the ratings indicate.

The Power Supply

A power supply is not needed for 12 V mobile operation, of course; however, it is a requirement for fixed station operation.

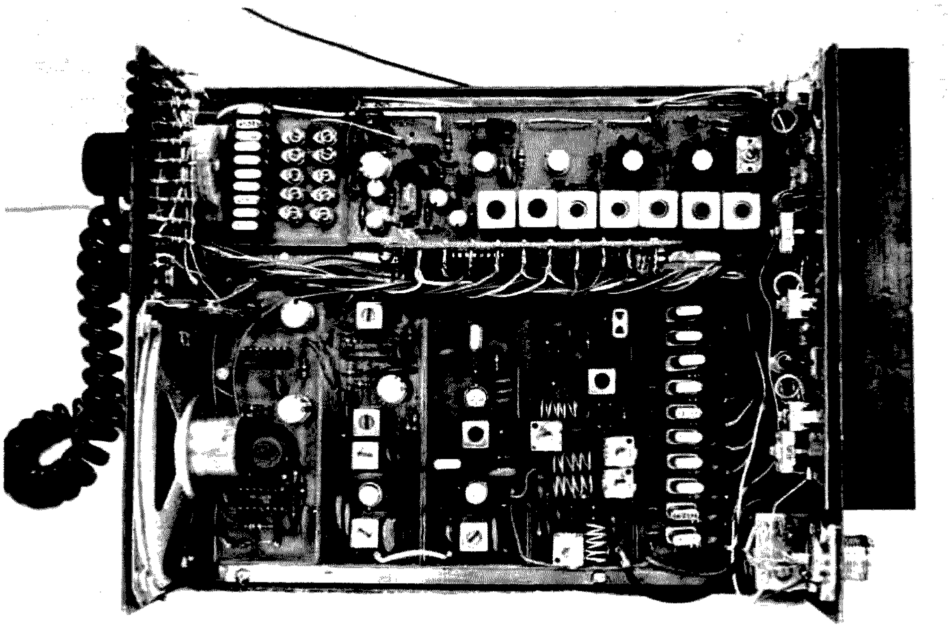

It's just poor practice with solid state equipment to give it the smoke test as a unit. Test everything individually to save time and trouble . . .

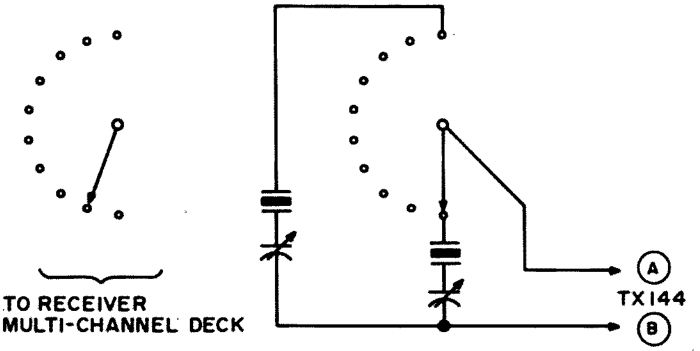

Fig. 5. Transmitter multi-channel option. Note: See Fig. 3 for receiver connections.

While an old car battery with charger may be used to supply the power for the transceiver, this is messy and inconvenient. The power supply used to power this transceiver (when used as a base) was the VHF Engineering model PS-12. It is rated at 12 Amps for 13.6 volts, which handles the transceiver and the 25 Watt power amplifier very comfortably. The power supply consists of a 550 voltage regulator chip driving two 2N3055 pass transistors.

Construction (See Photos)

A case with dimensions 9" x 7½" x 2¾" was used to house all modules. The size of the case is not critical, but the modules won't fit easily in anything smaller. The receiver and transmitter are mounted flat on the chassis as shown, using small standoffs to keep the boards off the chassis. The channel scanner is mounted vertically between the transmitter and the receiver. The power amplifier and transmit receive relay are mounted on the back panel along with the coax connector, the heat sink for the two power amplifier transistors and a small hole for the power leads. The multi-channel decks are mounted up front, with the switch shaft going through the front panel. The squelch and volume controls, the LED channel indicators, and a 2¼" x 4" speaker are mounted on the front panel.

Before mounting the completed modules in the case, it is important to thoroughly test each individual unit to ascertain that it has been wired correctly. It is just poor practice with solid state equipment to give it the smoke test as a unit. It is better to test everything individually to save time and trouble. Note that good instructions for test and debugging are provided with all kits.

This transceiver is very rugged, and requires no special operating precautions other than keeping it out of the rain and away from direct lightning hits . . .

Hookup

Interconnection of all components to make a complete transceiver is very simple as shown in Fig. 6. Number 14 stranded or solid wire or equivalent may be used for all power wiring. Good quality coaxial cable should be used for all rf wiring. Small diameter RG74/U may be used from the antenna relay to the receiver, while RG58/U may be used for the connections to the transmitter and the power amplifier. The relay used may be any double pole, double throw 12 V relay which will fit in the case you have selected. Contacts should be able to handle at least 3 Amps at 12 V and 25 Watts of rf at 148 MHz. VHF Engineering can supply this relay if you cannot obtain one locally.

A simple high pass filter consisting of a 22k resistor and a .022 uF capacitor in parallel is used in the microphone input to give better high frequency response for the transmit audio. Any 600 Ohm dynamic microphone may be used with the transceiver.

Operation and Performance

Several of the units as pictured in the photos have been used in the Binghamton, N.Y. area for quite some time now. The

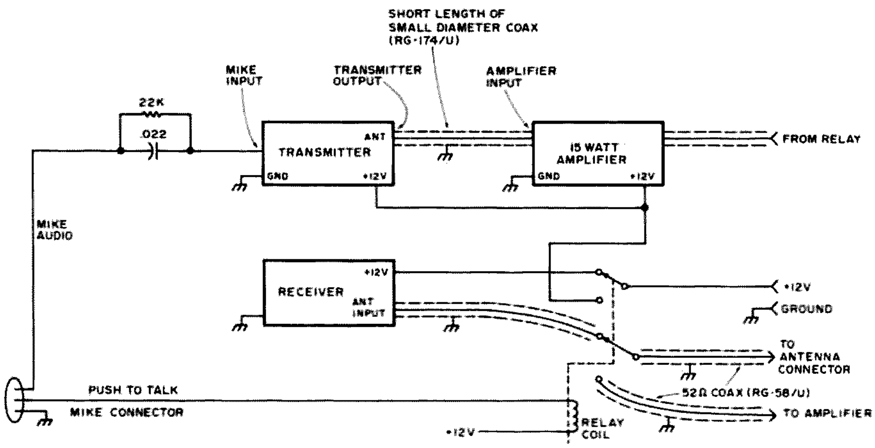

Fig. 6. Basic transceiver connections. Note: Relay may be any 12 V DPDT relay.

units have good audio on both transmit and receive and are virtually trouble free. Receiver sensitivity and selectivity are excellent when compared to most pre-wired commercially available units on the market. The transceiver is very rugged and requires no special operating precautions other than to keep it out of the rain and away from direct lightning hits.

If you ever check into the .22/.82 repeater in Binghamton, N.Y., the chances are good that you will work someone using a transceiver made from VHF Engineering products, and possibly one of the transceivers in the photos. Because of the simple modular approach and reasonable cost, you will also find a growing number of similar transceivers in use from coast to coast across the country. ■

Parts Lists and Board Layouts

Space does not permit the printing of complete parts lists and board layouts. To obtain parts lists, board layouts, and detailed assembly instructions, send $5.95 to:

VHF Engineering
320 Water St.
Binghamton NY 13902

Price lists for boards and complete kits are available on request.

1975 annual index

C. Charles Roukas W2DNY
9 Tuxedo Park
Rome NY 13440

What's All the Noise?

What is a good noise figure, 38-28-37? Oops! We are off on a tangent already and are getting way ahead of ourselves. Let us get back on the straight and narrow. First of all, what is noise? No, we are not talking about din but electrical noise. Static, for one, or atmospheric noise. Galactic (referencing galaxy) for another, or cosmic noise. Of course there is the ubiquitous man-made noise. Last but not least is thermal noise. This is the only noise used to compute noise factor. Thermal noise is circuit noise caused by thermal agitation of electrons.

Since all matter is comprised of electrons and only at absolute zero (-273° C.) are electrons quiescent, it follows that everything generates thermal noise. The higher the temperature an object is subjected to, the greater is the thermal agitation and consequently the greater is the thermal noise generated.

Starting with the antenna, it generates noise as does the coax, the antenna coil, the rf front end active device (tube, transistor, etc.) and as a matter of fact every component in a receiver does. This noise is added to the noise presented to the input terminals of the receiver and is amplified along with the signal. Noise introduced in subsequent stages does not get amplified as much and has little added effect. The overall gain of a good receiver can be 1,000,000 times voltage or 120 dB. 1 microvolt of noise introduced across the input terminals results in 1 volt of noise appearing across the output terminals. One microvolt of noise introduced after the rf stage is only amplified by possibly 100 dB and appears as only 0.1 volt across the output terminals. One microvolt of noise introduced in the i-f stages may only be subjected to gains of 10 dB to 90 dB depending on which stage generates the noise and has no appreciable effect on the output noise.

The noise introduced at the input terminals is subjected to the same overall gain as the signal is. The ratio of the noise measured at the output to the noise measured at the input is called the noise

factor. A simpler way to express noise factor (more commonly called noise figure) is as a power ratio of the signal to noise ratio at the output as compared to the signal to noise ratio at the input. It is a ratio of two ratios expressed in dBs. A receiver with a 10 dB noise figure degrades the signal to noise ratio by 10X. A 5 to 1 signal to noise ratio at the input terminals becomes a 1 to 2 signal to noise ratio at the output. We have degraded from a signal 5X stronger than the input noise to one ½ as strong as the output noise. One would not be able to copy this signal. On another receiver with a 3 dB noise figure it will only degrade this same 5 to 1 signal to noise ratio of 2½ to 1 at the output thus still permitting armchair copy.

We can effectively change the signal to noise ratio of a receiver by adding a low noise preamp ahead of it. In essence you substitute the noise figure of the preamp for that of the receiver. The input terminals are now that of the preamp and not that of the receiver. That (ugh!) 10 dB NF (noise figure) receiver that we used for illustration before with a 2 dB NF (ultra quiet) preamp ahead of it is now effectively a 2 dB NF receiver. Let us keep in mind that the change works equally in reverse. A beautifully quiet 2 dB NF receiver with a (ugh!) 10 dB NF preamp ahead of it is now effectively a noisy pile of junk.

The noise figures used in the above examples were only illustrative. A 2 dB NF may be too expensive to be practically achieved in production. Much better than 2 dB NFs have however been achieved in the lab. I will settle for 3 or 4 dB anytime.

Noise figures are much more significant at VHF and at UHF than at HF. Try this simple test and convince yourself. Remove the antenna connector from an unsquelched VHF or UHF receiver and you will not hear any change in noise level. You may even find one that in fact goes up. This is caused by the input coaxial line removal unloading the input terminals permitting the input noise resistance to increase developing greater noise voltage across it. This will not happen with a properly designed input circuit. By removing the antenna connector from an HF receiver, however, you will find that the noise level drops considerably. The lower the receiver frequency the more pronounced will be the effect. At VHF and UHF most of the noise that we hear is

manifestly generated within the receiver as thermal noise. At HF it is mostly externally generated and represents galactic, atmospheric and man-made noise all picked up by the antenna.

If you have a relatively high NF VHF or UHF receiver, this does not mean that you will not be able to copy signals as full quieting. It simply means that you will require a stronger signal since your signal to noise ratio is lower. It is the fellow with the low NF receiving system that hears those weak DX ("down in the noise") signals that you do not even know are there. Even stacked 11 element beams at 50 feet do not help much. I would rather "pick up" extra gain by lowering my NF. It is cheaper and you do not have to "sweat" the high winds, the ice and the snow. ■

Ham Q Quiz

Glen E. Zook W5UOJ
K9STH 410 Lawndale Drive
Richardson TX 75080

The past few years have shown a remarkable renewal of interest in items and memories of by-gone days. This phenomenon, known as nostalgia, can be carried over into amateur radio. Thus, a list of 100 bits of trivia from the post World War II era has been compiled and listed below. Keep track of just how many you recognize and check the scoring at the end of this article.

Do you remember:

When *73* cost 37 cents?

When there was no *73*?

When Leo had hair?

When Allied was a ham store at 110 N. Western?

30Ds and 16Vs?

The "Old Yankee" and "No kids, no lids . . ."?

When a Hertz was a rental car?

My QTH QSL cards, and those orange ones from Walter Ashe?

The Drake 1A?

When Wayne was an RTTY Editor?

When a base was at Yankee Stadium?

And a collector was from the finance company?

When an 807 was a final and not a drink?

The "Gentleman's agreement" on 20 phone?

When the DX100 and Viking II were king?

BC 459, 455, and 696?

Hunter Cyclemasters?

ICE (not rice) boxes on 2M FM?
When W9IOP won the SS almost every year?
AR3s and AT1s?
Gooney boxes that stared back at you?
The NBFM craze?
Cutting the supressor grid wire on 1625s?
When 11 meters was a ham band?
When we got 15 meters?
When International Crystal built ham kits?
Geloso VFOs, Receivers and Transmitters?
The "Dream Receiver" (the one I had was a nightmare)?
Pacemakers that weren't a medical device?
When Novices could operate 2M phone and Techs not?
HFS and NC173s?
Swan 120s, 140s, and 175s?
When a Tempo was a music speed?
Globe Chiefs, Scouts, and Kings?
When a drain was in the middle of the sink?
And a gate was a part of a fence?
Finding out your new call from the Little Print Shop?
When ham licenses were free?
Lincolns and Little Lulu?
When the KWM-1 was the latest thing out?
When there wasn't an S-Line?
When Novices were Crystal controlled?
Link and Dumont?
6AG7s in GG?
20As and tubeless VFOs?
2As, 2Bs, and T-4s?
Invaders and Marauders?
Bandits and pedestals?
Thunderbolts, Challengers, and Harvey Wells?
813s modulated by 811s?
Well, persons, you are now at the mid point of this great listing of amateur radio trivia. How ya doing so far? Well, it's back to the old list. Do you remember:
Swan Mark I and Heath Warriors?
Senecas, DX35s, DX40s and controlled carrier?
When there was only **QST**?
When there were two?
FM Journal and *rpt*?
Cosmophones and Eldicos on SSB?
Model 12s and 15s not those quiet 28s?
Sunspots, with JAs on 6?
When KWs were built, not bought for $200?
Building your first transmitter?
Your very first QSO?
When portable meant carryable by two persons?
CK722s?
Peanut tubes and acorns too?
Comet, Apollo, Zeus, and Venus?
FM210 plus PA210 from Galaxy?

Globe Champs and 'trotters?
Four-20s and Super Pros?
Gladding, Genave, and Varitronics too?
Prop pitch motors and selsyns with gears?
Morrow and Lakeshore with Sonar to boot?
When a Sentry was a soldier?
When a Swan was a bird?
When Birds only flew, not just read watts?
When Wayne was Editor of that "other" magazine?
6-up?
Carbon microphones and high impedance headphones?
Nuvistors?
When a California Kilowatt was just that?
Your first Field Day?
Mel Shadbolts TV handbook?
Gotham ads didn't have "20 Meters is murder..."?
When the average novice station was a DX40 and SX99?
Ringos and Rangers?
Tuning units from BC375s?
Plug-in coils?
6AG7-807, modulated by Pr. 6L6s?
1296 and APX6s?
SCR522s?
When Tandy only sold leather?
Flying spot scanners and the 931A?
Polycoms on 6 and 2?
Multiphase Products?
Cheyennes, Comanches, with Pawnees and Shawnees?
416Bs and 417As?
1625s at 25 cents each?
Radio Row?
When JAs were "rare"?
Your first DX contact?
Star Roamers and Ocean Hoppers?

Some readers may feel that enough information has not been given in the above quiz. However, if you really recognize and/or remember the trivia then you won't need more information. Be fair and score yourself according to the following:

0-10 "Honey, that's Daddy's *73*, your *Sesame Street Magazine* hasn't come yet."
10-20 The "Arkansas Aardvark" is on channel 11.
20-30 Better, but you're still wet behind the ears.
30-40 You can hold your own at the local radio club.
40-50 Venture forth on 20 meters.
50-60 You're a full fledged ham.
60-70 Qualified to B.S. at any convention.
70-80 Ready for 75 meter phone.
80-90 Qualified to write trivia for *73*.
90-100 "Hiram Percy who????" ■

Don Keith WA4BDW
462 Ridgewood Ave.
Fairfield AL 35064

Saving Ham Radio

You've seen it in every ham radio publication you've picked up lately. Our hobby is in trouble!

The editors of the magazines think so. That's why they are editorializing. The equipment manufacturers think so, too. That's why they are slowly going out of the amateur radio business. How many of them would still be with us if it had not been for the two meter boom? The FCC recognizes things are in bad shape, also. Those sweeping licensing structure changes we've heard rumored about so long are now official proposals. The Commission knows it must have numbers behind it in Geneva in 1979...numbers to back up requests for more of the spectrum, or just to hold on to most of what we now claim as ours.

How can we save our hobby as we know it? Obviously, we must get more people into ham radio. As I see it, we have two great obstacles staring us in the face, though. One: that great mass of amateurs out there in radio land who either are ignorant of the facts or regulatory life, are concerned but are too darn lazy to do anything about it, or are too short sighted (the famous.......fewer-hams-equals-less-QRM-for-me syndrome). When these guys are left with nothing but the upper megacycle of ten meters in which to pursue their hobby, they will probably be the first to point their fingers at Newington, Wayne Green, and the other more visible spokespeople for ham radio and let out a multi-decibel "Wha' happened?"

Obstacle number two, I believe, are the new FCC proposals, well intentioned as they may be. I'm afraid they will tend to make more than a few potential amateurs hold off on getting started. Why should I start work-

ing on that impossible-to-learn code when I can just wait a spell and get on two meters without it? Why don't I just wait for the dust to settle? We are all prone to procrastination. And regulatory wheels grind exceedingly slowly in these bureaucratic times. I am afraid the licensing structure is to be in limbo for some time yet. Whether docket 20282 is designed to save amateur radio or to bail the FCC out of the CB quagmire is beside my point. It can only serve to further becloud the problems we already have.

But before this article gets too depressing, I think I should hasten to add that I think I see some hope. I don't think W2NSD, ARRL or the FCC can bail us out of this one. I think Pogo said it well: "We have met the enemy, and he is us." We are our own enemy if we allow apathy, ignorance or myopia to destroy our hobby. I think it is time the quarter-of-a-million of us who are hams took the bull (if you will pardon the expression) by the horns.

Fact: ours is the most fascinating and enjoyable hobby going. What other hobby offers as many exciting facets as amateur radio, mixes so well with other interests, offers so much opportunity for public service, and gives so many chances for personal accomplishment?

Fact: it just ain't that hard to become a ham. Any average moron can learn the code and enough radio to get a license. There are beaucoups books, courses, cassettes, tapes, study manuals, Q and A manuals, etc., available cheap. Help is there for the asking in most places. It is an honor to get a license, sure, but anyone with the will to learn and the gumption to apply himself to something worthwhile can do it.

Think back. How did you get started? Probably, you lived near a ham, worked with one, or had a brother-in-law who fooled around with the stuff. Most people started that way. Does that mean you have to live next door to a ham or marry his sister to get into the hobby yourself? It is ironic that a hobby that is based on communications depends on word-of-mouth for its growth.

We have a hobby we should be yelling and screaming about, and we sit on it like it's the map to the Lost Dutchman mine. When was the last time you demonstrated the two meter rig for the guys at the office? Or originated a message for some neighbors? Or volunteered to give a talk on ham radio for your civic club?

That, folks, is PUBLIC RELATIONS!

And ham radio PR is lousy!

Far too few people know what, who or where we are. That image of an eccentric radio nut wiring up his basement and screwing up the neighborhood TV reception is still going strong. And no wonder practically everybody persists in asking if I still have that "CB" in my car.

Next question: *why* is ham radio PR lousy? Because it takes initiative, inspiration and sweat. I certainly think the state of our hobby, and the prospects for its death (at least as we know it), should provide enough initiative. I am about to list ten ideas I hope will give you or your group some measure of inspiration. But there's not much I can do about the sweat part. If you are not willing to work some to see that my son and your kids (and maybe even you) have a hobby in a few years, then maybe ham radio isn't worth saving after all.

Some of the things I'm going to mention are not new or especially imaginative, but maybe you never thought of them before. Some have been, or will be, tried by the Birmingham Amateur Radio Club with varying degrees of success. If you give them a try, look out. You may run into brick walls with some. But you will get far better results than you dreamed with others. I only hope you will take the ball and run with it. It is fourth down and time is running out.

1) Get yourself or representatives of your group on a television or ratio talk show. The stations have to come up with an interesting show every day. Do them a favor and volunteer. It is best to tie in appearances with the start of your club's code-theory class (you club does have such a thing, doesn't it?), Field Day, or the like. Make sure interested parties can get in touch with someone for more info.

2) Land a feature story in a local newspaper. A story about a handicapped ham or a local amateur working through Oscar should be the answer to an editor's prayer on a slow news day. Make sure the editor knows how to get in touch with you and that you have a feature idea or two anytime he needs it.

3) Tie yourself in with local events. If you or your club provides communications for a parade or during a disaster, phone the newspapers, radio and TV, and tell them. They may never know otherwise. We got good newspaper and TV coverage when a Birmingham amateur heard first hand

about the recent Peruvian earthquake. He called local media and soon found himself entertaining a television news film crew.

Don't be modest! Look where PR got Hugh Hefner.

4) Get a booth at the county or state fair. Sure, it's a headache to keep the booth staffed and handle all that junk traffic. But notice how many people come back to ask questions.

5) Demonstrate your radio for school science classes. The League has a great OSCAR demonstration geared toward schools, too. And the club could probably spare a little beer money to put ham radio books in some school libraries. Be sure to stamp your address or the club's address inside the books.

6) Show off ham radio to the Boy (and Girl) Scouts. Invite troops to club meetings and hamfests, show them ham radio films, attend their get-togethers and answer their questions. Check with local scouting officials. They are in the phone book.

7) Set up a booth at the next Citizen Band jamboree, or what ever they call them. What!?! No, I'm not blowing a final. How many frustrated hams do you imagine there are on 27 MHz? How many would gladly go straight and sin no more if they knew what we are really all about? Some of the best hams I know are reformed CB types.

8) Man a demonstration station in a shopping center. More junk traffic and interminable Muzak, I know, but it sure gets to the people. But, you say, you mostly get women into those places. Don't you agree that one of the biggest weaknesses in ham radio is the failure to attract more of the ladies into our midst?

9) Fire off a news release to the papers at the slightest excuse. Write the release up in newspaper style or like radio spot announcements and send it in. Some will never see print, but none will if they are not sent in. Club activities, interesting occurrences on the air, the implementation of some of the other projects mentioned here...all make good stories.

10) Be a spokesman for ham radio every chance you get. Stand up at your Lions Club and announce the next ham club meeting. Present a program on ham radio to the Jaycees. Explain to the guys at the bar the difference between ham and CB radio.

All this sound like too much trouble? See you in the upper one megahertz of ten meters! ■

Jerrold A. Swank W8HXR
657 Willabar Drive
Washington Court House OH 43160

Patching Tales

Over many years of phone patching there have occurred many memorable incidents, some sad, some hilarious. I would like to relate some of both.

One morning about 3:00 a.m. the phone rang, and I was asleep. I answered, and the operator asked, "Are you Jerry?" I said I was. She replied, "I have an emergency call for you." The caller said, "This is John Katsafrakis. I am at Stanford University, and we must get through to Byrd Station, Antarctica. Can you get them for me?" I called Eights Station and raised Byrd via Navy telegraph. I ran a half hour patch, and when it was finished, Dr. Katsafrakis told me that they had released a space craft from Vandenberg Air Force Base, and it was tilted. Someone tried to correct it, and had overcorrected, causing it to tumble. They wanted readings over the Pole, and also predicted that it would fall to earth soon, which it did. I asked him how he found me. He said, someone said "try Jerry in Washington Court House," so I called the operator and got her to find you.

One of the incidents in my phone patching gave me a certain amount of amusement, and yet it was very sad for one of the principals.

A Navy man named Sam was stationed at KC4USM, the "Radio Noise" station about 1¼ miles from Byrd Station in the Antarctic. One night he called me with a plea for a phone patch to Boulder, Colorado. He had received in his mail, which arrived just before the Winter closed all flights to the Ice, a letter from his fiancee that really shook him up.

Frank, a good buddy of his on the summer crew who had left on the first plane out, had stopped in Boulder to see Sam's fiancee and deliver Sam's messages of love. Frank found he liked the young lady himself, and after a quick courtship they became engaged. Frank was on the way to a new duty station in the Canary Islands. The girl, Alice, agreed to get married and go to the Canaries with him. She wrote Sam and told him this.

Sam was desperate. He could not get any letters out for nine months, and could not send tapes. He begged her to wait until he could get a tape to her, but she refused.

She said, "You never

asked me to marry you, you simply said you were going to the Antarctic, and would see me in about a year. Frank and I get along with each other much better than you and I, and we agree on many things. I am in love with Frank, and to wait for your letter would be useless." He told her he had great plans, and so forth, but she was firm and refused. The patch lasted about an hour, and was one of the best I had ever run. Sam was very appreciative, but downhearted. I was glad that he had not been in the predicament of having to argue his case with a poor signal. For a year afterward, I heard on the air remarks about Sam and his patch. We must have had one of the greatest listening audiences in ham history. He said he was a quiet, scientist type, and not given to expressing himself. I kept thinking back to the John Alden story, with one difference. Frank said to himself, "Speak for yourself Frank."

One of my more weird patches came one night on a patch to nearby Columbus, Ohio. I gave the operator the number, and a man answered. I asked for Jean. He said "Jean is not here any more. She married that guy over at Lancaster when her husband died. Who did you say is calling?" I said, "It is her husband from the Antarctic, South Pole Station." He replied, "Well, I'll be darned. I thought he was dead." I dropped the line for a minute, and heard the man at South Pole saying, "Jerry, you have the wrong number." I went back to the other man just in time to hear him say, "I'll tell her" and he hung up. I asked the operator to redial it, and found that she had misdialed the prefix. I got another Jean at a different prefix in Columbus, and got the wrong suburb.

Once I had an experience that made me appreciate helpful operators. I had a call to South Carolina, but got a wrong number. I had the operator redial it, but still got no where. I asked the operator what the number was for the person I was calling, after checking with the man at South Pole Station for confirmation. She told me it was an unlisted number. I explained the circumstances, that the man was in Antarctica and wanted to call his wife and had no other means of reaching her. She was adamant. There was an absolute rule about giving out unlisted numbers.

I said, "I think I have the number almost right, perhaps I am off only one digit." She said, "Why

don't you try running it down one digit at a time?" I said "Do you mean getting ten people out of bed at 3:30 am?" Her reply was, "Oh, it won't be that bad. Why don't you try it, starting at the bottom?" I thought that over and decided she was trying to tell me something, so I called the number again, with 1 as the final digit, and got my number. She came back after the call, and I thanked her. She said, "You are very quick." I felt real good about such a nice operator.

My very longest patch lasted an hour and a half and was a series of relays. A man at Byrd station wanted to talk to his fiancee in Hawaii, as she was to leave there in a week and go to San Francisco to meet him when he came home in a few weeks. She was in a hotel in Maui, and I did not have any chance of getting a direct patch. I ran down a station in Honolulu, KH6HP, in a downtown office building. He could not hear Byrd Station, and Byrd could not hear him, but both stations were copying me fine. However, I was using phased verticals, so when I was talking to Honolulu, Byrd Station could not hear me, and when I was talking to Byrd Station, Honolulu could not hear me, so it was a real slow operation. Byrd to me, to Honolulu, to Maui. KH6HP had no patch, so it was all one way. The reply came from Maui, to Honolulu, to Ohio, to Byrd Station. KH6HP had to take notes and then try to get the messages straight to me, then I had to do the same to Byrd, since nothing could be sent direct. Then the whole thing had to be repeated going west. We got all the information passed, and confirmed. When I finally signed with KC4USB and KH6HP, the phone rang. It was the mother of a man who had been stationed at Byrd Station a couple of years before, and who had a receiver and vertical antenna, and who was listening. She said, "Jerry, how I wish I could have had a recorder to record that patch. It was the finest thing I have ever heard." I had patched her son many times when he was there at Byrd and she had gotten him to put an antenna up for her, and bought a receiver, and she sat up at night listening to Antarctic patches. I appreciated her call. She lives in Decatur, Indiana.

There was another time I had to run a patch for John Katsafrakis in Palo Alto to Byrd Station which I feel was rather interesting.

I got a call on the phone

from John, and he had been trying to get a message to Byrd and no one seemed to be able to raise them. He had scheduled a space craft to be launched from Vandenberg Air Force Base in California at midnight EST and had to postpone it because they could not get hold of Byrd. They had then rescheduled it for 1:00 a.m. EST and now it was almost 2:00 a.m. and they absolutely had to cancel if it passed 2:00 a.m. because of another launch being scheduled.

At 1:30 I called McMurdo Sound, KC4USV, and they had been unable to raise any other Antarctic Station all evening. John Katsafrakis had scheduled this launch with plans for no other station than Byrd to take readings. All the time and expense would be down the drain if they didn't get hold of Byrd Station soon.

I remembered that K1TWK in Ipswich, Mass. had a Teletype going into McMurdo which also ran to Byrd Station. I phoned him and got him out of bed, and told him to get a message to Byrd in a hurry. I gave him the name of the man wanted. With the phone line open to California, and the receiver set on 7.290 MHz, our regular traffic frequency, at 1:58 a.m. the man John wanted came through ready to go. They signaled the space craft and the launch took place at 2:00 on the dot.

After the furor died down, I asked the men on the Ice what the problem was. No one had realized that it was MIDWINTER'S NIGHT. This is the greatest celebration in Antarctica. It is the night the sun starts back South, and the mid point of the long Winter night. All stations shut down and the men gathered together for a grand and glorious drinking party. They tried to get through from Byrd Station as soon as they got the Teletype, but could not raise us because of weak signals. Three of them ran the 1.3 miles to KC4USM, Radio Noise Station, which had a better V antenna, and arrived in time for the launch. It was pitch dark and cold and they had to follow a hand line for safety. They knew nothing of the launch because no one had dreamed that Byrd would not be obtainable. It was the usual practice for the two or three men at KC4USM to go into Byrd Station whenever there was any kind of party, to join the 30 or so men at Byrd. It was also common practice to take two or three tubes out of the KWM2A at the stations so no drunk would get on the air and start running "patches."■

Neil Johnson W2OLU
74 Pine Tree Lane
Tappan NY 10983

Work a Novice

One of my amateur friends told me that he was anxious to increase his code speed and that he was putting in more time on CW in order to obtain his Extra Class license. He mentioned in passing that he would go searching for a QSO, and if he found no takers on the low end of the band, he would migrate up to the Novice segment and work a few of the newcomers just for practice. This remark stuck in my craw. Late one night, when the long "skip" was in effect, I found no CW signals on the low end of forty meters, only Mexican phone stations, so I tuned up to the Novice segment.

After getting accustomed, I found this subband to be a beehive of activity, more often than not. Some of the signals may be a trifle difficult to copy, but by and large they are not vastly different from those to be found in other sections of the same band. It stands to reason that most of these chaps are sending at a slower rate than you will encounter in other CW sections of the band, but again there is no hard and fast rule. Some of these younger operators are quite proficient with the key.

Most of the Novice operators that I have worked were pleased to have made contact with another amateur with a General or higher class license. They impress me as being eager to learn, so you might try to set a good example when you work them. Some operators may regard this as some kind of chore, but really, it isn't. You might look upon it as a bit of enlightened self-interest, for you are helping to mold — hopefully for the better — the OMs that will be the Generals and higher rated licensees of the ham bands of tomorrow.

Sometimes when I find no particular satisfaction in some QSO that I've experienced on the low end of the band, I make it a practice to go up in frequency and work a Novice or two. Perhaps I never did look upon these QSOs from the Novice point of view until a YL operator from the New Orleans area included a short note, along with QSL card, thanking me for taking time out to come up and try for QSOs in the Novice sub-band.

If you happen to be on

either coast, or possibly in a hard-to-get state, you may find yourself quite popular. In my own situation, I find lots of WN6 and WN7 hams pleasantly surprised that their relatively low-powered rigs are able to span the continent..... these QSOs are often after midnight, but judging from some of the enthusiastic remarks on their QSL cards, you would think they had succeeded in contacting somebody on Mars!

If you have a little time to spare, and a small measure of patience to go with it, why not tune up to the Novice segment of your favorite band? Chances are you will be pleased by what you hear. You will learn that amateur radio is not going to the dogs after all. And here's your chance to make it just a little bit better. Why not give it a whirl? ■

John A. Carroll K6HKB/1
34 Clark St. Apt. 13
Arlington MA 02174

Capacitors Unmasked

When a circuit refuses to behave the way it's supposed to, one of the places to look for a cause is the capacitor. Disc ceramics and electrolytics are popular because of small size and price, and most of the time they do the job in bypassing and coupling applications. When you measure the impedance at audio and rf frequencies, however, many of them look like anything but a capacitor.

In disc ceramics and the older paper types, a major cause of non-capacitive behavior is dielectric loss. In some materials, a fast-changing electric field outruns the ability of the material to keep up, so energy must be spent to establish the new value of the field. Since energy can only be drawn from a circuit when the current has a component in phase with the voltage, the capacitor acts as if it had a resistor connected across it. Neither the resistance nor the capacitance is necessarily constant with frequency; the resistance probably won't be. Ceramic capacitors rated under 100 volts may have as little as 1/10 of the marked value at 1 MHz even though they measure up at dc; higher voltage discs are more likely to be the other way around. Types vary, so this rule only serves to illustrate how widely values can fluctuate throughout the spectrum. I have only one actual value for a shunt

resistance. A 20 pF disc that I tried to use in a crystal filter looked like a 10 k resistor at 700 kHz, and it lowered the Q from 5000 to 3. So beware of using these things in tuned circuits.

Most people have heard of lead inductance, in which the leads of a capacitor act like an inductor of a few nanohenries, causing the component to series-resonate somewhere in the VHF region. Electrolytics can also develop inductance around surface irregularities in the foil, as well as in the foil itself, causing a resonance in the audio region, after which the impedance climbs rapidly. This is why you'll often find a small bypass capacitor connected across an electrolytic in commercial gear.

Another HF and VHF effect to consider is skin effect in the leads. Rf current doesn't penetrate metal to any great depth, so the leads look much smaller than they really are. Their apparent resistivity rises with frequency, and may put a significant resistance in series with the capacitor. This can be handled the same way as lead inductance: Shorten the leads to an absolute minimum, especially in VHF equipment.

Sometimes a capacitor, especially an electrolytic, may turn up with a true shunt resistance due to leakage. It doesn't have to be internal, either. If a suspected unit looks dirty, try washing the outside of the case.

The point of all this is that a capacitor, or for that matter any component, is never as simple as its symbol or diagram. When a newly designed circuit misbehaves, that fact could be important. ■

Richard Mollentine WA0KKC
19 Edgemere Court
Olathe KS 66061

Why Fight It?

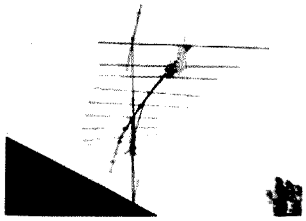

Windmilling is synonymous with large antennas and rotors without braking facilities. If your beam antenna never turns in the wind then FB on to the next article. However, if your beam is a "Horatio Hornblower," then read

on. Actually this gets into the psychology of the thing. If you will bury your pride and admit that the darned thing turns every time the gusts blow, and that the built-in gear torque is insufficient to stop it, half your problems are over. "Why fight city hall." Now the only major

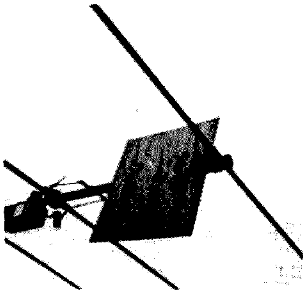

problem is that a physically balanced beam won't turn in the most advantageous direction — that is, into the wind where the least wind resistance would be, along and in the same direction as the boom. Since the wind blows equally on the front and rear at the same time, the boom is at a 90 degree angle to the wind. The result is wheezing, pulling, whistling, and a massive strain on the guys, hardware, mast, boom, tower, and the "whole ball of wax." Now if you will admit to yourself that the whole thing is going to move anyway, then why fight it?

Let's take a positive attitude for a change. Have the wind work with and not against us. By installing a small tail fin on either end of the boom, the antenna will automatically always put its thinnest side, or least resistance into the wind; any material, plywood, plastic (invisible), formica, or any other dielectric will do. It won't effect the radiation pattern in the slightest. If plywood is used, better give it several coats of shellac. Run two "U" bolts through it with double nuts and oversized flat washers on all sides. Then when the big blow is over you can reorient and recalibrate the rotor box (which would have to be done anyway).

By now you have probably discovered you can't rotate the array during a wind storm anyway, as the whole thing slips 90 degrees against the wind.

Don't use too big a fin. We only want the big winds to move it, and not the small breezes that the meshed gears could normally contain anyway. With the beam facing into the wind and not against it perhaps you have prevented complete collapse of the entire structure.

The photos show my six meter twelve element "home brew" beam with a commercial eight element two meter antenna above. While not the ideal situation, it will do until I can afford a rotor with a built-in mechanical brake.

Robert Magraw K0CBA
2401 Gladiator
St. Louis County MO 63026

Greetings, You Have Been Selected

Ah, a nice day — for May in St. Louis at least. Let's see, things to do . . . Well, I think I'll check the old mail box and see if any of those 85%'ers might have had a change of heart and decided to QSL. The guys in the States that are hardest to work on good old six meters seem to display this propensity of not . . . HELLO? What's this? A notice from the U.S. Post Office or Postal Service (you know, the outfit that cancels those pretty QSL's on BOTH sides). A registered letter awaits me.

(Sigh) . . . we'll just jump in the faithful Jeep and drive down to the Post Office.

Upon identifying myself (all the way back to my ancestors on the Mayflower), a very official looking letter is placed into my determined grasp. Official indeed! U.S. Government markings all over the thing. The last time I saw anything this official, it said something about "Greetings." They wouldn't, I mean they couldn't, but, but I'm too old. Must settle down and open the envelope. After all, I just signed Lord knows what to get it. And get it, I did. After fourteen years as a Technician, a happy, fun-loving (if not slightly pudgy), died-in-the-wool Technician, I received the F.C.C.'s version of "Greetings," a recall.

The day following the receipt of this doomsday message is pretty hazy in my memory but the XYL later told me that for the most part, I was hysterical

and incoherent. At times like these, we non-drinkers are severely handicapped. This will not do. Must pull myself together and face the situation calmly and cooly and think of some flim-flam excuse to stall them off until the next time they swoop down on St. Louis. Yeah, that's it, that will give me an extra three months to get it together. Let's see — dit-da is "A," dah-dit-dit-dit is "B" or "D?" Code records. Gotta have code records not to mention theory books. Gotta find out about those little trans-sa-ma------- goodies that replaced tubes. I constantly had to repel the urge to send in the ticket and slink off somewhere and slash my wrists. Every idea ever conceived to aid in learning and improving the code was considered. Nothing was overlooked. The depths of my panic knew no bounds even to the point of recording several code lessons on cassettes, putting the cassette on a timer and having it try to probe my sub-conscious during my sleep. As weird as this sounds, I really believe it helped. At least, it got me to the point that I had enough nerve to listen to the forty meter Novices. Listen with what? A quick call to my buddy, Bill WA0KBZ who is a true mercenary's mercenary, and I was all fixed up with an Allied AX-190 receiver and a greatly deflated wallet.

Disregarding two of my original ideas of sending in the ticket and the flim-flam excuse, I attacked with all the determination of the chief boiler stoker on the Titanic. I thought it was a good thing they extended the Novice ticket to two years and I was thoroughly convinced that it would take that long to complete a QSO of any length. It wasn't easy but after about two weeks, I could make sense out of that noise. I became fanatical. Working shift work, I was able to copy for three to four, and sometimes five hours a day and go to work to relax.

WA0TXV Bob sicked me on to W1AW. After a few nights of people taking their hate out on the League by getting a hundred or so cycles to the side and CQ'ing and QRM'ing, I deemed that a good CW filter was in order. In my neophyte stages, I didn't realize that the AX-190 and the CW filter only represented the beginning of a never-ending outlay of money.

For the following several days, W1AW was copied and recorded through my new (and expensive) CW filter. The recorded tapes were secreted away like a starving squirrel that anticipated yet harder times. Finally, good old midnight shift

came to pass and as this time of year is a slow period in my line of work, the theory books and previously secreted tapes accompanied me to work. It took about eight minutes of dit-dah's and I was up to my bellybutton in disgruntled fellow workers. They had suffered with my "weird" hobby in the form of boring conversation for the last several years but this was the limit. Being the kind of fellow who takes friendly suggestions to heart, I decided to appease this potential lynch mob and suffer silently with an earphone. Now I have nothing against any ethnic group or nationality but I just can't understand what the Japanese had in mind when they contrived those nasty little earplugs. Why didn't they design one that would fit the ear?

The thing was starting to take shape — transistors, formulas, chokes, taps and all the accoutrements of "wireless" started to make a little sense. The code was coming along swimmingly. Visions of a General License with my call kept popping into my code-weary mind and on every occasion that I struggled through the ominous 13 wpm barrier, I sort of giggled inside. The first instincts of mere survival gave way to a more human feeling of REVENGE! Challenge my integrity will they! I had ambitions! I kept thinking of the mean old F.C.C. examiner grovelling in disbelief — not only passing the Tech, but WOWing him with my new-found CW prowess.

The day of decision was finally upon me. I was to be at the examination station at 9:00 a.m. At 5:00 a.m., my eyes popped open and I eagerly got in the proverbial last minute of CW and theory study. At 8:00 a.m. I departed the studios of radio-free K0CBA and plunged forward into the St. Louis sunshine — a raging downpour! The weather should have made me reconsider my idea of a flim-flam excuse. However, with the well wishes of the XYL, the "go get-em" of the local six meter gang and a few well-meaning threats of, "You had better pass because we can't take any more" from the guys at work, I continued my sojourn.

Upon arrival at the Federal Building, I couldn't find a place to park. Another bad omen? Nonsense, I forged ahead as if I had good sense and finally located a parking meter, but it was a "One Hour Only" parking meter. At this point, confronted with the prospects of failure in the amateur fraternity, a tick-

et (St. Louis Police Department type), and possibly a humongous tow bill, all I could do was to hum, "Cast your fate to the wind" and fight back my own downpour which was about to trickle from my eyes and go in and scope out the situation. I was a half-hour early and the examination room was still locked so I tried to make conversation with the other hyper-tension stricken people that had gathered under the "NO STANDING IN HALL" sign. My mind briefly contemplated the Governmental wisdom behind the placing of that sign and the fact that there wasn't a chair or waiting room to be seen from horizon to horizon.

A young lad who was observed in the corner with bloodless white knuckles, frantically scanning his license manual, would look toward heaven, mumble to himself and then would appear to "chew" a bit of the book's ragged corner. I got to talking to a fellow who introduced himself as "Dale WN0 something or other" and he mentioned that the code was a snap but he was a bit concerned about the theory. I thought that was a strange thing for him to say. If he had his wits about him, he surely would have been terrified of both elements, just as I was. I quickly ran through the alphabet in my mind. A poor choice of pastimes, and I suddenly realized that I couldn't recognize my own call. I reached in my pocket for a pen and a piece of paper. A note attached to the door, proclaiming that I had been carried away by a roving band of gypsies and would probably be released unharmed in time to take the test in three months, would surely tug at the examiner's heart and he would reschedule me for the next time in town. Surely a fellow couldn't be held accountable under such circumstances. I started to compose the note a bit too late as the door opened and there stood the examiner. He foolishly assumed that because I was closest to the door that I was the most anxious. He asked me what Class I was here for as he relieved me of my F.C.C. provided "610" and "examination appointment." Before I could stutter out an answer, he looked up from my papers and said, "A Tech recall, huh! "Sit over there and fill this out." I took the paper he gave me and wobbled over to the indicated seat. Any composure that had remained with me in the hall, ran down my leg. As the others filed in, he looked at them but always seemed to fire a glance my

way, or so it seemed. I consoled myself that he wasn't really a bad fellow who had a personal desire to snatch my ticket, and that he probably just learned to look at people like that from when he headed up a concentration camp.

As he passed by me, handing out the paper for the 13 wpm test, I said, "Excuse me, sir, could I have a try at it?" With a patronizing smile, he gave it to me and proceeded with his tasks. After several eternities, the silence which heretofore was only interrupted by nervous laughter, pencils thumping on desks and an occasional drop of perspiration rolling off my proboscis and hitting my paper, was broken by an ear-splitting, "Is everyone ready?" After 6 v's which gave me no trouble, I realized that this was it! I have a real knack for being able to size up a situation. I got the first few words out but then a miss, and another, then a few more words, then the misses again. After the machine sent ar, I started to try to do some fills. No dice. The papers were gone as quickly as they had come. "You may all step into the hall while the papers are checked." After a few minutes of staring at the "No Standing In The Hall" sign, I went into the room to watch. I saw a booklet on his desk which I think was entitled, "The stacking of papers on a desk so no one can see if they passed" and quietly left the room. I amused myself by running the six hundred yard dash to my parking meter, narrowly escaping the clutches of the law which I considered to be a good omen. I walked into the Federal Building as if nothing happened and then it dawned on me that it was raining and I was soaked. So much for that good omen.

Upon being reseated with the others, the "thumbs up — thumbs down" session started. I was in the latter, however, all was not lost. I squirrelled through enough for 5 wpm and so it was on to the theory. Osmosis is a fact and I had inadvertently soaked up enough that I made the theory in pretty fine style.

After the whole thing was just a bitter memory from the earlier part of the day, I became even more obsessed with getting my "Big Ticket." The levity of the situation only now comes to light as I gaze upon my shiny new "Advanced License."

The story doesn't really end here. After all, in September, I'll have my "Year In" and then I'll have a shot at the "Biggest Ticket." ■

Jerrold A. Swank W8HXR
657 Willabar Drive
Washington Court House OH
43160

Save Money on Coax

If money is worth anything to you, then the easiest way to save it is to quit using RG8 for anything lower in frequency than 21 MHz, and shorter than 100 feet, regardless of power unless you are running more than the legal limit.

If you are using a dipole, which is about 72 Ohms, and feeding it with RG8, you have an SWR of 1.5:1. If you fed it with RG59, the SWR would be 1:1 at resonance. The loss in RG8 at 1:1.5 would be a little more than .7 dB, and the loss in RG59 would be about 1.6 dB at 21 MHz. The difference would be barely noticeable on the air, even with careful listening. At 7 MHz, the difference would be about .45 dB, and not even discernable.

The power handling ability of RG59 at 20 MHz is 860 watts, and if you use foam coax it is about 1100 watts of steady RF. This is enough for any legal amplifier, and of course for use barefoot there is absolutely no need for RG8, even for a 750 watt PEP transceiver.

The most ridiculous of all, of course, is the ham who insists on running RG8 in a mobile. Many of them seem to feel that with a mobile you need all you can get, but RG8 is harder to handle, and no one could possibly hear the difference between RG8 and 58 or 59, with only 20 feet of line.

If you are running a 50 Ohm antenna, there is some reason to use RG58 instead of RG59, but not much. The SWR will be 1.5:1 but the greater loss in RG58 will almost equal that due to the mismatch, even at 21 MHz.

Oddly enough, there is a good reason why in some cases RG8 has its advantages. The reason is that you can't bend it at sharp angles. Running coax with sharp bends is not good for transmission, and since RG8 won't bend in square corners, it is better at very high frequencies. Wouldn't it be just as easy, and cheaper, to just make sure that your bends are gradual, rather than pay the extra cost?

Many hams buy surplus RG8 and save money, they say. If you do that you had better check the loss in what you buy. All loss tables refer to NEW coax, as you will find out if you measure it. ■

Jerrold A. Swank W8HXR
657 Willabar Drive
Washington Court House OH
43160

How to Pass Exams

When I went to school many years ago, I was very lax about studying, but I had great interest in the subjects I took. While in class, I was careful to observe the teacher and try to understand what she was saying. I was the son of a construction engineer, and had traveled so much that I had never been to school in the same state for two consecutive years. Thus I was a sort of loner in the schools because I didn't know any of the kids from previous years. However, I was also a sort of curiosity. Kids used to want to hear about Puerto Rico, Montana, and New York City — three places where I lived at ages 6, 5 and 4.

I used to read a lot and at age 8, I began going to the library every afternoon to borrow a book to read lying in the library yard, and taking it in when the library was ready to close or I had to go home to eat. As a result I rather immersed myself in the book, as if I had really experienced what I read. If anyone asked me about anything I had read, I felt right at home and could answer anything.

I did the same with school books because I had developed a great desire to learn. When the time came for exams, I had no trouble because it was like someone asking me what had happened on a trip.

I took a civil service exam for postal clerk during the depression, and although the exam ran from 8:00 a.m. until 5:00 p.m., I was through at 9:30 a.m. The examiner asked if I was sure I was through. I said I had put down all I knew and there was no use trying to put down things I didn't know.

When the grades came out, I tied with another man for top place. By that time I had another job so they gave the appointment to him. There were 300 who took the exam.

When I was working at the City of Dayton Engineering Department, an exam came up for transitman, which meant that I could move up a grade. It also was an 8:00 a.m. to 5:00 p.m. exam.

I took the exam and one of the questions was a "Cut and Fill" question. This meant that you had to draw a cross section of a road and make squares to represent cubic feet of dirt. Then you had to compute the cubic feet of dirt in the high spots and place them in the low spots. This was a laborious job and could take a couple of hours. I noticed that the question was #3c. There were 10 questions so that meant that question #3 was 10%. This meant that #3c was only 3⅓%. I thought — "That's not worth the trouble." So I finished the rest of the exam and left at 9:45 a.m.

When I gave the paper to the examiner, he said, "Are you satisfied? There is plenty of time left." I said I was. "Did you get that Cut and Fill problem?" I replied softly, "Are you kidding — for 3%?" He laughed, and said, "We wondered if anyone would notice that." I was again top grade and got the appointment. When we discussed it next day, the chief of the department said, "It is just as important to know *when* to do something as how to *do* it."

I have since passed difficult radio exams the same way. Most of them now are multiple choices and I never took more than 45 minutes for one. I have been studying psychology for many years, and I combined the two. After several years study I have come up with this method. I am sure that it will help many of my readers, but to be helped, you must accept what I say without blocking its result by not believing in it.

Your mind is divided into two parts — the conscious mind and the subconscious. Everything you know, everything you have ever seen or heard — is in your subconscious. A good hypnotist can bring out any or all of what is in your vast subconscious mind. The question is — how do YOU do it. Very simply, by being your own hypnotist!

It sounds simple, but it is not quite as simple as it sounds. Before it really works, you have to have a way to get at what you want without having to delve through your entire lifetime to find it.

The first requisite is that when you store information, you classify it in a

way that you can find it. The best way to do this is the same way I studied when I went to school. You must *understand* what you are learning. If the teacher or professor goes by anything you don't completely understand, stop him at once, and make him explain it. In the first place it is your right to demand this, but best of all, if you are sincere, you will please the teacher. A good teacher is always pleased when his pupils are interested in what he is teaching. When you understand it, it goes in your mind as a unit, and is much more easily recalled than if you were to memorize a lot of disconnected facts and try to recall them.

Your mind is made up of a lot of nerve cells called neurons. They are all almost connected together. They have little gaps separating them and when a neuron is activated, a little electric charge discharges across the gap. This gap is called a synapse. When the discharge takes place a number of times, the resistance decreases and the gap is jumped more easily. This is "training."

Advertisers use this to train your mind to think of their product. They say that it takes 36 repetitions to fix the path. Did you ever smell something cooking and have a vision come to your mind of a kitchen back in your childhood, or smell a perfume and have it bring back a romantic memory? The same principle applies to the recall of information. When you see a question on your exam paper, you want the answer to come into view.

I was president of a training film company for thirty years, and I used one primary rule of learning. You must accept whatever the teacher or books say without reservation for rapid learning. Pick your authority with care, but once you do that, then never question anything you read, for the present, anyway. This way your mind is very receptive to learning. If you begin to question anything, you skim off the information at your present level of knowledge, and therefore learn nothing. Furthermore, by your negative attitude you slow the learning process. If you accept everything, you will at least know more than you did before, though you may learn a few things which you may later wish to change.

I had to learn in a day or two everything my customer had learned in twenty or thirty years. I did this

by accepting everything he said as if it were being poured into my mind with a funnel. It will amaze you once you try it. If you learn under relaxation, it will further intensify the learning process greatly.

I once had a film writer ask me to teach him everything about film editing in one day, as he had a job interview in Washington the next day. We both worked in the Motion Picture Divison of Wright Field. I was chief of the editing branch. I explained about the theory of funnelling knowledge into the mind and relaxation, and he understood. I spent the day telling him everything I knew about editing. He went to Washington, got the job, and in several months became the Producer of all Training Films for the National Labor Organization.

Some people learn sound better than sight, and I am one of them. If I want to remember a date, I say it aloud, and remember how it sounded.

An excellent way for "Audio" people to learn is to read the information into a tape recorder, and then play it back under relaxation. This also works for the "Visual" people, who remember what they *read*.

In fact, reading what you want to learn into a tape recorder and playing it back under relaxation is about the best way for anyone to learn anything.

At college, many students take a tape recorder to classes they are unable to attend either because of illness or because they have another conflicting class at the same time. They put the recorder on their desk, and leave, and pick it up after class. Another student will turn it on or off for them. Thus they have the entire class discussion for study when they review.

Now for learning directly with your subconscious, by-passing the conscious mind entirely. This is very good for subjects which depend on instantaneous decisions, such as taste in decoration or dress. It is also useful for touch typing, and I will give you a spectacular example.

During World War II, in North Africa, the U.S. Army trained African natives to type telegraph code directly from the headphones to the typewriter. Simple, you say? Except for the fact that none of the natives could speak English or even read it. They were taught that dot dash meant A, and so on, until they could copy at a high rate of speed without having the slightest idea what they were hearing or writing.

As you may have observed, a good telegraph operator can talk to you while he is copying from a telegraph wire at high speed because he is not using his conscious mind at all.

You can learn composition in painting or judging art and the like the same way. To explain with your conscious mind why a composition is good is very difficult to do, and hard to learn. But by looking only at good art your subconscious can learn extremely fast.

My wife and I used to go on automobile trips, and she being very much interested in architecture, would point out houses and tell me what had been changed on the house, and how it should look. These were classic old homes which had been "modernized" by having small paned windows replaced with large glass and having parts removed and added. I had no education in architecture and decided to learn.

How to learn quickly — that was the question. Then I had an idea. I thought of the bank clerk I had once been, and how a teller could pick up a counterfeit bill at a glance from among many good bills. The reason, of course, was that he was accustomed to looking at good bills. I decided to use this principle, but with greatly expanded fields. I got several architectural magazines from the library, and leafed through them. Then I began to look at news stands, and while I was waiting in advertising offices. I often had to call on these offices for work, and they all had magazines with beautiful homes. The following summer, when we went on vacation, my wife mentioned a house we were passing. I quickly glanced and said, "Yes, they have added dormers and changed the entrance." She was surprised, and asked how I knew. I said that I had been studying architecture.

Let's try to bring this into your field. Do you identify cars readily? Or are you familiar with cameras? If you are a connoisseur of high-priced cameras, can't you tell if someone puts a cheap one with them? The reason is that you have unconsciously been mentally photographing what you see and it is retained in your subconscious mind.

Now comes the distinction. When you study day by day, you are studying and reciting with your conscious mind. But your conscious mind can only handle a limited amount of information, so the work is given you in amounts you can handle.

There is no limit to the amount of information your subconscious mind can handle. With a little practice you can learn to use it.

You've been self-hypnotized many times. You have entered hypnosis spontaneously literally hundreds or even thousands of times, depending on your age. We all slip into a trance at times every day of our lives, though such situations are not labeled hypnosis.

Dr. Griffith Williams, of Rutgers University, has written of these spontaneous states in an article in Experimental Hypnosis (New York: MacMillan, LeCron editor). Daydreaming is nothing but a state of hypnosis, perhaps light, sometimes deep. When we concentrate intently on anything, such as reading a book, watching a motion picture or TV program, or even on our work, we tend to slip into a trance. It is even probable, as Estabrooks has pointed out, that we do so whenever we experience a strong emotion, such as fear or anger.

How Hypnosis Feels

A hypnotized person is never unconscious. He knows what is going on all around him. He can even walk or talk while under hypnosis.

Only a light degree of hypnosis is needed for our program. In this stage there is no specific sensation of being hypnotized. All you feel is a listlessness and great relaxation. After you have followed this program for a week or so you can test yourself by telling your finger to feel tingly. If it does, it means that you are hypnotized. If it does not, either you are skeptical or have not kept at it long enough.

Incidentally, you can use this method to help you when you are studying, by letting you concentrate when there are many things going on around you.

If you like, you can record the words you are going to say, in a low monotonous voice, or you can even read them to yourself aloud or silently. It may take a little longer, but it may be easier for you.

How To Hypnotize Yourself

1. Select a place or room in your home where you can be reasonably sure that you will not be distracted by the telephone or other unnecessary noises or interruptions. It will help to draw the blinds or subdue the lights. Soft music often puts some people more quickly into a state of hypnotic relaxation. You may want to experiment by selecting a type of music that is soothing and

conducive to "sleep-like" relaxation.

2. Lie down on a bed or comfortable couch or semi-reclining chair, placing your feet on a hassock or some other firm object serving the same purpose. Loosen all tight clothes.

3. Take three deep breaths. Breathe deeply and slowly.

4. Close your eyes.

5. Say to yourself, as if to another person (your subconscious mind):

"You are going to relax all the muscles of your body ... starting from your head to your feet ... The muscles of your face and neck are relaxing ... The muscles of your shoulders and chest are relaxed ... You're beginning to feel free of all muscle tension ... Your arms feel limp and relaxed ... The muscles of your thighs, legs and feet are relaxed. As you breathe deeply and slowly, your entire body is completely relaxed. You feel calm and relaxed all over."

Rapid Method Of Hypnosis

After you have practiced the prescribed method of relaxing yourself each day for more than a week, and you are satisfied that you are able to relax completely, you are ready to use a more rapid method of autorelaxation.

Say to yourself, "You are going into relaxation at the count of three. One - two - three."

Rapid relaxation can also be achieved in the waking state. You give yourself the count and quickly experience a relaxed feeling throughout your body. Your mind suddenly becomes relaxed and receptive to suggestions. You suggest to yourself that hereafter whenever you use the work "Relax," the relaxation will occur instantly. If you are walking or sitting, you naturally are going to keep your eyes open. You tell yourself that you are completely aware of your surroundings at all times, and that you are in full control of your mind, except that you are in a state of self-induced relaxation as well as a state of increased receptivity to self-given suggestions. Once you have practiced this rapid method of hypnotically induced relaxation, you are ready now to make good use of your subconscious mind by giving it suggestions. Your subconscious mind will do for you what you want it to do. By repeating and repeating a given suggestion to your subconscious mind, you will accomplish your objective.

Twenty percent of the population are extremely easy to hypnotize. These are the ones who enjoyed the play, *Harvey*, with the big "invisible" rabbit.

They could actually see him. They are the people who enjoy eating in restaurants where the menu and signs tell you how wonderful the food is and the fabulous taste of everything you eat. My sister is one of these. She enjoys everything if the signs tell her she will. I am of the 20 percent which are hard to hypnotize. No matter what the menu says, if the food is not up to standard, nothing on the menu can make me enjoy it.

The second 20 percent are relatively easy to hypnotize, but cannot have hallucinations. I believe that these two groups, of 40 percent, are the ones who will benefit most from this folio. They are most likely to be afraid of examinations, and pay too much attention to remarks in class and elsewhere about how hard the exams are.

By all means do not tell anyone you are studying this article. Many of them will ridicule it, either because they don't understand it or because they want to downgrade your ability to make themselves feel good. These negative comments and influences will cancel part of the positive influences I am trying to give you, if you are suggestible, and cause you to fail. You MUST think positive — that you KNOW that you will pass, or this is wasted.

Remember that under hypnosis you could recall everything you had seen or heard all your life? If you were to pass a man on the street and glance at him, a hypnotist could have you recall every detail of his appearance. You could tell what sort of socks and tie he wore, the color of his eyes, and every detail of his dress. The same thing happens when you look at a book, or a newspaper. If you read an item in a newspaper, you are also scanning all the other material on the page. If there is an item about a red-haired man committing a murder, you may find that you have a feeling against red-headed men, and you will never know why.

So, now let's glance at each page of our book which deals with the subject of our examination, deliberately turning the pages slowly and glancing at the whole page. Do not try to read anything on the page, just "microfilm" it with your eyes. This will put the entire subject in close proximity with each part of it, so when you go to recall it, you can quickly scan it for your answer. I use the word scan, but the speed of scanning is faster than any computer.

It is absolutely essential that you believe you are

going to pass the examination. When I go into an examination room, I KNOW I am going to pass. It never even occurs to me that I would fail. I don't always make perfect grades, but I always pass. Any feeling that there is any doubt about it tends to inhibit your recall. If anyone asks if you are worried, just smile and say, "No."

Each night when you go to bed, give yourself the key word, "Relax," and say, "When I wake up I will feel wonderful, and full of energy, and have confidence that I will pass my exam." When you go to take your exam, you will know that you have everything you need to know in your mind, and all you have to do is say, "Relax," and tell your subconscious to give you the answers.

After you have completed giving yourself post-hypnotic suggestion, either in the sleep-like or waking state, you can tell yourself that at the slow count of ten, you will rouse yourself from the self-hypnotic state with a feeling of emotional well-being, inspired by the conviction that you are going to benefit immensely from the application of the particular suggestions you have given yourself.

When you start, take each question, read it carefully, watching for tricky wording. Be sure you know exactly what the question is. Then look at the multiple choices. If you cannot answer a question at once, go on to the next but put a little mark at the left of the question. Don't waste time now. This is one of the big mistakes most people make. They get stuck on something they don't know and don't have enough time at the end to answer the last questions.

Go ahead and answer all the questions you can, and then go back and pick out the ones you could not answer. First, try to eliminate the two impossible answers. That will leave three. Two of them will look like the right answer, probably. Guess on one if you don't know the answer. Do NOT leave any question with NO answer. All examinations are designed to allow for guessing. If you were to guess at all 100 questions, you would likely get a grade of 20%. If you can eliminate the two impossible answers and guess out of the three left, you will get one of three right.

Usually 70% is passing. This means that you can have 30 questions out of a hundred that you can miss. If you guess wisely, you can probably guess ten of the thirty right. This would give you 80%.

All of this assumes that

you make a serious effort to study the subject thoroughly. It would take first class hypnosis for you to glance through a strange book and pass an exam, but with the right training, you could probably do it.

For Radio License Exams

Now for the code part of the exam. The same rules apply here. You must go in with the conviction that you will pass. You will have five minutes to copy. Do not copy anything for at least a minute, perhaps two. Get the feel of what they are sending. Just get used to the sound and the speed. Remember, you only need one minute of solid copy. Pick a pause and start in. Copy the best you can for about a minute and a half. Then stop and look back over your copy. You may find you have made an "e" look like an "i." Correct it. Just try to fix any uncertain letters that may make the examiner wonder what you meant. Tell your subconscious to time you.

Before you go to take the exam, try timing yourself by relaxing and see how close you come. I can come to within a few seconds this way. Practice a little. Starting to copy when the code starts coming is very unsettling. You are surprised by the echo in the room, or the charcter of the sending, and at the same time trying to put down what you are reading.

Use the hypnosis instructions when you are learning the code. A well known hypnotist found that it was possible to distort time to the extent that you could practice listening on the violin in ten seconds what should take ten minutes to study. This would mean that you could, under hypnosis, copy five words a second instead of five words a minute, and this would mean reading 300 words per minute instead of five. Think about that for a while. ■

Bob Margolin W2SDU
P.O. Box 36
Belle Mead NJ 08502

County Hunting

Remember how you counted the days waiting for your ticket to finally arrive? Recall the first time you fired up your rig... your first QSO...your first real DX...those elusive last states and countries you needed for the WAS and DXCC you wanted so badly? When you think about it, if you're like most of us, you constantly set goals for yourself. Maybe it's making the DX Honor Roll or the BPL Medallion or coming in first in the Sweepstakes or just being the best operator you can. Whatever the goal, whether you achieve it or not, it eventually loses its importance. Normally you just set a new goal. But, sometimes there just doesn't seem to be anything worth getting excited about; hamming isn't any fun anymore. Well, if you're looking for a real challenge, something that will provide lots of competition, require good operating skills and endurance, yet provide numerous rewards and lots of fun, you've found it! It's called county hunting.

County hunting is kind of like working all states 61 or 62 times over, or if you prefer, like making the DX Honor Roll ten times. All you have to do is work a station in each and every one of the 3076 counties evenly distributed throughout the United States. Sound interesting? It's quite a challenge. Only about 120 hams have managed to do it. But don't let that discourage you because that exclusive group includes a ZL1 and a G4. And if they could do it with the propagation we've been having, anybody can do it.

Of course, achieving a goal isn't much fun if you don't have something tangible to show for your efforts. Fortunately, there are two rather attractive awards being offered by well known organizations to those who manage the feat. Both award programs begin with an initial requirement of several hundred counties, for which you receive large certificates you'll be proud to display in your shack. As you add more counties to your total, you receive special seals to be applied to your certificates. Finally, when you finish them all, you receive beautiful wall plaques.

While the two award programs differ in some important details, both permit you to claim every contact you ever made, or ever will make regardless of your call or QTH at the time. The only requirement is, of course, some proof that the contact was made. But more about the nitty-gritty later. If you're like most hams, you've got a shoebox full of old QSL cards and old log books buried in a closet somewhere. If you do, you're off to a good start. But whether you want to use those old contacts or start from scratch, you're

going to need a reliable means of determining in just what county each station you work resides. Of course, if he tells you or has it printed on his QSL card, there's no problem. This isn't the usual situation though. That's why sooner or later you'll want to get your hands on the "Directory of Post Offices", available from the Government Printing Office under the stock number 3900-00242 for $4.25. This marvelous publication lists every Post Office in the U.S. as well as the county in which it is located.

The Rewards

Once you've got yourself squared away, you'll want to decide which of the two available awards you want to go after. There is, of course, nothing to prevent you from going after both of them simultaneously — as long as you keep the different requirements for each in mind. The better known of the two is the United States of America Counties Award (USA-CA) sponsored by CQ *Magazine*. This certificate is printed in four colors on white parchment-like stock measuring 14 inches wide by 22½ inches high. The design features full-color illustrations of all 50 state flags. You can get it by submitting proof of having had two-way contacts with amateur stations in 500 counties. If you qualify and so desire, you can have your certificate endorsed for all one band, all one mode, and/or all mobile contacts. There is no minimum signal report required. You must, however, have QSL cards in your possession for each county claimed. But you don't have to submit them with your application. Certification by two General or higher class hams is sufficient. If by chance you contacted a mobile station that just happened to be parked on a county line, you may claim all the counties in which a piece of the mobile resided. It's sort of like getting two or more for the price of one, but the mobile operator must indicate clearly on the QSL which counties may be claimed.

To apply for this award, you must use a special record book available for $1.00 from the sponsor. Complete rules and procedures for the awards are contained in this record book. After the initial 500 counties have been worked, you can submit additional 500 county lists for the higher class seals. These higher class applications can be made using the record books, but a self-prepared list is acceptable.

The other award is the United States County

Hunter's Award (USCHA) sponsored by the Certificate Hunter's Club. This certificate is printed in black on an off-white parchment-like stock measuring 22½ inches wide by 17½'' high. The design features an outline map of the U.S. with each county defined and labeled. It is intended that as the county hunter moves from class to class in his quest for the magic 3076, he will color in each new group of counties in a different color. The end effect is a mosaic-like color map of the U.S. You can get it by submitting proof of having had two-way contacts with amateur stations in 300 counties. However, U.S. hams must include at least one county from each of the 50 states. In other words, you've got to work all states before you can get started on this one. DX stations, though, get a break. They need only include counties from 30 states. Any contact may be claimed, but at least a 3x3 report each way is required. You don't need QSL cards, but your log must contain all the required data, and two General or higher class hams must certify it's all there. If by chance you should work a mobile station that just happens to be parked on a county line, you must choose which of the counties you want to claim. If you need all the counties involved, you must establish separate contacts for each of them. Sure it's crazy, but that's the rule.

To apply for this award, you must use a special record form set available at 3/$1.00 from Cliff Evans K6BX. Complete rules and procedures are included in the form. After the initial 300 counties have been worked, you can submit additional 300 county groups for higher class seals, but you must use the special form set for each application.

Once you've decided which of the two awards you want, or decide to go after both of them, you're ready to go. You'll very quickly discover, however, why only 120 or so hams managed it. For one thing, there are quite a few counties in this country that contain no active hams. Even when there are a few active hams in a county, it may still be out of your reach because those hams operate on bands or use modes you don't. But, if you're fairly active, take advantage of state QSO parties and similar activities, check into state and regional traffic nets, and participate in the Field Day contest, you stand a very good chance of nailing down a couple thousand counties in two or three years. After that, they'll come very, very slowly. Under normal circumstances, it should take you around ten years to finish

up. Why? Just think what the odds must be against your randomly tuning around one day and finding a mobile calling CQ from the one county in Montana or Wyoming or wherever you need.

The Nets — Or How To Cut It Down To Just Four or Five Years!

Obviously there has to be a better way — and that way is the county hunters' net. Actually there are several nets operating in the CW and SSB segments of 20, 40 and 80. The best known and most popular of the nets is the 20 meter Independent County Hunters' Net (ICHN) operating daily at 14.337 MHz. It normally starts up between 14:00 and 15:00 UTC and continues in operation until the band folds. During the summer months a 40 meter ICHN operates at 7.237 MHz. This net starts up around 01:00 UTC and continues in operation until the last county hunter pulls the switch. Both of these nets are truly independent, having no affiliation with any organization and following no formal operating procedures. Though both will accept emergency traffic and render what assistance they can, they exist primarily to get county hunters together with mobile stations.

Another net that plays an important role in county hunting is the CHC-FHC Service Net that meets daily on 3.943 MHz. It usually starts up around 8:00 pm local time and runs past midnight. Depending on the season of the year and propagation conditions, the net is restricted to an area of only a few hundred miles diameter, or may operate coast-to-coast. This net, as the name implies, is a function of the Certificate Hunter's Club. Although it will accept emergency and time-controlled traffic, its prime function is to aid amateurs in their quest for the thousands and thousands of certificates and awards available to the ham community. CHC membership is not required; everyone is welcome to check in. However, since only a small portion of the available awards are county oriented, you hear a lot of non-county hunting activity. Nevertheless, at one time or another, just about everyone of the 3076 counties have run on the CHC-FHC net.

It will take you a while to get used to the rather haphazard operations of these nets. Generally, the process begins with a county hunter picking up net control and getting a couple of others to act as relay stations. After getting things going, the net control will put out a "QRZ mobiles" call. Those mobiles on frequency wanting to give out contacts from their coun-

ties then identify themselves and standby. Normally the mobiles are run in the order they are acknowledged by net control, but sometimes the order is adjusted to allow for differing in-county times.

The run itself begins when the net control announces the mobile's callsign and county, has it repeated by the relay stations, and gives the mobile a starting time in UTC. The mobile then puts out a "QRZ such-and-such county, such-and-such state". That's when all hell breaks loose! Unlike the more sophisticated nets, the county hunters' nets have no calling order — it's every ham for himself, just like a DX pile up. I wonder how many hams have stumbled across these pile ups only to go away mumbling to themselves when they discovered the fuss was over a W6 somewhere in California. Adding to the fun is the usual 20-over splatter and an assortment of carriers as well as a group of lids whose total ham activity seems to be tuning up and saying "hello test" on net frequencies. No one knows why, but it is a fact that more of these mental midgets prefer to do their things on the county hunters' nets than on any other. Even with the QRM, the mobile operators do an exceptionally fine job of making contacts. When propagation makes contacts difficult, other stations on the net will help you by relaying the mobile's call, county, state and any other needed information. But, you've got to get your signal reports across without help from anyone. If you can't exchange the reports by yourself, you've got no contact. However, since signal strength can vary from minute to minute, you'll get a second chance at the end of the run if time permits.

QSL Cards — How To Get Them

Getting confirmations is a problem that plagues all aspects of ham radio. Of course, depending on which award you want, you may not need confirmations. But, if you do want them, you're going to have to go get them. You can't just sit back and wait for them to magically appear in your mailbox.

One method that works fairly well with fixed stations is to include with your own QSL a self-addressed, stamped envelope (SASE). Of course, you're still depending on the other station having QSL cards, and being willing to take the time to look up your contact in his logbook. A better method, and the only one to use

with mobile stations, is to prepare a QSL *from the other station to yourself*. Since your purpose is to get confirmations, not pretty multi-color cards to decorate your shack, you can use a simple 3x5 index card. All you have to do is list all the required data: the other station's callsign, date and time of QSO, frequency and mode, signal report (the one he gave you), the county(s) and state(s) he was in, and clearly indicate where he is to sign if he agrees with your data. If you prefer, you can use commercially printed reply cards available from WA2AMM, K7LTV, K9EMV and others. Put your name, address and return postage on the other side and you're in business.

The Bureaus

Considering that you must pay letter postage to the other station and postcard postage back to yourself, it's going to cost quite a bit. You can cut the cost down by waiting until you've worked a station numerous times and then putting all the data on a single card. The most economical way to do it, though, is to use one of the two county hunters' QSL bureaus. The best known of these is the Mobile QSL Bureau operated by Dave Manescu W6CCM. This is the bureau the regulars refer to in such phrases as "via the bureau", and "via Charlie Charlie Mike". The bureau will forward your reply cards to the appropriate stations and then return the signed cards to you for just 6 cents each, or 20 for $1.00. Another benefit you derive from using the bureau is the certainty that it has on file the latest QTH of the stations you've worked. Many mobilers provide the bureau with QTH information about portable and extended mobile operations to which you would otherwise have no access. Since it is expected that you will want to send the mobiler your own QSL after the first contact, the bureau will forward these "initial contact" cards free of charge when they accompany your reply cards. With over 500 active county hunter members, the bureau can get you a confirmation for better than 95% of your contacts. Generally speaking, if the bureau can't get you a confirmation, forget it! You can get more information about its operation by sending an SASE to P.O. Box 146, Lakeside CA 92040.

Bob Schmarder WA2AEA operates the other county hunters' QSL bureau, the QSL Clearing House. Its operation is very similar to the

W6CCM bureau, but it offers some additional services. Whereas the W6CCM bureau will accept cards only for contacts made on the 20 and 40 meter ICHN and the 75 meter CHC-FHC nets, the Clearing House will also accept off-net cards, though at a higher price. However, since it has fewer members involved in county hunting, turnaround time is a little longer. For information about this bureau, send an SASE to 4 Pinewood Circle, Corning NY 14830.

MARAC

Although originally founded to provide a meeting place for active mobile operators, the Mobile Amateur Radio Awards Club has evolved into *the* county hunters' organization. Among its activities is the publication of a monthly newsletter which has become the bible of county hunting. You'll find in each edition lists of counties needed by members to finish particular states, planned mobile trip itineraries, notices about county hunter get togethers throughout the country and other information of interest.

Another MARAC activity is the sponsorship of an awards program built around mobile operation, but available to the fixed-station operator as well. The most popular of these awards is the MARAC Last County Award. This award is available to any station, fixed or mobile, that provides another station with its last county in a state. Seals are available for additional last county contacts with other stations. A special plaque is awarded to the station providing the 3076th county to another station. If you qualify, you can apply for these awards yourself. However, as a matter of practice, many stations will apply for the award in your name when you give them their last county in your state. Other awards are available for working a mobile station in each of the 50 states, for working each of the 50 states mobile-to-mobile, for working YLs in various numbers of counties, and for giving out contacts from various numbers of counties and states.

If you decide you want to get into county hunting, membership in MARAC is a wise investment. You can get complete information about MARAC membership, its awards program, suggested operating procedures for use on the nets, sample reply cards and other county hunting information by sending a self addressed large business size (#10) envelope with first class postage for 3 ounces to Bertha Eggert WA4BMC, P.O. Box 6811, Southboro Station, West Palm Beach FL 33405.

CW?

Everything discussed so far relates primarily to phone operation. But if you prefer CW to phone, there's another organization that will interest you: the CW County Hunters' Net (CHN). The CHN operates a net on 3.594 MHz every Monday at 24:00 Z, on 7.055 MHz every Wednesday at 23:00 Z and Sunday at 14:30 Z, and on 14.070 MHz every Saturday at 14:00 and at 20:00 Z. Don't be too surprised if you can't find any activity at these precise times and frequencies. Just look around a little for the "QRZ CHN" call.

While your chances of finding a mobile station calling CQ in the phone bands are pretty good, the same can't be said for the CW bands. Fortunately, many of the CW county hunters are also mobilers and run frequent trips for the net. Since these trips are not necessarily run during scheduled net sessions, you'll want to subscribe to the monthly CHN newsletter. In addition to general county hunting information, the newsletter gives advance notice and itineraries for those special mobile trips. You can get a one-year subscription, and membership in the CHN, by sending $2.00 to Jim Hoffman K1ZFQ, 42 Gresham Street, Milford CT 06462.

The CHN also sponsors a county hunters' award program of interest to both CW and phone operators. The United States of America Counties Award by Call Areas is essentially a step-by-step all counties program. You can get an attractive certificate each time you complete working all the counties in a particular call area. KH6 and KL7 are considered separate call areas for this award. When you've got all twelve awards, you'll get a trophy for your efforts. Other awards include working a mobile station in each county of a particular state, working the same mobile in each county of a particular state, and for giving out as a mobile operator contacts from every county of a particular state. You can get more information about the CHN awards program by sending an SASE to George Levensalor W1DPJ, 399 Buck Street, Bangor ME 04401.

If you want QSLs for your CHN contacts, you can take advantage of the CHN QSL Bureau operated by K1ZFQ. The use of self-prepared reply cards is standard operating procedure on the CW nets too. In exchange for some of your self-addressed stamped envelopes, the bureau will handle all of your initial contact and reply cards for contacts made on the CHN, whether regularly

scheduled net sessions or special mobile trips.

Other Programs

In addition to the awards already mentioned, there are literally thousands of other awards available that you will qualify for in the course of hunting counties. These range from the so-so CHC program to some very high quality awards sponsored by local, state and regional radio clubs and civic organizations. For example, there are awards for working all the counties of a specific state, for working so many stations in a given county, for working counties of the same name in different states, for working so many stations in a given city or in a given radio club, and so on. Although about half of the awards listed are CHC sponsored, there are many worthwhile awards sponsored by independent organizations listed in the CHC's *Directory of Certificates and Awards*, available from K6BX.

If you ask most active county hunters what they most enjoy about it, they will probably tell you it's the many friendships they've made. Eyeball QSOs are commonplace as mobile operators roam the countryside. County hunters living within reasonable distances often visit each other. The annual MARAC National Convention held in July provides an opportunity for hundreds of county hunters to get together for both socializing and problem solving. Frequent "mini" conventions sponsored by local county hunters throughout the country provide a meeting place for those not able to make it to the national convention.

Throughout this discussion I've used the masculine pronoun "he". Don't get the idea, however, that you have to be a male to participate in county hunting. The fact is that you don't even have to be a ham, much less a male ham, to take an active part in county hunting. Both the USA-CA and the US-CHA programs are open to SWLs on a heard basis. Many other awards are also available to the SWL. As far as YLs are concerned, there is probably a higher percentage of YL participation in county hunting than in most other ham activities. Many of the YL county hunters are also active mobilers.

In short, there is something in county hunting for just about everyone. Why not check into the nets and see what it's all about? I think you'll find it both interesting and challenging, and if you're like us, you'll soon be hooked too. ■

99¢ IC BFO

by
Richard L. Price WB5MJT
1506 Morgan Blvd. #106
Harlingen TX 78550

Recently I was approached at the FM station where I work by one of the announcers who wanted to know what the funny voices and pulses he heard on his all-band radio were. After I tried to explain in simple terms that it was CW and SSB and why they sounded that way, he gave a blank look and asked if I could fix his radio so he could understand what they were saying.

Later, after going over a multitude of circuits, all requiring transformers, trimmers, pots, and a good deal more effort than I thought the project deserved, I was reminded of a similar situation involving a 12 year old cousin who wanted an AM wireless mike. The wireless mike used a National LM703 rf i-f amplifier in a simple oscillator circuit. A quick check to a reactance chart and replacement of the original speaker/mike with R2 gave the circuit shown here: a 455 kHz BFO using only a handful of common junk box parts, requiring only about 30 minutes to build.

At the time of this writing the LM703 only cost 99¢ for single units at Radio Shack for tested ICs. The 703 is good to at least 150 MHz and is rated at 200 mW dissipation. With a few minor changes in the tank and elsewhere, this basic circuit can be used as a QRP phone or CW rig, signal source, BFO at frequencies other than 455 kHz, or in other circuits as a LO, etc.

Maybe this will prompt some of us to do some experimenting with the 703 for preamps and such but just as important, I hope the circuit will help some beginners and Novices get their feet wet in building and using home brew gear in their station. ■

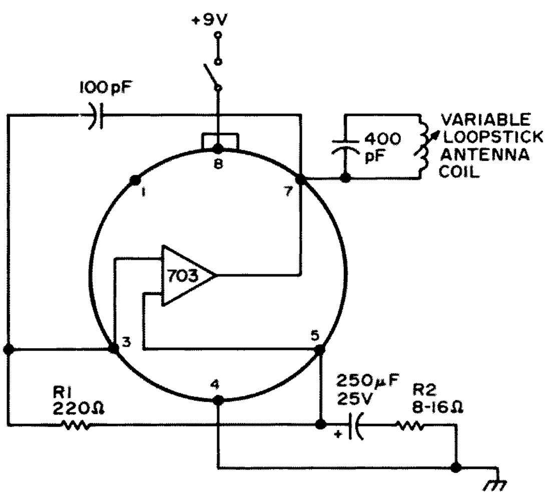

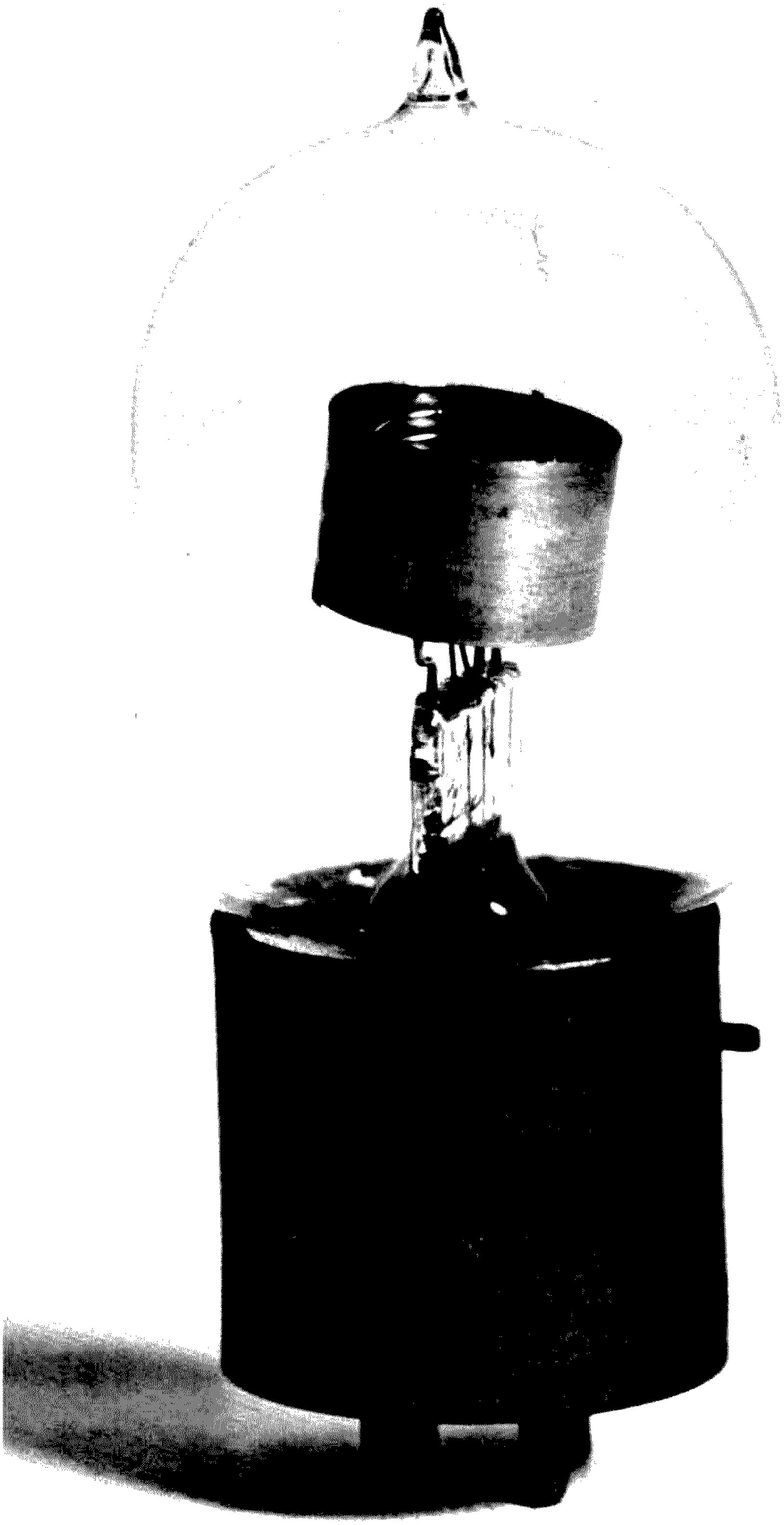

by
J. K. Bach
Ivy Hill Road
Walden NY 12586

Empty State

We call transistors and such solid state now, because they are dense. Small, but solid. They have an almost mythical twin, an empty state device, which is larger in outline – much larger – but so unsubstantial that the working elements if turned edge to, would disappear. By actual rather than apparent volume, or weight, these are negligible, and the container is 99% empty. This *doppelganger* of the solid state device is called a valve, or tube.

Two generations ago, there was practically no solid state device in use and the valve was called upon, singly or in rows, to do any electronic job that had to be done. When solid state became popular, we tried to apply what we knew about valves to them. We were slapped on the wrist by the authorities, who, to a man, pontificated that there was no relationship whatever.

This was obviously an exaggeration, but this fact was apparent only to the uneducated. For the valve certainly had an emitter, a base, and a collector, though they were called by different names.

Solid state elements, such as the transistor, emit electrons – or holes – at ambient temperatures. This requires no heating power at all, but when the ambient temperature falls to zero or below, the transistor stops working. The valve keeps right on working, because the temperature of the emitter is raised to 1,000 degrees Centigrade, or higher. This can be done by a flashlight battery if the emitter is in the form of a filament about one thousandth of an inch thick. Larger elements require more power, of course.

In general, it has escaped notice that the empty state devices can be wired in all the ways that solid state devices can. For instance, for highest gain, there is the grounded emitter. Grounded base gives stability and negative feedback, just as with solid state, and is particularly popular for linear amplifiers. Even grounded collector is used, as with a large device which has a high collector capacity, and so is grounded to permit very high frequency operation. This is encountered only with large water-cooled valves. Valves are also connected in the Darlington mode, but this is more troublesome than with transistors, because of the heater supply. Oh, I almost forgot – grounded collector modes are used with small valves after all, when a low impedance output is desired, as with feeding a long audio transmission line. In this application the valve circuits are called "cathode followers." Isn't this a quaint name?

Input is connected to the base, and output from the cathode. The drop is from the emitter (cathode) through the load resistance to ground. It is called a "cathode follower" because the cathode signal voltage goes up and down along in phase with the grid voltage, and a very little bit less. But while the grid current is extremely low, the cathode current and the signal available is substantial, and the distortion negligible, because of the 100% voltage inverse feedback.

There was a time when hi-fi addicts hated output transformers, claiming that they always changed the signals into something else, not even recognizable. They wanted "OTL," or "Output-Transformer-Less cir-

In general, it has escaped notice that the empty state devices can be wired in all the ways that solid state devices can . . .

cuits," and a number of workers zeroed in on this one.

Think of the cathode follower as a boy in a box. A black box, of course. You feed in power at one end, and get regulated power out the other end. Or you get a substantial signal out, even though the output impedance is low. What you don't know is that the output variations would be wild, except that the boy has a big rheostat in there. When you screw up the output, he unscrews it with his big rheostat, and you don't see the change you would otherwise see. But this holds only over a certain range. When the kid runs out of rheostat range, the output is suddenly as bad as it would have been all along without the kid and his rheostat.

Several amplifiers were built using cathode follower principles. One used four – count them, four UV 211 50 Watt bottles, with a transmitting power supply. It figured an Ampere at 1200 volts, or some such. The amplifier actually did work, and sounded good, but the designer admitted that the thing was highly impractical.

The valve can be operated in any of the classes that transistors or FETs can: A, B, C, D or in between. But while a transistor normally operates class B and has to be forward biased for A operation, the valve needs a negative bias for class A.

All together, a valve base circuit is essentially high impedance, like an FET and most unlike a transistor. The output is lower, usually very much lower, like the FET again, and most unlike the transistor, whose collector impedance is higher than its base impedance. Circuitwise, this is the most important difference between solid state and empty state devices.

Think of the cathode follower as a boy in a box . . .

The empty state device was invented by Lee deForest in 1906. He called it an audion. He wasn't sure how it worked, and neither was anyone else in those days. The electron had been discovered and weighed, but had no more impact on industry than the theories of A. Einstein. Valves were called thermionic up until the middle thirties, just as if ions had anything to do with their operation. Then, suddenly, they were electron tubes.

The AT&T Co. was building a transcontinental line in those days. By using the loading coils of Michael Pupin, and wires as big as your thumb, they had gotten a line that would talk from New York as far as Denver, but no further. A repeater, or two-way amplifier was needed. The directions were separated by means of bridge circuits (called hybrids) and there was the Brown amplifier, which was a head receiver coupled to a carbon transmitter, essentially. This actually worked, but with high distortion and low gain.

Mr. deForest's bulb looked like the answer. AT&T bought rights from the inventor, and Western's tube department – newly organized – improved it. They mounted the bulb on a four-prong, bayonet base to go in a shell-type socket. They retained deForest's double wing pattern, with a grid and a plate on each side of a V filament. The V was supported at the top, and sometimes there were two Vs, or an M filament, called a W.

The filament was made of platinum, coated with oxides of barium and strontium, of which the former was more active. Recently, this kind of coating has been called an N-type semiconductor, since it emits electrons. Tungsten and thoriated filaments also emit, but there is nothing semi about their conduction, so the concept doesn't help much. The coating is, however, up to a hundred times more emissive than the others. It was invented by Wehnelt, in Germany, about 1902 or 1903, before the audion itself.

Now AT&T could extend their transcontinental line to the coast.

The repeater tubes looked very much like the WW I "VT-2" and were made and used up until the middle thirties. They were rated at 50,000 hours life.

The device in the photo is a Moorhead Soft Detector, meaning that it contained a trace of gas. It dates back before 1920, and in those days it was still thought that a sensitive detector required the ionizing feature. The theory was that you critically adjusted collector voltage, emitter temperature and base leak so that the device was barely beginning to ionize. Then a signal would come along and push it over the edge, and the collector, or "space" current would increase sharply. The VT-1, the receiving valve in WW I, was also soft, for the same reason, but was used at low voltages as an audio amplifier as well.

The Moorheads included two other types: an amplifier and an oscillator, or transmitting tube. The last was called "The Golden Tube," which could be due to the gettering employed. It is my belief that these tubes, together with the UV 200, 201 and 202, had a smear of phosphorous pentoxide brushed on the plate. Over a long period of time, this would be evaporated and a molecular layer of phosphorus, or its compound, would be uniformly distributed over the glass. This gave it a beautiful golden color. I have a UV 202 and a UV 201 which both show this. The phosphorus was used as a "getter" to improve the vacuum and keep it high, and I must say I never saw or heard of a soft 202. After the UV 201-A appeared, early in the twenties, only metallic getters

High school physics students used to use test tubes with rubber stoppers, or even milk bottles (glass), evacuate them with the school pump, and burn them for a few hours. Those sealed with sealing wax didn't last long . . .

were used. Perhaps the phosphorus was too hazardous.

The Moorhead illustrated has some very odd features. For instance, the grid is a close-wound helix, free-standing, with the top end unsupported. This might make the tube outstandingly microphonic, or perhaps the length keeps the resonant frequency too low to bother. I'll have to try it and see. The emitter is tungsten (Wolfram) and is a simple hairpin loop, deForest fashion. The collector is supported at each side, and in this tube is tilted.

The tilt puzzles me. The other two Moorhead types never have a crooked collector – they are ramrod straight. Mine, and all the others I have seen pictured, have this rakish tilt to them, like a JG's hat. Maybe Moorhead was careless with these, but I don't believe it.

Back in those "spark" days, detector sensitivity was *the* classic problem. After all the critical adjustments of voltages, what else could you do? You could mount a permanent bar magnet near the tube. If you found the right tilt, and the right spot, and the right polarity, and the right distance, you could up your sensitivity to a marked extent. For trial, of course, you took the magnet in hand, but to use it you had to provide a bracket. It is hard to remember so far back, but it seemed that the magnet was always aimed downward a little.

So it is possible – and I don't insist on this explanation – that the collector was tilted so that the magnet could be clamped level, which would eliminate the necessary tilt adjustment.

When broadcasting started, in 1921 or so, there were all kinds of tubes employed, including military types. Soon, however, there was a civilian market. The UV 200 and 201 gave way to the first super tube, the UV 201-A. This cost $9.00 when that was a day's pay. But it took only a quarter of the emitter power that the UV 201 did, but more and better, you could hear a marked difference in the signals.

In 1926, the ac tube was introduced. This activated the emitter surface with a separate heater, which could be heated by household ac with no trace of hum, thereby eliminating storage batteries with their damaging acid. The "no trace" was a purely theoretical concept – they did hum, slightly or a great deal, depending on circuit design.

Then the multi-base and high output devices proliferated, and the empty space age came into full flower.

Before WW II, the velocity-modulated valves appeared. One was the magnetron, used in radar and in cooking, and the other was the klystron. Both were essentially VHF devices.

Radar demonstrated that valve detectors were not so hot at UHF, and the old cat-whisker crystal detectors were studied. With zone-melting and doping of germanium and silicon, it was possible to build solid state devices on a production basis with uniform characteristics for the first time, and the solid state age had its beginnings. The first radar detectors used point contact devices, but even these had to be doped. By "forming" currents, a tiny fraction of the wire contact was diffused into the semiconductor, making a tiny local PN junction. The old-fashioned natural crystals already had their doping – of a random nature, which is why you had to hunt for "sensitive" spots.

The next development was the point-contact transistor, but this chapter is well-known. In England there was a vogue of making your own transistor from the wafer in a diode. The stubs of heater wires from a broken tube were used, with a stem as a mount, the whole thing formed, and presto! One had his own homemade transistor.

The experimenters used to make their own tubes, too. A number of workers used to burn out one filament of a double-filament headlight bulb, thus securing a plate or collector element. The filament was used in normal fashion as an emitter. This made a diode. A coating of tinfoil on the bulb made a base element with a *mu* of one tenth or one hundredth or some such. But considering the high impedance of the input, it was still possible to get some gain out of the device. High school physics students used to use test tubes with rubber stoppers, or even milk bottles (glass), evacuate them with the school pump, and burn them for a few hours. Those sealed with sealing wax didn't last long, but some workers went far beyond this. One ham actually made split-plate magnetrons of hard glass just before WW II. He said it was easy, but no one else duplicated his valves, so far as I know.

The original magnetron had one cylindrical plate. The next had a split plate, split into two troughs along their axis. This was in the early forties. The British invented the cavity magnetron, like an internal gear, with each cavity of such size as to be resonant at the operating frequency. Next, they were kept in phase by two wires that ran to alternate lips. This was a transmission line, and it kept the cavities oscillating in phase for more output power.

Magnetrons were capable of large outputs, but they were noisy. Small klystrons with tunable cavities were used as local oscillators for VHF superhets. Then came the tropo-scatter systems, with their 110 dB transmission paths – if you could call that

much loss a "path"! The land terminals used klystrons so big they didn't look like tubes at all; they were about seven or eight feet long, heavy, and filled with machinery for tuning. In tubes of that size, cathode emission is a problem, especially peak emission. You can't get it with just heat, direct or indirect. So an auxiliary cathode – filament – was set up and biased several hundred volts negative with respect to the main cathode. The auxiliary bombarded the main cathode and guaranteed enough peak emission. I know very little about it, really – a good look and ten minutes of talk was all I got. But I do know something else: This system was invented by A. McL. Nicolson, who also invented the indirectly-heated cathode. All commercial tubes are licensed under his patents. The bombardment-emission patent number is different, though: # 1,210,678. I don't know when it was filed – as early as 1915 or as late as 1919, or any time in between. The tropo system and the Texas towers date back to 1950 or so, some 30 years later.

During WW II Sylvania developed a tube which could be fired out of a cannon and survive . . .

There were various developments in these empty devices such as the lighthouse, or disc-seal tubes. They were so-called because of a kind of tiered construction that resembled a lighthouse. They were used at UHF and in radar systems. The highest development of the lighthouse tube is in the 416-B and -C triodes used in the TD-2 microwave system. They don't look much like lighthouse tubes, but that is what they are, essentially.

These old devices may be moribund, but they're taking a long time to die . . .

There are also the tiny nuvistor tubes of RCA, designed to compete with transistors. They can't, really, but they do have a high gain and good output for their size, and come in many types. They are all metal with a ceramic base which is also the mount. They are tiny enough to hide in your ear, should you want to.

For a long time, the tiniest tubes were the battery-operated hearing-aid types. They got smaller and smaller, and finally wound up as a flattened tetrode (glass) with wire leads instead of a base, tiny, and with a half volt filament. The idea was to burn three tubes in series from a dry cell. The filament drain was something like 20-30 mA.

During WW II Sylvania developed a tube which could be fired out of a cannon and survive. It came in two types – an oscillator tube, and a thyratron. Both were hearing-aid sized, but they used indirectly-heated cathodes. The oscillator was a Doppler radar oscillator/detector with a range of only a few yards. At its nearest approach to a target, just when it began to pull away from it, it would fire the thyratron (gas tube) which controlled a lot of current and could directly fire the fuse that exploded the bursting charge in the shell. This was one of the hottest developments in WW II and was known as the proximity fuse. The secret was a simple one – the tubes were mounted coaxially so that there were minimum stresses due to rotation of the shell, and the elements were so wispy-light that they didn't absorb much energy from the shock of firing. Other tubes were initially used in the prototypes, and the special proximity tubes were refinements of them.

The latest development is the traveling wave tube, used in the latest microwave systems. This one is a real darb. There is a spiral of tungsten (Wolfram) wire about the size and length of a screen-door spring. A signal starts at one end and is amplified in distributive fashion as it goes along, coming out the far end with considerable zap to it. I'm wrong: Make the inner diameter of the spiral more like a soda straw. An electron gun at the input end shoots a beam of electrons down the center of this spiral to a target at the far end. I don't know what the target voltage is – 1000 volts or more, I think. What keeps the beam from spreading? A strong magnetic field squeezes it into a narrow, tight beam. Now, signals in a wire transmission line travel slower than the same signals in free space, or near the velocity of light. So far as I know, the best you can do with an accelerated electron beam is about half that velocity. So the TW tube effectively slows the wave to considerably less than the electron beam velocity by making it follow a spiral, while the beam goes straight. And the fields of the traveling electrons, in sweeping the wave along faster than it would otherwise go, add power to it continuously from one end of the tube to the other. If the signal had to drag the electron beam along, it would *lose* power. Result: a very broad band, comparatively high-power amplifier that works in the higher GHz.

The tube itself is about 18 inches long, about an inch thick, with a swollen end where the gun is. No base, flexible leads. It looks like a fever thermometer for elephants.

I do not guarantee the accuracy of the sketchy explanation of the TW tube. I don't understand it myself, so that is the best I can come up with. But improving on it is not a project, it's a career.

The burden of my thesis is clear enough. These old devices may be moribund, but they're taking a long time to die. This vitality is due to their suitability for certain special jobs, and should keep them with us for those applications for many years to come. ■

The "Little Log" for 40 to 20m

by
Gordon Stewart VE4GS
26 Dominion Bay
Thompson, Manitoba
Canada R8N IL3

This log-periodic type of antenna will likely be of interest to SWLs who have a couple of dipoles or random wires tied to their receivers. Although designed for 7 to 15 MHz as an experiment in compact log-antenna performance, it is usable for receiving from 6 to 16 MHz.

Using it for transmitting on 7 and 14 MHz it showed about 2.5:1 swr. The swr throughout the range varies more than one would like for transmitting use, but seems to cause no problem when receiving. I would describe the general receiving performance as a very good dipole on all frequencies in the range or a slightly degraded 2 element beam. The front to back ratio seems to vary from unity to about 12 dB, depending on the angle of the signal off the back. Fading seems to be less than when a dipole is used.

The poles used to support the antenna should be at least 30 feet high – 60 feet would be even better.

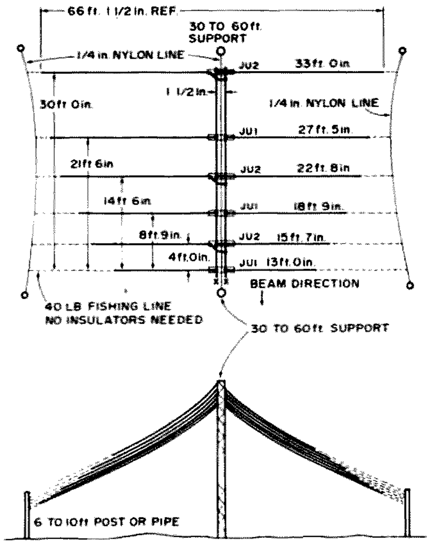

Figure 1.

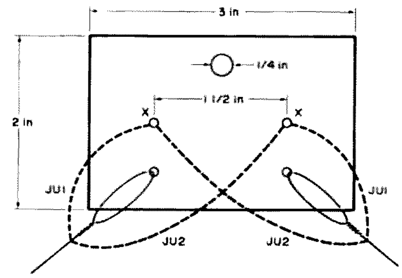

Figure 2: ¼" plexiglass (6 req'd., 1 at each center element).

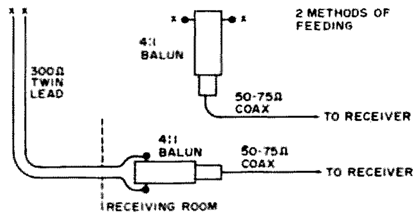

Figure 3: Two methods of feeding. Clean and solder all joints properly!

Be sure to transpose the element feeds as shown in Fig. 1.

The antenna can be fed through a 4:1 balun at the front element and coax run to the receiver. If a 300 Ohms line is available it could be run to the receiving room and then put into a 4:1 balun, with a length of coax used to the receiver. Because of the difficulty in making an all band antenna tuner, I suggest you use the balun, either ready made or from a kit which is available at a reasonable price.

This log, for casual use, represents the smallest size that is practical for the frequency range given – using performance versus size as the trade-off point. Wire size is not critical: #14 or #16 should be satisfactory.

Good listening! ■

Fading seems to be less than when a dipole is used . . .

Using A Bargain Surplus Keyboard

by
Cole Ellsworth W6OXP
10461 Dewey Dr.
Garden Grove CA 92640

I recently became the owner of an ASCII (American Standard Code for Information Interchange) encoded four-row keyboard purchased from a local parts emporium. Of relatively recent surplus vintage, it had originally been used in a computer terminal. The keyboard electronics consisted principally of a 40-pin LSI encoder chip similar to the General Instrument Corporation AY-5-2376. Several 7400 series chips composed the remainder of the circuit. Parallel format outputs included the 7-bit ASCII code, plus a parity bit, and the key-pressed signal (keyboard strobe). In addition, two key-switch non-encoded functions were available: "REPEAT" and "INT" (similar to WRU). All outputs were TTL-compatible positive true logic levels, although each of the eight data bit outputs was capable of driving only one TTL load.

The reason for acquiring the keyboard in the first place was to incorporate it in a computer terminal with video display to provide a man-microprocessor communications link. However, other applications came to mind, such as converting the 8-level ASCII code to Baudot 5-level code for amateur band use. And, should the FCC see fit to permit 8-level codes on the amateur frequencies, a proper interface would make such operation easy to accomplish. It became apparent that a number of keyboard support functions such as character counter, EOL indicator, repeat function generation, data output buffering, and keyboard strobe control would be required to provide maximum versatility in the aforementioned applications.

After an analysis of the keyboard support requirements and a projection of probable usage of the keyboard in varied applications, a logic diagram evolved that met all the requirements for my particular keyboard. It should be noted that keyboards, like canned soup, come in many varieties. Some designs have data outputs that are negative true TTL levels (mark = low level). Some have mixed outputs where the strobe is positive logic and the data bits are negative logic. Some recent designs have on-board LSI encoders that have a built-in repeat function (the strobe signal pulses at a ten Hz rate when a character key is held down more than about ½ second) while others do not even have a

repeat key. So as to make the support logic as versatile as possible, a number of options were provided in the final design and the result was named the Keyboard Interface – version 1 (KBI-1). Fig. 1 illustrates the interface unit logic diagram and connection to the keyboard. Fig. 2 shows the Digital Read Out (DRO-1) logic diagram which includes the EOL decoder.

Features

1. Provides buffered (up to 30 TTL loads) positive true data outputs (U3, U4) for the eight data bits with either positive true or negative true inputs.

2. Provides for strobed (3-state) outputs to allow connection to standard data bus, or normal 2-state outputs by means of jumper JM5.

3. Provides repeat function generator if desired (JM6).

4. Allows strobe and repeat functions from either positive or negative logic keyboard outputs (JM1, JM2, JM3, JM4).

5. Provides four variations in strobe pulse outputs:

a. Negative-going strobe pulse remaining at a low level until key is released (strap JM7 A to B).

b. Positive-going strobe pulse remaining at a high level until key is released (strap JM7 A to C).

c. Negative-going strobe pulse with variable delay and variable pulse width (strap JM7 A to D).

d. Same as letter c except positive-going strobe pulse (JM7 A to E).

6. Provides a character counter and LED display that counts only the printing ASCII characters plus space bar. Counter is reset to ØØ on receipt of ASCII LINE FEED function.

7. Provides End-Of-Line (EOL) indication at any desired character count. EOL indicator is also reset by the LINE FEED function.

Circuit Notes

For interface to keyboards with positive true logic outputs, U3 and U4 should be the 74367 non-inverting 3-state buffers. In this

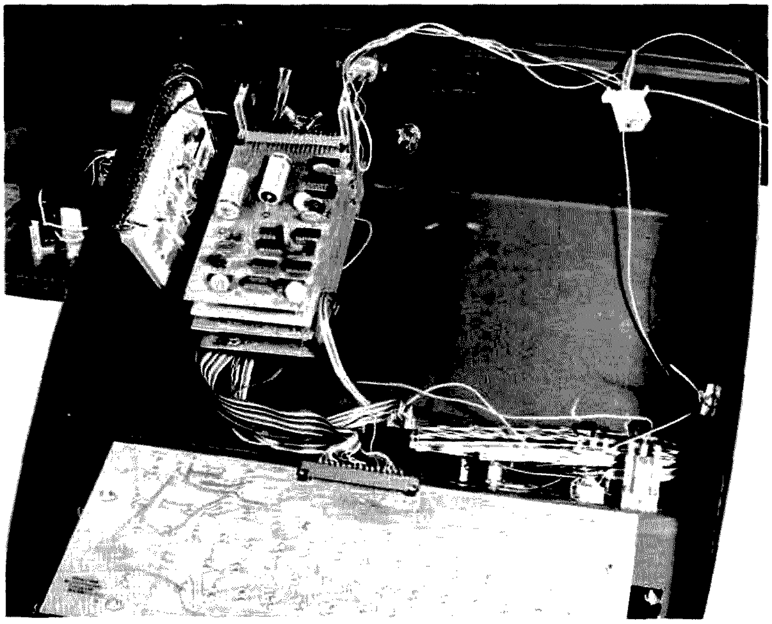

Inside view of console showing method of mounting and interconnecting the five PCBs and keyboard. The PCB on the far left is a catch-all for peripheral drivers and other accessory functions.

case U3A and U4A are jumpered as follows: U3A – JM1 open, JM4 A to B; U4A – JM2 open, JM3 A to B. Note that in this configuration all keyboard data outputs must be positive logic including the strobe and repeat signals. There is no provision for handling negative logic strobe and repeat signals when data bits are positive logic. If required, outboard inverters could be used in this case.

For interface to keyboards with negative logic data outputs and *negative or positive* logic strobe and repeat signals, U3 and U4 are 74368 inverting buffers. Pinout and control levels are identical with the 74367. For a negative logic strobe from the keyboard, U4A JM2 is open and JM3 A to B. For positive logic strobe, JM2 is jumpered and JM3 A to C. Similar jumper conditions apply to U3A for negative or positive logic REPEAT signals.

If the keyboard has on-board repeat character function, then U1, U2A, and U3A are not required and may be disabled by connecting JM6 A to C (in this case U1 and associated capacitors and resistors need not be installed). If keyboard has the repeat function key but no repeat oscillator, connect JM6 A to B for a ten Hz pulsing of the keyboard strobe.

If normal non-strobed bipolar data outputs are desired (no high impedance third state), connect JM5 A to C. If 3-state data outputs are desired (U3 and U4 pass data only during presence of keyboard strobe pulse and outputs revert to a high impedance state when strobe pulse is not present), connect JM5 A to B. For initial tests of the KBI-1, JM5 should be strapped A to C.

The four variations in strobe signal output are selectable by JM7. Connect JM7 A to B for negative-going strobe staying low until key is released, JM7 A to C for inverse (positive-going strobe staying high until key is released). JM7 A to D and A to E select negative or positive strobe pulses as required. U14A R5 and C4 are selected to provide the

References

[1] Electronic Development, Inc., PO Box 951, Salem OR 97308.

[2] Hoff, Irvin M., "The Mainline UT-4," RTTY Journal, March, 1975, p. 4.

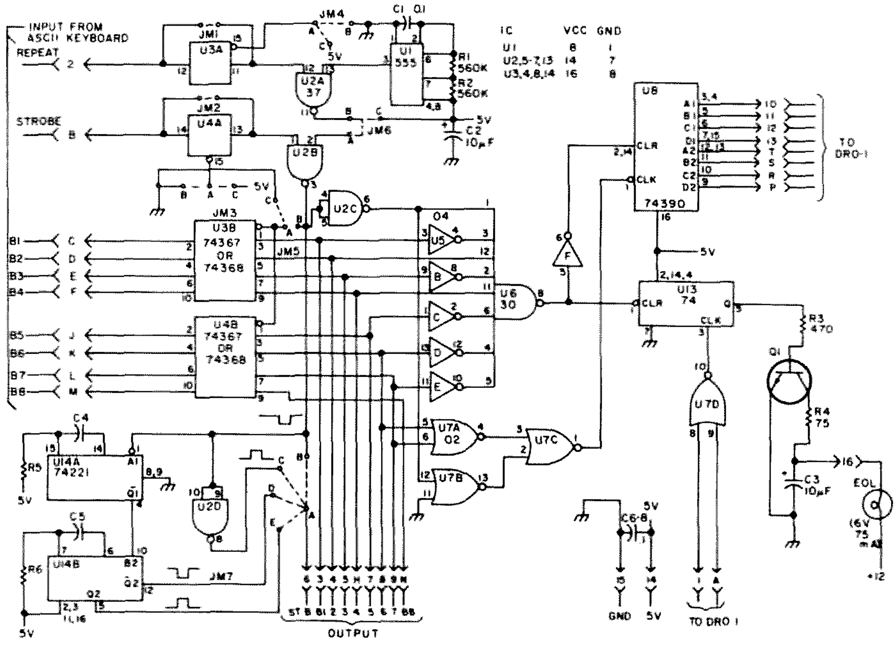

Fig. 1. Interface unit logic diagram and connection to keyboard.

required strobe delay, and U14B R6 and C5 are selected to provide the desired pulse width.

Thus, it is apparent that while the KBI-1 will provide interface for the majority of keyboard logic configurations, all possible permutations are not available. The KBI-1 is *not* directly compatible with non-coded keyboards, keyboards coded for IBM codes such as EBCDIC or SELECTRIC, or Keypunch (Hollerith) codes. In other words, before you consider use of the KBI-1, your keyboard must meet three conditions: 1. Outputs must be in a 7-bit parallel ASCII encoded format with or without parity bit. 2. Outputs must be TTL-compatible. 3. Must have a strobe (keypressed) signal output. The character counter section of the KBI-1 provides a two-digit display (ØØ to 99) of the number of printing characters (and space bar) generated. A portion of this circuit is located on the DRO-1 board (see Fig. 2). It will not count control functions. The display is reset to ØØ whenever LINE FEED key is pressed. EOL indication is provided by lamp DS-1. This circuit operates by detecting a preset number determined by strapping outputs of U11 and U12 to the inputs of U7D. Decimal thumbwheel switches (S1, S2) may be used for convenience in changing the set point if desired. Otherwise, straps are run from U7D inputs to the desired outputs on U11 and U12. At the preset count, the EOL indicator illuminates and remains illuminated until LINE FEED key is depressed.

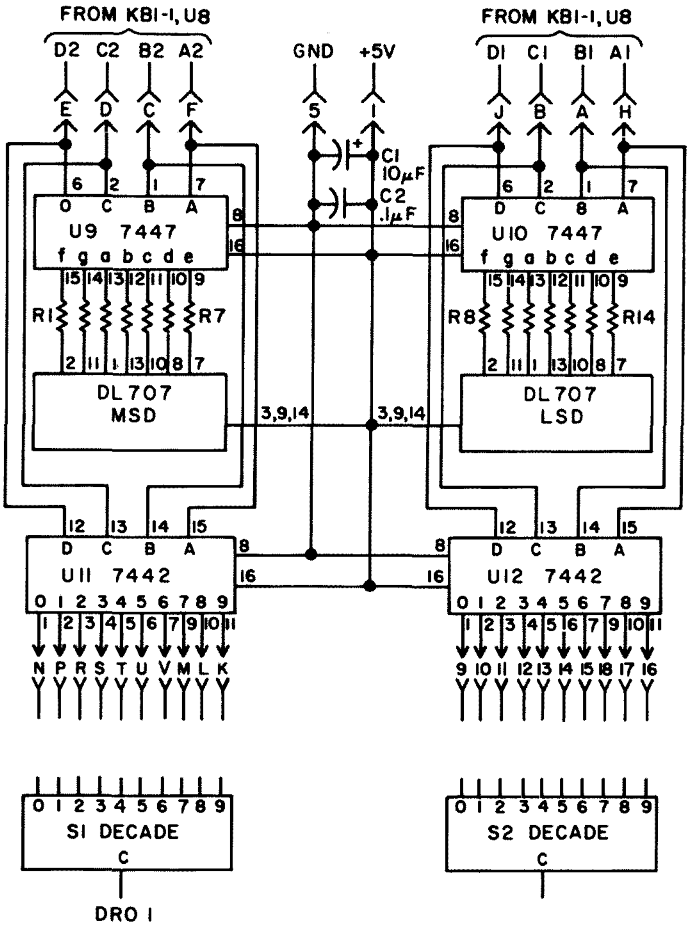

Fig. 2. Digital Read Out logic diagram, including EOL decoder.

Construction

Circuit layout and wiring is not critical provided normal rules of TTL logic are followed. Printed circuit boards greatly facilitate and speed construction and are recommended in particular to those who are not familiar with digital logic hardware. New, high quality components should be used to reduce or eliminate debugging problems. Surplus or reclaimed components may be used if you have the proper facilities

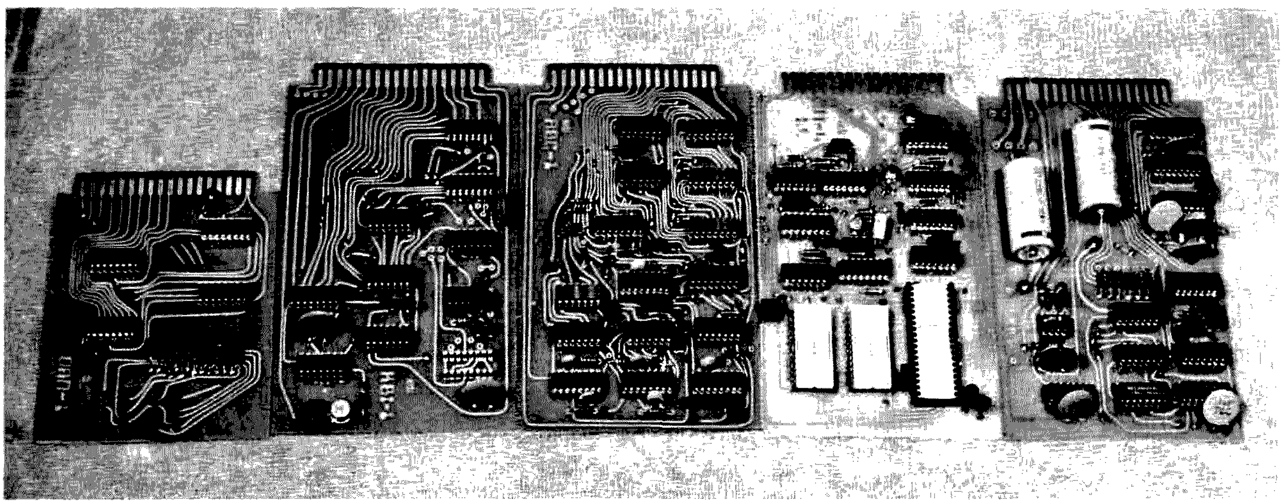

The five printed circuit boards from left to right: DRO-1 character counter and display driver (short board), KBI-1 interface, ABC-1 ASCII to Baudot converter, UT-4 i-f main board, UT-4 i-f auxiliary board.

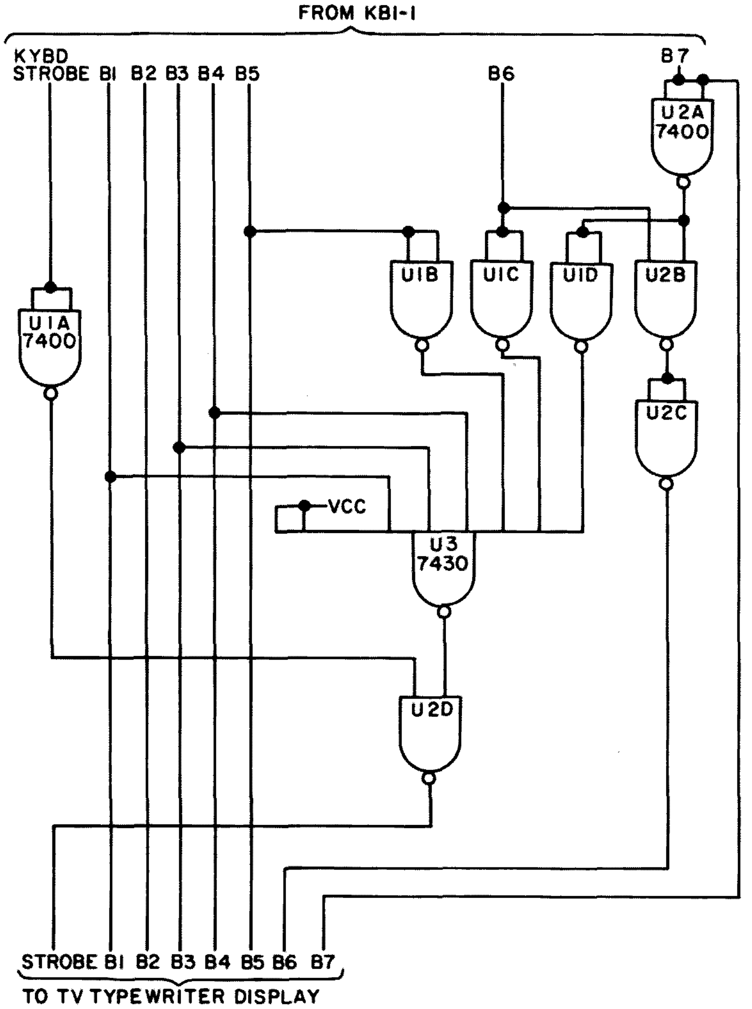

Fig. 3. Adaptor for driving SWTP TV Typewriter video display from KBI-1.

for testing. Sockets or Molex pins are recommended for the ICs as even brand new chips from a franchised distributor have been found defective. Check and double check the orientation of pin 1 of the chip with the socket.

CI, the timing capacitor for U1, may require selection to keep the repeat function rate at ten Hertz or less. R1 and R2 should be 5% ¼ Watt. R4 is required for the recommended EOL lamp and +12 volt supply. R4 may be replaced by a jumper if a 5 volt lamp and +5 volts are used in this application.

Printed Circuit Boards

Electronic Development Inc. (EDI)[1] of Salem, Oregon has been authorized to make the two printed circuit boards (KBI-1 and DRO-1) available for this project. No other sources of PCBs are expected to be available. PC boards only, or complete kits may be obtained. See EDI ads in *73* for description and availability. The boards are high quality epoxy glass, double-sided with plated-through holes and fit standard .156 inch spacing, 18-position double readout edge connectors. The edge connector references on the logic diagrams are identical with the EDI PCB edge connections.

Troubleshooting

At the time of this writing, three persons have built the KBI-1 and three different ASCII encoded keyboards have been used. These were surplus units manufactured by Clare-Pendar, Microswitch and Tektronix. Various problems were encountered in check-out including poor solder joints, missed solder points, trace to trace solder bridges, overloaded power supplies, and in several instances defective ICs were found. In each case a carefully thought out, logical approach to troubleshooting pinpointed the problem area. While a good triggered oscilloscope is a most useful adjunct to logic circuit troubleshooting, it should be pointed out that Peter K6SRG debugged and checked out early prototypes of the KBI-1, the ABC-1 ASCII to Baudot Converter, and UT-4 i-f circuits using nothing but a VOM (and an ice cube to find a temperature sensitive 74390!).

The KBI-1 was designed to be located in the immediate vicinity of the ASCII keyboard. Leads from the keyboard data outputs to the KBI-1 should not exceed 20 inches. Lines of greater length will cause ringing, especially on the keyboard strobe pulse. Ringing on the strobe pulse will cause multiple outputs from a single keystroke. Jim WA7ARI used a six foot cable between his keyboard and the KBI-1 but it was necessary to use type 75188 line drivers at the keyboard and 75189 line receivers at the KBI-1 inputs to prevent ringing. The same line length restrictions apply to the KBI-1 outputs. You must use transmission line techniques for any line over approximately 20 inches.

KBI-1 with TV Typewriter Display

Many RTTY enthusiasts have built the Southwest Technical Products Corp. (SWTP) "TV Typewriter" video display. Fig. 3 illustrates a special adaptor used between the KBI-1 output and the TV Typewriter input so that the video display has a CR/LF on receipt of LF instead of CR. The video display will still provide automatic CR/LF at the end of its 32 character line if an LF is not received prior to this point. Credit is due WA7ARI for developing this circuit.

Acknowledgements

Recognition and appreciation of their contributions, comments and

encouragement are due members of the 3612.500 autostart net, in particular W6FFC, W6GQC, K6SRG, WB6WPX and WA7ARI. Thanks is also due those members of the net whose patience was sorely tried during the development period. Others who contributed comments and suggestions included K2SMN, WA5NYY and KL7HOH. The author extends his apologies to anyone whose contributions were overlooked.

KBI-1 Parts List	
U1	555
U2	7437
U3, 4	74367 or 74368 (See text)
U5	7404
U6	7430
U7	7402
U8	74390
U13	7474
U14	74221
C1, 6-8	0.1 uF
C2, 3	10 uF, 16 volts
C4, 5	selected, see text
R1, 2	560k 5%
R3	470
R4	75 ½ W
EOL lamp	6 V/75 mA

DRO-1 Parts List	
U9, 10	7447
U11, 12	7442
Display	DL707 or equiv.
R1-14	270 Ohm
C1	10 mF, 16 V
C2	0.1 mF
S1, 2	Decade thumbwheel switches

ASCII to Baudot Conversion

A forthcoming article will describe an ASCII to Baudot converter (ABC-1) that converts ASCII data from the KBI-1 to parallel format Baudot 5-level code and outputs this data to a FIFO/UART combination such as the UT-4[2]. ■

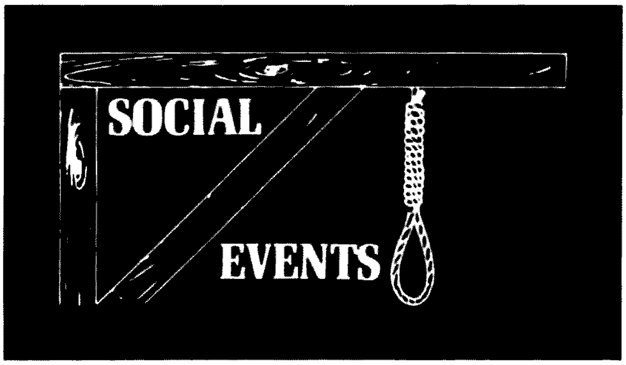

SOUTHFIELD MI
JAN 18

Southfield Amateur Radio Club's 10th Annual Swap and Shop, the largest in Michigan, will be held January 18, 1976 at Southfield High School, Ten Mile and Lahser Rds., Southfield, Michigan. Tickets $1.50. For more information regarding tickets and/or tables write to Mr. Robert Younkers, 24675 Lahser Rd., Southfield, Michigan 48075.

WAUKESHA WI
JAN 24

The 4th annual Midwinter Swapfest of the West Allis Radio Amateur Club will be Saturday, January 24, 1976 starting at 8 am at the Waukesha County Expo Center. This year in new larger building! Directions: I-94 to Waukesha Co. F, south to FT, west to Expo Center. Talk-in on 146.52 MHz. Tickets $1.50 advanced, $2.00 at door. (Dealers: advanced registration only.) Write: WARAC, P.O. Box 1072, Milwaukee WI 53201.

VERO BEACH FL
MAR 20-21

The Bi-Centennial Treasure Coast Hamfest will be held at the Vero Beach Community Center Saturday and Sunday, March 20 and 21, 1976. Sponsored by Vero Beach Amateur Radio Club, Inc., and St. Lucie Repeater Association, P.O. Box 3088, Vero Beach FL 32960.

WASHINGTON DC
MAR 24

1976 ARRL Technical Symposium on Mobile Communications will be held on the evening of Wednesday, March 24, 1976 at the Statler Hilton Hotel, Washington, DC. Areas of interest are: HF/VHF/UHF mobile communications, repeater technology and operations, signaling and control techniques, special mobile communications (AMSAT, ATV, RTTY, etc.); especially subjects of interest to both amateur and commercial mobile radio users. Summaries are due by February 1, 1976. Manuscripts, photo of author and biographical sketch of amateur/electronic background due by March 1, 1976. Write: Paul Rinaldo K4YKB, 1524 Springvale Ave., McLean VA 22101 or call (703) 356-8918 evenings.

ST. CLAIR SHORES MI
APR 4

The South Eastern Michigan Amateur Radio Association is holding its Eighteenth Annual SEMARA Swap 'N' Shop on April 4, 1976, from 8 am EST to 3 pm EST. It will be held at the South Lake High School in St. Clair Shores, Michigan, on the Southwest corner of Nine Mile Road and Mack Avenue.

HAM HELP

According to long-standing policy, *73 Magazine* makes a continual effort to match those in need of technical help or instruction with those who feel they can offer it. If you find yourself in one of these two categories, please do yourself and amateur radio a favor by contacting Ham Help, *73*, Peterborough NH 03458.

W5YF, the SMU ARS, is now offering Novice licensing mini-courses.
TIME: 9:30 am – 12 noon
DATES: Every 2nd, 3rd and 4th Saturday of the month.
WHERE: W5YF, Rm. 324, (Aruth Eng.) Southern Methodist Univ., Dallas TX 75275 (attn: WA2JRX).
PHONE: 692-3372
ADVANTAGES: Success rate running a mere 100%.

Got a tough schedule? We can accommodate you best of all. We're an F.B. station to learn on and get those first QSOs under your belt!

Bob Monaghan WA2JRX/5
Dept. of Anthropology
SMU
Dallas TX 75275

Help!

David Geerinck
920 Wolfe Road
Richmond IN 47374

I'd be happy to help anyone in any way to get his ticket.

Vick Martin WA6UOC
5834 Shoshone
Encino CA 91316
(213) 881-1058

I'd be glad to offer some HAM HELP.

Fred Layton
Rt. 18 Box 430
Olympia WA 98502

Our "Amateur Radio Education Association" started meeting in January, 1975, and now has about twenty active members.

While most of our members are already licensed, we would be very much interested in having non-licensed people, with an interest in amateur radio, get in touch with us. The club has the potential to set up classes for these people and our instructor, William Farone (Extra Class), has the ability to set up a comprehensive instructional program in addition to being able to provide the motivation for learning.

Our base of operation is in Bergen County, which is in the northeastern part of New Jersey. For practical purposes, I think anyone living within a ten mile radius of the George Washington Bridge would be able to participate in our activities.

We would sincerely appreciate any help you could give us in recruiting new members — perhaps a mention of our organization in the "Ham Help" column would reach a number of both "would-be" and currently licensed amateurs.

William G. Lenz WN2VXL
538 Second Street
Palisades Park NJ 07650

Improve Your SSTV with The FRAMER

by
E. Sommerfield W2FJT
49 Spring Road
Poughkeepsie NY 12601

Next to multi-path sync problems, there is nothing more aggravating than the reception of only a portion of an SSTV picture (frame) completely out of vertical synchronization, and subsequently overlaid by a different portion of the same picture when the next frame starts.

This article describes a simple remedy that forces a vertical sync pulse at the beginning of each transmission, i.e., when the transmit/receive relay is activated. This will insure that when your transmission starts, your camera begins scanning from the beginning of a frame.

The Robot Research Inc. Model 80A SSTV camera was used as the example in this article, but the principle can be applied to other cameras that use the line frequency, together with a frequency divider, to obtain the vertical scan rate.

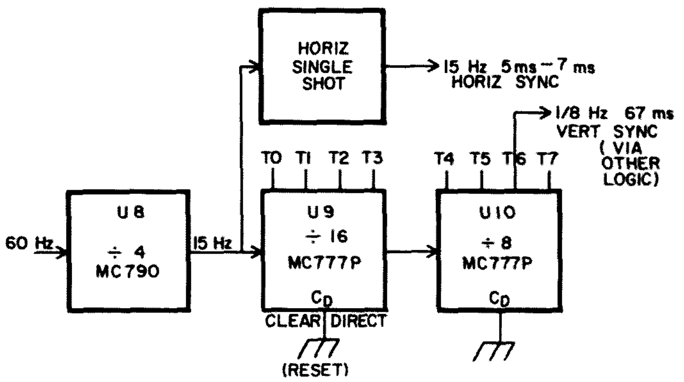

Fig. 1.

Fig. 1 shows a block diagram of the vertical timing chain of the Robot 80A SSTV camera; this is a common configuration for obtaining an 8 second vertical frame interval. Notice that the vertical sync pulse, which is used to reset the receiving monitor vertical sweep deflection, is free-running. If, for example, your transmission begins when T6 is "on" and T0-T5 are "off," then your picture would be transmitted starting at the center and continuing for one half a frame before a vertical sync pulse is transmitted. Likewise, at the monitor, one half a frame would be displayed starting wherever the monitor vertical deflection was at the time transmission began.

The simple solution to this problem, shown in Fig. 2, is to reset the vertical timing chain whenever a transmission begins, and hold it in the reset condition for the length of a vertical sync pulse: about 30 to 70 milliseconds. (Pulse times longer than 70 milliseconds will not adversely affect operation of either the camera or monitor.) When the 80A vertical timing chain is in the reset state, a vertical sync pulse is generated by the camera.

Fig. 3 shows a typical frequency divider. Most frequency dividers, also known as counters, have provision for at least one DIRECT input called a CLEAR DIRECT (Cd). A direct input is an input that overrides any clocking, toggle, or counting operations. Due to the grouping of the divider elements of 4 to a DIP module, each Cd input usually resets 4 divider elements. The

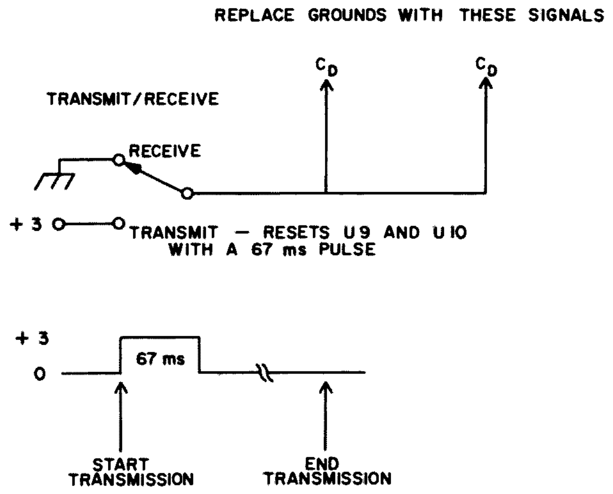

Fig. 2.

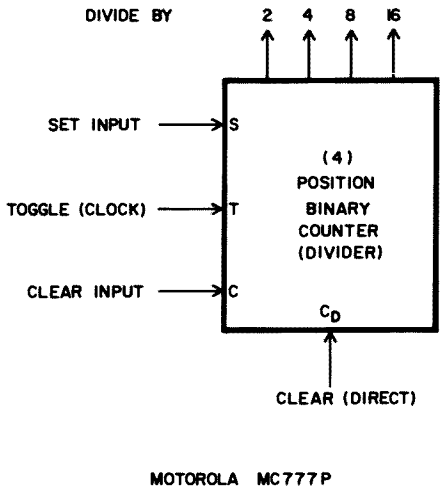

Fig. 3.

80A has 2 such divider modules, U9 and U10.

There are many electronic ways to generate a single vertical sync pulse in coincidence with the transmit/receive relay closure, but the relay circuit shown in Fig. 4 is the simplest and easiest to implement. An electronic version using the unused half of U4 was breadboarded and tested in the camera, but was not implemented due to the extensive modifications required to the U4 land pattern. It is shown in Fig. 5(a) for the reader who is inclined towards electronic-only circuits.

The relay circuit, shown in Fig. 4, operates as follows:

In receive mode, the relay K1 return path via the transmit/receive (T/R) relay is open, and C1 will charge to +15 volts through R1 in about one second. When the T/R relay is closed at the beginning of a transmission, C1 will discharge through the parallel combination of R1 and the resistance of the coil of relay K1. The value of C1 was chosen in conjunction with the 1000 Ohm relay coil resistance, so that that the current through relay K1 coil would not drop below 3 mA until about 70 ms after the T/R relay closed.

Who wants to hear, "Send me a few more frames, the first two were out of sync"?

Fig. 4(a). Original wiring.

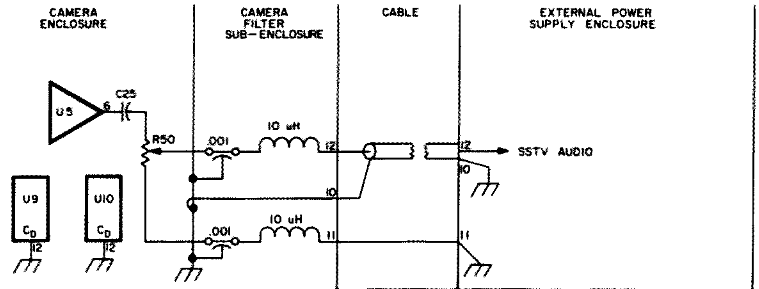

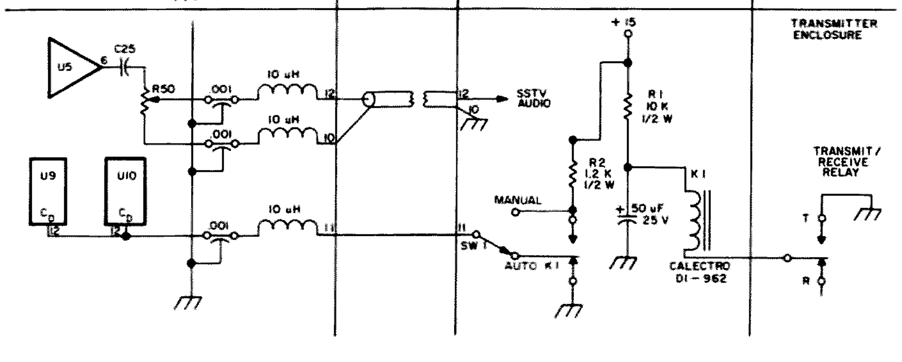

Fig. 4(b). Modified wiring.

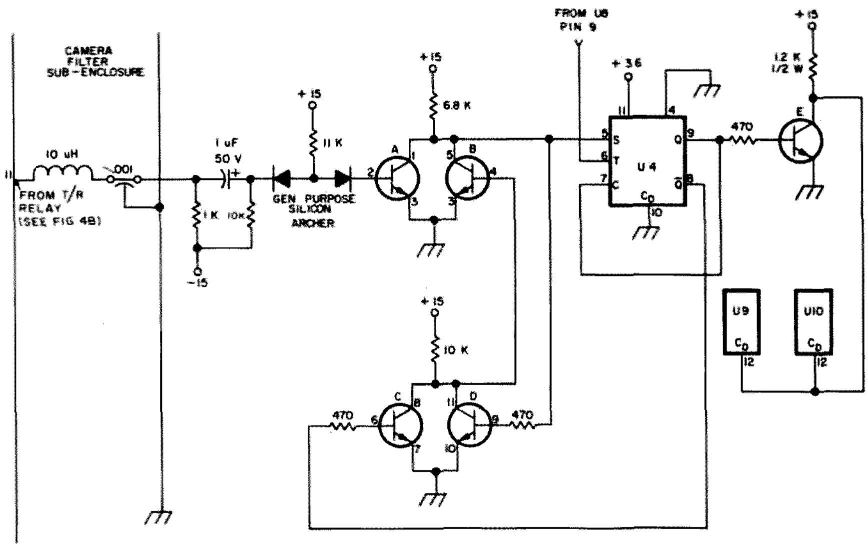

Fig. 5(a). All resistors ½ Watt. Transistors A, B, C, D and E are RCA CA-3046 five transistor array module.

Relay K1 will open when the current in its coil drops below 3 mA. C1 will discharge to +1.6 volts and stay at this value until the T/R relay opens. The current through K1, at +1.6 volts, is 1.6 mA, which is not sufficient to keep K1 closed. Relay K1, therefore, will close at the beginning of a transmission and reopen after about 70 ms.

When relay K1 closes, +15 volts is applied, via R2, to the Cd inputs of both U9 and U10, the vertical divider chain. When this occurs, all 8 counting elements of the divider chain are reset, and, as was mentioned earlier, the 80A generates a vertical sync pulse. The value of R2 was chosen so that the voltage on the Cd signal line is about +1 volt as required by the manufacturer's specification for the MC790P. The rearrangement of cable wires between Figs. 4(a) and 4(b) was necessary in order to obtain the wire for the reset line. The video output circuit is functionally the same in both circuits.

Those readers who are familiar with relay operation might question the lack of concern with relay contact bounce. Relay contact bounce is present of course, but the vertical sync filter in the monitor only passes sync pulses longer than about 30 ms. Contact bounce only lasts for about 10 ms to 20 ms, so no problem was experienced in this area.

Switch SW1, which is optional, allows manual reset of the counting chain. If SW1 is left in the manual position, 1200 Hz will be continuously generated. This 1200 Hz-only condition is useful for calibrating the 1200 Hz frequency.

The electronic circuit shown in Fig. 5(a) has been described in many publications, including the RTL Cookbook[1]. Its operation is summarized by the waveforms shown in Fig. 5(b).

Fig. 6 shows how to modify the printed circuit pattern in order to isolate the Cd input pins: pin 12 on U9 and pin 12 on U10.

Fig. 4(b) shows how pins 10, 11 and 12 on the 80A power plug sub-panel are modified to permit pin 11 to be used for the Cd reset signal line. The power plug connections at the power supply must also be modified as shown in Fig. 4(b).

Relay K1 should be located in the external power supply enclosure in order to avoid

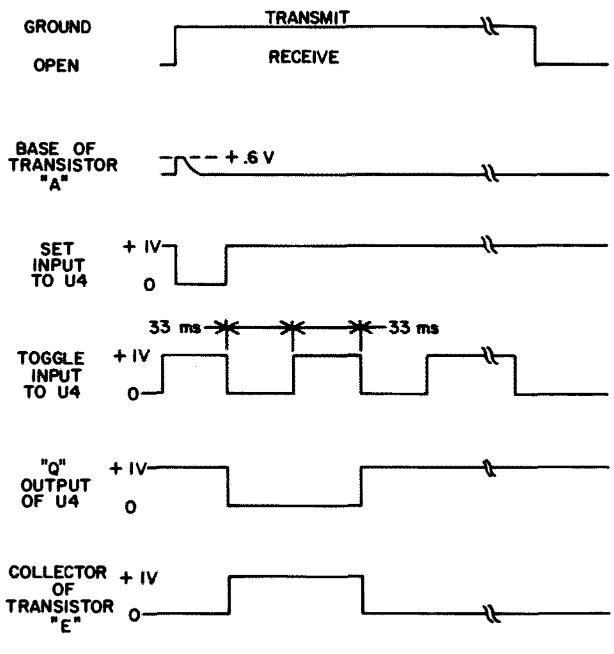

Fig. 5(b).

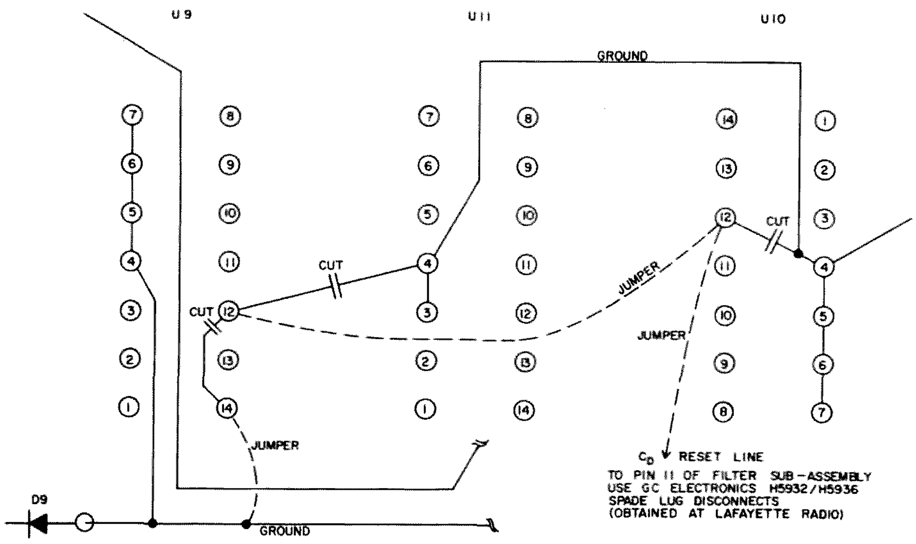

And all this for about $6.00 . . .

Fig. 6. Robot 80A SSTV Camera, wiring side of board.

transient current noise pulses on pin 5, the power supply ground wire to the 80A.

The addition of this FRAMER (FRAME Resetter) to the 80A lets you transmit more complete frames than was possible before; after all, who wants to hear "send me a few more frames, the first two were out of sync"?

The inclusion of the optional manual switch feature also eases the 1200 Hz calibration by permitting a continuous 1200 Hz signal generation.

All this for about $6.00. ■

Reference

[1] *RTL Cookbook,* Donald E. Lancaster, Howard W. Sams & Co., Inc., page 126.

The Experimenter's Dream Card

by
Robert J. Buckman K9AIY
PO Box 1471
Green Bay WI 54305

In amateur projects involving integrated circuits, some sort of circuit card is a must . . .

Most amateurs have had some experience with printed circuits or their predecessors, perfboard. This article summarizes my experience with printed circuitry and develops a general purpose card for amateur use.

The advantages of printed circuit cards for breadboarding or permanent construction are many! Serviceability, dense packaging, reproducibility and reduced wire lengths for improved high frequency response are examples. In amateur projects involving integrated circuits, some sort of circuit card is a must.

Industry has used printed circuits for years and has adopted several standards in sizes and board edge pin placement. Card cages are available which will accept these standard size cards and allow very dense packaging. Standard individual cards with identical circuits on them allow swapping out cards during troubleshooting until the faulty card is located.

Many companies sell standard and special purpose cards either blank or with a pattern etched on them. If you have priced the cards available through Vector, Cambion, Circuit-Stik, EECO or the others, you can see why this article was written.

Card edge connectors are another expensive item; generally, the more pins you try to cram into a socket, and the closer together they must be, the more the connector will cost. We amateurs with limited budgets must find the cheapest connector that will do the job without pricing the project out of sight.

Lately, the simpler and smaller-sized card edge connectors have been turning up at hamfests and surplus markets at substantial savings. This fact is the primary motivation for the circuit cards developed here.

Industry standard card sizes start around 3" in width; several manufacturers produce cards with 4½", 6", and 8½" width. Lengths are not so standard, with 4½" a minimum and 17½" a maximum. Before deciding on a size, let's review the types of circuit card fabrication and applicability to amateur projects.

There are three basic methods of applying a circuit pattern to a card blank: direct etch where the desired copper paths are covered with tape or paint resist before etching, photographic sensitization of a treated board (photoetch) prior to etching, and additive processes where the pattern is added to a blank board (Circuit-Stik is the best example although some companies are plating the desired patterns onto a board). Direct etch is limited by the dexterity of the applier and to simple circuits that are not densely packed. Circuit-Stik is fast but expensive. Photoetch is the choice remaining and, once you get started, relatively inexpensive. This article uses the photoetch technique.

The card stock available will also determine the techniques that are feasible for the amateur. The first card stock to be available at reasonably low prices was the epoxy paper circuit board which came with

one or both sides coated with copper and usually undrilled. Epoxy glass boards are now available, are reasonably priced (about a penny a square inch or less), and are less susceptible to moisture damage. Pre-drilled or punched card stock is available with holes on a standard grid, either 0.20 inch or 0.10 inch. The 0.10 inch perfboard is ideal for integrated circuit cards and only slightly more expensive. Cards are also available with photosensitive coatings for slightly more. I prefer to coat my own boards but that takes practice since it is possible to produce a too thick or too thin coating.

In designing a general purpose card, you must consider both its uses and the rough-order-of-magnitude quantity of boards to be produced. I presently have over twenty projects in some phase of design or construction. Many of these projects will use several circuit boards. A review of these projects shows many to be entirely digital, or at least, use the dual-in-line (DIP) package.

My circuit card is based then on the standard DIP outline. With all the different configurations and pin counts (8, 14, 16, 18 and 24), etching power buses on the card has several disadvantages. If many DIP chips must be accommodated, say thirty or so, the number of holes to be drilled will be over 300 without considering interconnections or discrete components! Test points, trimpots, switches, lamps and LEDs must be considered and allowed for. Finally, sockets and input/output connections may be needed.

A review and design tradeoff of all the above considerations have resulted in the general purpose card described here. The basic card is epoxy paper perfboard with 0.10 inch grid holes, copperclad on one side,

If you have priced the commercially available cards, you can see why this article was written . . .

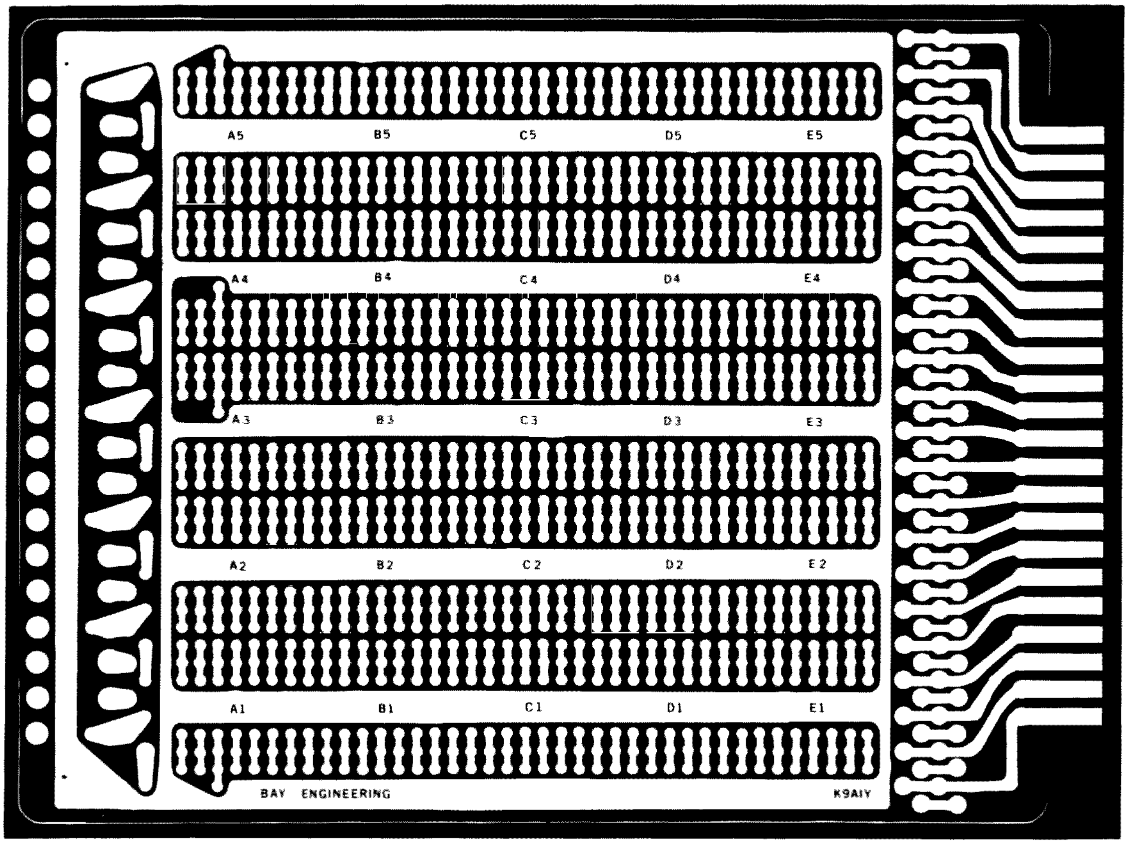

Fig. 1. Full size copper-side foil pattern.

4½" wide and 6" long. Vector makes the boards I have used (part number 64P44-062EPC1), but other manufacturers make similar boards. Fig. 1 is the full size copper-side foil pattern and Fig. 2 is a component-side overlay showing one of the many configurations possible.

This board will hold 25 14-pin DIP chips, six test points and 7 trimpots simultaneously. A maximum of 30 14-pin chips and 19 test points may be mounted. 24-pin DIP chips also fit on this board to a maximum of 9 24-pin packages. 22 input/output pins, spaced 5/32 (0.156) inch apart form the board edge connector. If a double-sided board edge connector is desired, a Circuit-Stik connector pattern sub-element (part number 1365-005) can be overlaid on the component side and will mate with pads already provided on the foil side. The dual-sided connector will provide 44 independent input/output connections; however, the older 22 pin board edge connectors are more readily available than their dual-sided brothers.

The two additional pads connected to each DIP pin allow a daisy-chain connection to each pin (one wire in, one wire out). Since only a ground bus is etched on the foil side, the types of ICs are not restricted to those with power connections on any particular pins. None of the commercially manufactured cards I have seen allow mixtures of 14, 16 and 24 pin DIP chips or allow test points and trimpots simultaneously.

A variation of this board, the same physical size but without foil or allowances for trimpots or test points, has been used with wirewrap sockets which are finally becoming available. A plastic hand wirewrap tool has become available from Cambion (part number 435-1816-01-00-16) for the nominal price of two bucks. Up to 45 14-pin wirewrap sockets may be stuffed on a board this size. Unless the complete project will fit on this board, the 44 maximum input/output connections will restrict the number of ICs that can be used. The cards above can be constructed for under five dollars in quantity and are about half the price of a similar commercially manufactured card. ■

COMPONENT SIDE

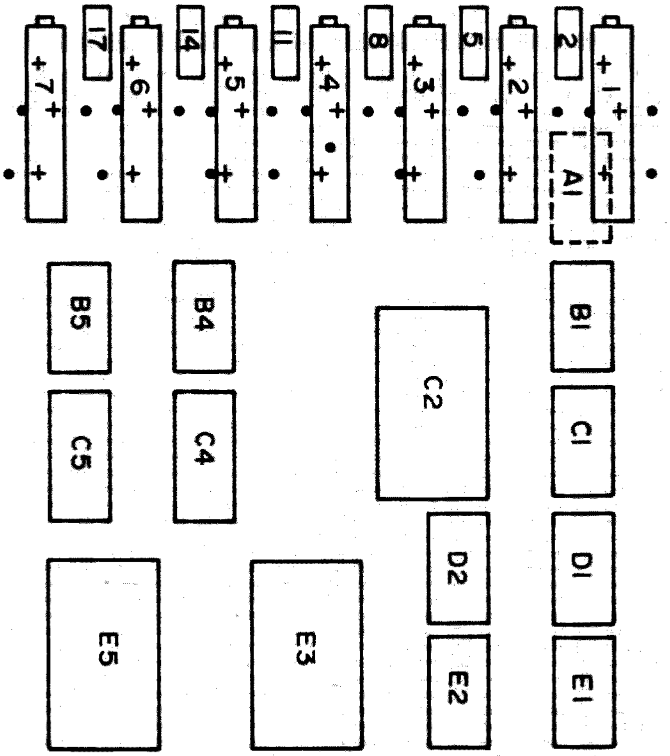

Fig. 2. Component-side view of one example configuration.

Run The Legal Limit with One Shoe

by
Jack B. Friend WA7IEO
315 Carole Circle
Salt Lake City UT 84115

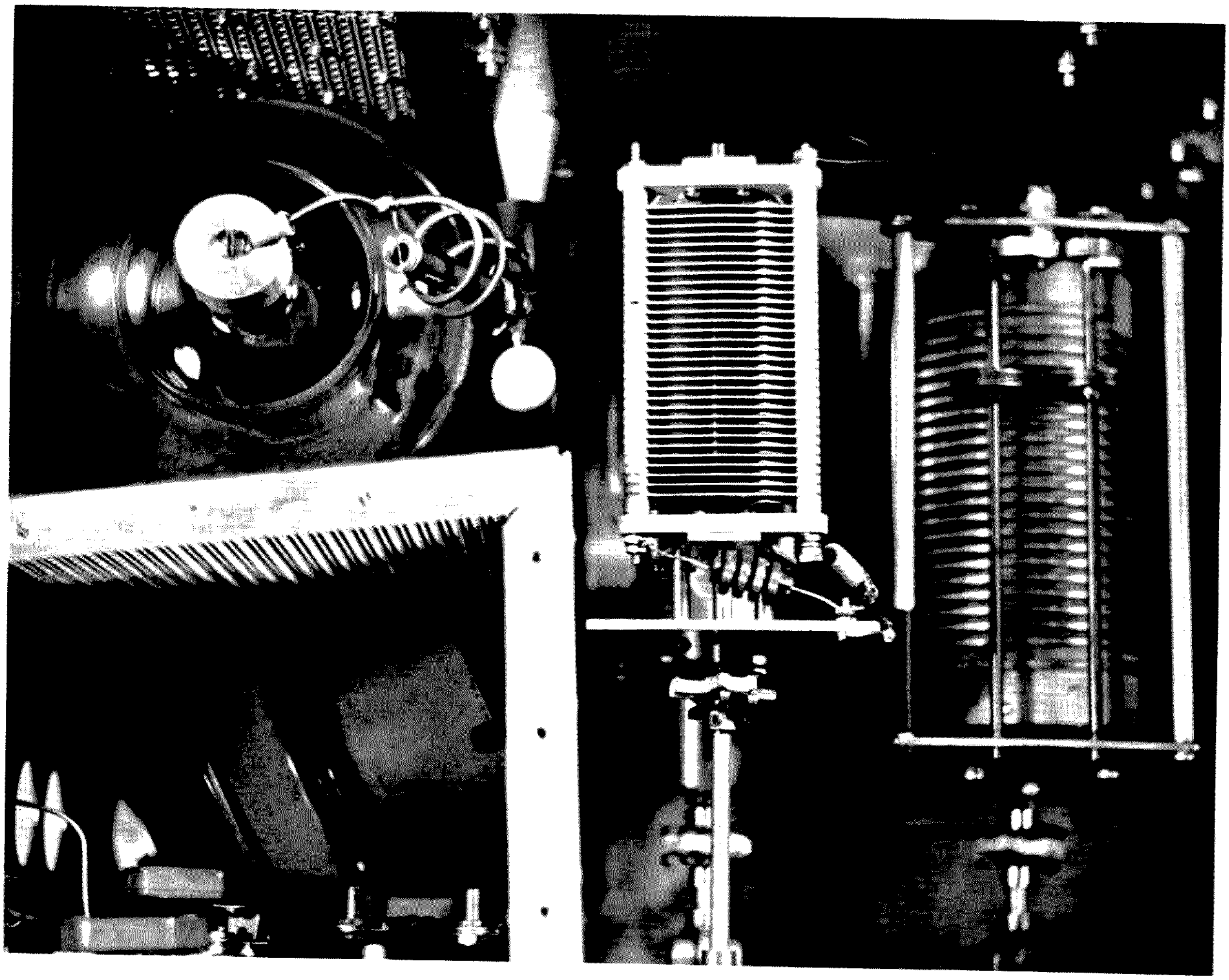

Amplifier plate circuit.

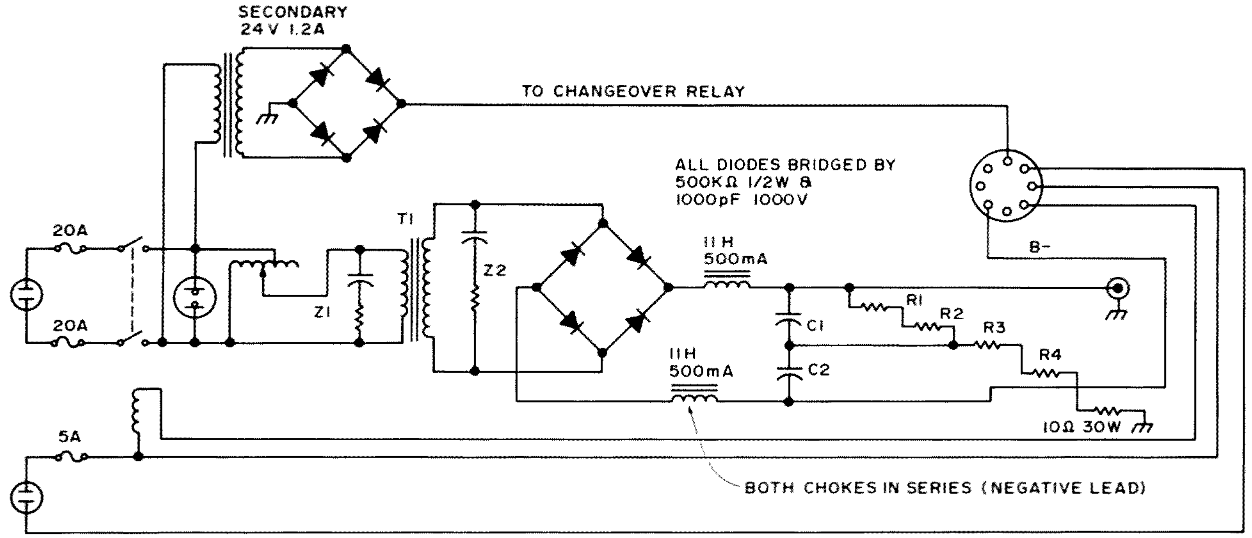

Fig. 1. High voltage power supply. Note that the high voltage bridge actually has 40 diodes.

The design of this grounded-grid linear allows the use of either the 3-1000Z or 4-1000A. The components were chosen to operate well within their limits, my monetary possibilities, and to offer the best voltage regulation in the power supply. Large overall size, weight and no portability resulted, but then those weren't factors here.

Filament Circuit

Two 7.5 volt, 10 Amp transformers that just fit under the four inch chassis were found in unused surplus for a good price and work well. Each side of the filament is fed through a bifilar wound choke. Each choke is wound with #10 wire on the whole length of an Amidon ferrite rod – the kind available in the Amidon kit. This heavy construction results in very little loss of voltage through the chokes. The face of the filament voltmeter is marked to give precise setting of the voltage. The variac in the line offers one the ability to slowly bring the filament up to temperature. This procedure is highly recommended by Erwis Isgitt W7SLC of Eimac in Salt Lake City, to improve tube life. Be sure to fuse the variac, in this case at 1.6 Amps. The B-return is to only one of the two transformers to avoid difficulties with balancing.

In this linear there is no tuned input, but if matching presents a problem or there are not at least 125 Watts available for drive, put one in. Note the chart for a tuned input to a 4-1000A at plate potential of 5 kV.

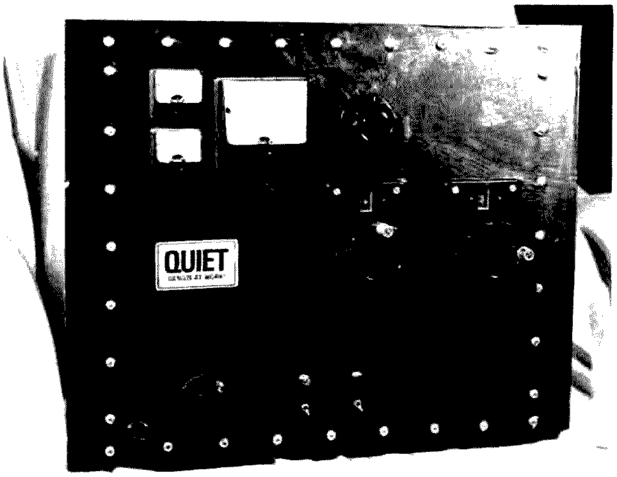

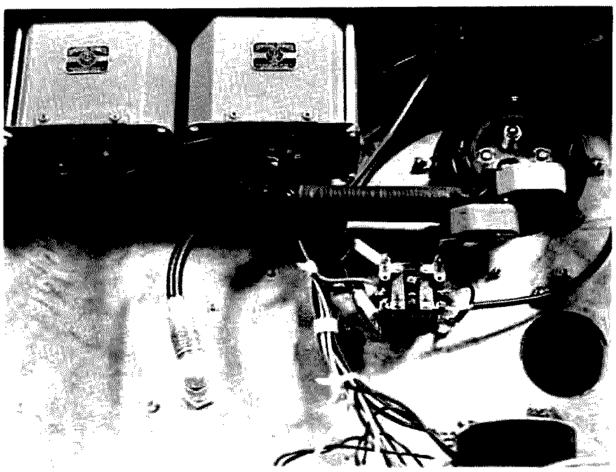

Front panel of amplifier – note turns counter knobs; underside of chassis showing filament transformers, tube socket, and relay.

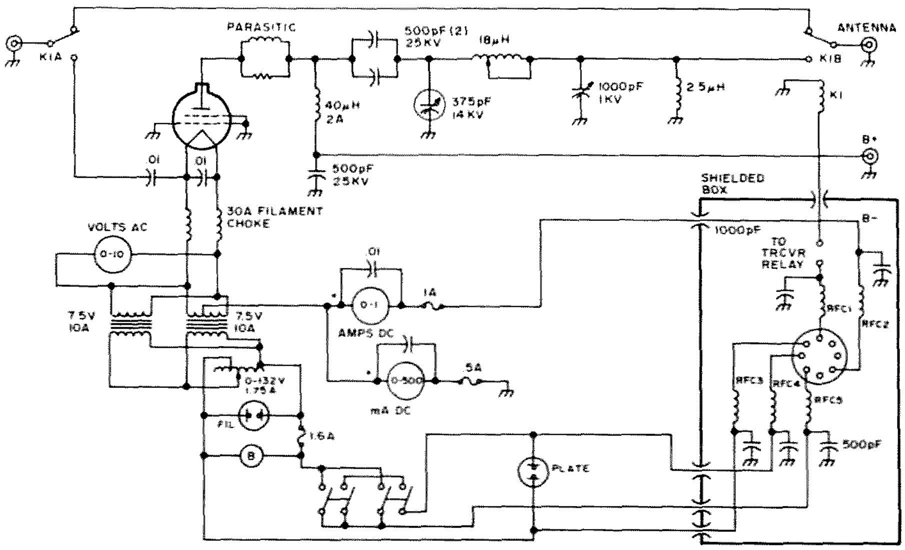

Fig. 2. Schematic of "Super Bottle" amplifier.

Tank Circuit

William Deane built the two Amp plate choke which is surrounded on one side by the tube and on the other by the stacked tune and load capacitors. The roller coil will provide about 18 uH maximum. The loading capacitor is not sufficient for 80 meters with the triode, and the coil is marginal for the tetrode on 80. For best results, Q = 12, the coil should have about 20 uH and the loading capacitor about 1800 pF.

Metering

Separate meters for plate current, plate voltage, grid current, and filament voltage add considerably to the overall cost, but there are times when one needs all values at a glance. Fuses in the lines to the plate and grid current meters save meters. My first linear blew both meters when the B+ shorted through a faulty component. Since then test and "burn" trials have blown fuses instead of meters. The meters are bypassed with mica, not ceramic, capacitors, as the latter are not always reliable in rf applications. The meters are in the same compartment with the blower and all leads are "fed-through" with capacitors into the next compartment.

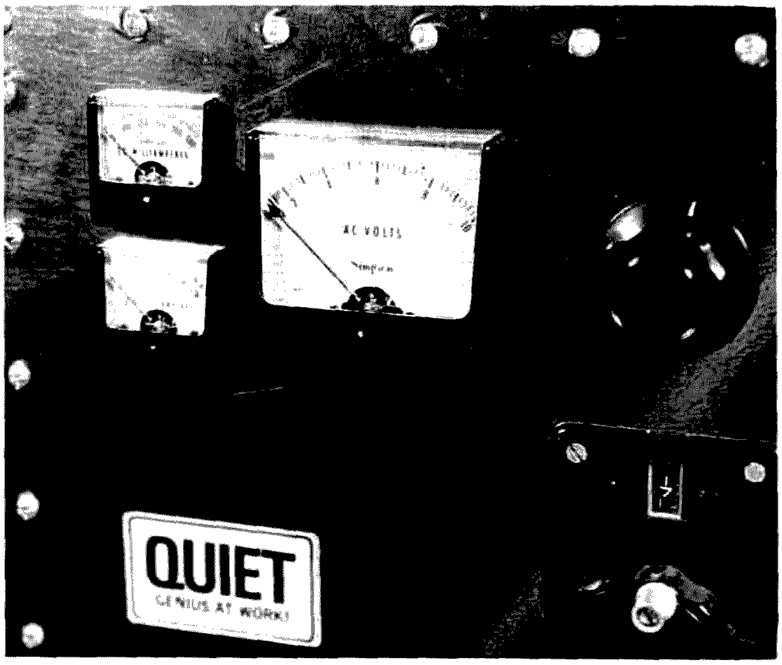

Detail of panel meters.

Power Supply

The power supply is enormous and very heavy! After the plate relay, the ac is fed to the variac, which is turned up slowly to avoid surging. The plate transformer, as well as the two chokes, is from a BC-610 power supply and is rated at about 5 kV at .5 Amp continuous duty. The full wave bridge rectifier has ten kV in each leg built of 40

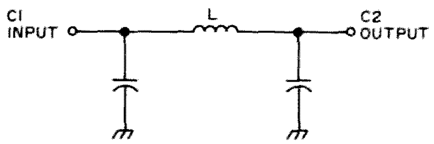

Band	Input C1	Turns L	Output C2
80	–	16 of #18	470
40	512	13 of #16	322
20	337	9 of #14	213
15	247	6 of #13	190
10	227	4 of #13	190

The coil forms should be half inch slug tuned (look in ARRL Handbook).

Table 1. Chart of the input values for the 4-1000A.

Parts List

C1, C2 — 120 uF 3000 V dc isolated from ground.
R1, R2, R3, R4 — 80 kΩ 250 Watts.
T1 — 105, 115 V ac primary 2500, 2000, 0, 2000, 2500 volt secondary. Rated at ≈ 500 mills continuous duty in full wave bridge.
K1 — 24 V dc 15 Amp contacts.
Variac — 0-140 V ac 20 Amps.
Z1 — .01 at 400 V ac in series with 100Ω 10 Watts or arc suppressor.
Z2 — .001 at 25kV in series with 200Ω 25 Watts or arc suppressor.
RFC1-5 — 18 turns #14 enam. wire, close-wound, ½" dia.

1000 piv 2.5 Amp diodes and associated RC networks. The chokes are each rated at 11 Henrys at 500 mills and insulated at 10 kV, but just the same are in the negative lead. The oil-filled filter capacitors are insulated from ground, similar to electrolytic strings, since they are rated at only 3,000 WV dc and peak voltage is about 5,000. The bleeder resistance is a string of four 80k Ohm 250 Watt ceramic covered large economy size units. Two would do, but then the shack would need no heater either.

The chokes are tuned with an oil-filled .05 uF, 10 kV capacitor so that the bleeder can be small, yet the voltage doesn't soar when there is no load on the supply. Here is a simple way to tune a choke: LC = 1.77 (or close will do). The value of a choke, non-swinging, increases when the load current is low. Figure about two times rated value for good quality chokes. Thus, in this case, 1.77 divided by about 2 x 11 (two chokes in series) or 20 = .08 thus .05 is ok. The closer the better; experiment to get the best regulation. L is in Henrys, C in uF.

Control Circuitry

The wiring of the filament and plate relay switches is copied from Max Burggraff's design (note references). No matter which switch is thrown first, the filament is turned on, and both have to be thrown to energize the plate relay. The changeover relay is suitable for transceiver operation. A three pole relay would be useful for biasing the triode under idling conditions, but the 4-1000A only draws about 120 mills at 5 kV, not enough to bother the tetrode.

Miscellany

The components were arranged so that the leads are as short as possible, yet the front panel is not unsatisfactory. The meters are bunched to make shielding easier. I tried to cover a scratched front panel with a very shiny, gold contact paper. Other than the fact that the paper bunched up under the screw heads, it is tolerable. However, I won't do it that way again. The cabinet is built up around a steel chassis (for strength), plated copper. Other than the chassis all the sides are aluminum. I also used aluminum rivets where the joints would not restrict servicing.

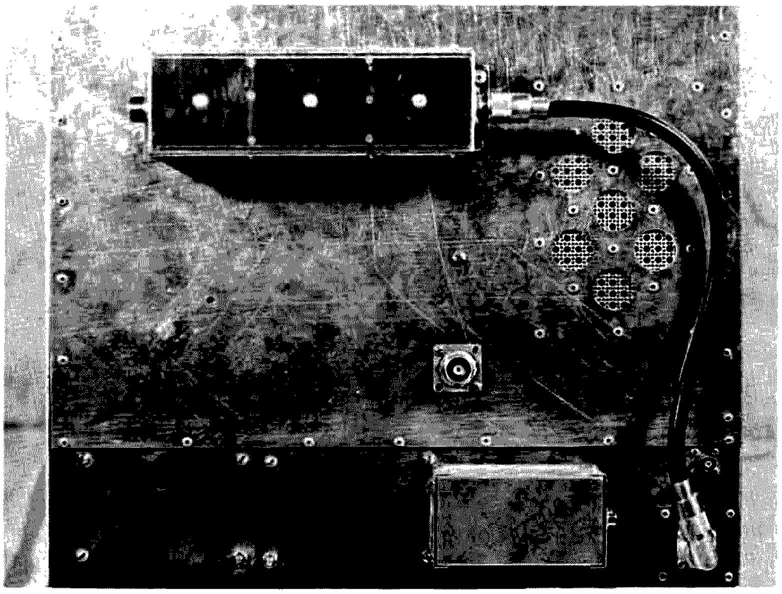

Rear view.

Comment

"Super Bottle" works very well with either tube in the socket, though bias will keep the triode much cooler during standby. Efficiency is on the order of 60% on 20, 40 and 80 meters and less on 15 and 10, due to the less than optimum coil at higher frequencies. The linear is clean according to my monitor scope and the wattmeter indicates a quite noticeable difference over the transceiver. The on-the-air reports agree. I will be glad to respond to any correspondence accompanied by an SASE.

Acknowledgement

I thank the following: From Eimac, Salt Lake City, for the technical assistance, Vern Campbell K7BYQ and Erwis Isgitt W7SLC; friends who listened and suggested, Max Burggraff WA7AIA and Phil Bullock W7VEO; John Lloyd, Jr. WA7GWU who helped with suggestions throughout construction and testing; Fred Roberts WA7NKS, neighbor and photographer. I especially appreciate the tolerance of wife and children because the mess in the playroom stayed for long periods of time between cleanups. ■

References

Burggraff, Max, "Big Signal — Good Looks," *73*, September 1969, 124-128.
Brown, Fred, "Tuned Choke Input," *CQ*, October 1967, 80.
Deane, William, 8831 Sovereign Rd., San Diego CA 92123.
Johnson, Neil, "Tuned Filter Chokes — The Easy Way," *73*, December 1969, 18-21.

"We Must Abandon Ship... Help..."

by
Albert Coya WB4SNC
1710 S.W. 83rd Ct.
Miami FL 33155

It was cold and windy, that New Year's Eve, also a "straight key night." I went down to the shack and took the old 50 Watts rig from the shelf. This transmitter was built by my uncle in the early 1930s. I remember the many hours I spent in his shack, trying to tell the dots from the dashes.

The strong smell of the bakelite fired my imagination. I removed the dust from the 46ers and looked around for the power supply. I wondered if the old rig still worked.

An exciting idea came to my mind. How about using this transmitter on *straight key night?* It certainly would be interesting to find out the kind of reports I would get from the fellows.

I found the power supply and plugged it in and then proceeded to check the voltages with the VTVM. To my surprise everything was okay. I found the crystals and sets of coils for 80 and 160m in a box. The 40m coils were already plugged in the rig.

I hooked up the power supply and one of the 40m crystals. Before turning on the rig I took my grid dip meter and tuned the stages to the crystal frequency, then I hooked my Cantenna to the output.

The great moment came. I fired up the rig! The filaments glowed with a pale reddish color. The ammeter has a plug, and jacks to check grid and plate current where installed in the front panel. I plugged my old brass key in the proper jack and used my receiver with the antenna disconnected to check if the rig was working. I keyed and tuned the plate to a 50 mA dip. I moved the receiver's dial until a loud note came from the speaker. It was working! The old son of a gun was working! I couldn't believe my ears! For the on the air test I had to improvise a primitive antenna switch. This task took me only twenty minutes, but it seemed like an eternity.

Finally, I was ready to go airborne. I listened in the crystal frequency, and fortunately it was clear. I didn't want to step into anybody's QSO without invitation, so, with trembling hand I sent a QRZ and my call letters. I was used to using a bug and fumbled badly with the straight key. Nobody answered. Then I launched my first CQ. By the time I signed K my fist was getting the old feeling of the straight key. I switched the antenna to the receiver and searched for a signal. Nothing, except some familiar QRN. After my third or fourth try there came an answer. I scribbled his call in my pad and proceeded to switch the antenna. It was a 4 call, so he was not too far, but who cared if he was just around the corner? The great thing was that somebody heard the old rig! I gave him the RST report and the routine stuff, switched the antenna and listened.

"Sorry OM but you have something that sounds like key clicks. Your RST is 569 with QRN. The clicks are not really bad and I hope you can fix it."

I told him the kind of rig I was using and that I was going to try to solve the problem. After signing out and wishing him a Happy New Year, my XYL came into the shack like a tornado: "You are messing up my TV.

You told me that would never happen again! Guy Lombardo has streaks all over his face!"

"But, honey bunch," I told her, "the old man has been playing with his band for quite a few New Year's Eves, and it's normal to have those wrinkles in his face. . .maybe he needs a face lift. . ." It was pretty lame.

"This is not the kind of wrinkle you can fix with silicone. . .maybe one of your funny looking filters. . ."

I knew she was right. So back to the old drawing board. With no shielding, and all the long leads scrambling like snakes over the wood board, the old rig was radiating all kinds of parasitic oscillations.

I wanted to work straight key night and I knew to dress those leads and fix the trouble would take hours. But I decided to do it. A couple of capacitors added to the filament of the oscillator tube and shortening the lead to the screen capacitor did the job. I was back on the air in less than an hour.

I switched to 80m and worked stations as far as New York. I was having a ball every time I told the fellows about the old rig. The clicks reported in my first QSO were almost nothing after placing a capacitor shunted by a resistor across the key contacts.

After signing out with a fellow in North Carolina I heard my letters being called. It was a very weak signal. I couldn't copy his call letters after I signed "QRZ?"

I plugged the "cans" and tried to retune the receiver. Holding the "cans" to my ears I heard my call letters again and broken words: ". . .are. . .danger. . . please. . .help. . .This is maritime mobile. . ."

The QRN was tremendous. I couldn't believe my ears. It had to be a prank. A ship in distress and calling in the ham bands? Impossible!

I banged the antenna switch in the transmitting position: "Where are you? The name of the ship, please?" I repeated the message a few times very slowly and signed "BK."

The answer came back, "Ship name is. . . bound for Cape of Good Hope. Position is. . .° West and. . .° South. We must aban-

don ship. . .five feet of water in the bilge. . .please contact. . . Guard. . ."

And the signal faded away. . .

I fumbled with the knobs trying to pick up the weak CW signal. The erratic dash and dots came back:

"He is beserk. . . will kill all of us. . ."

A burst of static whipped him off.

Holy Neptune! What was going on on that ship? Was he talking about the storm or a member of the crew?

Through the QRM the CW signal came back once more. "The skipper is dead . . . please call. . . that man is crazy. . . BK. . ."

I slammed the antenna switch to transmit. "The name of the ship and position again, please!" repeated the same many times, signing my letters and K.

"Position is . . . °South . . . name of the ship is 'Flying Dutchman' . . ."

The "Flying Dutchman"? Somebody must be pulling my leg. Or was it a real ship whose owners had had the bad taste to name their ship after that legendary ghost?

Again and again I tried to contact my evasive operator without success.

I went to bed and the lights of the New Year found me with my eyes open, looking at the ceiling. Had to be a prank, I told myself . . . ■

ADVERTISER INDEX

propagation

by
J. H. Nelson

Open = Good ○ = Poor □ = Fair

DECEMBER

	$\boxed{1}$	2	3	4	$\boxed{5}$	6
7	8	$\boxed{9}$	10	11	12	13
14	$\boxed{15}$	$\boxed{16}$	$\boxed{17}$	$\boxed{18}$	19	20
21	$\boxed{22}$	23	24	25	26	$\boxed{27}$
$\boxed{28}$	29	$\boxed{30}$	$\boxed{31}$			

JANUARY '76

				$\boxed{1}$	2	3
$\boxed{4}$	$\boxed{5}$	$\boxed{6}$	$\boxed{7}$	8	$\boxed{9}$	10
11	12	13	14	15	16	17
18	19	20	21	22	23	24
$\boxed{25}$	26	27	28	$\boxed{29}$	$\boxed{30}$	$\boxed{31}$

January 19-24: Possible aurora.

EASTERN UNITED STATES TO: (December)

GMT:	00	02	04	06	08	10	12	14	16	18	20	22
ALASKA	7	7	7	3	3	3	3	3	7	14	14	14
ARGENTINA	7	7	7	7	7	7	14	14	14A	14A	14A	14
AUSTRALIA	14	7B	7B	7B	7	7	3B	7	14	14	14	14
CANAL ZONE	7	7	7	7	7	3A	7A	14	21	21	14	14
ENGLAND	3A	7	7	3	7	7	7A	14	14A	14	7	3A
HAWAII	14	7B	7	3	7	7	3	3	7B	14	14A	14A
INDIA	3B	7	7B	7B	7B	7B	7B	14	7B	7B	7B	7
JAPAN	14B	7B	7B	7	7	3	3	7	7B	7B	7B	14B
MEXICO	14	7	7	7	7	7	7	14	14	14A	14A	14
PHILIPPINES	7A	7B	7B	3B	7B	3B	3	7	7	7B	3B	7
PUERTO RICO	7	7	3	3	3	3	7A	14	14	14	14	14
SOUTH AFRICA	7	7	7	7	7B	7B	14	14A	21	21	14	14
U.S.S.R.	7	7	3	3	7	7B	7B	14	14	7B	3A	3A
WEST COAST	14	7	7	3A	7	7	7	7A	14	14A	14A	14

CENTRAL UNITED STATES TO: (December)

GMT:	00	02	04	06	08	10	12	14	16	18	20	22
ALASKA	14	7	7	3	3	3	3	3	7	14	14	14
ARGENTINA	14	7	7	7	7	7	7	14	14	14A	14A	14
AUSTRALIA	21	7B	7B	7B	7	7	3B	7	14	14	14	14
CANAL ZONE	14	7	7	7	7	7	7	14	21	21	14	14
ENGLAND	3	7	7	3	7	7	7	14	14	14	7B	3B
HAWAII	14	7	7	3	3	7	3	3	7	14	14A	14A
INDIA	7A	7A	7B	3B	7B	7B	3	7	7	7B	7B	7B
JAPAN	14	7B	7B	3B	3	3	3	3	7	7B	7B	14
MEXICO	7A	7	3	3	3	3	3	7	14	14	14	14
PHILIPPINES	14	7B	7B	3B	3B	3	3	3	7	7	7B	7A
PUERTO RICO	7A	7	7	7	7	7	7	14	14A	14A	14	14
SOUTH AFRICA	7A	7	7	7	7B	7B	7B	14	14A	14A	14	14
U.S.S.R.	7	7	3	3	7	7	7B	14	7B	7B	7B	3A

WESTERN UNITED STATES TO: (December)

GMT:	00	02	04	06	08	10	12	14	16	18	20	22
ALASKA	14	7	7	3	3	3	3	3	7	7A	14	14
ARGENTINA	14	7	7	7	7	7	7	14	14	14	14A	14A
AUSTRALIA	14A	14	14	7B	7	7	7	3B	7	14	14	14
CANAL ZONE	14	7	7	7	7	7	3A	14	14	21	21	14
ENGLAND	3B	7	7	3	7	7	3B	7B	14	14B	7B	3B
HAWAII	14A	14	7	7	7	7	3	3	7	14	21	21
INDIA	7B	14B	7B	3B	3B	7B	3	3	7	7	7B	3B
JAPAN	14A	14	7B	3	3	3	3	3	7	7	7B	14
MEXICO	14	7	7	3	7	7	3	7	14	14A	14A	14
PHILIPPINES	14A	14	7B	3B	3B	3	3	3	7	7	7B	14
PUERTO RICO	14	7	7	7	7	7	7	14	14	14A	14A	14
SOUTH AFRICA	14	7	7	3	7	7B	7B	7B	14	14A	14	14
U.S.S.R.	7B	7	3	3	3	7	3B	3B	7	7B	7B	7B
EAST COAST	14	7	7	3A	7	7	7	7A	14	14A	14A	14

EASTERN UNITED STATES TO: (January)

GMT:	00	02	04	06	08	10	12	14	16	18	20
ALASKA	7	7	7	3	3	3	3	3	7	7A	14
ARGENTINA	7	7B	7B	7	7	7	14	14	14	14	14A
AUSTRALIA	14	7B	7B	3B	7	7	3B	7	14	14	14
CANAL ZONE	7	7	7	7	7	7	7	14	14A	14A	14
ENGLAND	3A	3	3	3	3	3	7	14	14A	14	7
HAWAII	14	7B	7	3	3	3	3	3	7B	14	14A
INDIA	3	3	3B	3B	3B	3B	7	14	7B	7B	3B
JAPAN	14	7B	7B	3B	3	3	3	3	3B	3B	7
MEXICO	14	7	7	7	7	7	7	14	14	14	14A
PHILIPPINES	7A	7B	3B	3B	3B	3	3	7	7	7B	3B
PUERTO RICO	7	3	3	3	3	3	7	14	14	14	14
SOUTH AFRICA	7	7	3	3A	3	7B	14	14A	14A	14	14
U.S.S.R.	3	3	3	3	3	3B	7	14	7A	7B	3B
WEST COAST	14	7	7	3	7	7	3	7	14	14A	14A

CENTRAL UNITED STATES TO: (January)

GMT:	00	02	04	06	08	10	12	14	16	18	20
ALASKA	14	7	7	3	3	3	3	3	7	7A	14
ARGENTINA	14	7B	7B	7	7	7	7B	14	14	14	14A
AUSTRALIA	14	14	7B	3B	7	7	3B	7	14	14	14
CANAL ZONE	14	7	7	7	7	7	7	14	14A	14A	14A
ENGLAND	3	3	3	3	3	3	3A	14	14	14	7B
HAWAII	14	7B	7	3	3	3	3	3	7	14	14A
INDIA	3	7	3B	3B	3B	3B	3	7	7A	7	3B
JAPAN	14	7B	7B	3	3	3	3	3	3	3B	7
MEXICO	7A	7	3	3	3	3	3	7	14	14	14
PHILIPPINES	14	7B	3B	3B	3B	3	3	3	7	7	3B
PUERTO RICO	14	7	7	7	7	3	7	14	14	14A	14A
SOUTH AFRICA	7A	7	3	3	3B	3B	7B	14	14A	14	14
U.S.S.R.	3	3	3	3	3	3B	3B	7A	7A	7B	3B

WESTERN UNITED STATES TO: (January)

GMT:	00	02	04	06	08	10	12	14	16	18	20
ALASKA	14	7	7	3	3	3	3	3	7	7A	14
ARGENTINA	14	7B	7B	7	7	7	3B	7B	14	14	14
AUSTRALIA	14	14A	14	7B	7	3B	3B	3B	7	7A	14
CANAL ZONE	14	7	7	7	7	7	7	7A	14	14A	14A
ENGLAND	3B	3	3	3	3	3	3B	7B	14	14	7B
HAWAII	14A	14	7A	7	3	3	3A	3	7	14	21
INDIA	14	14	3B	3B	3B	3B	3B	3	7	7	3B
JAPAN	14	14	7B	3	3	3	3	3	3A	3A	7
MEXICO	14	7	3	3	3	3	3	7	14	14	14A
PHILIPPINES	14	14	7B	3B	3B	3	3	3	7	7	7B
PUERTO RICO	14	7	7	3	3	3	3	7A	14	14A	14A
SOUTH AFRICA	14	7	3	3	3	3	3B	7B	14A	14A	14
U.S.S.R.	3	3	3	3	3	3B	3B	3	7A	7	3B
EAST COAST	14	7	7	3	7	7	3	7	14	14A	14A

A = Next higher frequency may be useful also.
B = Difficult circuit this period.

73

FEBRUARY 1976
$1.50

Devoted Pretty Much to AMATEUR RADIO

- *Glitchgate*
- *Make Photo PCs*
- *Mobile Ammeter*
- *2m Preamp*

MUCH, MUCH MORE
. . . MUCH

BUILD THIS STAR TREK COMMUNICATOR

- Sound of Random Numbers
- ASCII - Baudot
- RTTY Autocall
- Three Decimal Counter
- Visit to MITS, SPHERE and SW TECH

WITH I/O

MICROPROCESSOR SECTION!

10

17

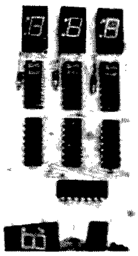

66

86

73 amateur radio

#184 FEB 1976

73 Magazine (where the action is) is published monthly by 73, Inc., Peterborough NH 03458 (a good place to live). Subscription rates are a ridiculously low $10 for one year worldwide, $17 for two years, and $20 for three years (the buy of the year?). Second class postage paid at Peterborough NH 03458 and at additional mailing offices. Phone: 603-924-3873 (hey, don't call much after 4:30 pm EST, okay?). Microfilm edition – University Microfilms, Ann Arbor MI 48106. Tapes – Science for the Blind, 332 Rock Hill Rd, Bala Cynwyd PA 19904. Say, fine print readers, 73 is growing rapidly and sure could use a couple more active hams who are technically ept and maybe can write. You won't find a much more fun place to work . . . and money isn't everything, right?

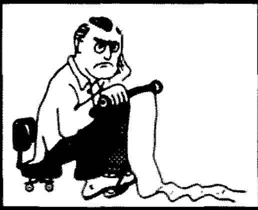

NEVER SAY DIE

...de W2NSD/1

EDITORIAL BY WAYNE GREEN

ANY PUBLICITY IS GOOD PUBLICITY

So the saying goes, anyway . . . just be sure to spell my name right. Apropos of the bum dope spread by jealous competitors re the bonus November/December issue of *73*, which 256-pager came as a terrible shock to other publishers . . . heh, heh.

One club bulletin editor and two readers got so unnerved over the reported rip-off by *73* that they wrote about it. The only rip-off was the spurious report that subscribers might get only eleven issues for the year.

When it became obvious that nothing was going to stop ARRL in its madness in going to the larger format for *QST* . . . and that their satellite was also going to make the change, we said what the hell, it makes no sense from any standpoint, but if that's the size ads are going to be, then *73* has to fit the ads or else *73* is out of biz. Okay, as long as we're going to change size, why not get the jump on our slower compatriots and come out in December with the first large magazine and drive them crazy.

The first plan was to have the November and December issues of *73* on their regular schedule and at the old size, but come out with a special bonus issue in between the other two in the large size . . . a "Shape of Things to Come" issue. The ad department started selling the idea to advertisers and before long we found ourselves way over our heads in magazine. Our staff had more work than they could handle, with three big issues coming out at two week intervals. My solution to the jam-up was to put the November and December issues together and make that one issue. This would fill out the binders with the old smaller size magazine. The "Shape" issue would then be the January issue, but would come out on the December issue schedule.

Even so, the work was enough to put the November/December issue about a week behind its schedule and the January Giant issue two weeks behind. We'll catch up in a couple of months if we don't think up any new ideas for big issues and get the ad department triggered into a selling spree again. The more ads, the bigger the magazine, obviously.

My plan to call the January issue a December/January issue just to further confuse everyone was vetoed. Spoil sports.

WHERE COMPUTERS ARE AT

Those readers of *73* who are into microcomputers are in on the ground floor of something new and exciting. I don't think many people realize how incredibly new the low cost computer field actually is . . . in point of fact it just got started in 1975 with the introduction of the MITS Altair 8800 processor.

By way of comparison, a computer system which might have cost $1,000,000 in 1970 was down to about $100,000 by 1974 by virtue of the application of ICs to computers. These medium priced systems were called minicomputers . . . they were mini in size, but their capability wasn't much different from most of the earlier maxis. Then came the computers-on-a-chip . . . the Intel 4004, the National IMP-16, the Intel 8008, the 4040 . . . and finally the Intel 8080. Motorola came up with the M6800, Fairchild with the F8, National with their PACE, General Instrument with a C1600, and MOS Technology with the 6501.

The micro chips revolutionized the computer industry again, resulting in the microcomputer or microprocessor, as it is often called. As with the mini, only the name and size had changed . . . the job these micros could handle were about the same as the bigger computers . . . but now the price for a system had dropped from $100,000 to about $10,000.

Have we reached the end of this progression? Not by any means. The chip people are still busily at it, designing cheaper and cheaper microprocessors . . . the latest is the $25 6501 chip which is a direct replacement for the much more expensive M6800 . . . and, as engineering costs are amortized, we can look for these costs to drop further.

The cost of peripherals will also drop as firms gear up for mass production of interface and control chips which will replace the IC-laden circuit boards of today. One-chip video display generators will probably bring the cost of the video keyboard down to the $100 range . . . like a black and white television . . . though that may take three or four years. Right now anyone that comes out with a $400 video keyboard will make millions of dollars . . . until the $350 unit comes out.

None of the present day tape storage systems are ideal for small computer systems and the race is on to invent a mass memory storage system which is geared to the low cost computer. Small businesses and homes don't need very large storage systems, nor do they need lightning fast service, so a tape system which would allow you to get your data in a few seconds would cut the mustard . . . a good trade off against price.

There are fantastic opportunities in the small computer market for making large gobs of money. There will probably be more computers sold in the next year than there are in existence in the world today . . . and maybe five to ten times that many in the next year. The hobbyist of today who gets to know the field and is able to take advantage of what he knows could be the mogul of tomorrow.

By way of getting used to how early we are in the field, as of late summer 1975, to my knowledge, even MITS had not yet started shipping complete computer systems with floppy disk operating units . . . they were close to it. Remember that MITS, as of this date, was the *only* supplier of micro systems in the country. Several others were about ready to go. By the time this reaches print I expect that there will be at least three, perhaps four, firms supplying operating microcomputer systems . . . hopefully with working floppy disk memories. Floppies will have to hold until one of the mentioned tape systems is invented. Floppies are okay . . . a little limited in capacity . . . and expensive by hobby standards . . . $1000 to $2000 range.

HAMMING IT UP ON COMPUTERS

How will we be using computers in amateur radio? Will they further reduce the quality of contacts, making them even more mechanical than today . . . if that is possible?

I realize that it is popular to bad mouth developments such as this, but the fact is that my experience indicates that it may well be that amateur radio never had it so good. Those of us who have delved into radio Teletype communications are not unaware of the fascination that this mode holds. We also are probably aware of some of the reasons for the excitement and fun of RTTY as compared to CW and SSB.

There are some basic problems involved with radiotelephone communications to which we have given too little consideration. After spending our childhood years learning

how to talk with people we can see and hear . . . getting feedback from them as we talk in the way of grunts, yesses, nods, etc., and even getting these during telephone conversations . . . we are unprepared to handle the prospect of talking to someone we can neither hear nor see. We are at a loss for words . . . known as mike fright in beginners . . . known as incredibly boring contacts and deadly routines in older timers . . . the 10-4 of the CBers . . . the endless repetitions of some amateurs . . . the meaningless descriptions of stations, weather, and such.

Most of your life patterns are well set by the time you are five, and that includes your ability to talk to people you can't see or hear. The result is that the brain boggles and rational conversation is virtually impossible. This may explain the difference between talking to hams in person and trying to work up anything more than an exchange of pleasantries over the air.

With RTTY we find that we have a lot more time to engage the brain and give some thought to what we are trying to say. The result is that in general our communications are a lot more interesting . . . more like a series of letters being exchanged than talking. It is just possible that amateurs using computers for contact would go this route. They probably would even go one step further and keep a tape of their better efforts so they would be available during later contacts.

Just imagine what an interesting story you could work up for a contact about a recent trip . . . a DXpedition . . . or some good DX worked . . . some adventures in putting up your tower . . . stories about how a beam works . . . you could put real life into your contacts.

Let's move the clock ahead and imagine a contact in 1978 . . . it is not your computer working his computer, but it is something like that. You would get in touch and your screen would have the hello and a list of some things you might be interested in talking about . . . perhaps a list of some things you might be interested in talking about . . . perhaps a list of some stories he has on tap for you. You give an okay to the tower story and immediately your screen comes up with the tale of how he read about this tower . . . got the parts to build it . . . got it all together and then couldn't get it raised! Your screen, when you give the keyboard a "go" gives you a couple pictures of the chap and his friends trying to raise the tower on slow scan. Then more story when you give him another "go."

Does your friend have to sit there and wait while you do all this? No, of course not . . . he has gotten the same type of stuff from your system and is busy watching the story and pictures you have on tap for him.

Won't all this take up a lot of the band? Probably not . . . the chances are that hundreds of contacts will be carried on in short bursts on a single channel . . . possibly with a fixed frequency receiver . . . or it may come down to several fixed channels such as on FM today.

On the other hand, it might not work out like that at all . . . but it could.

COMPUTERMANIA

Despite a whole lot of effort, I am still an utter neophyte in the computer field. I want to establish that before I tell you about computers. Okay?

Now that I am no longer involved with *BYTE* magazine, but still haven't lost my enthusiasm for computers and their future in Amateur Radio, I'd like to do everything I can to encourage them's as what knows to write for us'n's which wants to know . . . for *73*.

Now before you start to write, you computer expert, you . . . I want to lay on you a little thought . . . the great unwashed of us out here don't even speak your language yet. We don't know a compiler from an assembler. Oh, we really want to know and we're looking for you to explain the whole works to us in simple terms which we can understand, not in computer jargon. Just take a look at the beautiful job Larry Kahaner has been doing in explaining the basics of digital design and you'll get the idea of what we need.

We want to know about computer design, ham applications of computers, the differences between the various systems such as the 8080 based processors, the 6800 based, PACE based, etc. Sure, we know that in the end all of them will do just about anything we want them to, but we also want to try and understand what the differences are and what these differences mean to us.

We want to know about how to use our teletype machines . . . our television typewriters . . . our cassette recorders . . . how to interface other computer equipment and use it . . . how good or bad some of the new hobby computer equipment is and what we can or can't do with it . . . stuff like that.

We want to get a general idea of what the major computer languages mean, why which are used and when, which we should learn and why, and so forth. We want to have an understanding of what people mean when they refer to Fortran, to Basic, to Cobol, to RPG, to PL, and other common program languages.

We want to be able to hook up computer systems and use them . . . for games . . . for hamming . . . perhaps for printing out the schedule of Oscar 7 or the times of possible acquisition of Oscar for active Oscarites . . . moonbouncers want to know where the moon is or even have a computer point their antenna . . . and who of us would not like to be able to keep track of all our ham contacts in a computer system?

We want to know where we can get programs for use in our computers, from the simpler systems such as the HP-65 on up to Altair 8800, Sphere 6800, SWTPC 6800, Godbout PACE, etc. The hobby computer field shows no sign of slowing in its growth.

So there you have it . . . we need articles. Writing for *73* is simple . . . double space type it with generous margins, a sketch of diagrams will do (but be very careful to include everything possible), and the best photos possible. If you have trouble with photos send the stuff here and we'll take 'em. If you have a source of PC boards for construction projects be sure to let the readers know . . . if not we'll try to find one. We also like to have a negative of PC boards available for interested readers if possible.

The best part, perhaps, is that we pay and pay generously for articles. Not only are you able to share your work with others and bring them fun and happiness, you also get paid . . . and you get well known, too. Ask Pete Stark and other regular *73* authors about that! If publishing will help you in your work or to get a better job, this is a good medium. Of the ham magazines which pay for material, *73* has by a wide margin the largest circulation, no matter what you may have read in the way of half-truths (well, 39.5% truths) elsewhere. You want your articles to get the widest distribution, don't you?

Get busy, then, and teach us something about computers . . . and try to remember what it was like to not know computer language when you write for us.

I/O

Articles on digital techniques and microcomputers will be identified in *73* from now on (see page 52) with an I/O mark . . . this means Input-Output. A computer can't do anything unless there is something feeding it input . . . and there is something for it to feed output to. It seems like a nice digital type term.

Continued on page 15

LETTERS

On Your Marker

I have been etching my own circuit boards for quite a few months now and really enjoy it.

Since my boards are for one-of-a-kind projects, I have been using Datak's dry transfer etch resist. However, there are times when a pen would be handy for large areas or long lines. I purchased an etch resist pen and was very unhappy with the results. I decided to conduct an experiment to determine the best pen for this purpose. The results are surprising. Here are the results with the best listed first and the worst listed last:

1. El Marko Permanent Marker
2. ADI Ink Marker
3. Archer Etch Resist Lacquer
4. Carter's Marks-A-Lot
5. GC Electronics etch resist pen
6. Eagle Marker

The Lacquer is not a pen but a bottle with brush, and is hard to use.

Another interesting factor is that the number 1 and 2 markers are less than half the price of the etch resist pen and are readily available in most discount stores.

Barry N. Shiffrin WB2FPG
Endicott NY

S-40 Search

I am looking for a schematic on a Hallicrafter Model S-40 receiver. Even the specs on the main power transformer would help.

Mike Turner
PO Box 85
Fletcher NC 28732

Help Clearinghouse

I note the apparent contradiction between those who are experiencing difficulty in finding assistance in obtaining an amateur license and those who are only too happy to provide this needed assistance. From this situation, the need for these two groups to get together becomes quite clear. Why not start a sort of clearinghouse of names of clubs and individuals who are willing to provide assistance? A prospective amateur would only need to call or write this clearinghouse, which would see to it that he was contacted by a local ham/club for assistance. In reality this should be a function of the ARRL, but it is quite apparent they have not fulfilled this need. This would be an ideal function for some club to provide. In the meantime, I would like to volunteer my services to function in this role. Any individual/club who is willing to serve as a helper, anywhere in the country, is welcomed to call or write me to start a list. Any potential amateurs are also welcomed to contact me and I will strive to find someone to provide assistance to you.

Dennis M. Brown WA3URT
R#1 Box 136B
Lebanon PA 17042
717-949-2316

Good Godbout!

I want to tell you about one of your advertisers . . . Bill Godbout . . . great! Some time ago I ordered some parts from him, and would you believe I got 1 week delivery? That's what I call service. You always hear about the "bad" guys – I just wanted to let you know about a "good" one.

Chuck Young WB8TDW
Waverly OH

Rich? – or Crazy?

My November/December issue arrived a few days ago and I haven't put it down since. My mouth was hanging in disbelief as I read WØSYK's account of his antenna system. It must be nice to be rich – or is it just crazy? – hi.

I also enjoyed W1BNN's article about his Germany days. I *always* enjoy the old timers' stories or any story about an unusual occurrence – particularly involving ham radio. I think it is great that *73* encourages this type of writing, as I find it a very enjoyable interlude from some of the monotonous technical articles found in some of the other mags.

Well, keep up the good stuff!

Mark Morgida WA1SSW
Billerica MA

CU on 20

I would like some information about, or to see published, an article on curing the interference from the 15 kHz sweep circuits in TV sets. This gets really strong in ham receivers on the 160 and 8 meter bands.

Also, how about an article on how to build a battery-operated QRM locator, using loop antenna (omnidirectional), with meter, so a person could go directly to the noise source? Have *73* from the first issue, and always enjoy it. CU on 20.

Glenn Lay W7ADS
Yakima WA

At the Forefront

I'm grateful to *73 Magazine* for being 100% behind its products. I had some trouble with a 20 wpm code tape, wrote and requested that it be replaced, and two weeks later I received a replacement.

Services such as this will keep *73 Magazine* at the forefront. Thank you.

Jeffry M. Blackmon WB2UYI
North Tonawanda NY

HP-45 Fun (Cont.)

I am writing in regard to another letter which appeared in the Letters column of the October issue of *73*. It is entitled HP-45 Fun from Sig Peterson III of Portland, Oregon.

The time indicated by the HP-45 is NOT accurate. On the HP-45 I own, the timer indicates 52 seconds after 60 seconds have elapsed. This has been verified by checking against several different clocks, both electrically timed by the generators and by quartz crystals (which are in use here on the radar site), and by checking with WWVH.

This has presented no major problem as the 8 second error is constant and, as long as I can remember the error, I have been able to use my HP-45 as an elapsed time indicator.

There is another set of presets which do the same thing. They are as follows:

1. Press the "RCL" button.
2. Simultaneously press 3 keys: "R ↓", "STO", and "CHS". After obtaining the display as shown in Mr. Peterson's letter, the remainder of the operations are the same as shown in the letter.

As I work with several engineering types here in the radio shop, and the White Alice Communications System section, I was able to borrow an HP-35 and an HP-55 to try these programs on. Neither of the other calculators will duplicate the function.

The HP-XX series of calculators are

Continued on page 74

be my guest

visiting views from around the world

The Time Has Come

The expansion of the phone bands has been discussed many times in the past, but very little or nothing has been done to change things around. We have today more or less the same distribution of segments for CW and phone that we had forty years ago. In the last decades, ham radio experiments and advances have caused an extraordinary transformation. To mention a few: SSB, FM, VHF, UHF, RTTY, ATV, SSTV, facsimile, satellites, moonbounce, etc., etc.

With all these modes and fields to research and experiment, the spectrum of the bands has remained the same as when CW and AM were the prime modes of communications.

The time has come for a complete overhauling and restructuring of the ham bands. We are a technology-oriented group and it is natural that we must cope with this problem in a technological way. It is very simple to feed an appropriate computer with all the data and information on the number of hams, modes of operation, percentage of time on the air, most used bands and frequencies, traffic handling, foreign reciprocal licensees and their operation habits, etc., and we can come out with a plan for the appropriate distribution of band space. You can allocate ten CW signals on the same space as one SSB, and logistically the CW segment in the bands only needs to be a fraction of the space for SSB. RTTY with narrow shift is another mode that does not take too much space.

If you take a good look at the 20 meter band, one of the most popular and crowded, you will find that American amateurs (Advanced and Extra) can work phone only from 14.200 to 14.350 (150 kHz), while the spectrum for CW is from 14.000 to 14.350 for Extras and 14.025 to 14.350 for Advanced and General. That means that you can work the whole band on CW, but only a fraction on phone. Why this strange rule if only a small fraction of active hams work CW?

I am a CW man myself, I have an Extra ticket, and think that CW is one of the greatest and sure forms of communication, but I am not a fanatic and like to live with reality.

Somebody told me that the reason for the phone band limitation was an old international agreement so we don't QRM the DX stations with our powerful linears. I think decades ago this was a very gracious gesture by the American hams to their colleagues abroad. But the situation has changed dramatically. Today these fellows are using full gallons, and in America we have thousands of reciprocal licensees that devote their time to phone patching and handling traffic for their countrymen in the USA. I am not against the reciprocal licensing. I think it is wonderful. The only trouble is that this traffic is jamming our narrow phone bands precisely in the lower sectors. Please, take the trouble to tune the 20 meter band from 14.200 to 14.250 and you will hear the traffic going on.

But here is what happens when you need traffic for Cucamanga. You heard a station on 14.155 broadcasting from Cucamanga, but you couldn't call the gentleman and ask him to phone patch Aunt Myrtle, because American hams are not allowed to work phone under 14.200. You can't even call them in CW, because most do not know code. Now, on the other hand, when the gentleman in Cucamanga needed Miami, the only thing he had to do is come over the 14.200 and ask us to phone patch Aunt Juanita. And we generally do it. Noblesse oblige.

I don't think this is a fair situation. And I don't believe that it is reciprocal and just.

We've come a long way. Ham radio is not spark gap anymore. The tremendous strides in technology, the diversification of modes, the advance of the state of the art, call for a fast revision of band allocations and the time to do this is here, NOW.

Albert H. Coya WB4SNC
Miami FL

Sweet Mystery of Life

As it may come to any neighborhood, scandal trailed across the ridges recently and one of the local QRPers ran off with a young widow to live in idyllic bliss high in the ranges. Finally, one of the local QRPers had to look them up, and he came back with the sad report.

"It sure is something," the QRPer reported. "Here he gets up every morning at the break of day to watch the sunrise and his bellowing of 'Ah, Sweet Mystery of Life at Last I've Found You' goes echoing through the canyons. How do you figure these things happen to a fine fellow? How do they happen?"

We had to admit that we had felt some concern over these events and finally had to ask the inevitable. "Do you think he's happy?" we said, and the QRPer snorted.

"How could anyone be happy," he said, "standing outside in the morning sunrise and yelling, 'Oh, now I know the secret of it all'? And all this time the morning DX path will be fading and he has missed all the DX again. How could one be happy with that?"

Son of a Gun, we had to admit that he had a point there.

* * * * *

Last week we came across another one of the local QRpers and we just had to ask how he had done in the recent DX Test. Maybe we should have talked of other things: It was not joy that crossed the face of the QRPer, and we had to listen to his story.

"I figured that in this contest I would aim for new countries," he explained, "and I latched on to one that I needed early in the test. But I called and called and called. And I never did work him, I never worked him at all."

The QRPer paused under the weight of the emotions that raged within, but finally he pulled himself together and was able to continue. "I never did work this fellow I was calling. I never got him to come back to my call. Chased him for the whole weekend but things just did not work out."

We were properly sympathetic, for we also have known the lonely nights of frustrated DXing. "Who were you calling?" we asked, and that was another mistake.

The QRPer shrugged. "UP2KHZ was the station I needed," he mumbled. "He kept giving his call and I kept calling him all weekend but I never did work that Lithuanian. The first UP2 I've heard in years. The first in years."

You know something? We thought this over for a bit, but what could one say in a situation like this. Only that often the chase is long and the quarry elusive. And sometimes one will chase one thing while thinking it is something else. And wishing to take from no man his dream, we said nothing at all.

Give not your sympathy to the chaser of the elusive UP2s, he was not the first to hear the call . . . once there was a UFØOL on Franz Josef . . .

Reprinted from the West Coast DX Bulletin.

CONTESTS

Editor:
Robert Baker WA1SCX
34 White Pine Drive
Littleton MA 01460

WATT Award

TIARA is now offering an award for working ten TIARA members within a year, beginning August 1975. Five of the ten members must be non-Japan stations. Send a self-addressed envelope with sufficient IRCs to TIARA, 22-5 Oyama-cho, Shibuya-ku, Tokyo 151, Japan, for a list of call-signs to look for. QSLs and 500 Yen (or equivalent) should be sent to JA1ADN, Fred N. Ihara, of *CQ Magazine/Japan.* His home address is: 8 - 4 Tokyu, Matoba, Kawagoe 350 Japan.

STRAIGHT KEY NIGHT

Starts: 0100 GMT Thursday, January 1, 1976
Ends: 0700 GMT Thursday, January 1, 1976
(Remember, this is actually Wednesday, December 31 local time.)

Suggested frequencies are the areas of 060 to 080 kHz up from the bottom edge of the band on 80-40-20, 10 kHz up from the bottom edge of the Novice segments. Work CW only using a straight key. Bugs, keyers, CW keyboards, etc., are not allowed. Use "SKN" in place of "RST" when exchanging signal reports.

REPORTS:
Immediately following straight key night, send a list of the calls of the stations worked along with your vote for the best fist heard that night (you don't have to work him). Send to: American Radio Relay League, 225 Main Street, Newington CT 06111.

Check the December issue of QST *for any last minute changes in the contest rules.*

CALENDAR

Jan 1	Straight Key Night
Jan 3 - 4	ARRL VHF Sweepstakes
Jan 10 - 11	CD Party – CW
Jan 14 - 15	DX-YL to NA-YL Contest – CW
Jan 17 - 18	CD Party – Phone
Jan 17 - 18	QRP – Winter – Contest
Jan 24 - 25	Simulated Emergency Test
Jan 28 - 29	DX-YL to NA-YL Contest – Phone
Jan 31 - Feb 1	French Contest – CW
Feb 7 - 8	ARRL DX Contest – Phone
Feb 13 - 15	QCWA QSO Party
Feb 14 - 15	10-10 Net Winter QSO Party
Feb 21 - 22	ARRL DX Contest – CW
Feb 21 - 22	YL-OM Contest – Phone
Feb 28 - 29	French Contest – Phone
Mar 6 - 7	ARRL DX Contest – Phone
Mar 6 - 7	YL-OM Contest – CW
Mar 14 - 15	South Dakota QSO Party*
Mar 20 - 21	ARRL DX Contest – CW
Apr 3 - 4	Florida QSO Party
May 1 - 2	Helvetia 22 Contest (H22)
June 4 - 7	IARS/CHC/FHC/HTH QSO Party
June 26 - 27	ARRL Field Day
July 3 - 4	QRP – Summer – Contest
Aug 14 - 15	European DX Contest – CW
Sept 11 - 12	European DX Contest – Phone
Nov 5 - 8	IARS/CHC/FHC/HTH QSO Party
Nov 13 - 14	European DX Contest – RTTY
Nov 14	OK DX Contest

*Please note the change in date for this contest.

If you have any information on a contest that is not listed, please let me know as soon as possible, and preferably at least three months prior to the contest date.

ARRL VHF SWEEPSTAKES

Starts: 1400 Your Local Time, Saturday, January 3, 1976
Ends: 2400 Your Local Time, Sunday, January 4, 1976

Complete rules for the 29th VHF Sweepstakes can be found in the December issue of *QST* (please check for any last minute changes in the rules). Briefly, the rules are as follows:

All amateurs operating on or above 50 MHz are invited to participate. Contacts between stations in different time zones can be counted only when the contest period is in progress in both zones. Foreign stations may only work stations in ARRL sections. Crossband work is not allowed as well as retransmitted signals (repeaters). Contacts with aircraft mobiles cannot count for section multipliers.

EXCHANGE:
QSO Number, precedence (A = less than 50 Watts input power), your call, CK = last 2 digits of year first licensed, ARRL section or country.

SCORING:
Score one point for each exchange sent and each received (max. 2 points per QSO). Each section counts as a multiplier only once regardless of band and no more than one foreign country may be claimed as a section multiplier. Yukon-NWT counts as a separate multiplier. Final score is the total number of QSO points times the total number of sections plus 10.

LOGS:
Official logs may be obtained from ARRL. Send contest logs and summary sheet to: ARRL, 225 Main Street, Newington CT 06111.

DX-YL to NA-YL CONTEST

CW
Starts: 1800 GMT Wednesday, January 14, 1976
Ends: 1800 GMT Thursday, January 15, 1976

Phone
Starts: 1800 GMT Wednesday, January 28, 1976
Ends: 1800 GMT Thursday, January 29, 1976

Sponsored by the YLRL, the contest is open to all licensed *YL* operators throughout the world. Contacts with OMs and net contacts do not count. General call is "CQ DX YL." All bands may be used but no crossband operation is allowed. Stations may be worked and counted once on each band and mode. Phone and CW contacts will be scored as separate contests, so submit separate logs.

EXCHANGE:
QSO number, RS(T), country or state.

SCORING:
Each QSO counts one point. Multiply the number of QSOs by the number of states or countries worked. If running 150 Watts input or less on CW and 300 Watts PEP or less on phone, multiply the total score by 1.25 (low power mult.). Your logs must show the input power you are running.

LEGAL CONTACTS:
DX-YLs will include Hawaii and may contact all of the North American continent which includes the states and Canadian provinces. Alaska YLs will be counted as DX but may not contact the Western Canadian provinces of VE5, VE6, VE7 and VE8. Alaskan YLs may contact Hawaii, the states, or the Eastern Canadian provinces. Contestants in the North American area may score contacts with DX stations, including Hawaii and Alaska (except as noted above). The Western Canadian provinces VE5 through VE8 may not contact or count Alaska as DX.

LOGS:
Entries in logs must show band worked at time of contact, time, date and transmitting power. Please print or type and use separate logs for phone or CW. Copies of all logs showing claimed scores and signed by the operator must be postmarked not later than February 5, 1976 and received by the contest manager not later than February 19, 1976, or be disqualified. Send logs to: YLRL Vice President, Beth Newlin WA7FFG, 826 W. Prince Rd. – 06, Tucson AZ 85705.

AWARDS:
Trophies will be awarded to the first place winner in each category, a plaque to the highest combined DX and NA scores, and certificates to the second and third place DX and NA winners.

QRP-WINTER-CONTEST

Starts: 1500 GMT Saturday, January 17, 1976

Ends: 1500 GMT Sunday,
January 18, 1976

The contest is organized by the DL Activity Group-CW. Work 15 hours maximum during the 24 hour contest period, with no more than two pause periods. Select up to 5 bands from 160 to 10 meters. General call is "CQ QRP TEST." A station is not handicapped if CO/VXO control *and* VFO control are used on the same band or the input power of a commercial rig is reduced to below 2.5 Watts. QRO stations – same rules, but work only QRP stations and sign as ". . ./QRO"; scoring is the same.

EXCHANGE:
RST, QSO number, and input (1 to 9). Add "x" if transmitter is CO or VXO-controlled. Example: 579 005/8x.

SCORING:
QSOs with all stations are valid unless running QRO, then only QSOs with QRP stations count. Contacts with your own country count 1 point, own continent = 2 points, DX = 3 points, and score 3 additional points for a QSO with another QRP station (4-6 pts.). Score additional handicaps as follows: 1 handicap point for each station using below 3.5 Watts input or crystal controlled transmitter. Maximum handicap is 4 for any QSO. Both stations multiply QSO points times the handicap points plus one (QSO pts. x 5 max.) to find total QSO points for that contact. Multipliers are as follows: own continent = 1, DX = 2 points per band and country according to the latest DXCC list, but call areas in JA, PY, VE, VK, W and ZS count extra. Final score is total QSO points (including handicap pts.) times the total multiplier.

LOGS:
Send entry including a "mini-log" to: Hartmut Weber DJ7ST, D-3201 Holle, Kleine Ohe 5, Fed. Rep. of Germany. Logs should be sent no later than February 15, 1976.

1976 FRENCH CONTEST

CW
Starts: 1400 GMT Saturday,
January 31, 1976
Ends: 2200 GMT Sunday,
February 1, 1976

Phone
Starts: 1400 GMT Saturday,
February 28, 1976
Ends: 2200 GMT Sunday,
February 29, 1976

EXCHANGE:
French stations will send RS(T) and number of department. All other stations send RS(T) and QSO number.

SCORING:
Score 3 points for each QSO with French stations or French speaking countries (DUF, ON, HB, LX, VE2, OD, HH, 3B, 9U-Q-X). Score 10 points for contacts with F8REF, department ØØ.

MULTIPLIER:
Count one multiplier for each different department, ON province, HB canton, and French speaking country per band.

FINAL SCORE:
Final score is the total number of QSO points times the total multiplier points.

LOGS:
Send logs to: Lucien Aubry F8TM, Rue Marceau 53, 91120 Palaiseau, France.

Continued

RESULTS

RESULTS OF THE 1975 WASHINGTON STATE QSO PARTY

The following list shows all stations that received certificates for their participation in the contest. VE7ZZ/W7 was first overall in Washington and KØGJD/6 was the first overall for outside Washington.

Alaska	KL7HDX	1,170 points
Arizona	K7AL	1,978
California	KØGJD/6	9,242
	W6KYA	1,590
Colorado	KØQIX	2,124
	WBØGEX	1,944
Connecticut	WA1KMP	360
Florida	K4HWW	2,204
	WB4OGW	2,200
	W4LIN	1,232
Georgia	WA4APG	540
Illinois	W9WR	702
Iowa	WØPRY	1,620
Kansas	WBØIAQ	1,224
Kentucky	W4KFB	572
Maryland	W3YHR	204
Massachusetts	W1AQE	1,066
Michigan	W8CNL	1,120
	WB8PFB	814
Minnesota	WBØMAO	540
Mississippi	W5RUB	520
Missouri	WØQWS	1,824
New Jersey	K2JFJ	190
New Mexico	WA5YTX	464
	W5TIL	460
New York	W2MEI	704
North Carolina	WA4MWP	640
Ohio	W8CSK	224
Oregon	K7DRD	180
Pennsylvania	W3ARK	500
Rhode Island	K1QFD	320
South Carolina	K4HQU	266
South Dakota	WBØEVQ	1,620
Tennessee	WB4WHE/4	600
Texas	WB8FUO/5	1,560
	W5SOD	912
Vermont	K1IIK	36
West Virginia	WA8CNN	154
Wisconsin	W9YT	1,768
	K9DAF	396
CANADA – Manitoba	VE4UO	180
Ontario	VE3EJK	864
JAPAN	JA2HGA	280
	JA1WVK	266
	JA7KE	256

Washington State Winners

W7GHT/M7 won first place from the following 12 counties: Benton, Chelan, Columbia, Douglas, Ferry, Franklin, Kittitas, Lincoln, Okanogan, Pend Orielle, Spokane, and Walla Walla.

Other winners are as follows:

Cowlitz county	WA7LQQ, WA7PMW	13,440 points
	W7FGD/7	130
Grant county	W7GYF	9,045
King county	VE7ZZ/W7	79,424
	W7YTN	27,144
	K7JCA, W7EXM and WA3DVH	19,482
	WB5NLE/7	14,617
	WA7FHG	12,150
	WA7UQG	11,660
	WA7VBT	11,186
Kitsap county	K3USH/7	4,284
Mason county	W7IEU, WA7FKM	3,102
San Juan county	K7NHG	6,437
Snohomish county	K7NCG, WA7SLO and K7UWT	46,787
	WA7ZSJ/7	126
Wahkiakum county	WA7BSQ/7	576
Whatcom county	W7EKM	3,140
Whitman county	W7YH	29,412

ARRL DX COMPETITION

Phone
Starts: 0001 GMT Saturday, February 7, 1976
Ends: 2359 GMT Sunday, February 8, 1976
Starts: 0001 GMT Saturday, March 6
Ends: 2359 GMT Sunday, March 7

CW
Starts: 0001 GMT Saturday, February 21
Ends: 2359 GMT Sunday, February 22
Starts: 0001 GMT Saturday, March 20
Ends: 2359 GMT Sunday, March 21

These rules were taken from last year's contest, since the ARRL has not released information as of this writing. Check the December issue of *QST* for complete rules and any last minute changes.

Briefly, the rules are as follows: All fixed station amateurs, worldwide, are invited to participate. All amateurs in the 48 states and Canada will try to work as many stations in other parts of the world as possible. All other stations will work only W/VE stations. Entries may be in either the CW or phone section; each is scored independently. Entries are further classified as single or multiple operator stations. Single transmitter multi-operator stations will be recognized as a distinct category from multi-transmitter, multi-operator stations. Two transmitters on the band at the same time is prohibited. Single operator stations may enter in either the all band, high band, or low band categories. High band is 20, 15 and 10 meters, while low band is 160, 80 and 40 meters. Operating on a band not allowed in your class is permitted but those points will not be counted toward your total score. Crossband and crossmode contacts are not allowed.

EXCHANGE:
W/VE stations will send RS(T) and state or province. All others send RS(T) and power. KH6 and KL7 are considered DX.

SCORING:
Score 3 points for each completed QSO. Each station may be worked once on each band on each mode for contact and multiplier credit. Final score is the total number of QSO points times the total number of countries on each band (for W/VE stations), or the total number of continental states plus VE/VO licensing areas worked on each band (for DX).

AWARDS:
A plaque will be awarded to the highest single operator DX phone and CW station (non-W/VE) in each continent. On both phone and CW, a certificate will be awarded to the highest scoring station in each category and classification in KL7, KH6, each ARRL section, and each country where a valid entry is received. Also, a certificate will be awarded to each non-country winner DX entrant making 1000 or more QSOs on either mode. ARRL-affiliated clubs may also participate in club competition as described in *QST.*

LOGS:
A summary sheet, log sheets, and DX check-off sheet for each band used is required from all W/VE entries. DX entries must submit log sheets and a summary sheet. Separate logs, summaries, and check sheets are required for each mode used from all entries (no check sheets for DX). Logs and forms are available from ARRL, 225 Main St., Newington CT 06111. Send completed forms and logs to ARRL at the address above no later than April 1976.

QCWA QSO PARTY

Starts: 2300 GMT Friday, February 13, 1976
Ends: 2300 GMT Sunday, February 15, 1976

Every contact with another QCWA member will count. Briefly the rules are as follows; check the *QCWA Newsletter* for any last minute changes.

EXCHANGE:
QSO Number, QCWA Chapter Name, and operator's name. Send "none" in place of chapter if not affiliated with a chapter. Holders of Golden 50 Year Certificates should add the suffix "D" after their QSO Number.

SCORING:
Contacts between members living in their own or adjacent countries count one point. Contacts between members living in nearby countries that are separated by an intervening ocean or country count as two points. Contacts between members living on different continents count as 5 points. Contacts between any member and a member with a 50 Year Golden Certificate count for one additional point. A contact with the QCWA memorial station W2MM/4 counts for 2 points. Stations may be worked both on CW and phone but only once on each regardless of band. Multiplier: Each different chapter represented in your contacts counts as a multiplier. Final score is obtained by multiplying the total number of QSO points by the total multiplier.

FREQUENCIES:
Phone: 1805-1825, 3940-3960, 7240-7260, 14240-14260 28640-28660, 14280-14300
CW: 1805-1825, 3540-3560, 7040-7060, 14040-14060 21040-21060, 28040-28060
Contacts made on frequencies outside the listed bands or on QCWA or other net frequencies are not valid and will not count in your total. You may answer on any frequency in the listed bands, but you should not stay on any frequency except that whose last digit is your call area (Example: W7/K7 would call CQ on 20 meters on 14247 or 14257 if on phone or 14047 or 14057 on CW.) This restriction does not apply to stations outside the 48 states.

AWARDS:
This year QCWA will award certificates to chapters with the three highest aggregate scores. At least three entries must be received from the chapter. The "Annual Operating Award" plaque will be presented to the highest scorer in the contest. Presentation of the award will be made in June, 1976. Scores will be printed in the June 1976 issue of the *QCWA Newsletter.* If you contact W2MM/4, include a QSL card of your own to receive a special memorial card from QCWA Headquarters.

LOGS:
A sample log may be obtained from Dave Davis by sending an SASE to him at: 6971 Grand Vista Way, South, St. Petersburg FL 33707. Identify each sheet of your log with your name, call, address, city, state and zip. Number pages serially and staple them together. List your chapter name and Golden Certificate Number, if you have one. Logs should show: time (GMT), freq, call, QSO nr. sent, QSO nr. received, his chapter, operator's name, mode, QSO points, and multiplier points – for each QSO. Compute your own score and include it with your logs. Logs should be mailed not later than February 15, 1976 to Dave Davis W4GQ at the above address. In case of controversy, the judges' interpretation of the rules and their decision is final.

Continued on page 11

RESULTS

RESULTS OF THE 1975 FRENCH CONTEST

Number of Participants

	CW	Phone
France	334	423
French speaking	95	198
Other countries	445	203

Top French Stations (single operator)

F3CY	CW	809,100 points
F80P	Phone	832,688
5T5FP	CW	678,524
6W8DY	Phone	3,829,184
F6AXV/MM	Phone	836,082 (zone 39)

Other Countries (single operator)

CW	LZ1GX	259,449 points
	OD5LX	27,880
	W8KPL	25,410
	PY7ALC	7,030
Phone	I3MAU	274,298 points
	OD5BA	26,635
	VE3BS	30,615
	PY1EMM	175,812

Multi-Operator

CW	UK3ABB	286,116 points
	UK9ABA	83,720
Phone	4U1ITU	713,657
	DLØOC	198,450
	UK9CAE	83496

Looking West:

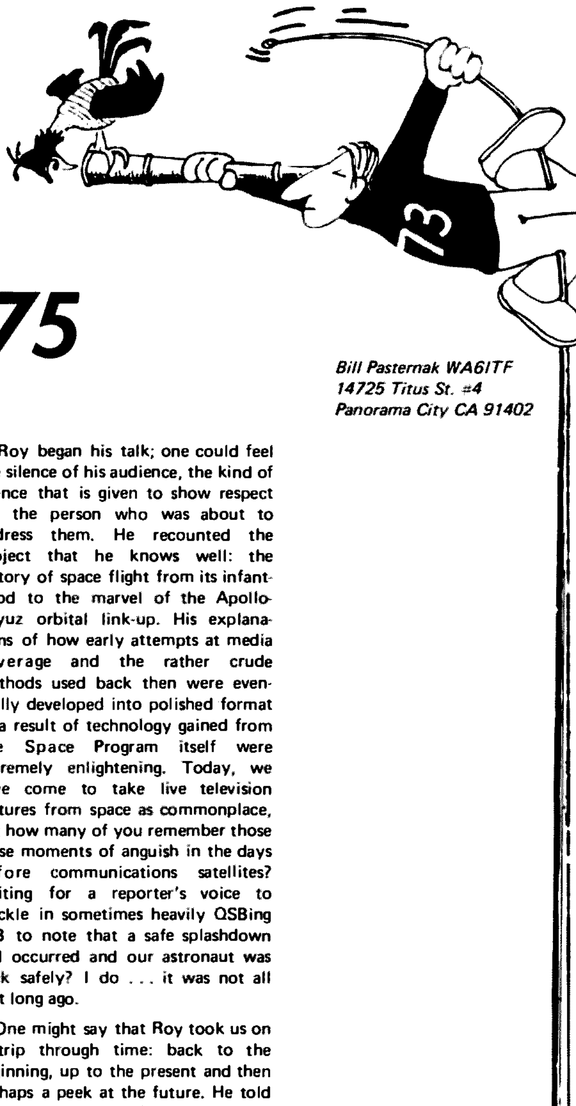

Ventura '75

Bill Pasternak WA6ITF
14725 Titus St. #4
Panorama City CA 91402

The traffic on 101 heading north seems quite light for this hour on a Saturday evening . . . for long stretches it seems that this Torino is the only vehicle on the road . . . another vehicle passes and that sets me to wondering out loud . . . here I sit at 55 . . . the maximum limit that one can legally travel without the CBers' pal "Smokey" doing his number on you, and on a major freeway with this little traffic on it . . . well, a speeder just stands out like a sore thumb. Anyone who risks the wrath of the CHP (California Highway Patrol) to save a couple of minutes while enroute from point "A" to point "B", and risks not only his life but that of everyone else on the highway, has got to be a "bad guy" in my book. Besides, the evening is so clear that to speed would only take a lot away from the excitement of the events to come later this evening . . . relax, if you are a few minutes late for the evening's festivities . . . so what? . . . WR6ABE, Burt's repeater on Mt. Wilson, breaks squelch on the Motorola as I start up a rise . . . damn thing has ears that seem to hear everywhere and a voice to match . . . well, here's my chance . . . better give Bill a call and confirm things . . . "KH6IAF/6 Ventura from WA6ITF mobile 6 . . . are you there Bill?" . . . "WA6ITF mobile 6 from KH6IAF/6 . . . what's your ETA, Bill?" . . . "About half way there and expect to be about 10 or 15 late . . . go." . . . "OK . . . call me on .52 when you reach the California Avenue off-ramp. The hotel is just across the highway . . . go." . . . "Call you on .52 in about 25 minutes . . . 73s for now. KH6IAF/6 Ventura from WA6ITF mobile 6 on highway 101 clear WR6ABE" . . .

That, friends, is the way the weekend began. While most people attending this year's ARRL Southwestern Division Convention had made their plans weeks earlier, I had not been sure until about three that afternoon as to whether I would or would not make it. Already, I had missed the first 1½ days of the get-together due to business commitments, but the lure of an event such as this is just too much for yours truly to resist. Besides, I had to be there by noon Sunday to cover the SCRA meeting for this column. Mainly, I did not want to miss the banquet this evening. No, not for the food, though a good dinner was promised; it was the keynote speaker at the banquet that I wanted to hear.

There are very few people that I truly admire, people who have developed within their chosen field of endeavor to a point of true overall professionalism, to a point where society recognizes them as being the best in their business. The man that was to speak this evening was one of those few and, as someone involved in the same profession, though on a far more limited scale, this was one time that I intended to be there. Hence the rush to leave work at 6 pm and be at the Holiday Inn in Ventura by 8.

From the very beginning of the United States space program, the broadcast media have always given coverage of the events top priority. From the first experimental Vanguard flights of the late 50s and early 60s, to Alan Shepard's first manned flight, to our first moon landing, to last summer's Apollo-Soyuz joint U.S.-Soviet venture, we had but to turn on the one-eyed monster to "be part" of it.

Covering events of this magnitude takes the skill and talent of many people, and I suspect that one could sit and compile lists that might well be longer than an edition of this magazine. Technicians, engineers, reporters, editors: Specialists in every aspect of news dissemination, working with a combined effort to bring the story to you at the moment it happens. Professionals in the true sense of the word, and among these one name has always been a part. One person has always been a part of space flight news coverage as far back as I can remember: Roy Neal of NBC News. To most Americans he has been one of the knowledgeable voices that has guided them through the intricacies of space flight — both manned and unmanned. To us, the members of the amateur radio community, he is more than that, for he is one of us; he is Roy K6DUE, an amateur radio operator in which our entire community takes pride.

Roy began his talk; one could feel the silence of his audience, the kind of silence that is given to show respect for the person who was about to address them. He recounted the subject that he knows well: the history of space flight from its infanthood to the marvel of the Apollo-Soyuz orbital link-up. His explanations of how early attempts at media coverage and the rather crude methods used back then were eventually developed into polished format as a result of technology gained from the Space Program itself were extremely enlightening. Today, we have come to take live television pictures from space as commonplace, but how many of you remember those tense moments of anguish in the days before communications satellites? Waiting for a reporter's voice to crackle in sometimes heavily QSBing SSB to note that a safe splashdown had occurred and our astronaut was back safely? I do . . . it was not all that long ago.

One might say that Roy took us on a trip through time: back to the beginning, up to the present and then perhaps a peek at the future. He told us how the knowledge gained as an amateur radio operator has aided him in the past and continues to aid him in developing the communication links necessary to cover these events. You could feel the pride that this man has in being a member of the amateur radio community. Throughout his talk he subtly tied his profession as a broadcast journalist to his love of amateur radio in a way such that you could almost feel that the two were inseparable — yet at the same time totally independent entities.

I suspect that it was his closing remarks which caught the imagination of every amateur present, especially those of us who are VHF-oriented. The space shuttle will be the next step in the story of man's conquest of space and eventually, maybe even in our own lifetime, men may live on the moon or other celestial bodies. To paraphrase Roy, eventually there may be amateurs on the moon and perhaps even repeaters up there . . . the pictures that formed in my mind were unreal. Imagine working the world on

VHF or UHF with but one squelch tail . . . imagine the thrill of the day when there will be an amateur repeater on the moon . . . the thoughts just blew my mind completely. When he finished, there came an ovation befitting the speaker and the words spoken.

As I sit here writing this some two weeks later, I cannot help but think that I was witness to something special. I have done much soul searching trying to find a reason for this feeling, but alas, I can only guess at it. Maybe it's due to my desire to emulate people like Roy and his colleagues (though on a far smaller scale) here in this column – a feat that I doubt I will ever achieve. To take on a responsibility such as Looking West or any other form of news reporting endeavor as an ongoing project is no easy task. There has got to be a love of what you are doing and a sense of responsibility to make sure you strive to do your best. In the many times I have watched Roy on the "tube" doing his job, I have gotten just this feeling – that of the true professional doing the kind of work he loves, the kind of work that is a part of him. Anyhow, for about 40 minutes on the evening of October 25, 1975, in the city of Ventura, California, there was a special kind of magic, a magic I will always remember.

Next month we will tell you a bit more about the Convention itself, but for now it's time to get on with some of the FM news – and that means the SCRA meeting held in conjunction with the Convention on Sunday, October 26th. If I were to choose one word to describe the major accomplishment of this particular meeting, it would be "Reunification." As reported last month, we were awaiting the outcome of "Concord '75," a meeting that would decide if there would or would not be a statewide coordinating council and, if there was, exactly what form it would take. Unfortunately, my deadline was about a week prior to the aforementioned meeting, so we can only now report that there will indeed be a CARC, basically along the formative lines outlined in earlier columns. The newly reorganized CARC got a real "shot in the arm" with the decision of the SCRA general membership to have the SCRA formally affiliate with CARC as southern region 144 MHz and 220 MHz liaison. (I use the word "liaison" for lack of a more descriptive word.)

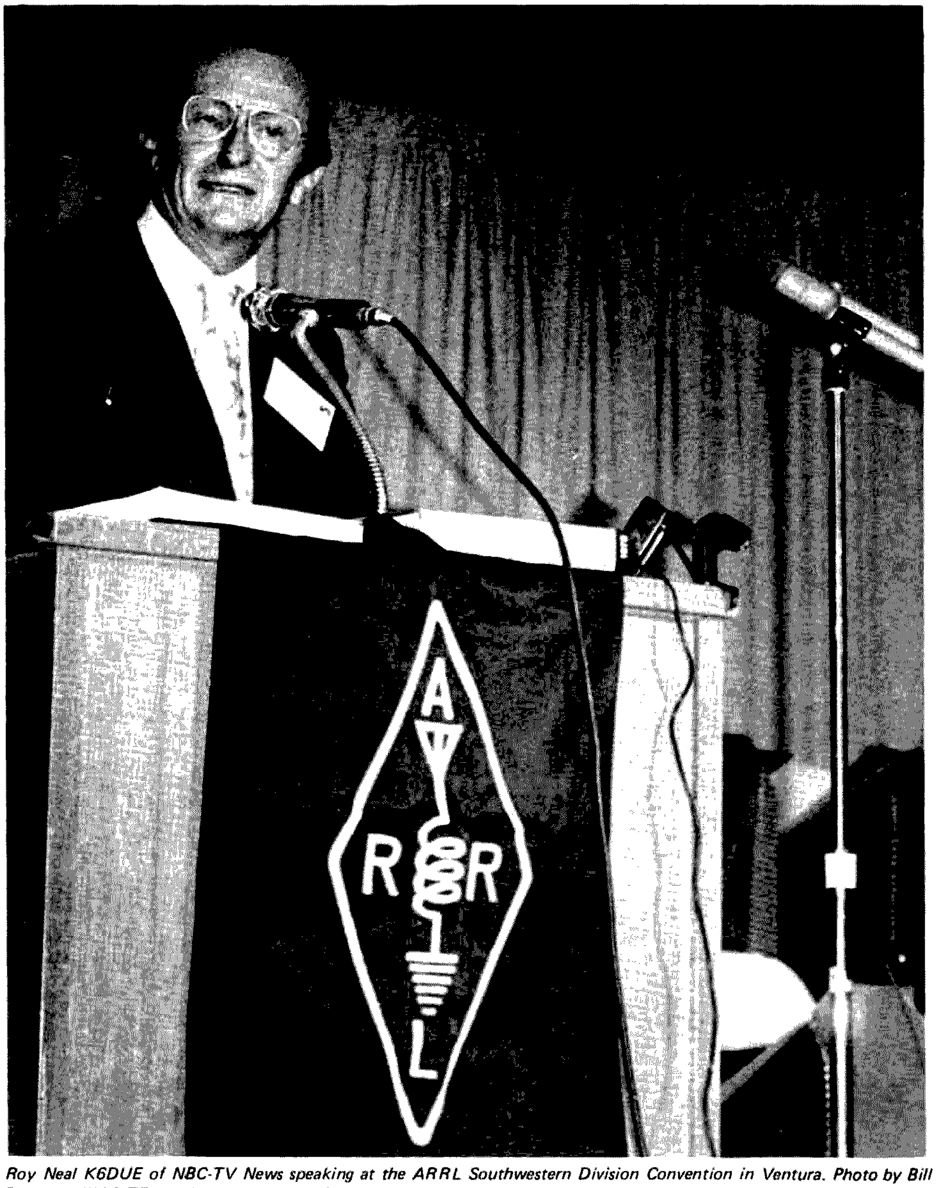

Roy Neal K6DUE of NBC-TV News speaking at the ARRL Southwestern Division Convention in Ventura. Photo by Bill Pasternak WA6ITF; special processing by George Roberts.

The SCRA will still retain its own authority within its administrative area, and will continue operations as it has in the past. Its move to affiliate is one of support of the concept of a statewide organization overseeing problems of a statewide or national nature. It remains now to see if the Northern California repeater and remote owners, i.e., the recently established NARC organization, will also affiliate.

As it was explained by Gary Wood WA6DTX of the CARC, great care has been taken to structure the "new" CARC to prevent any sort of unilateral power structure from developing. The directorship will consist of representatives from each of the four (yes, I know that past columns had said three, but at Concord it was decided that there would be four regional bodies) regional coordinating bodies. Each regional body will appoint three people to act as area representatives to the CARC Executive board and any one member of this board will have veto power over the actions of the entire board. The remaining three board members will be the officials of the CARC itself, and this body *will not* involve itself in matters of local coordination policy or with local standards and practices. The main purpose of the "new" CARC is to provide the California FM community with a totally unified front in dealing with other areas and other organizations such as the FCC, the ARRL, etc. The vote to affiliate was unanimous and, along with SCRA's current chairman Dick Flanagan, Bob Thornberg WB6JPI and Dick McKay K6VGP were elected as SCRA representatives. (As SCRA Chairman, Dick Flanagan's appointment was automatic.)

I suspect that Gary summed up the goals of the "new" CARC best in his opening remarks. To paraphrase what he said, at one time about ten years ago we were all one FM community, but over the years we have permitted ourselves to drift apart and become individual interest groups (such as repeater and remote). The aim of the reorganized CARC is to bring all special interests together once more under one roof for the continued well-being of amateur radio. The first general membership meeting of CARC will be held here in the southland next spring, and at that time I hope to be able to report on some "good things" coming from CARC.

Talking about official recognition, the amateur radio community really got some of the best yet. About a year ago, a group of local amateurs banded together and formed the Community Amateur Radio Service, an organization that has worked along with the Los Angeles Police Department in an effort to help thwart the spread of crime. These amateurs have devoted their spare time in public service toward their community and their success has been such that the LAPD has seen fit to issue the following letter to the CARS people:

William Orienstein
President C.A.R.S.
C/O N.B.C. T.V.
3000 W. Alameda
Burbank, California

Dear Mr. Orienstein

Citizen involvement with local police is of paramount importance in any crime prevention program. During the last year your organization has been instrumental in combating rising crime patterns within our area. Please convey our commendation to your entire organization. Your help has undoubtedly reduced crime in areas of deployment and saved our taxpayers in time and money.

If my office can be of any assistance during subsequent deployment please contact me.

(s) L. Binkley, Lieutenant II
North Hollywood Area
Community Relations Officer

Talk about good public relations! In my book the foregoing is super good "PR" for the amateur radio community: Amateurs working hand in hand with the police to make a safer community for you and me to live in. We need more groups like this all over the nation, since the concept of public service is one of the basic precepts of amateur radio itself.

CONTESTS

from page 8

TEN-TEN NET
WINTER QSO PARTY
Starts: 0001 GMT Saturday, February 14, 1976
Ends: 2400 GMT Sunday, February 15, 1976

The contest is sponsored by the Ten-Ten International Net of Southern California, Inc., and is open to all amateurs — but only 10-10 members are eligible for awards. All contacts must be made on 10 meters, any mode, and a station may be counted only once.

EXCHANGE:
Name, QTH and 10-10 number.

SCORING:
1 point for each contact; 1 point if with a 10-10 member; 1 point if outside your own state, province or country. Maximum of 3 points for any one contact.

LOGS:
Logs should include date and time of each contact as well as the required exchange information.

AWARDS (for 10-10 members only):
Certificates to first and second place winners in each US district, Alaska, Hawaii; each VE district; Central America and Caribbean; South America; Europe; Africa and South Atlantic; Asia and Northern Pacific; Australia, New Zealand and South Pacific. Send logs to Grace Dunlap K5MRU, Box 445, La Feria TX 78559, by April 1, 1976. For complete results, see the *10-10 Net Summer Bulletin.* To become a 10-10 member, work any 10 members and send a list of those contacted along with $3.00 to the manager in your district.

RESULTS OF THE 1975 QRP — SUMMER — CONTEST

QRP Section (first 10 places of 54 entries)

	Call	*Points*	*Bands*	*Input Power*
1.	WB9LGZ/9	12908	40	3 Watts
2.	GW4DOO	10976	40-15	9 & 5
3.	G3IGU	8088	160-15	3 & 8
4.	G3DNF	7688	80-15	3 & 8
5.	HB9QA	6250	160-20	8 & 3
6.	DJ7MG	6187	80-20	7
7.	DL6ZG/P	5662	80-20	2
8.	DJ3WM	5439	80,20,15	5
9.	GW3PG/P	5372	160-20	2 & 3
10.	G3NEO	4986	80-10	2

Best Band Results

Band	*Call*	*Score*
160	DJ1ZB	180
80	DJ9IE	2680
40	WB9LGZ/9	12908
20	OK1MGW/P	1485
15	G3DNF	1040
10	DK5AQA, DK7OJA	78

First place in the QRO section (of three entries): DM2FIL/P, with 48 points.

RESULTS

SOCIAL EVENTS

MANSFIELD OH
FEB 8

The Mansfield Mid-Winter Hamfest/Auction is now a new day and location. It will be held on Sunday, February 8, 1976, at the Richland County Fairgrounds. Forums, large indoor flea market area, displays, door prizes and auction; easy access from I71 and US 30. Registration $1.50 in advance, $2.00 at the door. Tables for flea market $1.00 each. Doors open at 9 am; auction begins at 2:00. No commission charged. Talk-in 3,972.5 kHz 146.52 and 146.34/94 MHz. Additional info and advanced tickets from Harry Frietchen, Jr., K8JPF, 120 Homewood Rd., Mansfield OH 44906. (419) 529-2801 home; (419) 524-1441 work.

WHEATON IL
FEB 8

The Wheaton Community Radio Amateurs annual midwinter hamfest is Sunday, February 8, at the DuPage County Fairgrounds, Wheaton, Illinois (Manchester Road, near County Farm Road), 8 am to 5 pm. Tickets $1.50 advance, $2.00 at the door. For advance tickets send $1.50 each and a self-addressed stamped envelope to L. O. Shaw W9OKI, 433 S. Villa Avenue, Villa Park, Illinois 60181. Advance tickets postmarked no later than February 1.

TRAVERSE CITY MI
FEB 14

The Cherryland Amateur Radio Club will hold its third annual Swap 'n Shop on Saturday, February 14, 1976 from 9 am to 4 pm at the Northwestern Michigan College campus in Traverse City. Talk-in 146.52 and 3935. Door prizes will be given away. For more information contact Bill Mader WA8WWM, Box 2, Empire A.F.S., MI 49630. Donation is $1.00.

CUYAHOGA FALLS OH
FEB 27

The 1976 Cuyahoga Falls Amateur Radio Club Annual Auction and Flea Market will be held on February 27, 1976 at the Bolich Jr. High School, Cuyahoga Falls, Ohio. Admission $1.50 advanced registration. Deadline February 1, 1976. $2.00 night of auction. Talk-in frequency: 84/24-04/64-52/52. Call: W8VPV. Advance tickets: K8VAK and XYL, 3043 De Walt Dr., Akron OH 44312, 216-644-1213.

ROCK FALLS IL
MAR 7

The Sterling Rock Falls Amateur Radio Society Hamfest will be held March 7, 1976 at Sterling High School Field House (bigger and better location), 1608 - 4th Avenue, Sterling IL 61081. Tickets $1.50 advance – $2.00 at door. For info write – Don VanSant WA9PBS, 1104 - 5th Avenue, Rock Falls IL 61071. Talk-in 94 simplex.

VERO BEACH FL
MAR 20-21

The Bi-Centennial Treasure Coast Hamfest will be held at the Vero Beach Community Center Saturday and Sunday, March 20 and 21, 1976. Sponsored by Vero Beach Amateur Radio Club, Inc., and St. Lucie Repeater Association, P.O. Box 3088, Vero Beach FL 32960.

WASHINGTON DC
MAR 24

1976 ARRL Technical Symposium on Mobile Communications will be held on the evening of Wednesday, March 24, 1976 at the Statler Hilton Hotel, Washington, DC. Areas of interest are: HF/VHF/UHF mobile communications, repeater technology and operations, signaling and control techniques, special mobile communications (AMSAT, ATV, RTTY, etc.); especially subjects of interest to both amateur and commercial mobile radio users. Summaries are due by February 1, 1976. Manuscripts, photo of author and biographical sketch of amateur/electronic background due by March 1, 1976. Write: Paul Rinaldo K4YKB, 1524 Springvale Ave., McLean VA 22101 or call (703) 356-8918 evenings.

ST. CLAIR SHORES MI
APR 4

The South Eastern Michigan Amateur Radio Association is holding its Eighteenth Annual SEMARA Swap 'N' Shop on April 4, 1976, from 8 am EST to 3 pm EST. It will be held at the South Lake High School in St. Clair Shores, Michigan, on the Southwest corner of Nine Mile Road and Mack Avenue.

MEADVILLE PA
MAY 1

The Northwestern Pennsylvania Swapfest will be held May 1, 1976 at the Crawford County Fairgrounds, Meadville PA. Free admission. $1 to display. Flea market begins at 10 am. Hourly door prizes and refreshments. Commercial displays welcome. Indoor if rain. Talk-in 146.04/64 and 146.52 MHz. Details: Crawford Amateur Radio Society, Box 653, Meadville PA 16335.

JAFFREY NH
MAY 15

The 1st Annual Fly In and Flea Market will be held Saturday, May 15, 1976 at the Jaffrey Municipal Airport (Silver Ranch) in Jaffrey, New Hampshire. *73 Magazine* will host the event. Picnic facilities, food stand, great ice cream, horseback riding available at Silver Ranch stables across the road from the airport (200 yds). Plenty of hangar space for exhibitors, etc. Come one – come all – if you can't fly – drive – but get here. Jaffrey is 6 miles south of Peterborough on U.S. Rt 202.

HAM HELP

I am a subscriber to *73 Mag.* I think it is a very fine magazine. This note is written to thank *73 Magazine* for publishing Ham Help, as appears on page 6, Nov/Dec, 1975:

I wrote to Fred Kahn WB2TBC for ham help and within one week received an informative reply. The information will be of great value to me. Thanks to all the fine people at *73 Mag.*

Edward Victor WN8SEG
Lake Milton OH

World Radio News, a newspaper published for hams, 2509 Donner Way, Sacramento CA 95818, has offered to supply amateur radio clubs with the names and addresses of all amateurs in their respective areas who are newly licensed or upgraded. Our club has used this service since June 1975 and has received over 200 names so far.

We send each one a copy of our newsletter and an invitation to visit our next meeting. Over 10% have joined our club and more are coming each month. We give others the name of a club closer to their homes. A great service – use it.

Bob Reiley WB2FHN
Hall of Science Radio Club
Flushing NY 11352

Please place my name in your Ham Help column.

Mark A. Arnold
5022 Herme Place
Apt. E-5
Valdosta GA 31601

Please add my name to your list of Ham Helpers. As a ham I've had the most fun and learned the most while helping others get their license or upgrade. I have an Extra class license and a First Class Radiotelephone license and would enjoy sharing my knowledge with others interested in ham radio. My phone number is 272-4944. I'm available evenings and all day Saturday and Sunday. 73 and keep up the good work.

Tom Frisz WB9IUQ
19455 Staffordshire Dr.
South Bend IN 46637

Autobiography of an Ancient Aviator

W. Sanger Green
1379 E. 15 Street
Brooklyn NY 11230

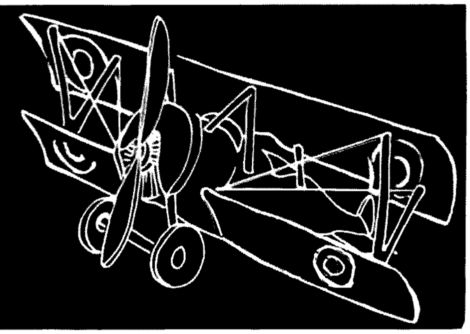

To transport General MacArthur I had the real shaky ship pulled out of the back of the hangar and dusted off.

Langley Field Incidents - 1925

Along toward the end of October, one of my men told me that his mother was in serious condition in a Boston hospital and asked me for a few days furlough to visit her. I gave him the furlough and, in addition, I got Major Westover to authorize a flight to Boston for him. We started out early the next morning in a DH and got as far as Cape May, N.J., when we were forced down by weather. Next morning we got an early start, stopped at Lakehurst for weather information, fueled at Mitchel Field, and got to Boston by early afternoon. While my passenger was visiting his mother I tested a Moraine Parasol that a group had assembled but hadn't been able to find anyone to flight test. After inspecting it I offered to take it off and fly it around for a few minutes for $25 and another $25 if I landed it safely. I got my $50. I stayed the night with the Hal Bazleys. (I had delivered an LWF plane to him in 1923.) On the way back the next day I ran into treetop weather between Bolling and Langley. I decided that before the trees got any taller I had better sit down in the first field that came along. I landed in a muddy farm field near Mimini Grove, Va. The farm was run by four bachelor brothers. They had no phone, so I got them to hitch up a horse to a wagon and drive me to the nearest phone, which was in a small store three miles away. Then I checked in with Langley operations so they wouldn't start a search for us. While at the store I bought 10 lbs. of flour, 10 lbs. of sugar, 10 lbs. of salt and a gallon of molasses to take back to the farm. This was real back country. The farm was pretty much self-sustaining, so they were glad to get the staples I brought in exchange for dinner, bed and breakfast. They had no watch or clock on the place – lived by the sun. No electricity or running water (a pump over a well in the yard), but they did have a three hole back house. By noon the next day the field had dried out a bit, so I managed to lift off and get back to Langley that afternoon.

Sometime in September a young recruit was assigned to my squadron. I had a talk with him when he first reported: a nice kid just out of high school in the Pennsylvania Dutch country. He was assigned to one of the maintenance crews in the hangar. About the middle of November several bombers on the line were idling their engines preparatory to a formation takeoff when, for some reason, this recruit, who had been told to remove one of the wheel chocks, came from under the wing and walked right into an idling propeller. We sent a corporal and a flag home with him.

On the 30th of November my turn came to fly what they called the "Model Airway." This was a weekly scheduled DH trip that took 5 days, with stops at 16 Air Service fields from Detroit to St. Louis, and averaged about 25 flying hours. Anyway I was away on this trip when two of my lieutenants paid off the squadron for November. Among those they paid was the deceased recruit. The error wasn't discovered until a couple of months after all three of our tours of active duty had ended. The two lieutenants and I had correspondence with the Army on the subject for the next five years.

Sometime in September I got orders to provide a bomber and crew to transport General MacArthur to Bolling Field, D.C. I got the word that he was going to either testify at or be on the court of the Billy Mitchell trial in Washington. The message was clear so I had the real shaky ship pulled out of the back of the hangar and dusted off. I tested the engines, made a short test hop to make sure it would hang together, then set her out on the line to await the General's arrival. Oh! I forgot. I had my electrician rig a wire to the right engine ignition switch from a button on the side of my seat. When the button was pressed, the right engine would cut out. When MacArthur arrived, we fitted him out with helmet and goggles and loaded him into the copilot seat – and away we went. I pointed out the empennage (tail) that was fishtailing its way behind us and told him that, after all, we couldn't expect these WW I stick and wire planes that were engineered and built 8 to 10 years ago to last forever. I also told him that I thought we were just lucky that there was no war going on where we had to use the types of aircraft we had for any military missions etc., etc. In the meantime, that right engine kept misbehaving. I managed to keep our average ground speed down to about 50 mph on the trip. Upon our return to Langley that afternoon Old Wobbly was put in the back of the hangar again.

One day I was checking Bill Winston (an old friend from Carlstrom Field) out in a bomber. He was an excellent pilot but he had never flown a two engine plane. In about twenty minutes his air work was OK so I told him to try a landing. Before I go any further let me explain that in those days flying fields were all grass – no runways. So, to get on with the story, Winston was making a good landing approach into the wind when I saw a DH coming in for a landing downwind – and headed right for us. We were leveling off when I decided that the fellow in the DH hadn't seen us, so I poured on full power and told Winston to pull up right. We missed the DH so Winston took the ship around and landed it OK. We missed a collision by about 30 feet. This was not an enjoyable experience, so I went right to the field operations office to enter a complaint. While I was talking it over with the operations officer, who should walk in but Major Westover, the field Commandant. He was the pilot of the DH and was all shaken up. He took the entire blame for the incident and begged pardon, etc. I told him that we were all lucky and should be glad that we hadn't made the boys in the hospital heat up that big pot of wax.

Three or four nights a month we had to do a tow target mission for the anti-aircraft and searchlight batteries at Fortress Monroe. This was a bomber job. The target was about 25' x 10' and was made of canvas with weights to keep it flying as near horizontal as possible. A tow cord with release was attached to the tail of the bomber and then laid on the ground parallel to the takeoff run for about 1200 feet to the tow target. When you took off after dark you would pick up the target and climb as fast as possible and proceed to the Chesapeake side of Fortress Monroe at about 1500 feet. The searchlights would try to find the target and pass it on from one to the next. Then the anti-aircraft battery would shoot at (hopefully) the target. We would make passes over the battery for about an hour, each time coming over at a different altitude and from a different direction. Then we would go back to Langley, release the cord and target and land. It was sort of fun except that sometimes the anti-aircraft shells would come too close for comfort.

Next month I'll wind up my Langley Field tour of active duty with a couple of incidents and jump into the hotel and restaurant range business for awhile.

NEW PRODUCTS

MICROPROCESSOR/INTERFACE BOARD OFFERS MULTI-LEVEL BUSING

A new Plugbord, from Vector Electronic Company, accommodates up to two supply voltage levels to permit the use of a wide variety of microprocessor and interface circuits. Designated Model 4350, the board has copper cladding on opposite sides for shielding and to supply primary power (plus on one side, negative on the other). Interwoven zig-zag lines, also on opposite sides, facilitate power distribution. The combination allows convenient use of both MOS and TTL devices.

Primary power buses, which pass under the DIP positions, are unperforated and opposite one another. This provides bypass capacitance for transient suppression. The zig-zag lines are also opposite but with the zigs and zags out-of-phase. There is ample space and mounting means on the board for bypass capacitors at each DIP position and also at the incoming power position.

The large 7 in. by 9.6 in. board will hold 63 fourteen or sixteen-pin DIPs. Alternately, five 24-pin microprocessors and 45 DIPs may be placed in the main field. Either socket blocks or individual socket pins may be mounted to order, or the board will mount 40-pin microprocessor (0.6 in. tab spacing) units. Plugbords may be purchased bare as Model 4350. Additional DIPs may be placed in the side margins or in a large unclad area at the top of the board. For input/output, the board has 40/80 etched contacts spaced on 0.125 in. centers. Unclad areas may also be used for DIP I/O connectors. Alternatively, tape cable connectors may be attached at the top or side of the board.

The DIP board, originally developed for interface with Texas Instruments' 980 Series computers, has a multitude of general applications. Due to the abundance of extra 0.041 in. dia. holes on tenth-tenth grid, the board may also be used for

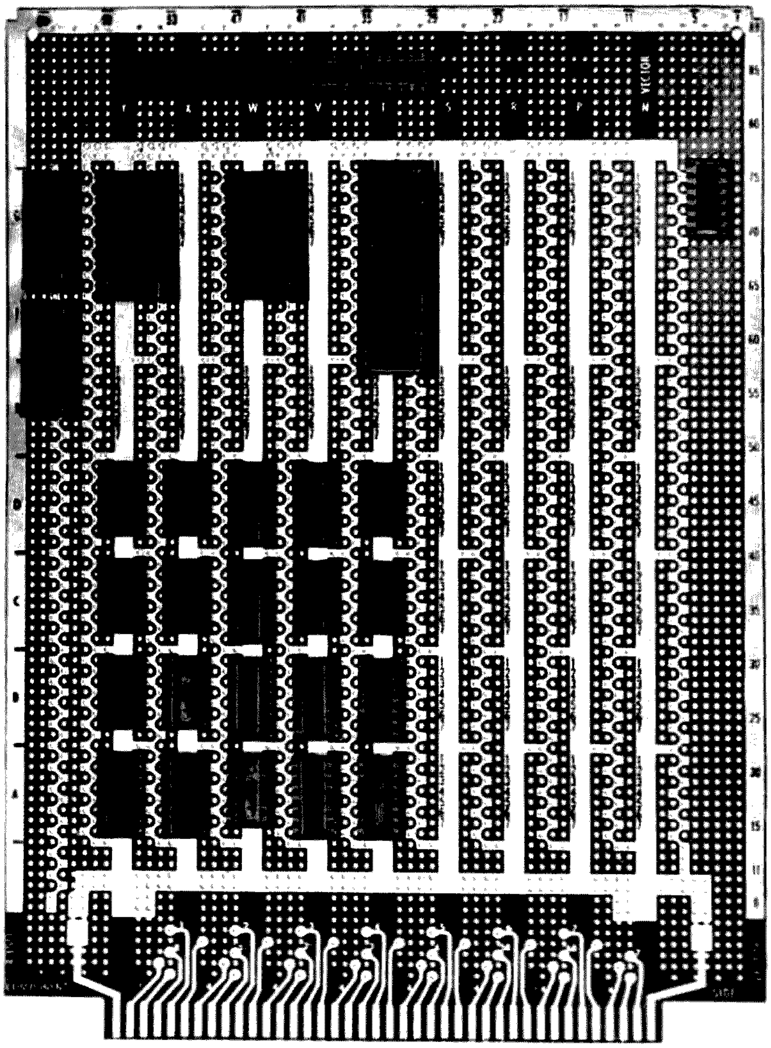

Vector Plugbord Model 4350 (shown with added DIPs) accommodates 14-, 16-, 24- and 40-pin DIPs for use in a variety of circuit applications.

analog circuitry, mounting resistors and most other components easily. Either the Vector P173 Wiring Pencil technique (with solder) or wrapped connections may be used.

On the left side of the board the letters "A" through "I" mark each double nine-hole zone. Along the bottom the letters "0" through "Y" designate vertical zones. Like a road map, specific components may be called out by the coordinates. DIP pin numbers from 1 to 7 are etched into the clad area. General X-Y coordinate numerals are shown at top and bottom.

The Plugbords are made of flame retardant glass material and have all surfaces tinned except the contacts which are nickel-gold. Holes for ejectors are supplied for easy card removal.

The boards are priced at $14.95 each in 1-19 quantity, with quantity discounts available. They are in stock at Vector Electronic Company and may also be ordered through the firm's AVID distributors in the United States and Canada.

Vector is a major manufacturer of sockets, terminals, connectors, printed circuit boards, card cases, enclosures and complete packaging systems.

Vector Electronic Company, Inc., 12460 Gladstone Avenue, Sylmar CA 91342. Phone: (213)-365-9661; TWX: (910)-496-1539.

NEW MILLEN CATALOG

Remember when you could walk into a distributor and buy such goodies as coil forms, switches, mechanical drives, high voltage connectors and the like? They are still available factory direct, along with other goodies, from Millen. Send for their new catalog. *James Millen Mfg. Co., 150 Exchange St., Malden MA 02148.*

3 NEW HUFCO UNITS

Hufco – the makers of the popular 3 digit Communications Counter, TWS-3, designed specifically to read-out transmitted frequency – announces two new frequency counters and a prescaler. The two counters have 300 mV sensitivity and operate through 250 MHz. They are called the model TWS-300 and TWS-600 for three digits and six digits respectively. Both the three and six digit units outwardly look identical to their 30 MHz counterparts (no pun intended). Both come equipped with 115 V ac power supplies, but will work with 12 V dc through a 1 Watt dropping resistor. The most amazing thing about the counters is their price: The TWS-300 is $99.95 kit ($117.95 assembled) and the TWS-600 is only $119.95 kit ($139.95 assembled). Currently the units are available only from the factory, but dealer inquiries are invited (must be on letterhead).

Hufco's low cost prescaler works with any counter, and will multiply the capability of the counter by 10 up to 250 MHz. It comes assembled, with its own power supply on a single PC board suitable for inserting inside the case of your present counter. The low price is $59.95. Low frequency limit is approximately 1 MHz.

D-D's MAGNIFIER/LAMP

If you've been doing any IC construction projects or kit building, you are well aware that one of your most important needs is some way to see what you are doing. Enter the D-D Enterprises combination magnifying glass and fluorescent lamp which clamps on your workbench – or even a card table, if you are more the instant workshop type of builder.

The fact is that you need a lot of light and a lot of magnification to make sure that all those holes are soldered right on PC boards and that there are no bridges between islands or plug-in contacts. With the D-D you can work with both hands free and see exactly what you are doing.

Permission is granted to cut out this little piece and leave it for the XYL as a hint for a present. Look for the ads or write to D-D, Box 7776, San Francisco CA 94119. Costs less than $50. Be sure to see the ad in this issue.

EDITORIAL BY WAYNE GREEN

from page 3

Inputs are things like teletype machines, television typewriters, ASCII output keyboards, cassette tapes, paper tape . . . things like that. Outputs are mostly the same things. I/O. You'll like it.

I/O also represents the fundamental quantities of digital electronics, zero and one. Okay?

IS ANARCHY SO BAD?

While I've only been listening to the citizens band in New England and New York, what I've been hearing has been very encouraging. The fact is that the FCC policy of just leaving the CBers alone has worked out rather well. The CBers themselves have accommodated to the medium and many of the excesses of the past are that.

The sunspot minimum has helped the situation, of course. The ban on amplifiers has helped, too.

It's been ages since I've heard any bad language on CB . . . most of the contacts there are very friendly, ritualized and superficial . . . but they *are* radio contacts and it is a fact that millions of people are getting a taste of what radio can do . . . just a taste, mind you.

Whenever I hear an Amateur bad-mouthing CB I ask if he has used CB within the last year or so . . . the answer, without fail, is no. I haven't heard any CB users griping much about CB as it is today. I'm listening whenever I drive anywhere and find the road information of great value and many of the overheard contacts quite interesting. Most are not, naturally.

I may be wrong about all these people who are getting their feet wet for the first time in radio communications being prime material for conversion to Amateur Radio. I'll be most interested in hearing your luck with this . . . or lack of it.

Those CBers who are serious enough about the medium to get sideband gear seem to be particularly prime targets for Amateur Radio classes. It's something to think about.

The coming de-regulation of amateur radio may look a little less frightening to those who feel that stricter controls are needed rather than freedom if they spend some time operating on CB and seeing what a totally unregulated radio system is like and how amazingly well it works.

PC COPYRIGHT

Warning . . . if you are designing or manufacturing printed circuit boards you would do well to include a copyright notice on the board. More and more manufacturers are regretting this oversight as bogus boards turn up in their repair department . . . boards with their circuits on them, but obviously made by someone else . . . and poorly made.

Bill Godbout recently got a board in for repairs . . . he couldn't believe it, how could one of his boards be warped like that? A close inspection provided the answer: he'd been ripped off. I've seen rip-offs of Southwest Tech boards too, so there is a lot of that nonsense going on.

Warning . . . if you are going to buy a PC board, make sure you get it from the manufacturer if you are ever going to want help with repairs. The buck or two you save by greasing the palm of a rip-off artist may come to haunt you. Look for that copyright mark when you buy a board and watch out for flaky outfits . . . there are a lot of them.

FOREIGN LANGUAGE

My first brush with computer folk was when I decided to investigate the possibilities of an in-house computer for *73 Magazine*. I quickly found that the salesmen were unable to communicate with me. I turned to some ham-computer friends and found that they, too, spoke in computer language and were unable to interface with the English-speaking world.

What is it that happens to otherwise normal people when they learn to talk

in computerese? Seemingly they then forget what it was not to know this language and to be unable to further communicate with the non-computer world. Weird.

We need a lot of fundamental articles in *73* on microcomputers and their amateur radio applications, but we also need to have these written in either English or, worst case, ham language. One of these days someone is going to come along who has learned the computer field and still remembers that there was a time when he was not sure what software subroutines were ... and he is going to become rich and famous as an author. Well, famous, anyway.

73 SWEEPSTAKES WINNERS

As an experiment *73* ran a subscription sweepstakes contest last Fall with some attractive prizes. The idea was to create enough energy in subscribers to get them to send in renewal cards early and help us to save money by not having to send three and four notices.

The first prize was a windjammer cruise for two ... a ten day extravaganza of sailing, skin diving, swimming and possible DXpeditions among the rarer Caribbean islands.

The second prize was an Icom IC-230 with ac power supply ... and who couldn't use one of these ... or even two?

Third was a Chronex digital watch ... then a MITS 908M calculator, still one of the best of the breed and way above most of the hand calculators in useful functions.

Other prizes awarded were a cassette recorder, a digital clock for the shack, an ASCII output keyboard and many of the *73* books. In all there were 117 prizes awarded.

The windjammer cruise for two was won by P. G. Kaiper WA7UMF of Milwaukie, Oregon. Enjoy.

The IC-230 went to John Grubs W8GRT of Sylvania, Ohio. The Chronex digital watch was won by D. R. Krusza WB2IUD of Eggertsville, New York. The MITS calculator went to W6RDP in Canoga Park, California, the ASCII keyboard to C. P. Isbell K5EWC in Seguin, Texas, the cassette recorder went to Mickey Gallagher W6JRA of Colton, California and the digital clock for the shack to an L. Kushner of Burbank, California.

One of these days, when we get things organized again, we'll get another subscription renewal sweepstakes going ... hopefully on a regular basis. Right now things have been happening so fast that we are having a difficult time keeping up.

"GET OFF THIS NET FREQUENCY ..."

A nice front page article in the Columbia, South Carolina *The State* described how a local amateur (Henry Randall) helped save a Canadian boat headed from North Carolina to the Virgin Islands. The emergency call came in from VE0MCM/MM with three Canadians aboard and lost in a heavy storm for three and a half days and some 450 miles off course.

The call came while three locals were having a chat on 75 meters. Henry sat up with them all night and helped the Coast Guard find the lost boat and save the three men. All were suffering seriously from seasickness and were too weak to stand up. Two are, as of this report, still hospitalized and listed as in serious condition.

The medical advice passed along by Henry is credited with keeping the men alive until they were rescued. In all it was another of those amateur radio emergency situations to which all of us can point with pride.

Well, almost all. There was a chap in Florida who refused to give his call but who was very insistent that the emergency be moved down below 3900 kHz so he could conduct his net. This lid wouldn't shut up until someone took the time to explain to him in detail why *his* net frequency was being used for an emergency. I suppose we have to have one like that, right?

Thanks to WA4AIV for the report on the emergency and nice newspaper clippings of the amateur radio PR which resulted.

MOBILE NOISE

A nice article came in recently on mobile operating, but it had one striking omission ... there was nothing about how to get rid of the worst enemy of mobile contacts ... noise. Oh, there have been articles on this problem in the past, but car design is keeping up with and passing the old techniques.

The time was when you could easily isolate the spark coil and set about getting rid of ignition noise and things were cool. How many of you have looked into your engine compartment recently? I confidently raised the long hood of my Datsun 280Z ... hell, I've been at this for years, big deal there's noise in the FM rig ... and even worse noise on 10m ... as a matter of fact you wouldn't believe the 10m noise.

It didn't take me long to discover that something has happened to automobile design ... this car of mine is packed with cables going all over the place. I did find the coil, but I couldn't find the transistor oscillator which drives it ... and that seemed to be what was garbaging the 10m receiver. How could I get rid of the noise when I couldn't even find the main elements of the system? Oh, for wise guys who ask why I didn't get out the instruction book ... I did, have you looked at yours? Mine did not give any hint as to where any oscillator was located.

The dealer who sold me that car shook his head over the wild screeching noise coming out of the speaker. Seems he has a lot of customers with the same problem and he doesn't know anything to do about it. He did show me a big manual on the car and I managed to find the oscillator by tracking through the electrical system. The diagram was more complicated than most computer schematics.

Has anyone out there been able to quiet the cry of these newfangled transistor oscillators they're using to drive spark coils these days? I need to know and I'm sure a lot of others would like to know too. If I tell you something confidentially you'll not be angry and keep back the mod for quieting my monster, will you? I lied. That wasn't 10m where I had all that noise ... it was 11m.

INSTANT CODE?

Well, almost. The fact is that it is possible, using recently discovered techniques, to learn the code in a fraction of the time most of the old timers had to devote to it. It isn't yet completely painless, but a whole lot of the sting has been removed.

Funny, the modern system not only works, it makes sense, too! About the only thing wrong with it is that it flies in the face of about 50 years of teaching in the handbooks and license manuals.

Any old timer will tell you that to learn the code you have to start slow and then pick up speed as you learn. You *can* learn it that way ... if you're got lots of time and patience. That system has defeated an awful lot of prospective amateurs who didn't have the patience it took to do it that way.

Think about it for a moment. The whole idea is to train your mind to automatically recognize a sound pattern and have your hand write a letter. It's not much different from a lot of other patterns we teach ourselves ... tying shoes, driving ... playing an instrument. But what happens to the learning process if we keep changing the sound patterns we are trying to pattern into the mind? Morse code at five words per minute doesn't sound anything at all like eight or twelve words per minute. What we have been doing in the past is learning to copy at one speed, then another, and another ... driving ourselves unnecessarily crazy.

The modern system is to learn the sound of the characters at the speed you want to copy and just space the characters to give the mind time to work. Even at five words per minute each character should be sent at the desired 13-per. This will cut a hundred hour back-breaker into a ten hour jaunt.

Now, with over 25,000 of the *73* code tape cassettes using this system in use, and with most of the club-organized classes using the *73* code cassettes, few prospective amateurs are having to slave away with the old system ... thank heavens.

The whole cassette project came from my effort to find out which code teaching system was best so I could recommend it in the magazine. After reviewing everything I could find, I decided that none were what I considered up-to-date. I talked with a couple code tape people and asked if they had any plans to modernize ... no. So I said what the hell and sat down and made my own master tapes. It was a grueling experience turning out a solid hour of absolutely perfect

code without variation in speed. Try it sometime, you code freaks.

The cassettes now available start with an introductory one hour tape that teaches the 40 characters you need to know . . . letters, numbers and punctuations. Many people get them in an hour. For those going for Novice or Tech there is a six word per minute tape, one hour of gibberish, unmemorizable. Those made of sterner stuff can go right to the 14 word per minute tape. It's slow going at first, but then things fall into place and instead of copying at five, six, seven, eight, etc., you find you are copying at 14! And you also may notice that the old hump at ten words per minute just isn't there.

The hump was the painful result of finally being forced by the speed of the code to stop translating and, at long last, get started where you should have in the first place . . . automatic copying. Everything before the hump was wasted. Some people, with monumental effort, are able to translate code . . . listen to the character and then remember what it is . . . right up to almost twelve words per minute. At this time the speed of the brain won't hack it further. It's so much more difficult that it is a real pity when people get into that bind.

For speed demons I have a 25 wpm tape. Canadians may prefer the 10 wpm tape. Extra Class devotees will want the 21 wpm practice tape. I've never heard of anyone failing the FCC exam when they could copy this tape.

The major problem in copying code for the FCC is overcoming the panic of the test. By setting the speed on the tapes a bit high I've found that this margin is enough to bring on a giant sigh of relief when the code test starts . . . it sounds so slow compared to the tape that all fear disappears and the whole thing is a piece of cake. The FCC tests are in relatively plain language too, which gives you an extra margin since the tapes are in cypher to prevent memorization.

OSCAR CONTACT

After noting the low level signals of Oscar 7 in mode A and the beautiful signals in mode B, I could see which way I should go. But there were some serious technical problems between wanting to get on via Oscar and actually getting on the air. You don't yet go out and buy a 432 sideband rig to poke that signal into Oscar.

The downlink was not much of a problem. I got a KLM two meter circularly polarized beam for starters. Then came the Vanguard converter to be mounted up at the antenna. That should do it. About that time my Signal One gasped and emitted a very expensive smell. That was going to be my downlink receiver on 10m. Panic . . . eased by some promises by ITC (which was the manufacturer of the rig) to fix it. This later was changed to a deal whereby we would get a couple of their Multi-2000s in exchange . . . not quite as good as the converter into a hot 10m receiver, but usable. We're still waiting for the Multi's . . . or the Signal One . . . or *something!*

Tucker had an old Yaesu 560 in good shape so we bought that and put that into the line as a receiver. Oscar came in fine on this once the antenna was in place. That was half of the project . . . well, considering the complexity, that was 1/10th.

After a good deal of digging around I located an outfit in California which made 28-432 MHz tube type converters ($140) . . . and I got one. This meant a second 10m rig to use as an SSB generator with about one Watt output to drive the converter. My Atlas wouldn't hit the right part of the band so I ended up borrowing a Ten Tec Argonaut from Tufts Radio . . . bless Tufts. The converter only had about five Watts output, not nearly enough to tickle Oscar, particularly after going through a hundred feet of coax and a phasing section.

Sensing that I was going to need more than a little help with this whole matter I enlisted Sandy Cole W1PVF who drove up from Boston not a few times to work on the antennas, the equipment, the rotators and the feedlines. As things got closer to fruition Chuck Martin WA1KPS and Joe Polcari WA1PQE swung into action, digging up power supplies to run this and that, spending hours on the roof changing the feedlines and the connectors.

In line with needing more power at 432 MHz, I contacted TPL and eventually ended up with a not inexpensive 432 amplifier. Not inexpensive at all. But nice.

After checking out the system and getting it about ready to go, Chuck, Sandy and Joe came up one Sunday and spent the better part of the day getting everything ready. Oscar was due over in mode B at 8:10 pm according to our figures. We adjourned for a leisurely dinner at a nearby restaurant and then headed back to the shack, an hour in hand.

Chuck decided to check out the antenna rotating system . . . the pass would be almost directly overhead. He swung the beam upward and it stuck! Ooops. The three of them headed to the roof with a hack saw to hack off the back end of the antenna boom that was hitting the chimney, preventing the 180° swinging of the antenna vertically . . . then they needed a 10' step ladder . . . quite a deal in the black of night in November on top of a sharply peaked roof. With minutes to spare and much coordination on 52 via HTs the antennas were ready to go and the rig fired up.

Picture four people all tuning for signals, trying to grab the mike and zero in on received signals. There were several minutes of arms, legs, body language, and grunting before my persistence won out and I managed to get momentary control of both the transmitter and the receiver . . . and get a contact with WA6UAP . . . 5x5, he said. I gave him a 5x7. It was exciting. We'd made it.

Continued on page 144

Chuck WA1KPS, Joe WA1PQE and Sandy W1PVF work to get the 73 Magazine *Oscar antennas into orbit.*

Trekkies, Build this Starfleet Communicator!

by
Marc I. Leavey, M.D. WA3AJR
10-J Tentmill Lane
Pikesville MD 21208

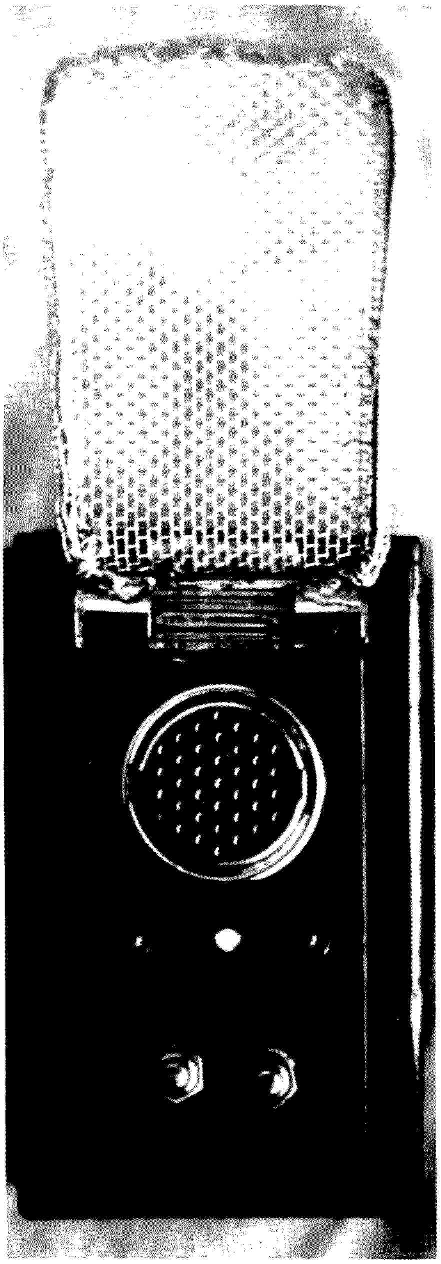

**TOP SECRET
CLASSIFIED**

**FOR COMMAND
LEVEL USE
ONLY**

The plans contained herein are drawn from data in storage at Starfleet Archives, UFP, and are released for information only. Operation of communications devices within this sector of the galaxy is restricted under UFPCC regulations to authorized individuals only.

"Star Trek," a television show popular in the late 1960s, spawned a cult of followers that cannot be believed. There are Trekkies in all walks of life, particularly among college students, electronic engineers, doctors, and, it is hoped, hams. There are books, models, and national organizations devoted to perpetrating the culture of the United Federation of Planets. In this vein, I have designed and built a functional model of a Starship communicator.

The Communicator, as any dyed-in-the-wool (or velour) Trekkie knows, is the all-purpose, futuristic HT carried by all landing party personnel. Besides a basic, long range transceiver, the communicator also contains a transporter beacon for beaming up and an emergency distress signal for urgent transportation. This version, designed after the TV model, has all of these features.

On the front panel, there are the speaker/mike, three LED function lights, and two control switches. A hinged lid covers the controls, which serves the dual function of on/off switch and antenna. The

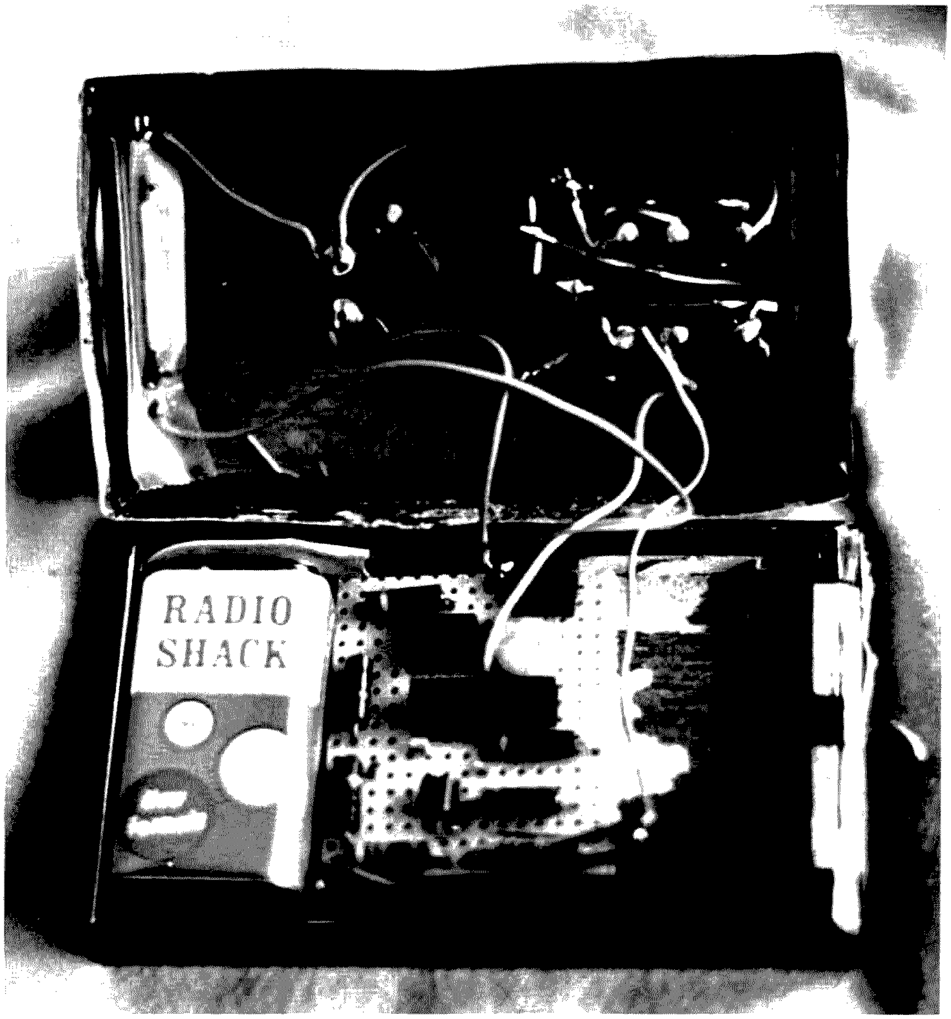

LED function lights represent ON (Green), HIGH POWER (Yellow), and EMERGENCY (Red). Two push-button switches control the HIGH-LOW power function, and the EMERGENCY beacon. Opening the Communicator lid not only turns the unit on, but produces the characteristic series of blips which identifies the hand-held device.

The circuit, shown in Fig. 1, is for the basic pulse generator that supplies the effects for the unit. The unijunction transistor is used as a simple oscillator, the output of which is fed to a 7493 4-bit binary counter. Four pulses are derived from this, in a one-half second gate, and fed to a 555, connected as an audio oscillator. The output of this goes to a speaker.

The complete communicator schematic is illustrated in Fig. 2. The LEDs are wired in series with the pulse generator, and no series resistors are needed, as current is effectively limited by the pulse generator. A 200 uF capacitor is needed across the battery to bypass internal resistance. Two SPDT push buttons are wired with the LEDs. One alternately selects the Green or Yellow LED, to represent LOW or HIGH power. The second switch normally shorts the Red LED. When depressed, the short is opened, lighting the LED, and a current is delivered to pin 4

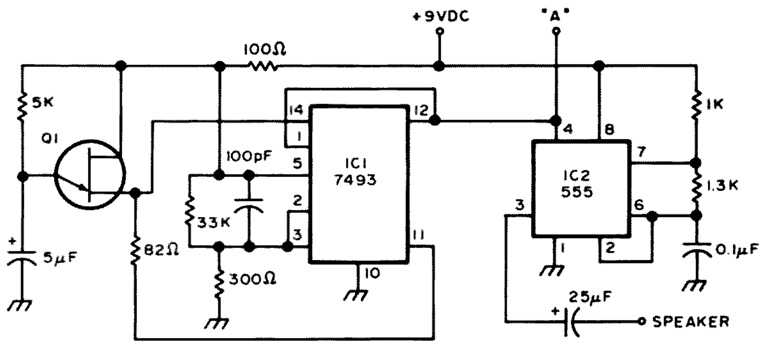

Fig. 1. Basic pulse generator.

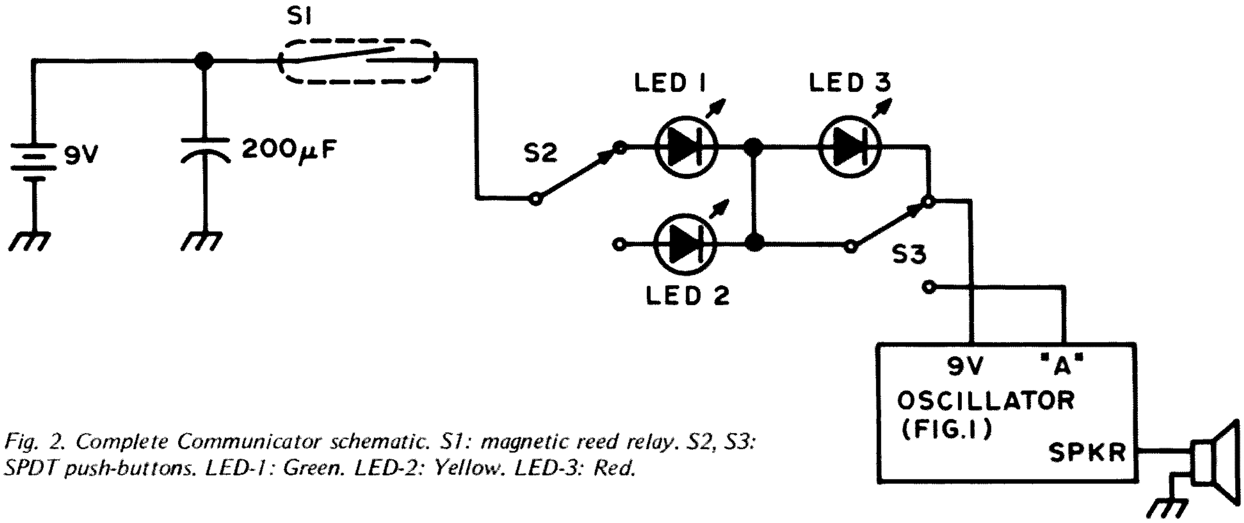

Fig. 2. Complete Communicator schematic. S1: magnetic reed relay. S2, S3: SPDT push-buttons. LED-1: Green. LED-2: Yellow. LED-3: Red.

of the 555, triggering a continuous oscillation.

Several techniques were tried for turning the communicator on when the lid was opened. The method finally settled upon was the use of a magnetic reed relay under the cover, with a small bar magnet mounted on the antenna lid.

Mechanically, the device is constructed in an appropriate sized, small wooden jewelry box. Such boxes are universally used by jewelers for necklaces, etc., and one can usually be scrounged from a wife or girlfriend. The speaker is a small, surplus earphone. Suitable types are available widely for a couple of dollars. A snap-in pipe bowl screen, with the snaps removed, serves as a miniature speaker grille. The LEDs are press-fit into the front panel, and the switches mounted conventionally. Fourteen-gauge wire is bent into a rectangle and covered with window screening for the antenna lid. Two rings from the center of a cheap ballpoint pen are soldered to one side, and the assembly mounted on a plastic tube, acquired from an old Bic pen. A small spacer glued to the bottom of the tube serves as a mount, and to keep the antenna assembly from slipping off. In order to activate the hidden reed relay, a small magnet is glued to the antenna, near the hinge. All of the electronics fit comfortably onto a 3 x 5 cm piece of perfboard, with the wiring done point-to-point. Detailed construction is left to the builder, but, with reasonable care, the finished result should delight any Trekkie.

I would like to extend sincere thanks to Robert Glaser WA3MSW, who aided immeasurably in the construction of the communicator. We would like to note that construction has been started on a small transporter. A shortage of dilithium crystals, however, has stalled the project. Any reader with an adequate supply is invited to write to the above address. ■

OPERATION INSTRUCTIONS
FOR
SF MOD. 6272 HHC

1. Stand in a reasonably clear area for transmission.
2. Open the unit with a gentle flick of the wrist.
3. Production of several coded blips and illumination of the green telltale indicate the unit is functioning and ready for use.
4. Speak clearly into the speaker/mike, remembering that this device has an instantaneous voice operated transmit and receive circuit.
5. If receiving station complains that your signal sounds weak, boost power by depressing the left push-button. The yellow telltale indicates high power operation. USE MINIMUM POWER TO GET THE MESSAGE ACROSS!
6. FOR EMERGENCY USE ONLY: Depress the right push-button. The red telltale comes on, and the automatic beacon is activated. When the button is released, the telltale extinguishes to conserve power, but the beacon is continuous. Assume transport position; beam-up should commence within 30 standard seconds.
7. This device is limited to one parsec communications range. As long as a Federation vessel or receiving monitor is within that range, communications will be possible.

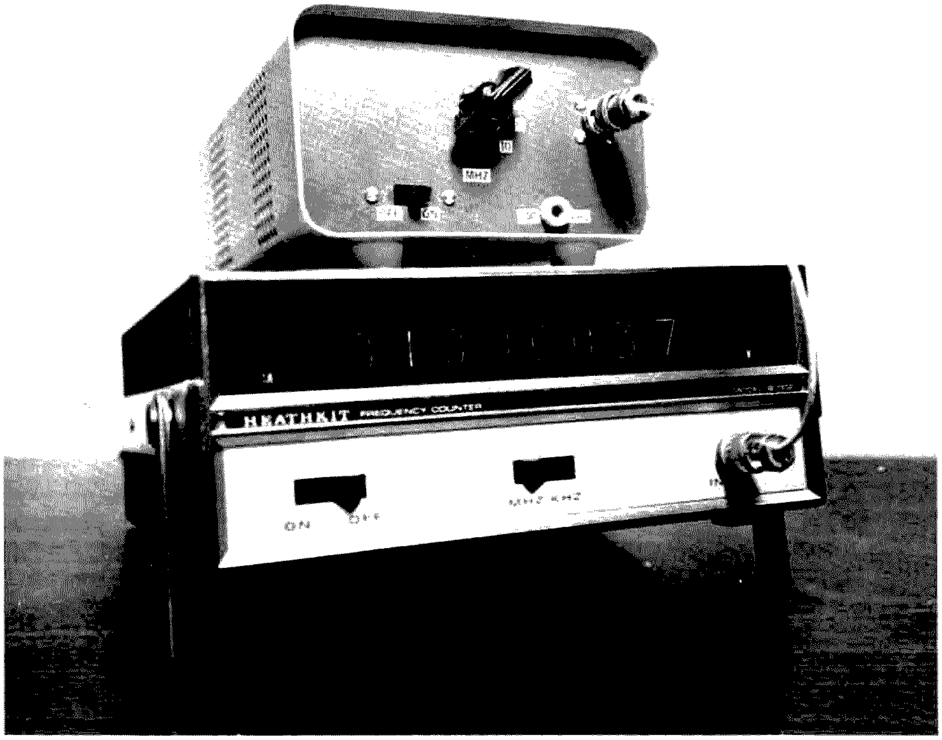

by
A. E. Plavcan
P.O. Box 6173
Anaheim CA 92806

Synthesized receivers are gradually appearing in the marketplace. Their numbers will increase as the cost of complex ICs drops. They all operate basically the same, using the phase lock loop (PLL) technique of generating L.O. (local oscillator) frequencies. One crystal is used to generate the whole range of L.O. frequencies – each frequency as accurate as the crystal.

Here's a project that will provide you with several precise (.005%) frequency standards and also get you familiar with phase lock loops.

The heart of this unit is the NE562 phase lock loop. Internally it has a phase comparator, adjustable low pass filter, a VCO (voltage – controlled oscillator) and two outputs. It also has provisions for inserting a programmable divider between the phase comparator and VCO, thus permitting frequencies to be changed.

The frequency range of this device is 1 to 10 MHz in 1 MHz steps, with an accuracy of .005% at each frequency (greater accuracy is possible with a closer tolerance xtal). The output is a symmetrical square wave at each frequency that is useful as a scope timebase calibrator, checking bandwidth and frequency response of HF amplifiers, calibrating communication receivers with the 100 kHz output, or as a "clock" for future IC projects.

All of the ICs (including the NE562) are readily available from electronic mail order houses. The remaining few parts you can get from your junkbox. They are all "or equivalent."

How It Works

Before we get into the details of construction, a little basic operation of phase lock loops may be helpful. A basic phase lock loop consists of a phase comparator, a VCO and a low pass filter, as shown in Fig. 1.

The phase comparator (or phase detector) has two inputs, the reference frequency and the output of the VCO. The output of the phase comparator is a dc control voltage proportional to the phase difference between the two input frequencies. The control voltage equation is $V_c = K(\Theta_{ref} - \Theta_{vco})$ where K is a constant in volts/radian and $(\Theta_{ref} - \Theta_{vco})$ is the phase difference in

A Synthesized IC Frequency Standard

radians. Now the VCO frequency is controlled by a dc voltage. As the frequency of the VCO tends to drift, a phase error develops and is fed back to the comparator which compares it with the reference signal and produces a dc voltage that changes the frequency of the VCO in the direction that will reduce the phase error. Since the VCO is controlled by a dc voltage, any ripple on the voltage will FM (frequency modulate) the VCO. That's the purpose of the low pass filter between the phase comparator and

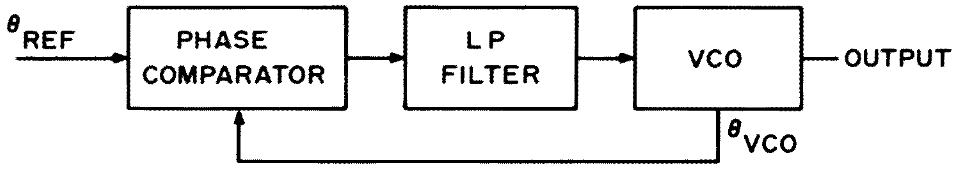

Fig. 1. Basic phase lock loop.

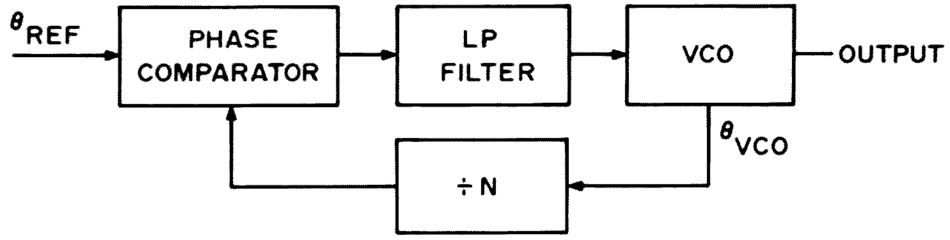

Fig. 2. Variable divider added to basic phase lock loop.

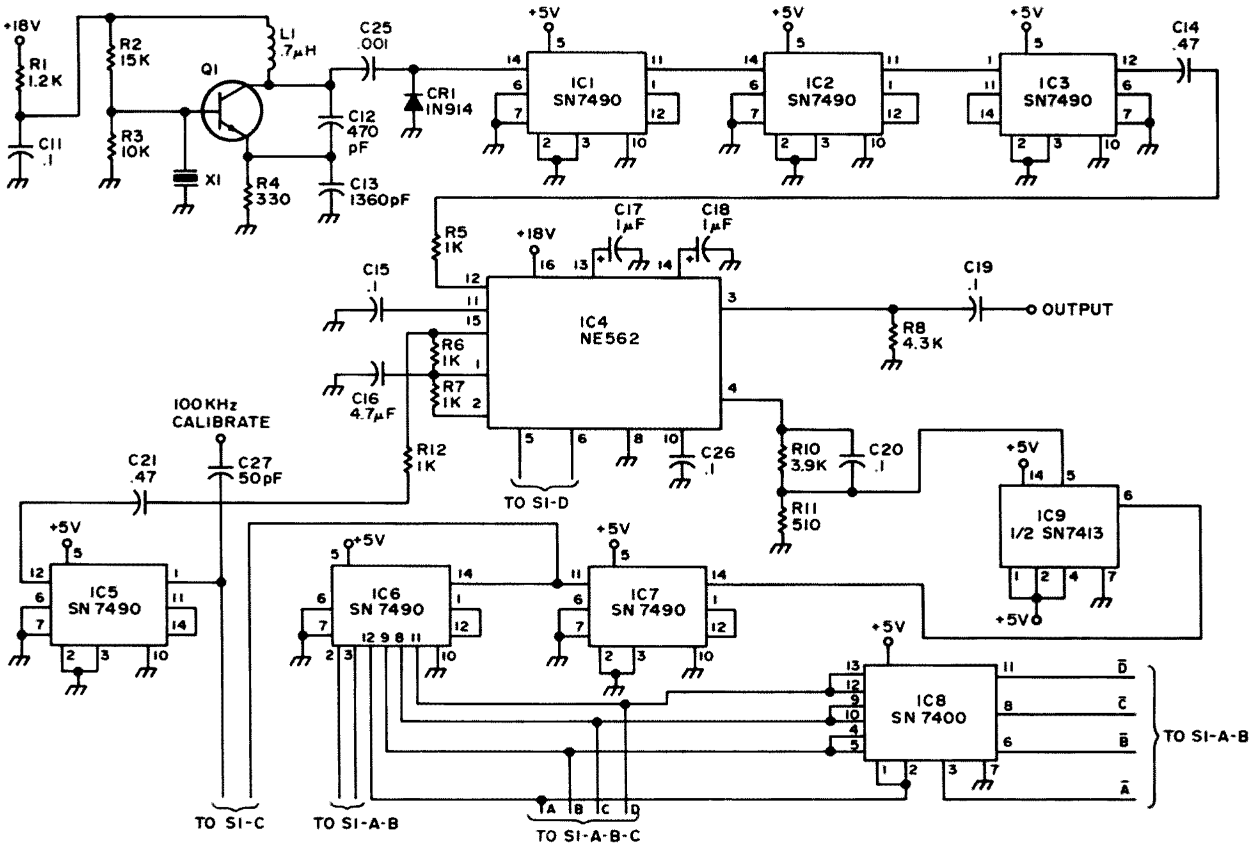

Fig. 3. Schematic diagram. R1-R12 — ¼ Watt carbon resistors; C11, C15, C19, C20, C25, C26 — 20 V disc; C12 — silver mica Elmenco DM19; C13 — silver mica (2 — 680 pF in parallel) DM19; C14, C21 — 35 V Sprague type 196D, 474X0035HA1; C17, C18 — 35 V Sprague type 196D, 105X0035HA1; IC1, IC2, IC3, IC5, IC6, IC7 — SN7490 decade counter; IC4 — NE562 phase lock loop; IC8 — SN7400 NAND gate; IC9 — SN7413 NAND Schmitt trigger; Q1 — 2N5172; X1 — 10 MHz .005% crystal (series resonant) from Jan Crystals, 2400 Crystal Dr., Ft. Myers FL 33901; L1 — .7 microhenry inductor; S1 — rotary switch 4 pole 10 position, Centralab PA-1015.

VCO, to reduce this ripple. It also helps to set the capture range of the loop.

One drawback of Fig. 1 is that it will only work at one frequency. The output frequency is the same as the reference and there is no way to change the frequency. If we put a variable divider (÷N) between the VCO and the phase comparator feedback path, we can vary the frequency of the VCO, then divide it down so that the phase comparator inputs are always the same. This allows us to change the VCO yet maintain the same inputs to the phase comparator. See Fig. 2.

The control voltage equation now is:

$$V_c = K\left[\Theta_{ref} - \frac{\Theta_{vco}}{N}\right]$$

where N is the number programmed into the variable divider. The operation of this system is the same as the basic loop described above.

The Reference Circuitry

The circuitry of Q1 is a 10 MHz .005% crystal controlled oscillator. R2 and R3 is the bias network. C12 is the feedback capacitor and is part of the resonant tank along with C13 and L1. If you don't have a .7 uH inductor for L1, you can make your own by winding 19 turns of #30 magnet wire (closewound) on a 1/2 Watt resistor (100k or larger). C13 is 2 680 pF capacitors in parallel. X1 is a 10 MHz .005% (series resonant) crystal.

C25 is a coupling capacitor to the following IC. Normally, a shaping circuit would be included here. But the rise and fall times at 10 MHz are adequate to trigger the IC. We will need a diode though (CR1) to clip the negative going transitions and prevent V_{eb} breakdown in the IC. IC1, IC2, and IC3 are wired to divide by 10. The output of IC3 is at 10 kHz. This will be the reference signal for the phase comparator. You'll note that IC3 is wired a little differently than IC1 and IC2. This is done so that a symmetrical 10 kHz square wave is fed to the comparator. R5 reduces the drive level into the comparator.

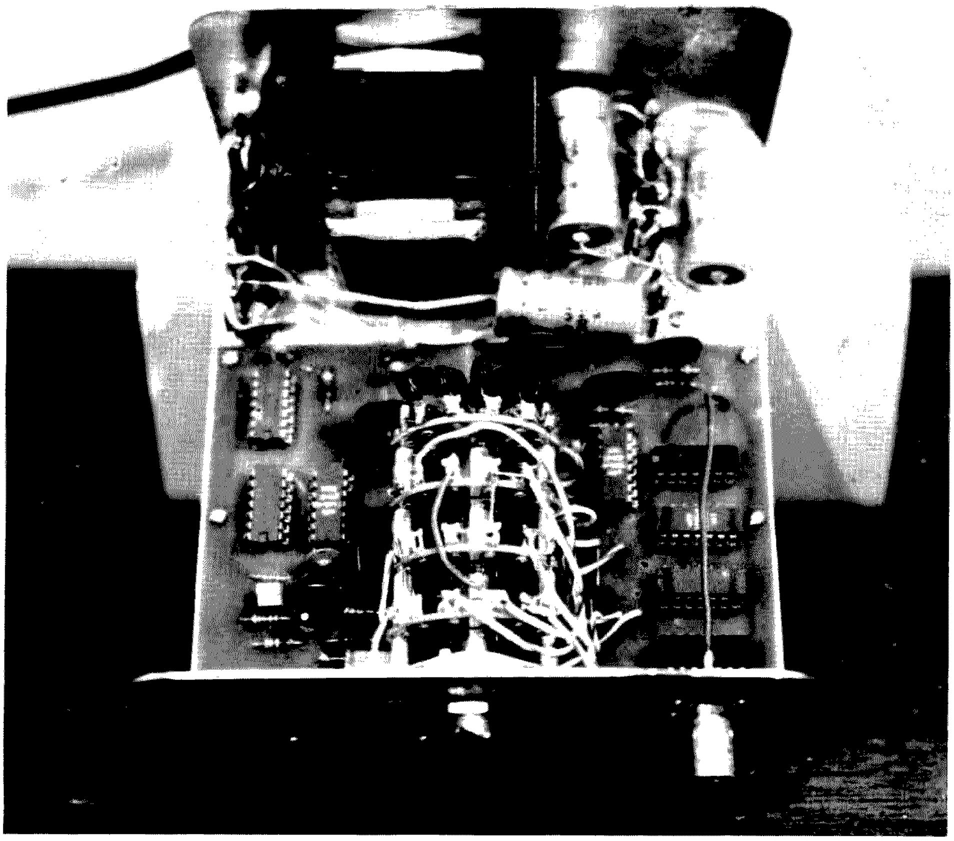

The Programmable Divider Circuitry

Pin 4 on IC4 is one of the VCO outputs. R10, R11 and C20 couple the signal out while still maintaining a dc path for the emitter in IC4. This signal is fed into IC9 which is 1/2 of an SN7413. The SN7413 is a dual Schmitt trigger. A Schmitt trigger improves the rise and fall transitions over a wide range of input frequencies. Since the output frequency changes from 1 to 10 MHz, suitable transitions are necessary over the full range of frequencies to insure positive triggering for the following IC. IC7 is a prescaler. It divides the output of the VCO by 10. This was done so that the programmable divider following (IC6) will operate at a lower range of frequencies, from 100 kHz to 1 MHz. Propagation delays and race conditions can cause false triggering at high frequencies. IC6 is the programmable divider. This is where all the switching of the system takes place. Basically, we want to divide all frequencies out of the VCO so that the output of the programmable divider is always 100 kHz. For example, if the VCO is at 5 MHz, the prescaler reduces it to 500 kHz and the programmable divider is switched to ÷5 and the output is 100 kHz. If the VCO is at 9 MHz, the programmable divider is switched to ÷9 and the output is 100 kHz. IC6 can be switched from ÷2 to ÷9. Now at 1 MHz the output of the prescaler is 100 kHz. We don't need the programmable divider here so it is simply bypassed. The output of IC6 is further divided by 10 in IC5, wired to provide a symmetrical 10 kHz square wave out. R12 is the same as R5, to reduce the drive to the phase comparator. R15, CR2 and CR3 are part of the ÷7 decoding. CR2 and CR3 can

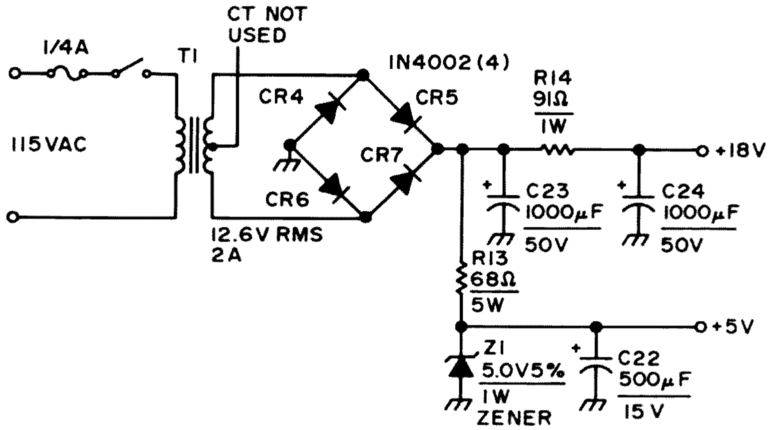

Fig. 4. Power supply. R13, R14 — carbon resistors; C22 — 15 V; C23, C24 — 50 V; T1 — 12.6 V rms power xfmr Allied 6K36HF; Z1 — 5 V ± 5% zener diode 1N4733A; CR4-CR7 — 1N4002 (PRV 100 V, 1 A).

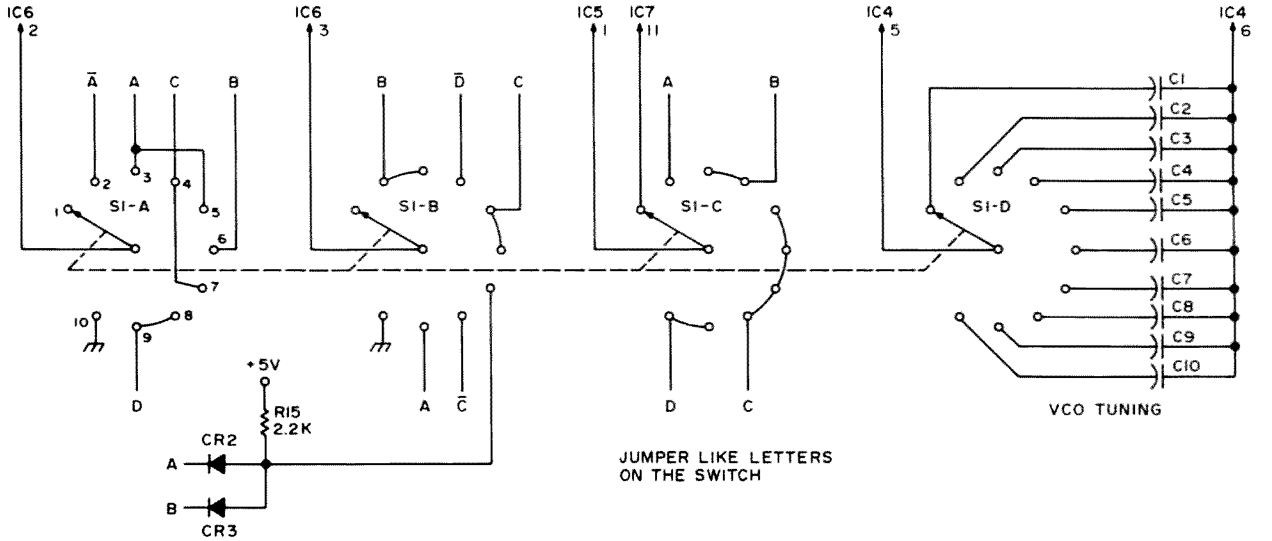

Fig. 5. Programmable counter switching and VCO tuning diagram. C1-C10 – Elmenco DM10 or DM15 silver micas (see text); CR2, CR3 – 1N118 (germanium).

be any general purpose *germanium* diodes. IC8 inverts the A, B, C, D outputs of IC6 to provide the $\overline{A}$, $\overline{B}$, $\overline{C}$, $\overline{D}$, outputs to decode the programmable divider.

So now we have described the development of the two input signals to the phase comparator, one signal as a fixed reference (Θ_{ref}) and the other containing the phase error information (Θ_{VCO}) from the VCO.

Pins 5 and 6 on the NE562 (IC4) are provided for capacity tuning the VCO. As each frequency is switched, the capacitor across pins 5 and 6 has to be switched. The free running frequency of the VCO has to be tuned within the capture range of the loop. As mentioned earlier, the low pass filter determines the capture range of the loop. C17 and C18 on pins 13 and 14, respectively, on IC4 are the low pass filter capacitors. When the free running VCO is tuned within approximately 300 kHz of center frequency, the loop will lock. The following chart gives the approximate tuning capacitors for F_C at each frequency. They should all be silver mica.

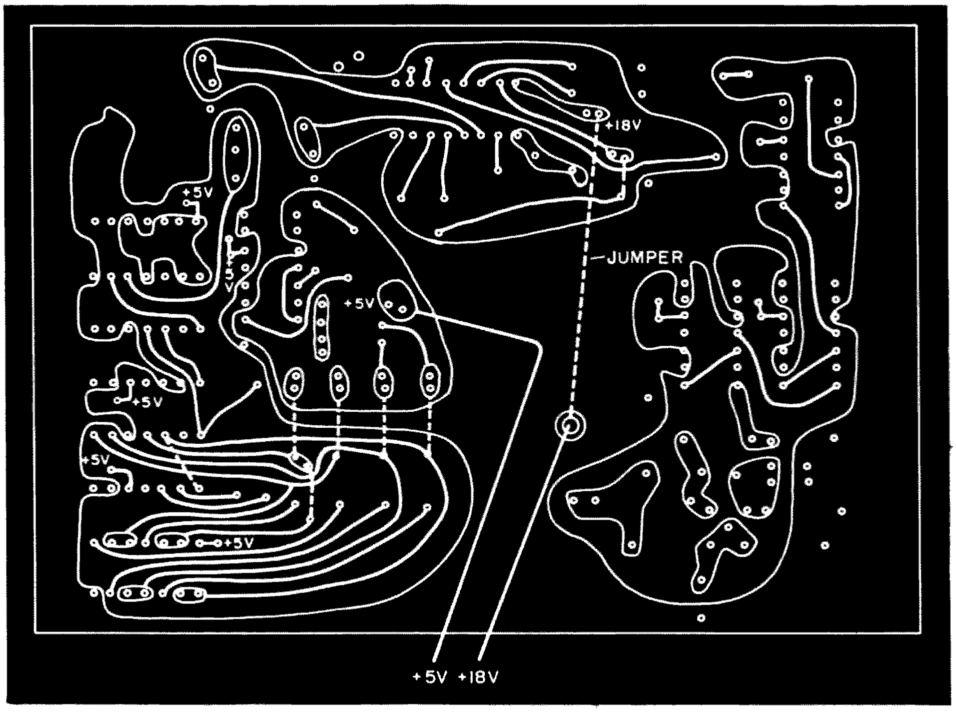

Fig. 6. PC board.

C1	300 pF
C2	150 pF
C3	100 pF
C4	68 pF
C5	50 pF
C6	43 pF
C7	39 pF
C8	33 pF
C9	30 pF
C10	27 pF

Construction

Except for the power supply and divider-frequency switch, all the parts are mounted on the 3-7/16" x 5" etched PC board. Holes are provided on the board for all the wires going to S1. Sockets can be used for all the ICs to simplify troubleshooting, if necessary, or they can be hard wired to the board. I used the Molex terminals available at electronic stores.

They're inexpensive and are satisfactory sockets. Holes are also provided to strap all the IC power connections. Use magnet wire. Several circuit jumpers are also needed as shown on the parts layout. C1 – C10 should be mounted right on the switch (S1), with all the common points brought together in the center. Run a wire to the circuit board.

Final Checkout

Before applying power, check that all the jumpers are in and the ICs are mounted in the correct positions. Set the frequency switch to the 1 MHz position. After you're sure everything is OK, apply power and check that the supply voltages are present. +18 volts should be at the junction of R14 and C24. R14 can be changed to make it +18 volts. +5 volts should be at the zener diode. A counter would come in handy here for the following check but a scope will do. A triggered scope is even better. At the junction of C14 and R5, there should be a 10 kHz square wave approximately 3 volts peak to peak. This one point checks that the oscillator is working and also the divider chain. The same wave shape should be at the junction of C21, R12. If it is, the loop is locked at 1 MHz .005%. Repeat the above for each position of the frequency switch. If you reach a position where both wave shapes are not the same, check the switch wiring of the programmable divider. If it's alright, you'll have to adjust the tuning capacitor for that particular channel. Calibrate the scope using the reference 10 kHz signal. Display one square wave for 10 cm on the scope (junction C14, R5). Move the probe to the junction of C21, R12 and adjust the tuning capacitor until the same wave shape appears.

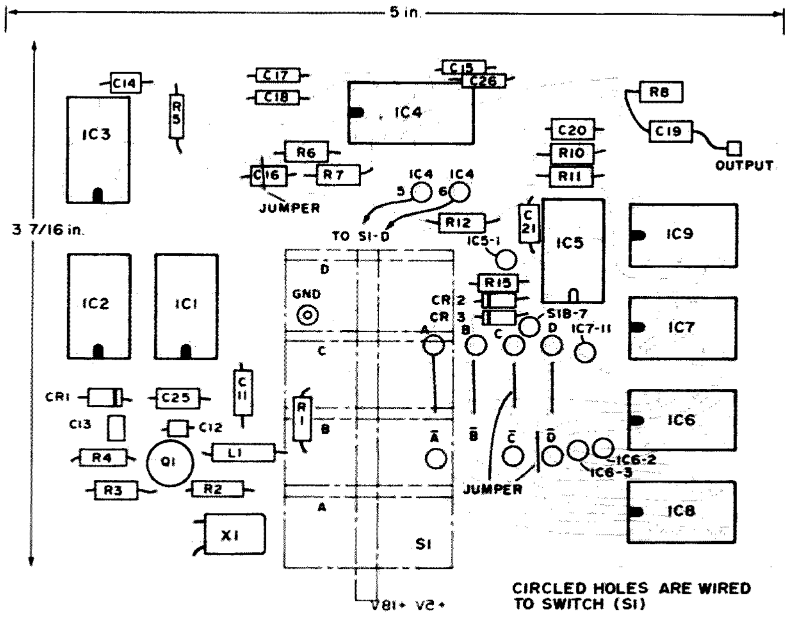

Fig. 7. Parts layout.

If the output is to be used as a "clock" to drive TTL circuitry, the circuit in Fig. 8 is suggested.

Use low capacity cabling on the output if you're going to run it any distance to preserve the wave shape. With the front panel switch in the 2 MHz position, a symmetrical 100 kHz signal is available on the front panel for calibrating communication receivers; simply couple the output (loosely) to the antenna input. ■

Miscellaneous Parts List

3½" x 5" copper clad board
Aluminum box
Line cord
On-off switch
Connector
Misc. hardware
ICs available from: B&F Enterprises, 119 Foster St., Peabody MA 01960; or Solid State Systems, P.O. Box 773, Columbia MO 65201.

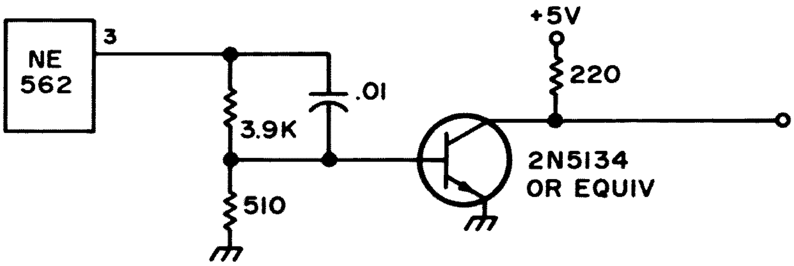

Fig. 8. Output circuit to drive logic. (Note: Circuit from Signetics Handbook.)

You Can Make Photo PC Boards

by
John Harrington
5132 Marcella Avenue
Cypress CA 90630

Construction of high-quality printed circuit boards, unfortunately, has never been a simple matter. Over the years, having made hundreds of boards, I have tried many methods, some simple, some complex, some cheap, some expensive, with varying degrees of success. The method described here has been in use for over a year now, and I am very pleased with the results. It allows me to make any desired number of high-quality boards with minimum expense and effort. Although there is nothing "new to the art" here, the method described for making negatives is one which I haven't seen described in amateur literature.

The steps to follow to make the boards are as follows:

1. Make up the "master artwork."
2. Prepare a negative from the artwork.
3. Clean and photo-sensitize the copper-clad board.
4. Expose the board through the negative.
5. Develop the exposed board.
6. Etch the board.
7. Plate the board if desired for corrosion resistance and appearance.

Don't let the imposing-looking list above discourage you – each step, in itself, is simple, and with reasonable care, is goof-proof. Let's take the list one at a time.

Preparing the Artwork

Start with a generous size sheet of transparent mylar or acetate sheet, about a centimeter bigger on each side than the size of the board you wish to make. If you are copying a published circuit which has full-size layouts, just stick the mylar down with masking tape over the published circuit. Then, using either india ink or commercial prepared patterns and tape, trace the circuit onto the mylar. If you are designing your own layout, tape the mylar sheet down on a piece of grid paper with 1/10" line spacing. This is very helpful as a device to keep your lines straight, and keep the component spacing and layout optimum. Most ICs and many other parts use lead spacing which are multiples of 1/10 of an inch – the grid paper makes it easy to locate component leads precisely on the layout. I use commercially available opaque sticky tape for conductor lines and component pads. Try to arrange the components to minimize the number of crossovers – sometimes a simple re-arrangement will eliminate several cross-overs.

When the layout is finished, check it against the original artwork or schematic to be sure it is correct. Don't overlook the fact that your layout is a *bottom view* of the

completed PC board, so your component pins must be connected properly for a bottom view. Be particularly careful with ICs – the manufacturer's drawings generally identify leads with a top view. I find it very helpful to redraw the IC on a scratch pad showing the bottom view of the pins and refer to it while drafting the circuit. This really helps when you are trying to cram ten or fifteen 14 or 16-lead ICs in a small layout. If you find you have made a mistake, just peel off the incorrect pattern and stick down a new one. If you are using india ink and wish to change the circuit, the easiest way I have found is to stratch off the incorrect part with the blade of a sharp knife, being careful not to damage the mylar. Then, redraw the circuit.

Preparing the Negative

To do this operation, we will expose some photographic film to light through the artwork. This is a darkroom technique, so it needs to be done under a "safelight." A safelight is simply a common lamp with a filter over it which only allows certain colors to pass through. These colors are chosen for their wavelength; the film we will be using is relatively insensitive to red light. Therefore, we can use a red filter and illuminate the work area without danger of ruining the film.

In use here is an inexpensive safelight holder with a Kodak 1A filter, and a 25W household bulb. With this mounted over the work area, it will provide plenty of illumination to clearly see each operation.

Inexpensive lithographic black and white film is used for several reasons. It is a relatively "slow" film which means it takes more light for a longer time to expose; therefore, it is much more forgiving of errors such as outside light leaking into the darkroom or overexposure. This type of film is especially designed for high contrast. Also it is easy to obtain this film at most any photo supply shop, and the cost for a piece of 10.1cm x 12.7cm (4" x 5") film is about 10¢.

Exposing the film is best done in a "contact frame." This can be as simple as sandwiching the artwork and film between a piece of flat black paper and a piece of clear glass. The glass serves only as a weight to hold the artwork and film in close contact to keep light from leaking under the black portions of the artwork. A more elaborate contact frame can be constructed or bought, but will only make the work more convenient, not better. I use a 150W flood light for exposure at a distance of 61cm (2'), and a 2-second exposure time, using my wrist watch and my finger on the light switch for timing. The two chemicals for development can be bought at the same store as the film. The developing bath I use is a 2-part solution which is mixed together in equal quantities just before use; the unmixed solutions can be stored for long periods without degradation. The "fix" solution can even be reused over and over again, by storing it in an air-tight bottle, but it is so cheap that I use fresh solution each time. The developing bath, however, must be discarded after a couple of hours use, as its performance degrades rapidly with use. Follow the manufacturer's directions when mixing the chemicals from the packages. You will need three developing trays, of a size sufficient to hold the film under the solutions. These are generally shallow black plastic trays and are very inexpensive.

Prepare the trays as follows: line up the trays, side by side, about 15.5cm (6") apart. These trays, from left to right, are for developing, washing and fixing. Pour equal quantities of the 2-part developing solution into the developing tray until it is about half full. Then half fill the wash tray with ordinary tap water. The fix tray is half filled with the fix solution.

Now we are ready to make the negative. Cleanliness is very important in any photographic work – dirt or dust smears can show up on your completed work. Turn on your safelight and extinguish all other lighting. Open the package of film and carefully open the light tight inner container. Take out a piece of film and immediately close up the package again so you won't forget later. Take a good look at the piece of film, handling it only by the edges. You will notice that one side is shiny, while the other

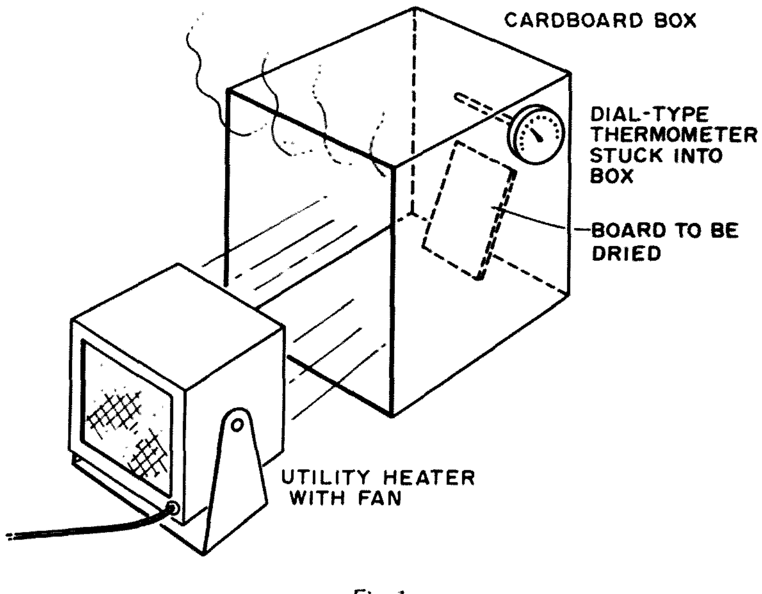

Fig. 1.

ARTWORK AND PHOTORESIST MATERIALS

1. G. C. Electronics, 400 South Wyman St., Rockford IL 61101, offers a free catalog of the full G. C. line of components and chemicals.
2. Bishop Graphics, Inc., 7300 Radford Avenue, North Hollywood CA 91605 offers a catalog of drafting aids for quantity users.

Many ham-oriented electronics supply houses have G. C. displays with all necessary materials to make everything except the negatives.

Ferric chloride can be obtained in gallon quantities at many electronic or chemical supply houses.

Hydrochloric acid for etchant rejuvenation can be obtained from chemical suppliers or drugstores.

has a dull finish. Place the dull side down in your contact frame. Then put your artwork down on top of the film, centering it carefully, and place the clear glass cover down on top of that. Expose for approximately 2 seconds at a distance of about 61cm (2'). Open the frame and extract the film. Place the exposed film in the developing solution, shiny side up and rock the tray slightly to agitate the solution. After a few seconds, depending on the temperature, you will see the image start to form on the film. When the image seems to be fully developed, wait another 10 or 15 seconds. Then reach in and grab the film by the edge and pull it out. Let it drip for a few seconds, and then, still holding it by the edge, slosh it around in the wash solution (water) for about 30-45 seconds. Pull it out, let it drip and place it in the fixer. Rock the fix tray slightly to agitate for about 5 minutes. After the first couple of minutes in the fix tray, you can turn the normal room lighting back on. The final step is to wash the completed negative off in warm running water for a few minutes and hang it up to dry. At this time, hold the negative up to the light and look it over. The black areas should be really opaque, and the clear areas should be perfectly transparent, with no smearing or fuzzy lines. A little experimentation with exposure and development times will optimize your particular setup. Frankly, I was amazed at how easy and non-critical this process is, using lithographic film, compared to the elaborate setups used to expose and develop high-speed color film that requires total darkness, careful temperature control and precision timing of various steps. My workshop is in my unheated garage, and I have made beautiful negatives when the ambient temperature was as low as 60°F. The chemicals work a little slower at low temperatures, so just develop slightly longer.

Sensitizing the Copper-clad Board

While ready-made photo sensitized boards can be purchased, it is much cheaper to do it yourself. The photoresist is made by many different companies, but about the most convenient and easily obtained is a spray can made by G.C. Electronics. This resist is most sensitive to the ultraviolet portion of the light spectrum, so a common yellow "buglight" can be safely used for the safelight. Also you will need some means of drying the board after cleaning, and after spraying on the photoresist. A simple forced air oven can be made by blowing hot air from a small electric heater into a cardboard box – this is the method I use, see Fig. 1. Monitor the temperature in the box with a thermometer. The first step is to thoroughly clean the copper-clad board. Scrub it with steel wool soap pads, using plenty of water, until the copper is bright and shiny. Test for cleanliness by letting water flow across the surface – dirt or fingerprints will make the water "bead" or "break." It is very important to have the copper surface clean to insure that the photoresist will adhere properly. After cleaning, and for all subsequent operations, handle the board only by the edges. Wipe the board with a clean, lint-free rag, and place it in your "oven" to dry. Dry for about 20 minutes at 100 to 115° F, then remove and let it cool to room temperature. The next steps must be done using only your yellow "bug" safelight for illumination. Lean the dry, clean board up against a newspaper backdrop and spray it well with the photoresist. Get on a good, thick coating and be sure to cover the complete copper surface. Daub off any excess on the bottom edge of the board, and place it into the oven, leaning vertically against the back wall. It is important to dry the photoresist quickly, as airborne dust particles will stick to the surface until it dries. Dryout will take about 15-20 minutes at 100 to 115° F. Do not overheat the photoresist as this will destroy its properties.

Exposing and Developing the Board

While the photoresist is drying in the oven, get your contact frame ready again. The G.C. photoresist instruction calls for exposure using ultraviolet or sunlight, but I get good results using the same 150W photoflood lamp as is used for exposing the film. Since the resist is not as sensitive to this light as to ultraviolet, it takes longer to properly expose.

Place the coated board in the contact frame, and center the negative over the top. Cover the top with the glass. Expose the board for about 8 minutes at a distance of about 30.5cm (1'). After exposure, plunge the board in the G.C. developing solution for about a minute, using slight agitation. The image should form quickly as the unexposed resist washes off in the solution. Pull the board out and let the solution evaporate for

a few minutes. The normal room lighting can come on now, as the board is no longer light-sensitive. Rinse the board off with warm water and dry it with a soft cloth, using a blotting motion. Look the board over very carefully to make sure the pattern is complete, and has no pin holes or breaks. Defects are generally caused by a lack of cleanliness. Touch-up can be done with a resist pen, if necessary.

Etch the Board

My favorite etchant is ferric chloride, which can be "rejuvenated" and used over and over. I use a large plastic dish about 20.4cm (8") square and 10.2cm (4") deep about 2/3 full of the ferric chloride. Heat speeds up the etching rate, so a glass aquarium heater is immersed in the solution to heat it to about 100°F. CAUTION: Never use any aluminum around ferric chloride as it reacts very violently. In fact, it is best to keep any metal away from your etching tray. To further speed up the etching process, you may use air from a small aquarium pump to "bubble etch" the board. Immerse a large aquarium aeration stone in the solution and float the board on the surface, face down. The pump air bubbling up from the stone through the ferric chloride etches the board very rapidly. A fresh batch of ferric chloride, using bubble etching, will completely etch a board in about 5 minutes. After repeated use, the etchant becomes saturated with all the copper it has dissolved until it finally refuses to etch away any more copper. Some of this copper can be removed from the solution by the addition of muriatic acid (hydrochloric).

Carefully add about 2 fluid ounces of the acid per quart of ferric chloride, and let air bubble up through the solution for 12 to 24 hours. This will rejuvenate the etchant enough to make it very active again. When it again becomes saturated, simply repeat the rejuvenation. The solution gets darker and darker each time, but I have observed no adverse effects. I can't say how many times this rejuvenation can be successfully carried out, since I have been using my present gallon for almost two years. I have added about a quart of muriatic acid over this period, and it is still going strong. I owe this idea, and the bubble-etching technique, to Larry Hutchinson, who had an excellent article on the subject in the September, 1971, issue of Ham Radio.

After etching the board, rinse it thoroughly with running water. Strip the resist from the unetched areas of the board with acetone which is much cheaper than most commercial stripping solutions. Saturate a small piece of cloth with the acetone and scrub off the resist, then rinse again with water and dry.

Final Touches

If desired, the board can now be trimmed to size, drilled and the components soldered in. However, a much better looking board can be made by plating the copper with a tin lead compound. This not only makes the board much easier to solder, but also insures the copper surface will not corrode. I use an electroless plating solution made by The Dynachem Corporation, Number EBS-250. To use, heat some of the solution in a pyrex dish to about 140° F on a hotplate. Dunk the board in, and in about 20 minutes the plating is complete. The coating is not very thick, only about a tenth of a mil, but is plenty for our purposes. The Shipley Company in Newton MA also makes a product called LT-27 immersion tin, but I have not tried it. After plating is completed, rinse the board in hot water and dry. You now have a high-quality printed circuit board which can be duplicated easily and exactly by reusing your negative. Be sure to store your negatives and artwork where they will not become dirty, scratched or otherwise damaged. I put mine in manila envelopes and store them in my card file.

Conclusion

The techniques described above represent the optimum answer in my case to the tradeoffs between cost, complexity and quality. My boards now rival commercial boards in appearance and repeatability.

However, some features of commercial boards are either too expensive or complex at this time to duplicate in the average home workshop. For instance, plated-through holes, multi-layer construction, wave soldering and spray etching. In addition, making double-sided boards, although I have done it, is still too difficult and time-consuming to justify in most cases. I am still looking for cheap and simple solutions to the above problems. In the meantime, try it my way – you'll like the results. ■

PHOTOGRAPHIC MATERIALS
AVAILABLE AT PHOTO SUPPLY SHOP

Film

1. Naccolith Type "P" 25-10.1 cm x 12.7 cm (4" x 5") sheets for approximately $2.50.
2. DuPont Cronar Engineering Reproduction Film 50 – 10.1 cm x 12.7 cm (4" x 5") sheets for approximately $5.00. Also available in larger sheets which can be cut to any desired size.

Film Safelight

Any type – with a 1 A filter – use a 25 – 40 W bulb.

Film Developing

1. DuPont 21D or 24D Litho Developer
2. Kodak Developer

Film Fixing

1. DuPont 18-F Universal Fixer
2. Kodak Universal Fixer

Adding An Ammeter to Your Car

by
W. J. Prudhomme WB5DEP
1405 Richland Avenue
Metairie LA 70001

In an effort to simplify the operation of automobiles, most car manufacturers have, for many years, incorporated an "Alternator Indicator Light" on the instrument panel in lieu of the ammeter of days gone by. While this "Indicator Light" requires less attention while you are driving, it does not give you complete information on the state of your electrical system.

A recent experience with my car brought this fact to light and convinced me that my car should have an ammeter. Over a period of weeks, I was unaware that the output of my alternator was steadily deteriorating and not charging the battery properly. Eventually the battery completely discharged and left me stranded away from home. The outcome from the experience was that I had

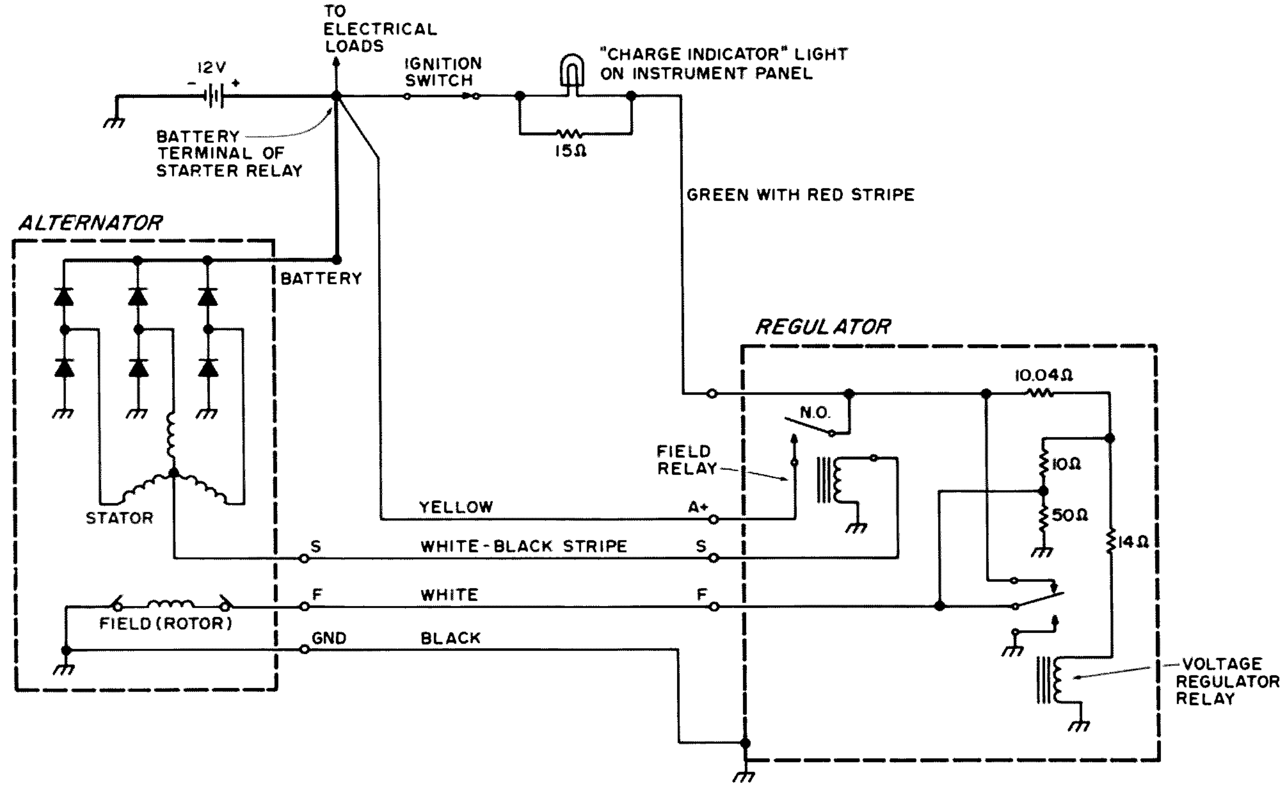

Fig. 1. Ford electrical system with electromechanical type regulator. (Other electrical systems are similar.)

to install a new alternator and I came very close to completely ruining a relatively new battery. During the entire time that the alternator was failing, the indicator light on the instrument panel would turn off during normal driving indicating that the alternator was "charging" and apparently, according to its indication, there was no problem. It occurred to me from this experience, that it would be better to have some type of indicating ammeter which would indicate the state of the system as to whether the battery was being charged or discharged. This article describes a method of installing an ammeter into your existing automobile system without any changes or modification to the existing system and at a very low cost. In fact, it is so easy and inexpensive to incorporate it into your system that you shouldn't be without one, especially if you operate mobile radio equipment which adds an additional drain to your car battery.

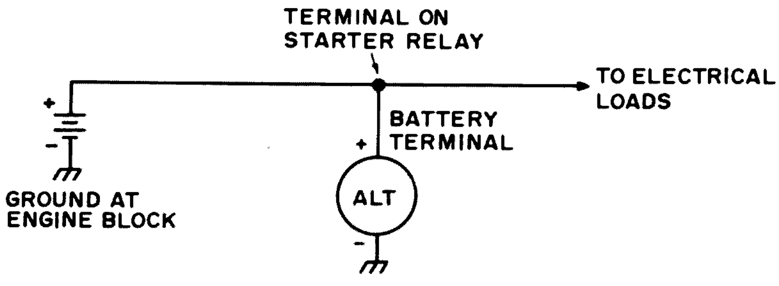

Fig. 2. Simplified diagram excluding the regulator.

Advantages

The system I am about to describe has several advantages which make it attractive for an amateur to install in his car. These advantages are:

(1) All leads are at ground potential, so there are no problems with shorts in the system or the necessity of fusing the conductors.

(2) No heavy currents pass through the indicator, so small conductors may be used.

(3) Although the system makes use of shunt resistance to measure the current, a unique method is used so that no additional voltage drops are added into the present electrical system.

(4) It is very easy to add to your existing electrical system – no changes in existing wiring.

(5) The ammeter circuit can easily be adapted with a switch and resistor to read system voltage.

(6) It is inexpensive to install and depending on the type of meter movement you install, the cost can range anywhere from $1.50 to $7.00.

With these advantages, I feel certain that more amateurs will want to install an ammeter to their car electrical system to monitor the battery charging rate.

Typical Electrical System

Referring to Fig. 1, a diagram for Ford Electrical System is presented. This system incorporates an electromechanical voltage regulator and is the type used in my own car (although other systems such as General Motors are similar). As you can see, the alternator consists of a stationary 3Ø stator winding in which the output goes to a set of diode rectifiers. These diodes are arranged in such a manner that the output at the battery

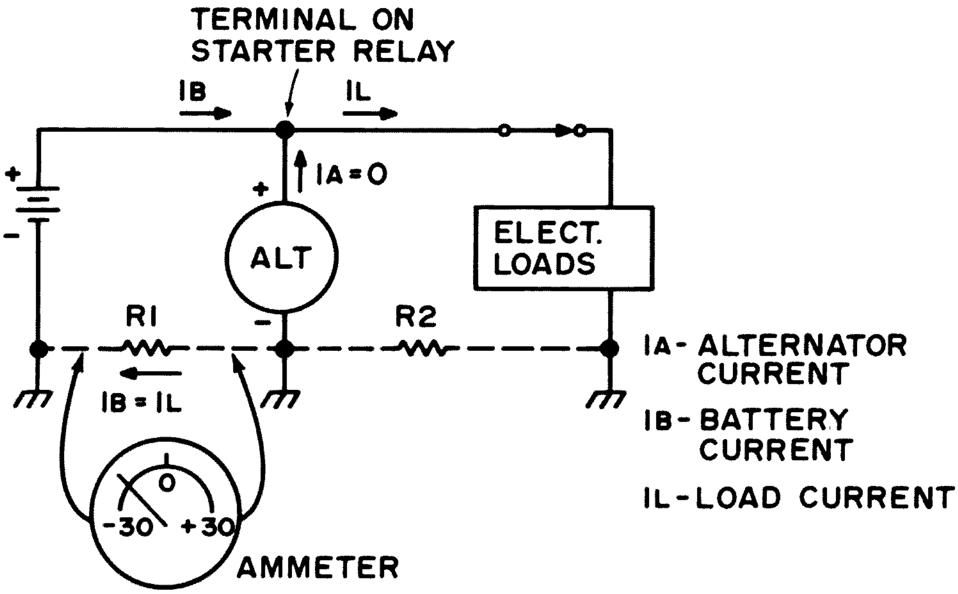

Fig. 3. Basic electrical system showing resistance in ground path circuit – discharge condition (engine stopped and electrical loads connected).

terminal of the alternator is always positive. There is a rotating field which excites the stator winding during normal operation. As you can see, the alternator is always connected directly to the battery through a terminal block, and it is at this point that the other electrical loads in the car are connected. The neutral from the stator winding is grounded through the field relay winding in the voltage regulator and its contacts are normally open. When the ignition switch is turned on, a certain amount of voltage from the battery is connected directly to the field through the charge indicator light on the instrument panel. After the engine is started, and the alternator is producing current, the stator current flowing through the field relay winding pulls the contacts down which in turn bypasses the indicator light on the instrument panel. In other words, as long as the alternator is producing current of sufficient magnitude to hold the field relay contacts closed, the charge indicator light will be off, indicating that the alternator is producing current.

This system works fine as long as all elements in the system are operating under normal circumstances. However, as long as the alternator is capable of producing enough current to operate the field relay contacts, the charge indicator will be extinguished although there may not be enough current produced to charge the battery. Under these circumstances, the charge indicator light does not give a true picture of what is happening in the system, and it also does not indicate the amount of discharge or charge condition of the battery.

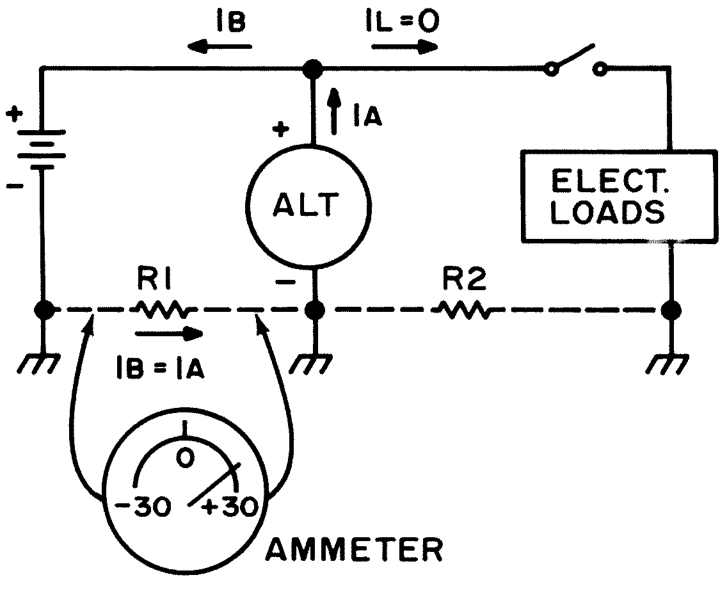

Fig. 4. Charging condition — engine running with electrical loads off.

Referring to Fig. 2, I have indicated a simplified diagram of the battery-alternator connections without the regulator or field windings shown. As you can see, the alternator is continuously connected to the battery and to the other electrical loads usually at the terminal of the starter relay. During normal operation of a car, the alternator performs two functions. First, it produces enough current to operate the electrical loads in the car and second, it produces current to flow back into the battery to charge the battery during normal driving conditions. There may be a time when a faulty alternator does not produce enough current to do both, and it is under these circumstances that you may end up with a dead battery and no forewarning of that condition.

Also, from the diagram, it appears logical that the correct location for a charge indicator would be somewhere in the battery circuit, either between the positive terminal on the alternator and the positive terminal on the battery, or between the negative terminal on the battery and ground. This indicator should have a zero center scale so that it would indicate a discharge condition (battery drain) or indicate a charging condition from the alternator. The usual method of connection is to add some type of shunt into the system in order to sample the amount of current flowing in the conductors to provide an indication. However, if a shunt is added into the circuit (such as the ¼ Ohm shunts which are used on most automotive ammeters you can purchase at a store) you incorporate an additional voltage drop into the system. By accident, I determined a unique feature of automobile systems which you can make use of in what I call a built-in shunt condition.

Ground Paths

Referring to Fig. 3, I have indicated a simplified electrical diagram showing electrical loads connected to the system. This is a discharge condition in that the engine is stopped and there is no output from the alternator. Since the alternator remains connected to the system, it would appear that some drain would also result from the alternator. However, keep in mind that the alternator windings are connected to the positive terminal through diodes, and therefore, no reverse current can flow through the alternator. Under this condition, the alternator current $I_A = 0$. Applying Kirchhoff's Law which states the sum of the currents entering a junction is equal to the sum of the currents leaving the junction, we have the battery current I_B entering the terminal and the load current I_L leaving that junction.

Since the alternator current is equal to zero, $I_B = I_L$, or simply stated, the battery is supplying all of the required power to operate the load.

Let's discuss for a minute the theoretical versus actual conditions. We normally think of the negative terminals of the battery, alternator and loads all being grounded together so that all negative terminals are at the same potential. However, in most cases, we are depending on the frame of the car as a ground return path, and since steel is a mediocre conductor, there is always some inherent resistance incorporated into all automobile electrical systems. I have represented this resistance as being R1 between the battery negative terminal and the alternator negative terminal and R2 between the alternator and the electrical loads. Applying Ohm's Law, the voltage drop across R1 would be:

$$E = (I_B)(R1)$$

Granted, the resistance of R1 is small, in the neighborhood of 0.01 to 0.1 Ohms, but the currents are very large – in the neighborhood of 10 to 30 Amps (except during starts when it is much higher). Consequently, the voltage drop across R1 is a measurable quantity and can be used to indicate which way the current is flowing in the battery-alternator loop. This is shown on the meter in Fig. 3 as a discharge situation.

Fig. 4 is a diagram of a basic charge condition in which the engine is running and no loads are connected. Again, applying Kirchhoff's Law with $I_L = 0$ we have: I_B is equal to I_A, and the voltage drop across R1 is $E = (I_B)(R1)$, but is of the opposite polarity of the discharge condition in Fig. 3. As the battery becomes charged, the alternator current charging the battery gradually tapers off and so will the voltage drop across R1 so we get a direct indication of the condition of the battery, and we know exactly when it has reached full charge condition.

In Fig. 5 we have a diagram showing normal operation of the vehicle in which the engine is running and certain electrical loads are connected. Under this situation, again applying Kirchhoff's Law, we have I_B and I_L leaving the terminal and the alternator current, I_A, entering the terminal. Stated as an equation, $I_A = I_B + I_L$. This means that the alternator has to supply enough current to operate the electrical loads and charge the battery at the same time. Of course, as the battery becomes fully charged again, the battery current will gradually taper off, and the alternator will be operating mainly to supply current to the electrical loads connected to the system.

Ohm's Law Applied

It is apparent that there will be some voltage drop which can be measured across this ground path resistance, but just exactly how much will be measured and how can it be utilized in a charge indicator?

Let's take for example, that the ground path has a resistance of only 0.01 Ohms and that a typical alternator is capable of producing at least 30 Amps. The voltage drop across the ground path of resistance would then be:

$$E = IR = (30)(.01)$$
$$\text{Therefore, } E = 0.3 \text{ volts}$$

This voltage is easily measured and the instrument may be calibrated in terms of Amps, that is, 0.1 volts would indicate a current of 10 Amps.

If the normal charging rate is, for example, 10 Amps, the voltage measured would be 0.1 volts. From this example, it is clearly evident that there is plenty of voltage available for a sensitive indicator and can be used to our advantage in a charge indicating instrument without adding additional shunt resistance into the electrical system. Our next problem is to determine how and where to connect the meter in the circuit.

Basic Ammeter Circuit

Fig. 6 shows the actual circuit used in my car with a 50 uA meter. This instrument, as with most instruments (even the very inexpensive tuning indicator instruments) can be converted to a zero center scale instrument so that my meter now has become a ±25 uA meter. I also installed a meter protector circuit across the terminals to limit the current during starting, and added a 2k

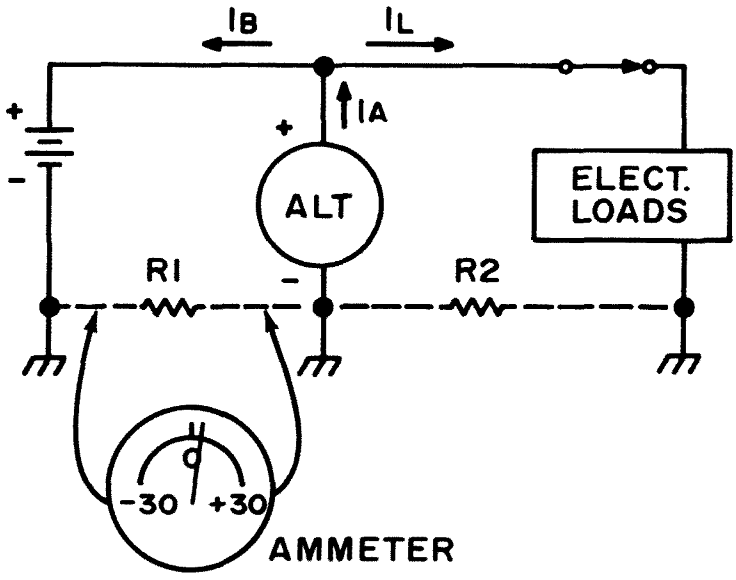

Fig. 5. Typical operating condition with battery charging current tapering off.

resistor into the circuit to allow for calibration of the meter.

As I mentioned, the basic movement that I used was a 0-50 uA meter manufactured by Midland, Model No. 23-206. However, any meter may be used, possibly up to a 0-1 mA meter, depending on your own particular situation. You may want to use a VOM to check your particular ground path circuit under normal conditions to find out how sensitive a meter movement will be required in your particular case. After this has been determined and you have a meter available,

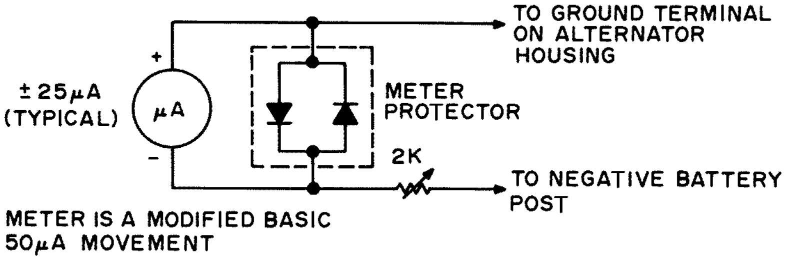

Fig. 6. Actual diagram for adding an ammeter to car electrical system — no changes are required to existing wiring.

the next step is to carefully remove the plastic cover on the meter. Then, after removing the two retaining screws of the dial, it must be carefully slipped out from under the pointer. Then, all that is necessary is to erase the lettering not required and to add in new lettering according to your own particular circumstances.

The next step is to convert the instrument to a zero center scale type instrument. This is easily accomplished by moving the zero adjustment until the pointer is at mid-scale. It is possible to do this on all instruments that I have seen, including the little horizontal movements that are available through surplus outlets for a dollar and a half. The quality of the instrument is governed only by your own particular needs. The final step is to replace the dial and plastic cover and install the protective diodes across the meter terminals along with the multiplier resistor used for calibration.

Installation Details

The next step involves installation in the car and connecting the meter leads to the proper points in the electrical system. It is best to use solid conductor wire of approximately 18 gauge, and if you can find Teflon-coated conductors, so much the better. Since the leads will be near hot parts of the engine, Teflon-insulated conductors are more resistant to heat and grease in this type environment. The two leads from the instrument circuit should be routed through any available opening in the fire wall and around to the alternator and negative terminal of the battery. One conductor is connected to the ground terminal on the alternator housing. The other conductor is connected to the negative battery terminal right at the battery post. To check to see if you have the right polarity, leave the engine off and turn on some load such as headlights or press on the brake pedal. The instrument should swing from the zero center scale to the left indicating a discharge condition. If it swings the other way, the leads should be reversed. The next step is to get a rough calibration on the instrument. Turn on headlights or some other load with a known Amp rating and roughly calibrate the instrument based on this amount of load. If you have another ammeter, you can use it to check and calibrate your new instrument.

It is imperative to connect the ammeter circuit into ground path R1 between the battery negative terminal and the alternator ground terminal. Otherwise, if by mistake it is connected between the battery negative terminal and ground near some of the electrical loads, it is easy to see from the basic diagrams above that you would get roughly twice the indication on discharge which is the sum of the voltage drops across R1 and R2 in a discharge condition. In a charge condition, the indication will be the difference between the voltage drops across R1 and R2 since the voltage drops are in opposite directions. This obviously will give you false indications and will be useless as far as determining the state of charge of your battery.

Conclusion and Results

You are probably wondering at this point as to whether or not it would have been easier to buy one of the commercially available ammeters for six to ten dollars and not have the problem of converting another meter for use in this project. It is true it may have been easier, but the meter movement in commercial automotive instruments is not known for its quality and there are usually no means of calibrating the commercial instrument. Also, most commercially available instruments make use of an additional meter shunt into an electrical system of approximately ¼ Ohm. Admittedly, this is not very much resistance to add into a circuit, but a quarter Ohm at 20 Amps could introduce an additional voltage drop into the automobile electrical system.

My particular charge indicator has been in operation for some time, and it has been a great help to me in monitoring my automobile electrical system. Since many amateurs have mobile equipment added into their cars, I hope this article will be of benefit to them in keeping their equipment in top operating condition. ■

Really Soup Up Your 2m Receiver

by
Calvin Sondgeroth W9ZTK
800 Fifth Avenue
Mendota IL 61342

Using semiconductors now available for VHF service it is possible to build a preamplifier for 144 MHz that will perform as well or better than all but the best vacuum tube designs in terms of gain and noise figure. The solid state approach offers several advantages over a vacuum tube amplifier in size and power requirements. The preamp described is completely self contained and can be powered for many hours by a small transistor radio battery. In addition, semiconductor prices are now about one fourth the cost of a new vacuum tube for the same job. The money saved by using the transistor can be well spent on a couple of good quality components for the rest of the circuit.

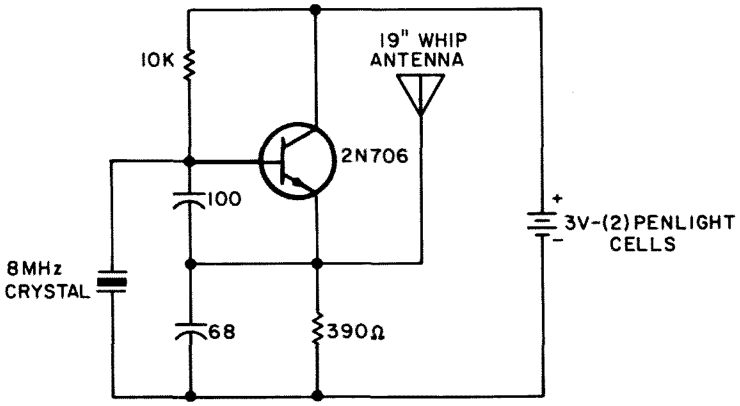

Fig. 1. 144 MHz weak signal source.

Circuit Description

The circuit for the preamp is shown in the schematic diagram. Q1 is operated in a grounded base configuration for best stability at 144 MHz. The input impedance of this type of amplifier is quite low and the emitter is tapped down well toward the ground end of the input coil L1 compared to the tap position that might be used in a tube amplifier. The emitter is raised above ground by R2. A choke in the emitter lead with R2 bypassed for rf was tried, but the amplifier seemed to work as well with R2 alone, so the choke was abandoned. The input and output coils L1 and L2 are identical except for the second tap on L1. They are wound with #18 bus wire with 4½ turns spaced out to ½" long. Both input and output tanks are tuned to resonance with piston type trimmer capacitors. Here is where the money saved on buying a new 417A tube or its equivalent can be put to good use. The price difference between the tube and transistor will just about pay for two good quality capacitors. The piston tuning action makes circuit adjustment very smooth.

The bias operating point for the amplifier is set by the voltage divider R1 and R3; the value of R1 is adjusted for optimum gain versus noise figure as described later.

Construction

A pictorial drawing of the mechanical layout of the amplifier is shown. A standard

1-5/8" X 2-1/8" X 3-1/4" minibox serves as a shielded enclosure for the finished unit. Q1 and its associated components are mounted on a piece of 1/16" thick copper clad circuit board material that just fits inside the box with clearance at the sides for the cover. The transistor is mounted through a 3/16" hole in the center of the board with a second piece of circuit board material soldered vertically across it to act as a shield between the input and output circuits. The shield has to be notched to clear the transistor leads with the emitter and base leads on the input side and the collector and the fourth lead connected to the transistor case on the output side. The case lead is soldered directly to the ground copper on the center shield.

Two 500 pF feedthrough capacitors serve as the points for the base and the B+ leads; two insulated terminals are used for the emitter and collector connections. The bias resistors R1 and R3 are mounted on top of the board as shown for ease in adjusting their values. The emitter resistor R2 could probably be on top as well, but I thought it best to keep it down inside the shielded input compartment since it is above rf ground. The piston trimmers are located approximately as shown with the coils connected to them as indicated on the schematic. This general layout makes for the short leads important in VHF wiring. Ground connections are soldered directly to the copper on the circuit board.

After the circuit is wired up on the board it is mounted inside the minibox as shown with two standoffs and screws in diagonal corners. Two dummy screws in the other corners act as feet to match the screws going through the standoffs. The four resulting studs can be used for mounting to another chassis if desired. The input and output connectors J1 and J2 are mounted on the ends of the box. The output end has a 500 pF feedthrough capacitor and a ground terminal for connection to an external battery.

Adjustment and Tune-up

For preliminary adjustment of the preamplifier, connect a 5000 to 10,000Ω potentiometer in the circuit in place of R1. Tuning is done on a weak signal. If your location is like mine there will either be no signals at all or those present will be weak, so for extended periods of adjustment a local signal source is desirable. A grid dip meter can be used, but the stability of a crystal oscillator like the one shown is much better. Its harmonic in the 2 meter band is fairly strong and the signal source can be removed from the receiver location until the signal is just readable without the preamp ahead of the receiver so that improvements with the preamp connected can be noted.

With the amplifier in the line and the bias adjust pot approximately in the center of its range, the weak signal is tuned in and C1 and C2 are adjusted for maximum signal. With the tanks peaked, adjust the bias pot for best improvement in signal over the noise output of the receiver. Remember that what we are looking for is best margin of signal over the noise and not maximum S-meter or other output meter indication. In general a bias point where the noise output of the receiver just starts to increase is optimum. Increasing the voltage at the base of Q1 too much beyond this point increases the noise output of the amplifier, and a point is reached at which the increase in gain obtained is not enough to make up for the poorer noise figure of the system.

When the pot has been set for optimum performance its value is measured and replaced by a suitable fixed resistor. Values from 2000–4000Ω can be expected with the 2N2708 specified. Two holes are added to the minibox cover for access to C1 and C2 since putting on the cover detunes the input and output circuits slightly and they must be retuned with the cover in place.

Conclusions

The transistor specified was used because it was available. It is rated up to 200 MHz with a gain of 15 dB and costs a little under $3.00. Other RCA transistors in the same family should work just as well. For example, the 2N4936 is rated at 20 dB gain up to 450 MHz and is even less expensive than the 2N2708.

For simplicity, and improvement in two meter work, this kind of device is hard to beat . . .

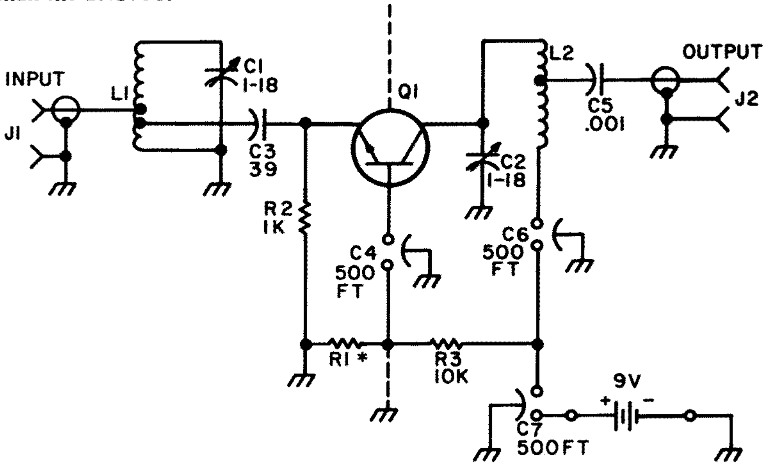

*Fig. 2. L1 – 4½ turns #18 3/8" diam x ½" long; tap at 1 turn for emitter; tap at 1½ turns for input. L2 – 4½ turns #18 3/8" diam x ½" long; tap at 1½ turns from B+ end. Q1 – Ep. F1. NPN silicon transistor, 2N2708. C1, C2 – piston trimmers. J1, J2 – BNC coax connectors. *Adjust R1 for optimum gain vs. noise figure.*

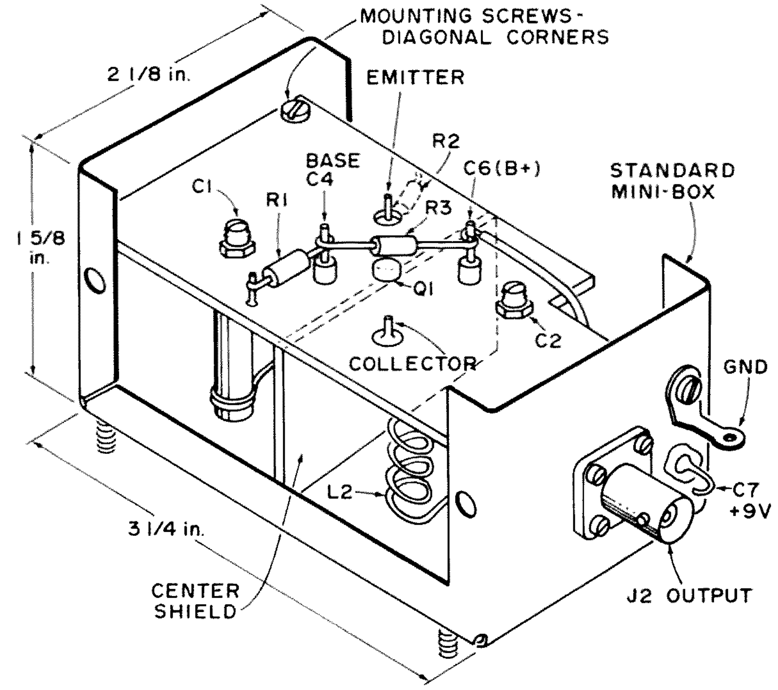

Fig. 3.

The preamp should help out considerably when used ahead of a poor receiving setup on two meters. It will not do much ahead of a good low noise converter since the noise figure of the preamp will degrade the overall performance of the system. When tried on a W2AZL 417A converter all it did was make the S-meter readings higher; reception on weak signals was about the same with or without the preamp. However, ahead of the "twoer" or other marginal two meter receiver, the preamp adds the gain needed for copying weak signals.

No trouble with instability was encountered, although with very high stage gain the circuit can start to oscillate. With a bias setting this high, the noise output of the amplifier makes it practically useless; at normal operating bias as adjusted above the circuit is quite tame. The isolation between input and output is very good since the circuits are effectively in separate enclosures formed by the minibox, the circuit board and center shield.

For simplicity and improvement in two meter work, this kind of device is hard to beat. With a few parts and a spare evening, it can be put together and tried ahead of the receiver with a minimum of metal work and chassis drilling. And the best part comes when the battery can be used instead of digging into the receiver or another power supply. ■

How's Your Speech Quality?

73 Magazine Staff

The objective of speech processing has always been to obtain more "talk power" from a given transmitter. In the case of SSB, this has meant increasing the average to peak ratio of the af (and hence eventual rf) waveform.

In FM systems, it has meant limiting the maximum allowable deviation to not exceed the receiver passband. Compressors, clippers or combinations of the two methods are used to accomplish the desired effect.

One problem that often arises with simpler circuits is that an increased bassiness appears in the processed speech the more it is processed. The reason for this may not be apparent when one looks at the so-called frequency response of a compressor or clipper circuit as shown in Fig. 1.

The problem arises because the frequency response of the compressor or clipper circuit will change depending upon the input level. The response of Fig. 1 is plotted before any compressor or clipping action becomes effective and looks classically effective.

The low frequencies which contain most of the speech power but little of speech intelligibility are reduced in value and a gradual rising response to about 3 kHz gives emphasis to the higher frequencies which provide a "presence" effect in the speech.

If one plots the frequency response for different values of compressor or clipper action, as shown in Fig. 2, it will be seen that as the amount of compression or clipping increases, both the low and high frequency response of the output is extended.

The compressor/clipper action in most such circuits, which are not frequency selective, simply levels out the whole output over the entire speech frequency range. The harder one "hits" the compressor/clipper, the more pronounced is the effect. So, one can often not achieve the maximum value from such a circuit and ends up with a compromise setting of the circuit. This provides some increase in talk power without too much speech degradation.

Another problem also enters the picture – the problem of distortion due to the generation of intermodulation and harmonic

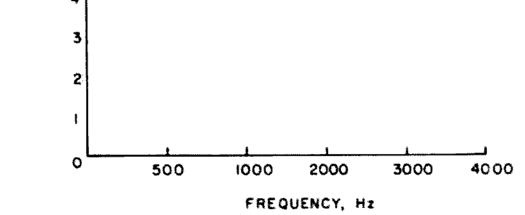

Fig. 1. (Black) Typical tailored voice frequency response of a speech processing unit at very low input levels.

Fig. 2. (Grey) The output level of a speech processor as the circuit is adjusted to clamp the output at different levels. Notice that as the output level is more severely clamped the overall frequency response becomes broad and flat.

products in the compressor/clipper circuitry the harder it is driven.

The latter problem will occur first in some compressor circuits and would tend to indicate that the input stages are not designed with a great enough dynamic range.

Sophisticated, and costly, compressor/clipper units get around some of these problems by splitting the frequency band to be processed into different ranges, applying a weighted processing to each range and other techniques. Broadcast quality, after all, just doesn't mean an ultra smooth frequency response but keeping that transmitter modulated within FCC specs just as heavily as possible.

Compare a recording of a good AM or FM talk station with that obtainable from any amateur speech processing unit. If the recording is made such that the peak input level to the recorder is the same in both cases, the tremendous difference in effectiveness of the commercial unit is apparent.

The point here is not to criticize amateur circuits since commercial units cost thousands of dollars and are part of an engineered microphone-to-modulator chain, but to indicate that much still remains to be done in the amateur sphere.

One improvement that can be made in most simple compressor/clipper circuits is to correct the frequency response to get away from the problem previously described.

Two methods are possible – either a dynamic circuit that will correct the input frequency response according to the amount of compression or clipping, or a static filtering circuit both before and after the compressor/clipper circuitry.

The author has experimented with active circuits using FETs as variable resistance elements in a 2 stage RC high-pass filter arrangement placed before the input to a compressor. The control voltage developed in the compressor was also used to control the FETs and in such a manner that the greater the control voltage developed (due to greater input levels), the frequency slope of the high-pass filter was changed to attenuate the lower frequencies more and more.

The circuit did work but every component had to be tailored to work with a particular compressor circuit. Therefore, since it is far from a universal approach the circuit details are not presented here.

A more universal approach involves the use of passive components to form a suitable filter both before and after a clipper or compressor circuit. The details of such filters are shown in Fig. 3 for typical low impedance input and output circuits. Standard handbook formulas can be used to design the filters for any desired combination of impedance levels.

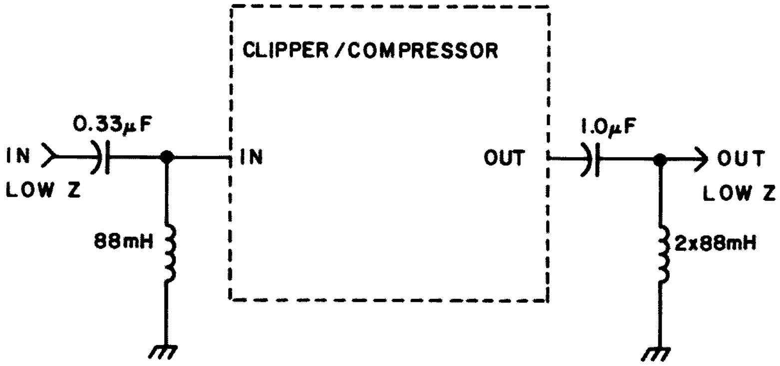

Fig. 3. Some typical circuit values for the filters discussed in the text.

The input filter performs a pre-emphasis function to reduce the low frequency to drastically reduce the low frequency components. It has a cutoff frequency of 800-1000 cycles.

The main purpose of this filter in reducing the low frequency input to a compressor or clipper is to reduce the inter-modulation products caused by the low frequencies, and which remain within the speech passband up to about 4 kHz. This will allow a greater degree of compression or clipping to be used. The output filter is a high-pass filter with a cut-off of about .3 kHz in order to provide the low frequency rolloff which is lost when heavy compression or clipping is used. In the case of a clipper, it is assumed that it already contains the necessary low pass filter to reduce the harmonic energy above about 4 kHz.

The filters have only a few dB insertion loss in their passband and so can be used with almost any compressor or clipper circuit which has just a bit of reserve gain. There are no particular construction problems with the filters. Standard surplus toroid telephone coils are highly recommended for the inductor elements and are inexpensive to use.

One might like to experiment with the rolloff frequencies of the filters by varying the capacitor values slightly to suit individual voice characteristics. The use of the filters will definitely enhance the effectiveness of most compressor or clipper circuits. It's accomplished both by allowing a greater degree of compression or clipping and by eliminating the low frequencies at the output of the processed speech which do not contribute to communications effectiveness. The enhancement of a transmitter's effectiveness by such speech filters in conjunction with a compressor or clipper is a matter of subjective evaluation.

Most tests indicate a 2-3 dB improvement. The component costs make this method quite a bargain – and beat raising the transmitter power. ■

A Transmission Line² Matcher

by
Carl C. Drumeller W5JJ
5824 N.W. 58 Street
Warr Acres OK 73122

That title may require some explanation. What it really means is that a length of coaxial rf transmission line is used to effect compatibility between the output impedance of a transmitter and the presented impedance of a transmission line leading to its antenna. Often, you effect such a match by means of an antenna tuning unit. The British call these ATUs. We use a variety of fancy terms, like "Z-matchers," "Transmatchers," "Matchboxes," etc. They all do the same job.

If the mismatch is not extreme, no more than you'd encounter with a VSWR of around 5:1, a section of transmission line can accomplish an acceptable match.

We've all been told many times of the application of a ¼λ section of line for impedance matching. Less often, however, have we heard about the use of other lengths for transforming impedance. That's the purpose of this article.

First, we need to take a look at a graphical representation of the voltage standing wave upon a mismatched transmission. This is often shown in handbooks. A few even hint at the reactances present. These reactances, which vary in both magnitude and sign (inductive or capacitive) as measured along a ½λ section of line, can be put to use. We're going to talk about using them as conjugate reactances, that is, of equal magnitude but opposite sign, to negate undesired reactances on an antenna feedline. Fig. 1 shows the extreme case of a line terminated in a short circuit. Fig. 2 depicts another extreme, a line terminated in an open circuit. Note that these two differ only by 90°. That is, if you were to slide one 90° to a side, it would be the same as the other. From this, you can deduct that *all* other terminations lie somewhere between these two extremes. So they do, regardless of whether they're purely resistive, purely reactive, mixtures of the two (as are most real-life antennas), higher than the characteristic impedance of the line, or lower.

Now, with this as a starter, let's take a look at the average transmitter. In all probability, it was engineered (probably much against the design engineer's better judgment but by the stern orders of the sales department) "to be used with transmission lines with a VSWR of not more than 2:1." This is choice weasel wording to give the manufacturer impunity should an inept user damage it by some gross misuse.

Let's consider why the manufacturer likes to include the weasel wording. Look at Fig. 1. Points A, C and E have an impedance that is purely resistive and very, very low. You couldn't make such a termination accept power. Points B and D also are purely resistive, but their impedance is very high. It's improbable that these could be made to accept power. In Fig. 2 the same comments apply, only with the high and low impedance points flipped over. But Fig. 3 shows a line terminated in a resistor, one higher than the line's characteristic impedance so that there're standing waves present. Not only are points A, B, C, D and E resistive, but there's a resistive component present at any point along the line. This means that you can slice off that line at any point you desire and still feed rf power to your antenna. But, there's a hooker. There always is. This one concerns all points between the lettered points. Anywhere in these regions the line will present a combination of resistive and reactive load.

The introduction of reaction gives the manufacturer more cold chills than do the excursions of impedance magnitudes. You see, within the transmitter there must be provision for transforming whatever complex load shows up at the transmitter's input terminals to a purely resistive load of the proper magnitude to produce the desired load for the active device (vacuum tube, transistor, etc.) in the transmitter. In most of today's transmitters this is done through transformations provided by a pi-network. Now, if you've ever looked at the formulas for computing the values of the L and the two Cs in a pi-net you may have noticed that the formulas apply solely to resistive input and output terminations. If that output looks into a complex load, one having a reactive component, all bets are off!

This doesn't mean that a pi-net (or, much better, a Pi-L net) can't cope with a moderately-reactive load. It can, otherwise there'd be very few present-day transmitters capable of being used! It does mean, however, that the transmitter's combination tuning device and impedance-matching device (for that is what the pi-net really is) has to negate the reactive component of the load by introducing a conjugate reactance.

How's that done? By deliberately detuning the plate tank circuit from what would be resonance were the load resistive. This causes the tank itself to be reactive, and, if the reactance is opposite and equal to that of the load, the vacuum tube (or other active device) still sees a resistive load. Sounds like a handy way of getting around a problem, doesn't it? But, like many other solutions, it introduces its own set of problems! When the plate tank is detuned, the carefully-selected LC combination is upset. That ratio was selected upon the basis of Q, of maximum circulating current that could be tolerated, and of the maximum voltage that could be handled. Detune one way, and you may melt down a marginal-design tank coil. Detune the other way, and you may have a voltage flashover across a marginal-design capacitor. And don't think those components are not of marginal design! That's why the manufacturer has to weasel-word his guarantee! He leaves it up to you to provide the necessary protection that he's too cheap to build into his transmitter.

You don't want to re-engineer the transmitter; there's not room enough in the case to accommodate adequate components, anyway. You're not too enthusiastic about plunking down from one hundred to several hundred dollars for a "Matchbox" or a similar device. You'd just as soon avoid the complexity of building a "transmatch." But there's a simple way out!

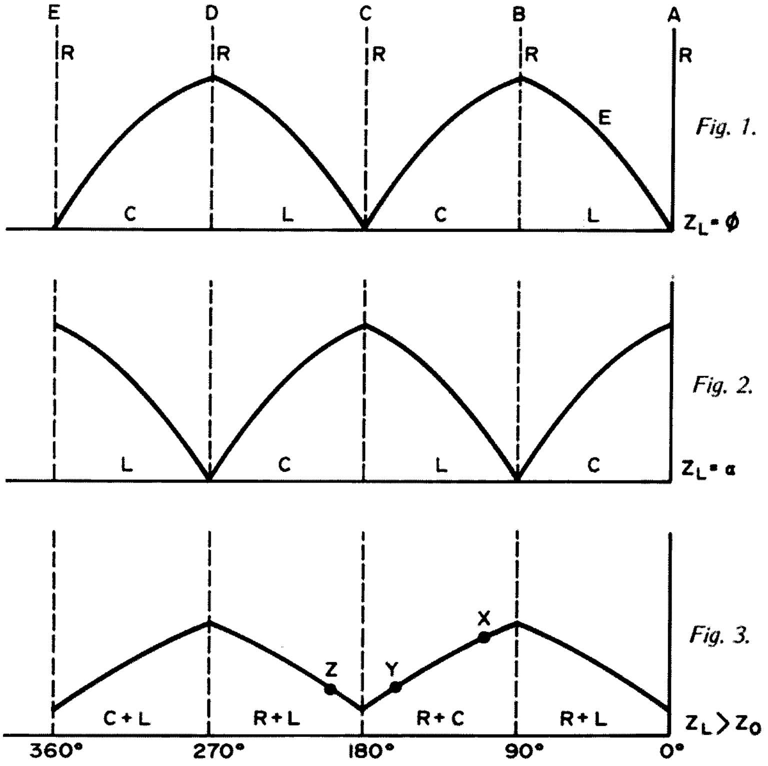

Fig. 1.

Fig. 2.

Fig. 3.

Look again at Fig. 3, and keep in mind that the pattern of those convolutions keeps repeating itself every ½λ, regardless of how long the transmission line may be. Now, suppose your line is of such length that your transmitter is trying to look into it at point X. This high impedance very probably is too much for the transmitter to cope with, but if you were to add just enough line length to patch it out to point Y, the impedance will be lowered to a quite reasonable magnitude! Try it. If your transmitter doesn't like a capacitive load, and some don't, just add enough additional line to patch it out to point Z, which is inductive-plus-resistive.

This sounds like a big job, one that requires a slide rule plus a stack of tables and graphs. Don't believe it! Get a few hunks of transmission line of the same impedance as your feedline, a few coax connectors, and experiment. Use low power (turn down the exciter drive), and you'll not endanger your transmitter. You'll be pleasantly astonished at how easy it is to hit (by a purely hit-or-miss technique) upon a presented impedance with which your transmitter is happy. And a happy transmitter is what you're working toward.

Now for a word about what you're *not* doing. You're not "trimming the transmission line to decrease the VSWR." That is a pure myth. The VSWR is determined solely by the relationship of the line's

characteristic impedance and the load at the far (antenna) end. No amount of fiddling at the receiving end or messing with line length will affect the VSWR. Changing line length will, however, change the impedance the line (if it's mismatched) presents to the transmitter. And that's what you'll be doing.

In my case, I'm using a 3800kHz antenna on 4590kHz. Adding about 3.66m (12') to the only-the-Good-Lord-may-know-what length of my transmission line transformed the impedance to a value easily coped with by an ordinary pi-net output circuit. High VSWR? Undoubtedly! High signal loss? I doubt it, for my reports from distant stations compare with those received when using a resonant antenna.

So go ahead and use a "transmission line[2] matching" device. It's simple, it costs very little, and it does the job well. ■

References

1. J.R. Meagher & H.J. Markley, "Practical Analysis of UHF Transmission Lines," RCA Service Co., Inc., 1943.
2. "ILS/VOR VHF Transmission Lines," U.S. Department of Commerce, Civil Aeronautics Administration, undated.
3. Headquarters Staff, ARRL, Inc., "The Radio Amateur's Handbook," ARRL, Inc., 1973.
4. "The Radio Communication Handbook," Radio Society of Great Britain, 1968.

ASCII to Baudot Converter

by
Cole Ellsworth W6OXP
10461 Dewey Drive
Garden Grove CA 92640

After acquiring a surplus ASCII encoded keyboard[1] it was desired to use this keyboard on the amateur RTTY frequencies. Under present FCC regulations, only 5-level code is permitted (commonly called Baudot code, but actually a version of the Murray code). Therefore, we needed a conversion device that would change the 8-level ASCII code to 5-level code. There are several different approaches to this problem presently in commercial use. One of the earlier conversion methods utilized tape reperforators and tape readers to accomplish the conversion. The more modern video display communications terminals in some instances use computer memory and software to make the conversion. Some integrated circuit manufacturers have made available commercial versions of custom programmed ROMs which greatly facilitate a bi-directional conversion but seem to be somewhat different in format from my requirements, including low cost.

The ASCII code is capable of generating 128 characters (2^7), of which up to 96 may be printing characters. (The remaining 32 are termed "Control" characters.) The Baudot code is capable of generating only 32 characters (2^5) so a "Case Shift" method is used to provide a second set of 32 characters while maintaining a 5-bit code. Thus the need for FIGS shift and LTRS shift on 5-level machines is apparent. It is the requirement for generation of the case shift character that makes the problem of conversion from ASCII to Baudot so interesting. Conversion in the opposite direction, i.e., from Baudot to ASCII, is relatively simple. Witness the recent publication of a circuit[2] that requires only four ICs to perform the conversion.

I had been mulling around several possible approaches to the conversion problem when two significant situations arose which served to solidify the design approach. The first was during the course of a discussion of the matter with Jerry WB6WPX, when he suggested "jamming" the case shift character into the Baudot output bit stream just ahead of the character requiring the case shift. The second was the development of the UT-4 by Irv W6FFC[3]. The FIFO in the UT-4 makes the perfect buffer for absorption of the case shift character (which is generated within the period of a few microseconds) without

Fig. 1.

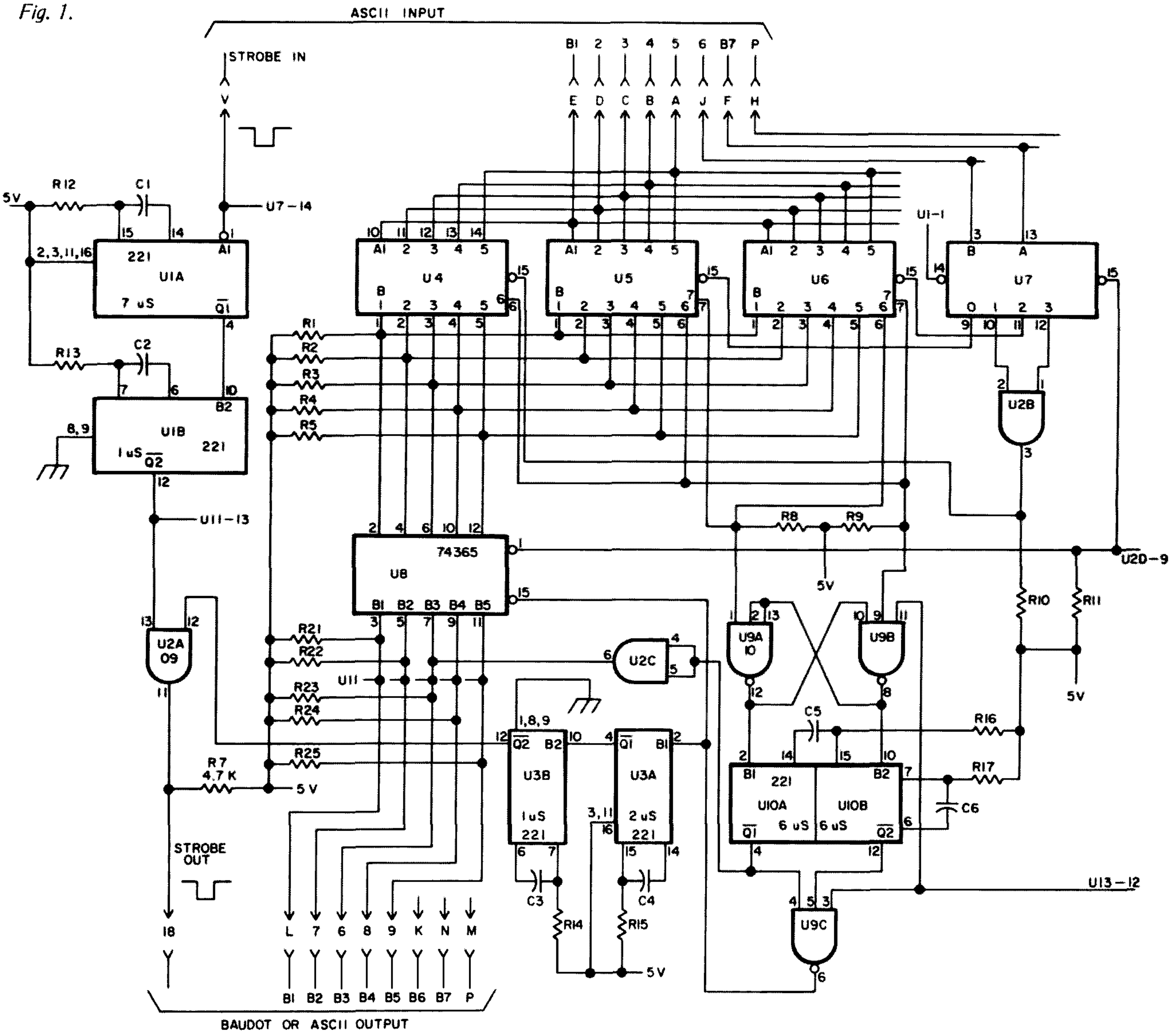

significant delay in conversion of the following ASCII character.

An initial cut at the design resulted in a 12-chip circuit with a timing budget that appeared feasible. A second cut at the design resulted in an operational prototype requiring ten chips including the three conversion PROMs. At the suggestions of W6FFC, a circuit was developed to provide automatic generation of a Baudot LETTERS shift character following a LINE FEED. This feature eases generation of proper end-of-line routine when using an ASCII keyboard and is well worth the three additional chips required. The final design uses 15 chips and was dubbed the ASCII to Baudot Converter – version 1 (ABC-1).

The logic diagram of the ABC-1 is illustrated in Fig. 1. Fig. 2 is the converter timing diagram. Interface with the UT-4 is shown in Fig. 3. Note that one additional 7400 chip (IC13) and one switch (S9) must be added to the UT-4 circuitry to provide ABC-1 interface while maintaining full capability of the UT-4 in the originally intended application.

Features

1. Converts all ASCII characters that have Baudot equivalents to the proper Baudot character.

2. Converts all non-equivalent characters to a Baudot BLANK unless otherwise programmed in the appropriate PROM.

3. Converts both upper and lower case ASCII alphabet characters to the equivalent Baudot character.

4. Provides automatic Unshift-on-Space for Baudot machines.

Fig. 1(a).

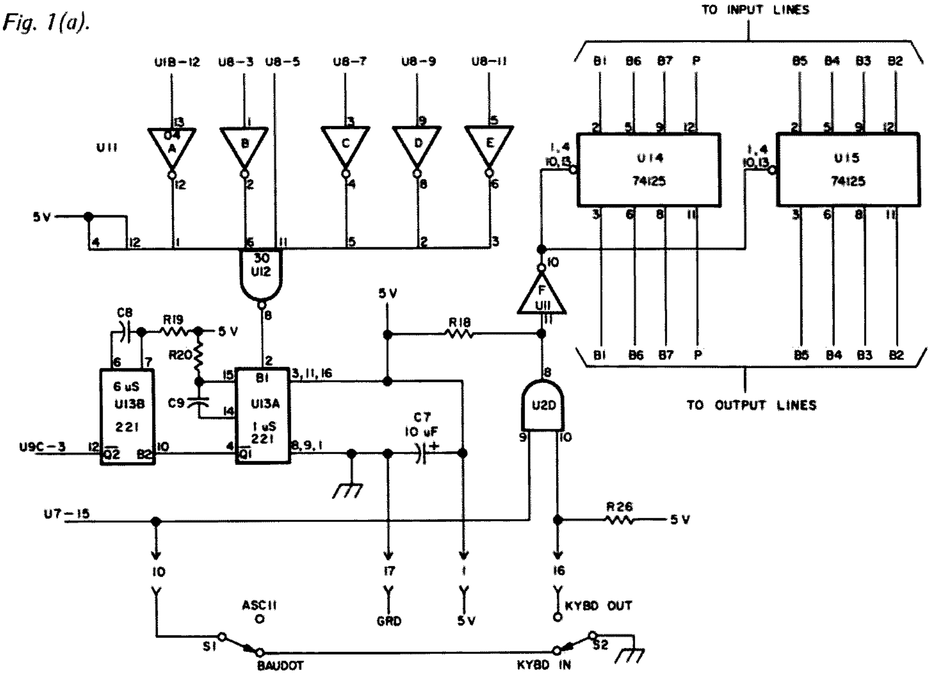

Figs. 1 and 1(a). U1, 3, 10, 13: 74221. U2: 7409. U4, 5, 6: 8223. U7: 74155. U8: 74365. U9: 7410. U11: 7404. U12: 7430. U14, 15: 74125. R1-5, 7-11, 18, 26: 4.7k. R12: 30k. R13-17, 19, 20: 15k. R21-25: 10k. C1: 330 pF. C2, 3, 9: 100 pF. C4: 210 pF. C5, 6, 8: 560 pF. C7: 10 uF, 10 V. Notes: ASCII inputs B1 through B7 are positive logic (Mark = High level). U4 is alphabet PROM that converts both UC and LC ASCII to Baudot. U5 is control function PROM for Carriage Return, Line Feed, and Bell. U6 PROM converts numerals, punctuation, and space bar. Most ASCII characters with no Baudot equivalent convert to a Baudot BLANK character. U11, 12 and 13 generate a Baudot LTRS shift function immediately following a Baudot LF, thus providing a standard end-of-line routine capability of CR, LF, LTRS. Baudot outputs B1 through B5 are positive logic (Mark = High level). U14 and 15 provide direct ASCII throughput when S1 is in ASCII position. For U1, 3-8, 10 and 13, Vcc is on pin 16 and Gnd is on pin 8. For U2, 9, 12, 14 and 15, Vcc is on pin 14 and Gnd is on pin 7.

5. Provides Automatic Letters Shift after LINE FEED.

6. Provides a Baudot Letters Shift on receipt of ASCII "RUBOUT" or "UNDERSCORE".

7. Provides a Baudot Figures Shift on receipt of ASCII "UP ARROW" or "~".

8. Provides for direct throughput of ASCII code.

9. Provides 3-state buffered data outputs for data bus applications.

10. Easy interface to the UT-4.

Functional Description

Parallel format ASCII data is applied to inputs (address lines) of 8223/74188 PROMs U4, U5 and U6. Note that only bits 1 through 5 are used for addressing the PROMs. Bits 6 and 7 are applied to 2-line to 4-line decoder U7. The binary state of bits 6 and 7 are decoded by U7 to provide an enable signal to pin 15 of the appropriate PROM. Decoding of ASCII bits 6 and 7 is arranged by means of U2B so that both upper and lower case ASCII alphabet will be converted to the equivalent Baudot character.

PROM output data (in Baudot code) bits 1 through 5 from all three chips are "wire-or'd" and applied to 3-state buffer U8. If U8 pins 1 and 15 are both low, data from the selected PROM passes through U8 and appears at the output of the converter.

Simultaneously with the appearance of ASCII data at the inputs of the PROMs, the keyboard strobe signal is applied to U1A. U1A and B provide a total strobe delay of approximately 7 microseconds. At the end of this delay period, the strobe signal appears at the output of U2A. When the ABC-1 is connected to a FIFO such as in the UT-4, the delayed keyboard strobe signal causes a "shift in" signal to be applied to FIFO pin 17. Because the data at the output of ABC-1 chip U8 is already present at the FIFO data inputs, this data is entered into the FIFO as a parallel format Baudot character.

The preceding paragraphs describe what happens in the converter when no case shift is required. Let us say that the character converted in the previous example was the character "R". Let us now assume that the next ASCII character from the keyboard is a period. Conversion of this character to Baudot code requires that it be preceded by a FIGS shift character. The states of bits 6 and 7 in the ASCII period character cause PROM U6 to be selected for punctuation characters (numeral conversion also takes place in this PROM). PROM U6 *output* bits 6 and 7 are Low and High respectively for a period character and are applied to the case shift detector latch U9A,B where pin 12 of U9A was Low for the previous character R. Bit 7 is High and so has no effect on the latch. Bit 6 is Low, causing U9A,B to change state, and pin 12 goes High. This Low to High transition is applied to input B1 of 1-shot U10A, generating a 6-microsecond wide FIGS shift gate at U10A pin 4. This gate performs three functions. It inhibits U8, causing U8 outputs to revert to the 3rd (high impedance) state, and because of the current sources through R21-R25, U8 output bits B1, 2, 4, 5 go High. Bit 3 goes Low because of the inverted (Low) output of U2C which is the second function of the FIGS shift gate. The 3rd function of this gate is to generate a "Case Shift Strobe" pulse by means of U3A,B and U2A. This strobe is delayed 2 microseconds by U3A, permitting the parallel data at U8 output (bits 1, 2, 4, 5 High and bit 3 Low = Baudot FIGS shift) to settle to a static condition before being entered into the FIFO by the strobe signal.

So far, approximately six microseconds have elapsed since the ASCII data and strobe for the ASCII character "period" appeared at the input to the converter. At the end of the 6 microseconds, U8 is enabled, and U2C output returns to a high level. At this time the Baudot character for period (B1, 2 = Low, B3, 4, 5 = High) is present at the output of U8. One microsecond later the delayed (7 microsecond) keyboard strobe from U1B appears at U2A pin 11 and now the Baudot period character is entered into the FIFO. Generation of a LETTERS shift character in U10B is similar to the foregoing except that U2C output remains High (U8 outputs B1 through B5 are all High).

Thus it is apparent that all normally converted characters are delayed by seven microseconds within the converter before being strobed into the FIFO. If a case shift character is required, it is generated and strobed into the FIFO during the seven microsecond delay interval.

U11, 12, 13 and U2D form the "Letters shift after Line Feed" circuit. U11 and U12 detect the presence of a Baudot Line Feed character at the output of U8. The output of U12 goes Low when the normal delayed strobe pulse from U1B appears at U11A. After a one microsecond delay through U13A, U13B generates a six microsecond pulse that is applied through U2D and U9C to start the generation of a Letters shift character as previously described. A non-printing character such as Letters shift, following a line feed, gives the machine time to return to the left margin before printing the next character.

In Fig. 2, waveform 11 of the timing diagram is a composite of the various conditions at the converter output strobe line. The "Typed character strobe" (center pulse in the pulse train) will appear on the strobe line every time a character key is pressed on the keyboard. The case shift strobe and LSAL strobe are shown as dotted lines, indicating they will appear only under certain conditions. Depending on previous conditions, all three strobe pulses can appear in the sequence illustrated when the converter receives an ASCII LINE FEED character.

Construction

The timing components should be kept clear of the trigger inputs on the one-shot multivibrators. Five percent tolerance dipped mica capacitors and five percent ¼ Watt resistors should be used in the one-shot timing circuits. Three ABC-1 converters have

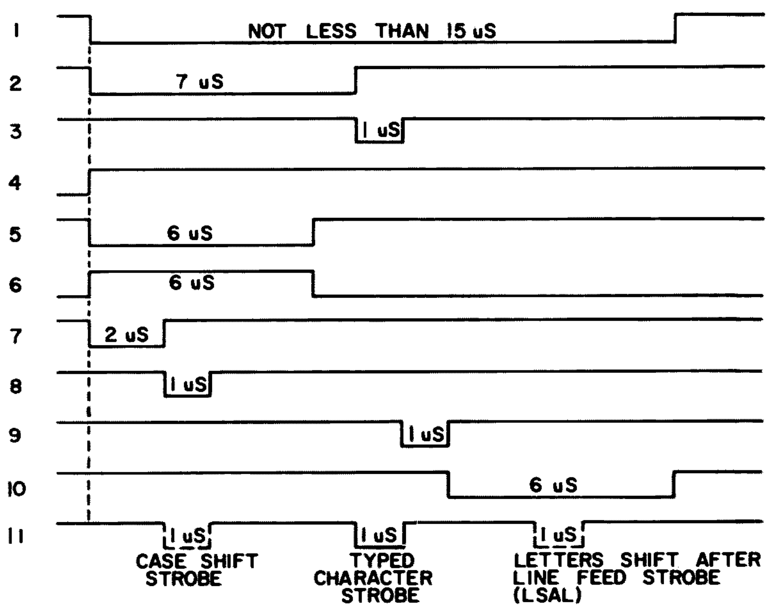

Fig. 2. Timing diagram. 1 — Strobe in, U1A-1. 2 — Strobe delay, U1B-10. 3 — Delayed strobe, U2A-13. 4 — Figs shift, 1-shot U10A-2. 5 — Figs shift gate, U10A-4. 6 — Case shift gate, U10A-4. 7 — Case shift strobe delay, U3A-4. 8 — Case shift strobe, U2A-12. 9 — LSAL gate delay, U13A-4. 10 — LSAL gate, U9C-3. 11 — Strobe output, U2A-11.

been constructed and the timing was well within tolerance using off-the-shelf five percent components.

Use of a printed circuit board makes construction much easier and decreases chances of wiring errors. Even so, the PC board has a high component density and traces are very close together. Great care should be exercised during assembly and soldering to prevent errors in component location, IC orientation, and solder bridges. Sockets or molex pins are recommended for the ICs.

PC Boards and PROMs

EDI[4] has been authorized to make a PC board available for the ABC-1. This is a glass epoxy, double-sided, plated-through hole circuit board. It will fit a standard .156 spring 18-position double-readout edge connector. Boards only, or complete parts kits including the three pre-programmed PROMs, are available.

If you already have a UT-4, Fig. 3 shows the changes required to interface with the ABC-1. If desired, EDI has a modified UT-4 PC board with these changes incorporated. Order "UT-4 IF" PCB/kit. This PCB fits the same type edge connector socket as the ABC-1.

Troubleshooting

Most comments on troubleshooting in the KBI-1 article apply to the ABC-1. The converter is a fairly complex circuit with critical timing parameters. If a scope is not available, it is mandatory that the associated UT-4 be operational in order to check converter operation.

Strobe and data lines from the KBI-1 outputs to the ABC-1 inputs and from the ABC-1 outputs to the UT-4 should be less than 20 inches in length. Transmission line techniques must be used for longer lines as described in the KBI-1 article.

Logic levels at the seven data inputs to the ABC-1 must be stable at the time the keyboard strobe goes Low at U1A-1 and U7-14. As indicated in the timing diagram, the minimum width of the strobe pulse is 15 microseconds. If your keyboard strobe is pulsed with a period, for example, of 5 microseconds, then U14 of the KBI-1 must be used to stretch this 5 microsecond pulse to at least 15 microseconds. Another possible source of improper operation is errors or omissions in the switching and control circuitry (S1, S9) as shown in Fig. 3.

To use the Repeat message function in the UT-4 during operation with the KBI-1/ABC-1, PRELOAD switch S5 is set to PRELOAD, KYBD switch S9 to IN and the message is typed into the UT-4 memory from the keyboard. KYBD switch S9 is then set to OUT and REPEAT switch S8 is set to REPEAT. Then PRELOAD switch S5 is set

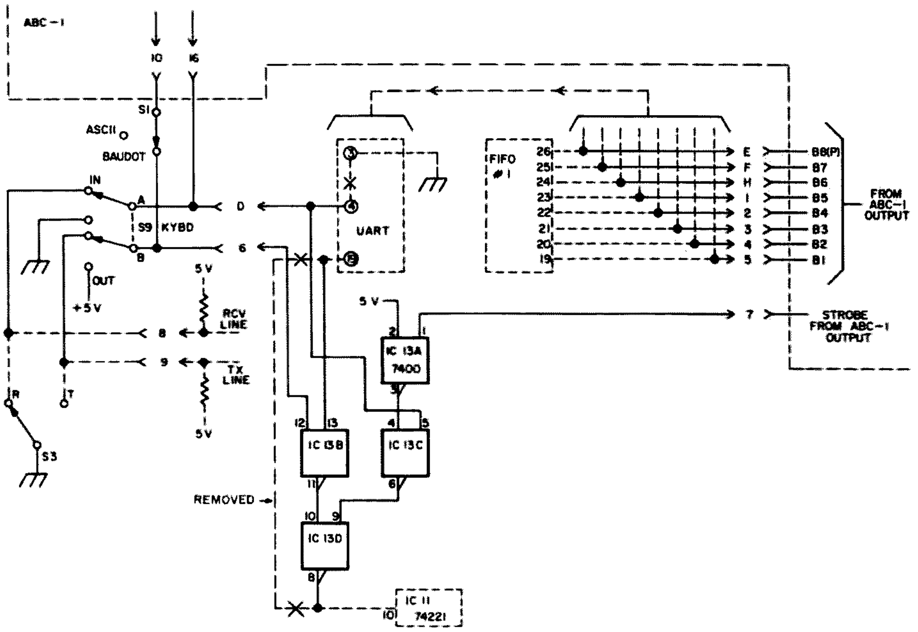

Fig. 3. Changes required to interface UT-4 to ABC-1. Notes: Dotted lines show existing circuits in UT-4. Solid lines indicate added circuitry to accommodate ABC-1. These additions change the UT-4 PCB to UT-4 IF PCB (IF = Interface). ASCII/Baudot switch S1 is the same as S1 in ABC-1 schematic. Keyboard In/Out switch S9 is added to UT-4 control switching. UT-4 IF has all the features of UT-4 except that Space switch S7 is deleted. UT-4 IF edge connector references are for the EDI printed circuit board.

to NORMAL and the message is continuously recirculated through the UT-4. REPEAT switch S8 also permits local copy on your printer during the repeat sequence when using the UT-4 IF circuit board. KYBD switch S9 must be returned to IN if you wish to continue using the keyboard after completing the repeated sequence.

Acknowledgements

In addition to the valuable suggestions contributed by W6FFC and WB6WPX, thanks is due Peter K6SRG, for his many helpful comments and for checking out the first prototype PCB. I am indebted to Steve WA6TVA, for pointing out the need to force the case shift latch to the letters state when auto letters after line feed is generated. Appreciation is also extended to many others who offered suggestions and encouragement, including K2SMN, K3TML, WA5NYY, W6GQC and WA7ARI. ■

References

[1] Ellsworth, C. A., "Using A Bargain Surplus Keyboard" (The KBI-1), *73*, January, 1976.
[2] Lancaster, Donald M., *The TTL Cookbook*, 1974, p. 153.
[3] Hoff, Irvin M., "The Mainline UT-4," *RTTY Journal*, March, 1975, p. 4.
[4] Electronic Development, Inc., PO Box 951, Salem OR 97308.

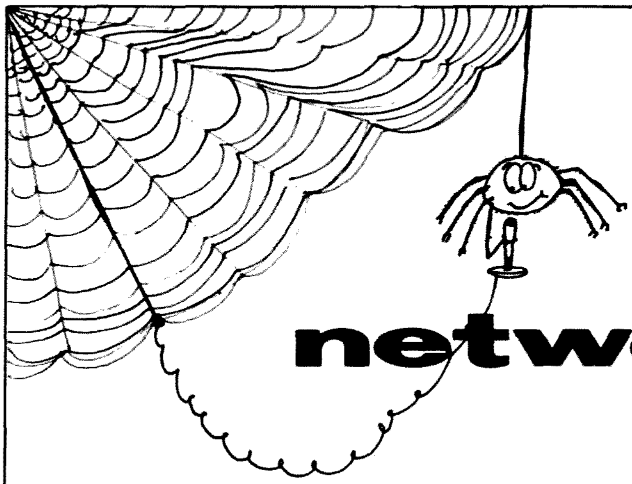

networks

E.H. Barnett WB0IIX
Route 1
Ashland, Missouri 65010

NOTE: Times and Days are given in GMT.

NET TYPE

I – Information
R – Rag Chew
S – Service
T – Traffic

Service Area	*Net Type*	*Name*	*Time*	*Days*	*Freq*
INTERNATIONAL					
	S	Intercontinental Net	1100	Daily	14315
	S	Maritime Mobile Service Net	2000	Daily	14315
	S	Intercontinental Net	2200	Daily	14315
NATIONAL AND REGIONAL					
Midwest	I	Midstate Weather Net	0000	Daily	3940
US	I	Liberty Net	0300	Thurs	3860
North Central	T	North Central Phone Net	1300	Daily	3915
North Central	T	North Central Phone Net	1800	Daily	3915
US	I	Liberty Net	1800	Sat	14320
Great Lakes	R	Great Lakes After School Net	2100	M-F	3988
STATEWIDE					
MT	T	Idaho – Montana Net	0030	Tu-Sat	3582
IA	T	Iowa 75 Meter Net	1730	M-Sat	3970
MI	T	Michigan Buzzards Roost	2130	M-Sat	3930
NH	S	New Hampshire Emerg. Net	2200	Sat	3945
MO	T	Missouri Emerg. Net	2300	MWF	3963
IA	T	Iowa 75 Meter Net	2300	M-Sat	3970

Nets Worth Checking Into:

Great Lakes After School Net. If you are tired of just cookies and milk or having a soda with Mary Lou after school, try rag chewing on this net. For high schoolers, by high schoolers.

Liberty Net. This is an information and rag chew net for people who care about this country's future.

My thanks to WB8THQ and WB9PHM for contributing this month. Would someone please tell me about the Southern Texas Country Cousins? I listened to it one day and I can't remember what frequency it is on. I would like to include it in this column. If you check into any net please drop me a line.

I/O

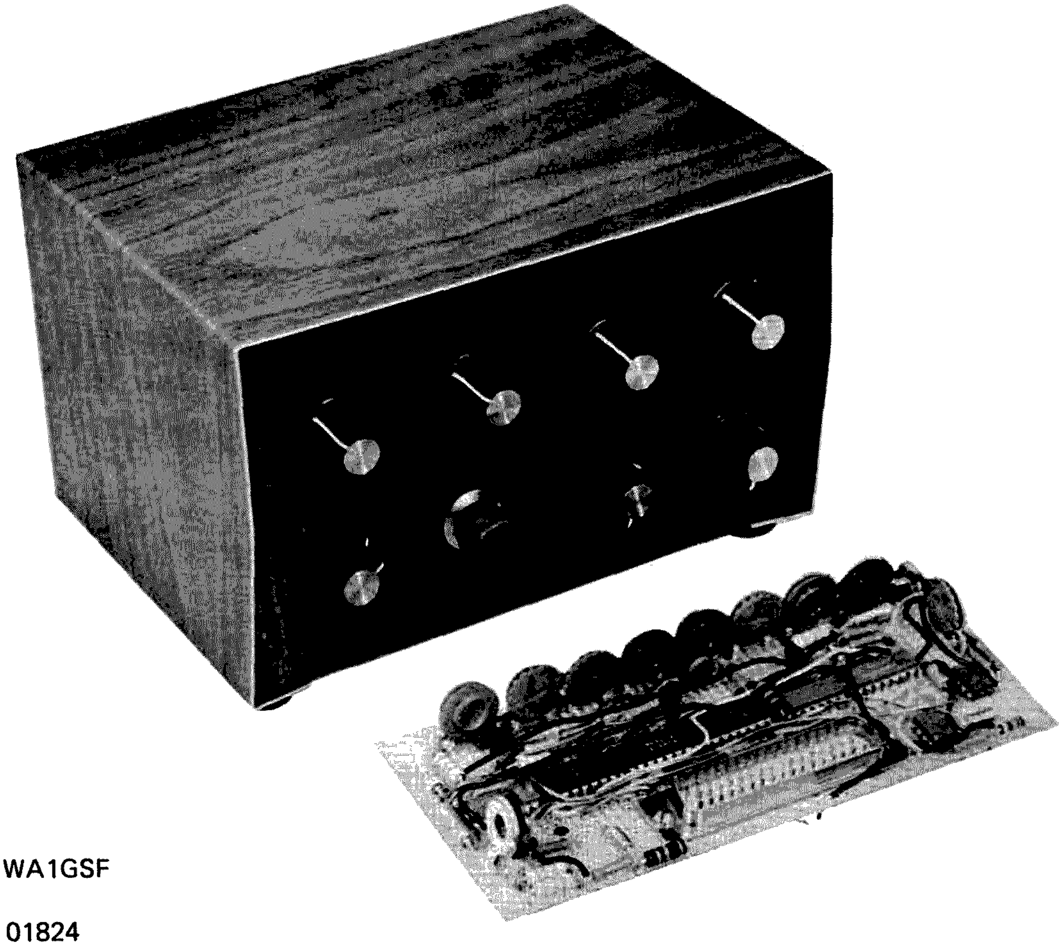

by
David A. Wallace WA1GSF
146 Westford St.
Chelmsford MA 01824

No, I'm not going mathematical on you. (At least I don't think so . . .) Instead, I'm going to describe how to construct a device which is guaranteed to warm the heart of any red-blooded gadgeteer – a random music generator. This is a full-fledged construction article, so if you're not interested in warming up your soldering iron (You say you don't even own one? What are you doing in my audience?), you might as well skip this article and go read someone else's. But if you like to sling circuits together, then this little number is definitely for you.

Description

The random music generator (henceforth called the RMG) consists of three basic components: the sequencer, the oscillator, and the waveshaper.[1] As you can see from the basic block diagram in Fig. 1, the sequencer provides control signals to the oscillator and the waveshaper, thus determining the note played and the timbre for it.

The sequencer is a special form of shift register circuit known as a Johnson Counter. It is used to produce (almost) random bit patterns. In the RMG, the sequencer is a 12-bit shift register with an exclusive NOR gate acting as a feedback path. Depending on the exact connection of the feedback gate's programmable input, the sequencer can produce patterns of from 18 to 3255 12-bit words. The sequencer is controlled by a clock circuit, a pulse generator which operates in the range of from 1 to 10 Hertz, approximately.

The oscillator circuit is a voltage controlled square wave generator which will play one of eight musical notes (C, D, E, F, G, A, B, C), depending on the state of the seven note selector lines. The oscillator is

The Sound of Random Numbers

divided down in frequency, by a three stage ripple counter, to provide four octaves of range. Eight potentiometers (R1 through R8) are used to tune each note to pitch.

The waveshaping circuits control the timbre (tonal quality) of the note played, and also the stereo effect. Four "voicings" are available. There was no attempt made to tailor these voicings to sound like traditional musical instruments, so the RMG has a definite "spaced-out" sound to it.

Construction

The electronics for the RMG (Fig. 2) is constructed in three subassemblies: the front panel subassembly (which contains the selection switching and the controls), the power supply subassembly (which can be constructed in the chassis itself), and a 2.5" x 6" piece of tenth-inch-grid perfboard which contains all other circuitry. Wiring is point-to-point, as impedances in the RMG are low and therefore stray coupling is not a factor.

My prototype used a hole matrix switch consisting of 144 holes in a 6 inch square of

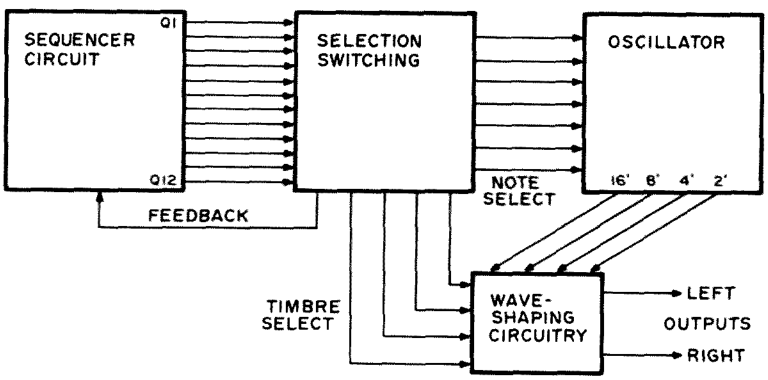

Fig. 1. Block diagram.

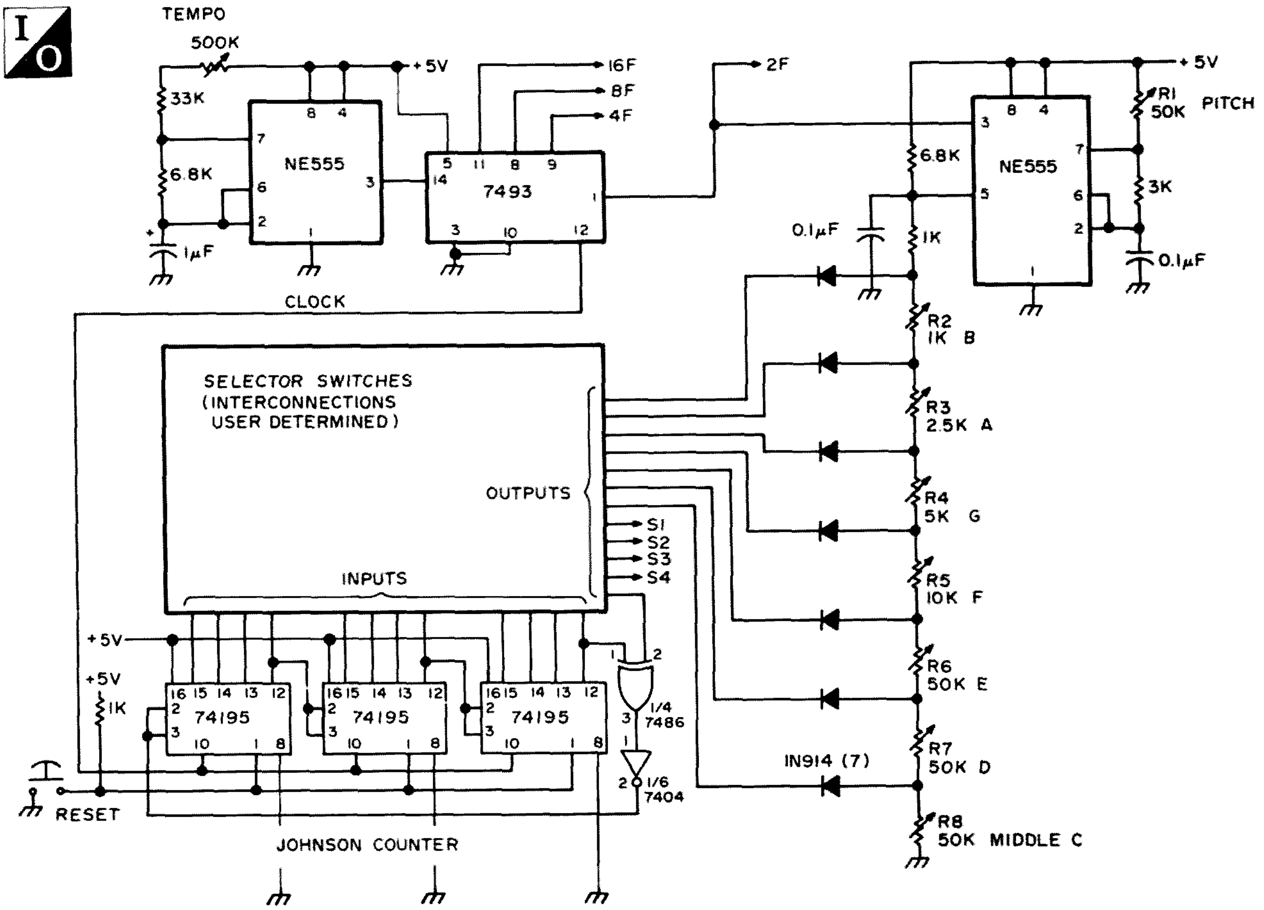

Fig. 2. Schematic.

phenolic. Each hole has two contacts in it, which are shorted together when a conductive programming pin is inserted. The main advantage of this scheme is that the pattern of pins in the phenolic gives a quick visual readout of the program set up. The main disadvantages are, first, that one must be careful not to insert two or more pins in the same horizontal line in the matrix switch (as this will short two or more shift register

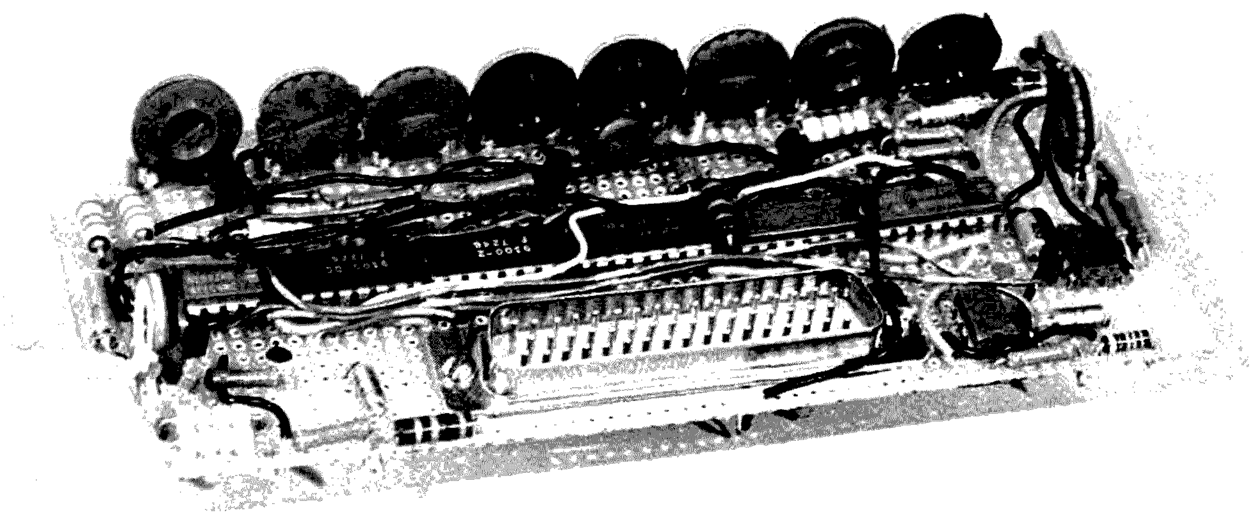

Closeup of the circuit board. The trimming potentiometers provide adjustment for the pitch of each note and the output level for each channel.

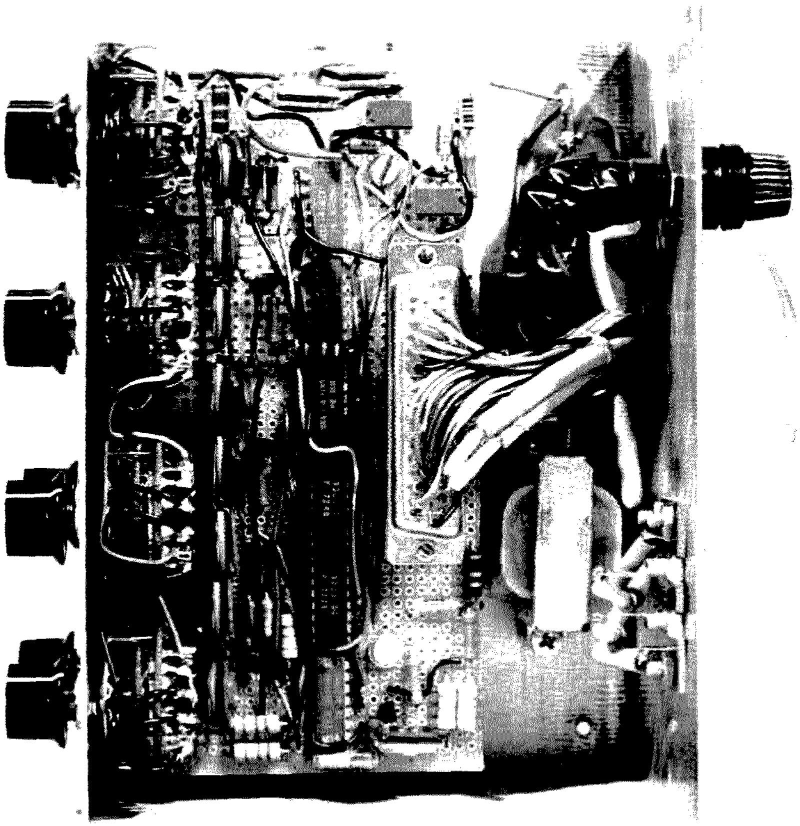

Inside the RMG: The circuit board is mounted on stand-offs and connects to the power supply and front panel wiring via the cable at the rear.

outputs together, and second, that the assembly of such a matrix switch requires that connections to 288 contacts be made in a very small area. One can achieve the same versatility by using twelve single-pole twelve-position rotary switches (at $2.00 each!) with only 156 connections to be made, or by using two twelve terminal barrier strips and some jumper wires. The terminal strips can be mounted on the front panel, or (more esthetically) on the rear of the RMG. A reasonable compromise between versatility and cost can be realized by "hard-wiring" some choices in the selection matrix and using rotary switches to select others, as was done in the version photographed. The mechanical layout of the front panel is, of course, determined by which selection scheme you choose.

The power supply subassembly can be constructed on a terminal strip, with the exception of the LM-309K, which should be mounted on the chassis itself for heat sinking purposes. This is simplified by the fact that the "309" is so constructed as to make the device's case a ground terminal – thus no insulation is required when mounting it to the chassis. A half amp fuse is recommended for safety.

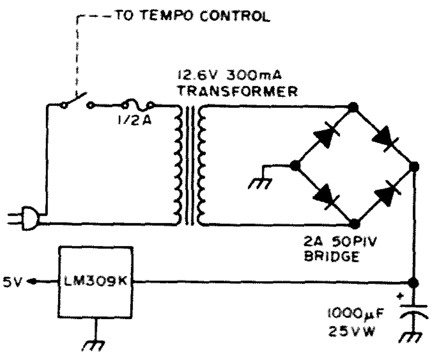

Fig. 3. Power supply. Unless otherwise noted, resistors are ¼ Watt and capacitors are 10 WV.

Table 1.

Note	Scientific Scale (C-256)	Concert Scale (A-440)
Middle C	256.00	261.63
D	287.35	293.66
E	322.54	329.63
F	341.72	349.23
G	383.57	392.00
A	430.54	440.00
B	483.26	493.88
C Above Middle C	512.00	523.25

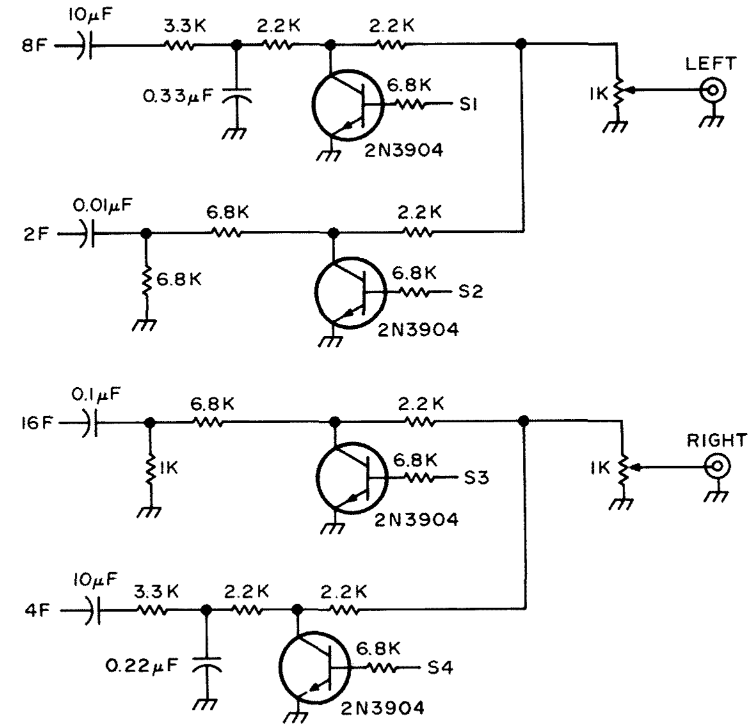

Fig. 4. Switched filters. All transistors = 2N3904.

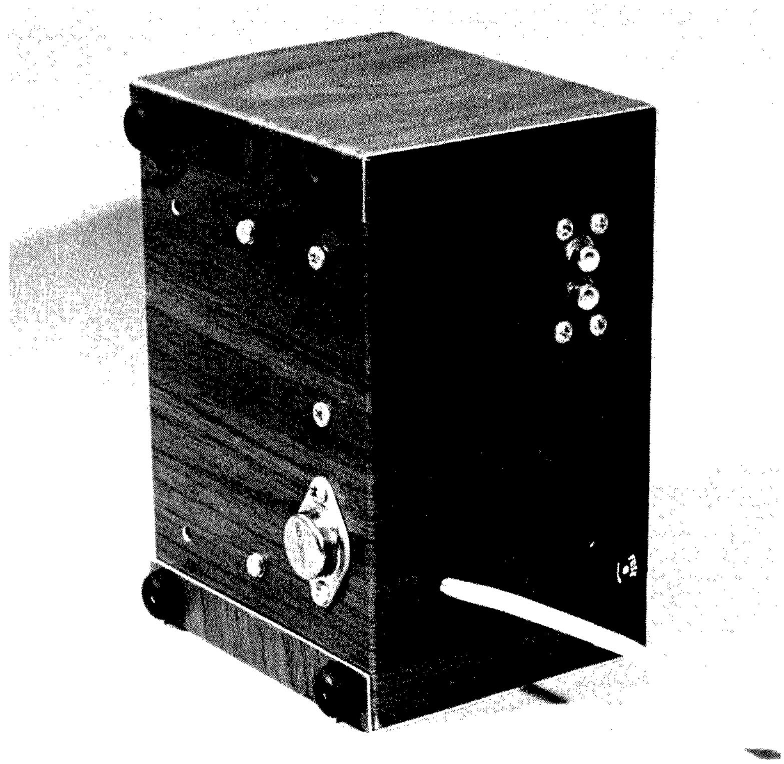

Back panel and bottom of the RMG. Note the LM-309K mounted on the underside. The phono jacks on the back are the outputs.

Table 2.

Feedback Point	Number of States
Q1	3255
Q2	126
Q3	45
Q4	28
Q5	819
Q6	18
Q7	819
Q8	28
Q9	45
Q10	126
Q11	3255
Q12	not possible

The audio outputs are terminated in jacks which match the cables of the hi-fi you intend to use with the RMG. My prototype used RCA phono jacks. The outputs are low impedance (approximately 1000 Ohms) high level (about 1 volt peak-to-peak), so use compatible hi-fi inputs for best results.

Tuning

Tuning the RMG should be done with care, as the "listenability" of the instrument suffers if it continuously plays sour notes. A pitch pipe or a musical instrument known to be in tune may be used as a reference. Unless you have a frequency counter which reads to .01 Hz (a rare bird indeed!), you must use a zero-beat tuning method. A counter which reads to 1 Hz is not accurate enough for tuning. To tune the instrument, hold the reset button in and program one note at a time to any shift register output. Start with the highest note (C above middle C) and descend the musical scale, adjusting R1 through R8 for zero beat with the reference instrument.

Table 1 gives the frequencies of the eight musical notes. You may tune to scientific or concert pitch, as you please.

Programming

Programming the RMG is mostly a matter of taste. However, a couple of points can be made. First, very short sequences tend to become monotonous very quickly, but very long sequences can become so involved with permutations as to be hard to follow. Second, if you wish to listen to a sequence, pick a long one; if you play an instrument and wish to improvise around a sequence that the RMG plays, pick a short one.

Table 2 indicates the number of 12-bit "words" produced by the RMG for each sequence it is possible to program.[2] ■

References

[1] Lancaster, Don, "Build an Electronic Music Composer/Synthesizer," *Popular Electronics*, February, 1971.

[2] PL/1 Program jc.pl1, written by D. A. Wallace on Multics 2.1.

What Do You Want To Count?

by
Jim Huffman WA7SCB
PO Box 357
Provo UT 84601

This is a digital world we live in today. Digital readouts are flashing on everything from FM tuners and wristwatches to "meter-less" VU meters. Ham equipment is going digital, too. Readouts are more accurate, readings are easier to interpret, and

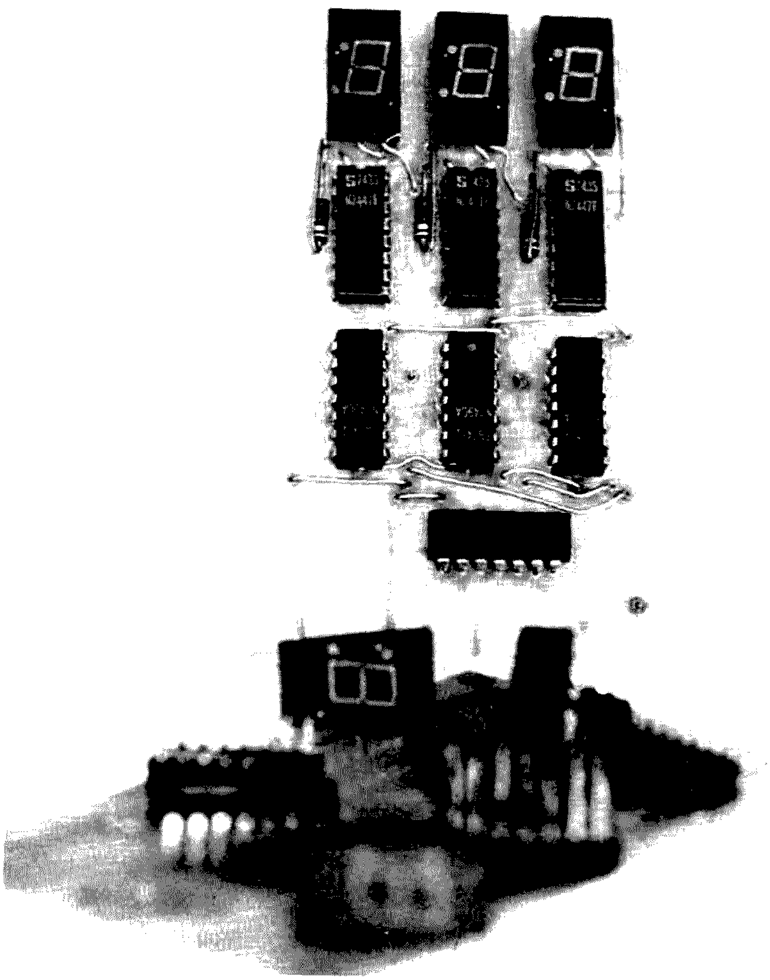

All the 3 DCU parts mount on one circuit board.

bent pointers, non-linear dials, and other mechanical problems are eliminated. New, nearly burnout-proof LED readouts with no parallax and ±1 digit accuracy are becoming available at a price that is allowing more and more workbenches to be fitted up with flashing lights where once stood taught-band, multi-scale meters. Since all this digital equipment is obviously here to stay, this article gives you the basics, so you can understand how that new DVM or digital wristwatch works. And, if you already have the savvy on the digital scene, you'll be interested in the 3 DCU. It's three digits of Decimal Counting Unit. It makes a great counter display, DVM display, etc. And you get three digits for what you would expect to pay for only two digits – less than $18.00!

Digital devices are simple, and most operate on the same very simple principles. Digits are counts, and there are any number of counting systems. The most familiar system is based on counting with the ten fingers ("digit" is derived from the Latin word for finger). Since there are ten fingers the system is called decimal (deci = 10). You could use base 20 (fingers and toes) or anything between. Of course, if you use decimal numbers to represent the figures in another system you will have to use some additional symbols, because there are only ten numbers. The hexadecimal system (base 16) uses letters and numbers. A hexadecimal count goes 0, 1, 2, 3 and so on to 9. For 10 and higher you substitute ABCs, like this: 7, 8, 9, A, B, C, D, E, F. Therefore, a hexadecimal C is the same as a decimal 12. Because of the vast number of digital systems, there had to be a place to start in electronic digital equipment and that was two. Simply "on" and "off." The binary system is a "base two" counting system (bi for 2). While being able to make only a maximum count of two might seem like a shortcoming, it is no problem for an electronic circuit to switch on and off a million times a second. That's pretty fast counting!

Okay, so we use binary, count some pulses, then show 'em to the operator. The problem is, it's tricky for a mere human to see those digits flash past a million times per second. The logical answer: Store the count. This is where the binary counter comes into action. We feed it a group of microsecond pulses and then take some time to look at how many pulses were there. The binary counter operates on both the principle of frequency division and storage.

The basic circuit that makes up a counter is the flip flop. A flip flop does just that. First it flips, then it flops. With a little pulse steering it "flips" on a negative pulse in, then "flops" on the next negative pulse. A

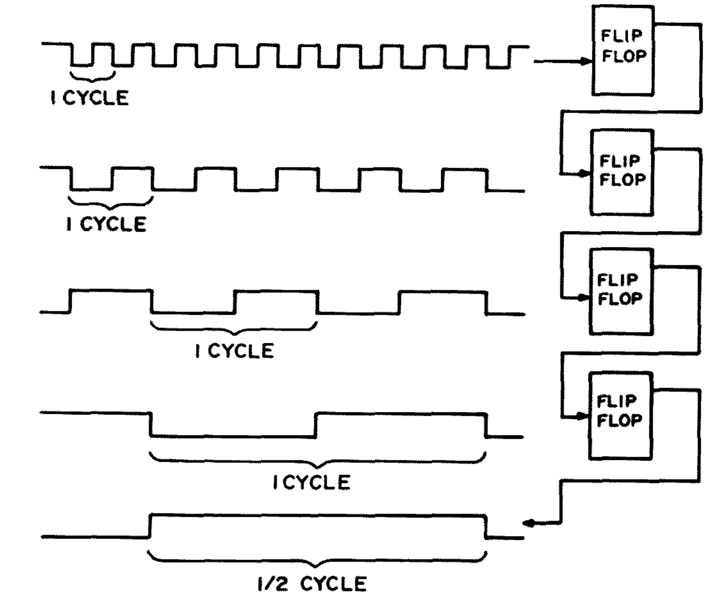

Fig. 1. Flip flops divide frequency.

square wave input has a negative transition every cycle (Fig. 1). It takes two of these negative transitions, or two cycles, to get a flip flop back to the way it started. Thus,

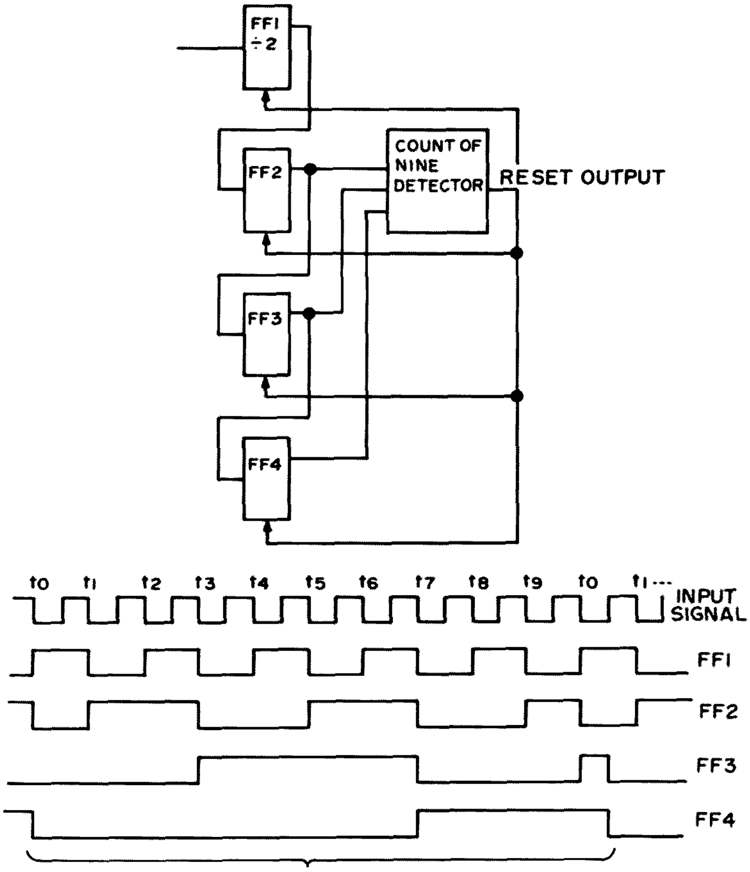

Fig. 2. Counter modified to divide by ten.

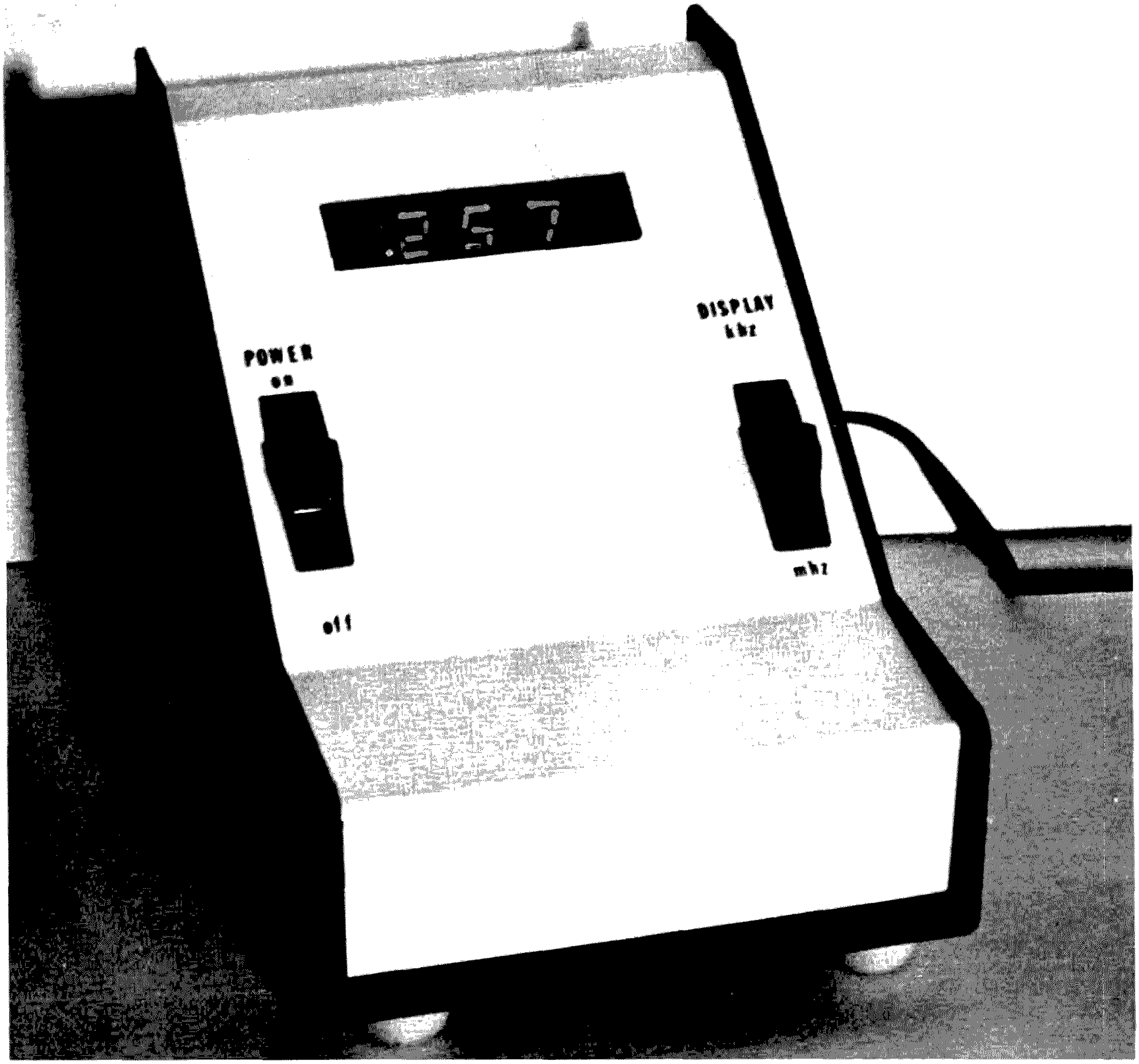

Put a 3 DCU in a cabinet with a timing circuit board, and you have an instant 3-digit counter, great for reading out the frequency of your rig.

the flip flop divides the input frequency by two. If the output of that flip flop is divided by two by another flip flop, we have a simple divide-by-four counter. One more stage yields divide by eight. The number of stages is the same as the power of 2. For instance, the 3-stage counter yields 2^3 or divide by 8. A 2-stage counter (2^2) gives a four count. It is also possible to make the counter short itself by a count to allow counting to any base.

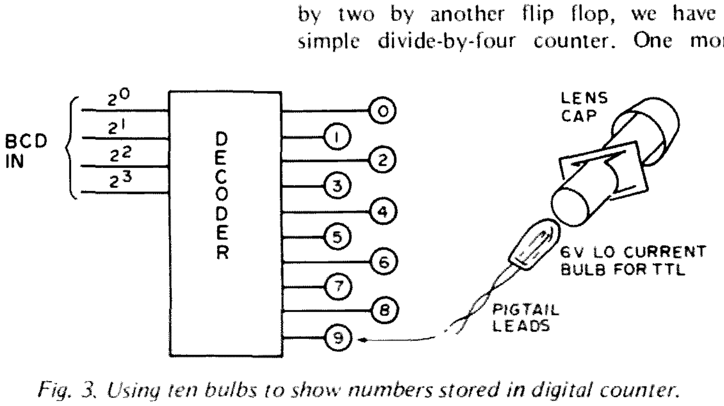

Fig. 3. Using ten bulbs to show numbers stored in digital counter.

Fig. 2 shows one way to modify the count. The four stage counter would normally divide by 16 (2^4 = 16). Notice that at time t_0 the output of the counter is reset by the combination of outputs from the stages. The counter will count from t_0 to t_9, then reset and start all over at t_0. This gives divide by ten action. In fact, this counter is called bi-quinary, since the first stage divides by two, and the last three stages divide by five.

This is the same basic logic used in the popular 7490 divide by ten IC. The output of the counter is not only divided by ten but is BCD. BCD means "Binary Coded Decimal."

That's where the storage capability of the flip flop enters the picture. A lone negative pulse in will flip it (or flop it, if it were already flipped). If no other pulses come along, the flip flops will remain the same and the number of pulses will be stored in a counter. In fact, because of the BCD action, a seven pulse in would give an output from the four stages of 0111 (binary for decimal 7). If the counter is reset and we let in say, thirteen pulses, the stages will flip flop along until they count to ten and then start over again. The three remaining pulses would cause the counter to sit at 0011 (BCD for 3). What happened to the 1 in front of the 3? Simple: It spilled over to the next decade counter if there was one. So, the first counter counts units, and the next one counts tens. With 27 pulses, two decade counters would store 7 (units) and 2 (tens). So putting the first decade on the right and the second on the left would give 2 – 7 or 27. With readouts connected to our counters, we would be able to read our numbers just like the numbers on a written page. Just hook up a light bulb to the stages in each decade for an instant readout.

Of course the readout would be BCD. For 27 that would be 0010 and 0111. That's not too hard to read, if you remember in binary you have only a two digit base – 0 and 1. And think of the action of the decade counter. The counter on the right counts digits and the one on the left, tens. Well, in the BCD system the digit on the right counts units just like in the decade counters. Remember that there are only two counts, not ten, so the next digit to the left counts twos. The next one can count up to two twos (that's four). The last digit is eights. So the BCD 0110 is (from the right) no units, one two, one four, and no eights. Add them up. That's four plus two, or six, so 0110 BCD is 6 decimal. Now it is easy to read the lights and tell what is in the decade counters.

With all the miracles of electronics, it's pretty easy to build something that lights up to ten lights with little 0 through 9's stenciled on. You just look and see a display in decimal as shown in Fig. 3. Decoding the BCD and converting to decimal to light up the digits is accomplished by using a decoder made up of a system of gates.

Just as flip flops store and divide, gates decode and control. There are two basic gate functions and all others are variations of these functions. The two basic functions are AND and OR. The AND gate has to have its inputs applied together to have an output

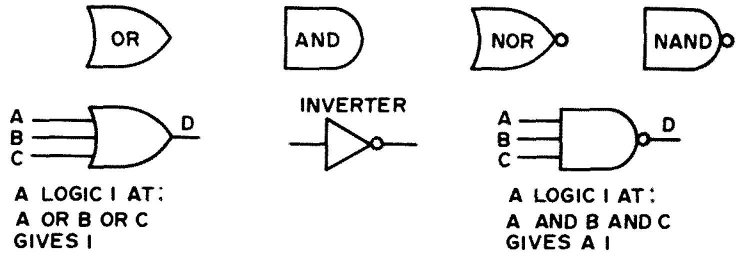

A	B	C	D
I	I	I	I
I	I	O	I
I	O	O	I
O	O	O	O

A	B	C	D
I	I	I	I
I	I	O	O
I	O	O	O
O	O	O	O

Fig. 4. Logic symbols with truth tables for OR and AND.

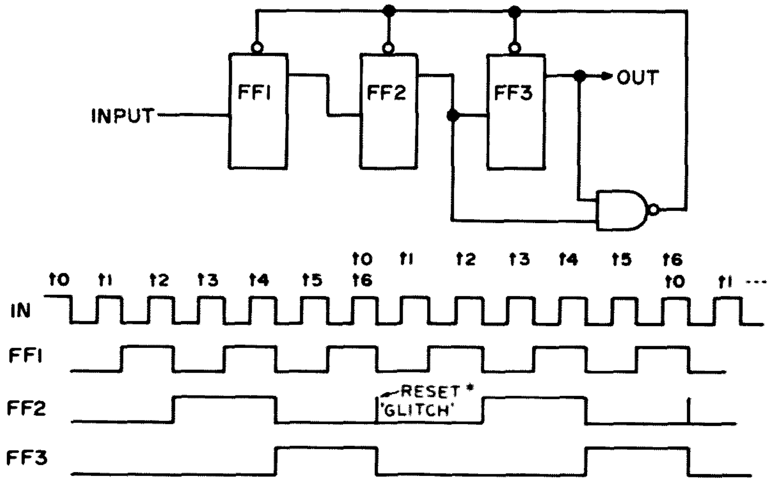

*Fig. 5. Divide by six counter. *Because of the "glitch" at FF2 and fast switching times of some flip flops, you may get FF3 flipping again. You may suppress the glitch or divide by a non-reset flip flop at the end of the counter. One of these, followed by a decade (÷10), gives a one second output from the 60 cycle ac line.*

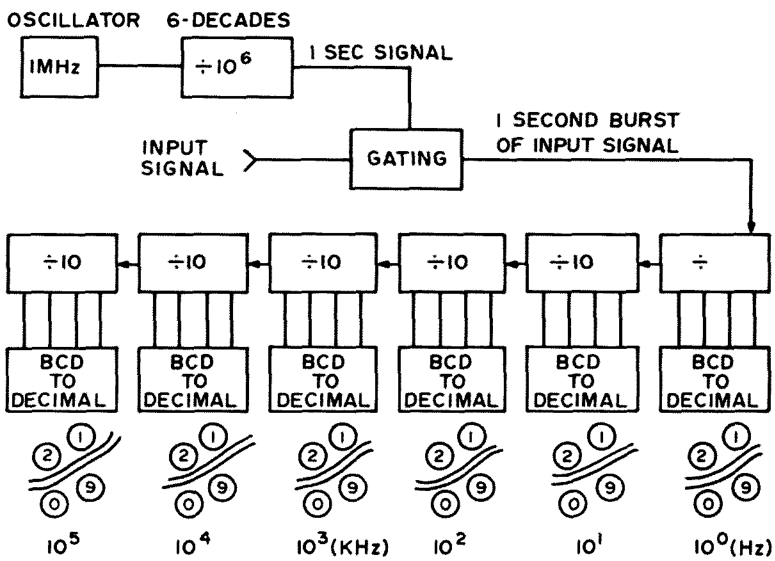

Fig. 6. Basic counter block diagram. Frequency readout in Hertz.

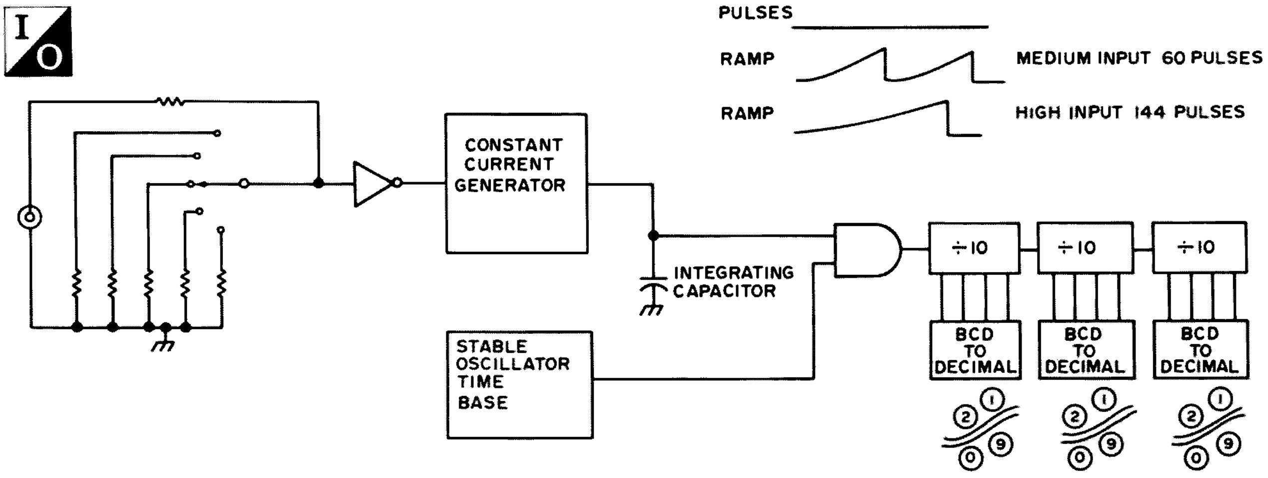

Fig. 7. Basic slope integrating DVM, showing some relationships between the slope wave forms and the timing pulses.

(an "output" and "input" are considered a logic 1, or positive voltage). The OR gate takes one input "or" another "or" any other to get an output. An inverter (common emitter amp) following either of these gates inverts it and you get NOT AND or NAND and NOT OR or NOR. That means a one AND a one give a zero and a one OR a one give a zero. It's upside down logic but it comes in handy. To abbreviate the circuit you use the logic symbols shown in Fig. 4.

Now let's take a three stage (divide by eight counter) and do some fancy counting. To divide by six we need a count of 101 (binary equivalent of five) maximum – then when the count hits 110, six, we want to reset the counter to zero. So, simply use a two input NAND gate (it takes a zero to reset our counter stages). You end up with Fig. 5. That's a good beginning for a clock. Just divide by six, then divide by ten for one second outputs from the 60 Hz ac line. Just hook up the decade displays and you can count the seconds. If you modify the decade displays so the second one from the right counts to six and then resets, and the fourth one from the right does the same, you will count up to 60 seconds and spill over the next two digits to the next counter pair (in which the far left digit only counts to 2). At 11 hours 59 minutes and 59 seconds, your clock reads noon (or midnight) and one second later all the counters go to 00:00:00. You can eliminate the seconds readouts in a practical clock, but you have to keep the divide by ten and divide by six counters to feed the minutes counter.

The digital clock is obviously pretty simple. How about a counter? That's somewhat more complicated, but only because of

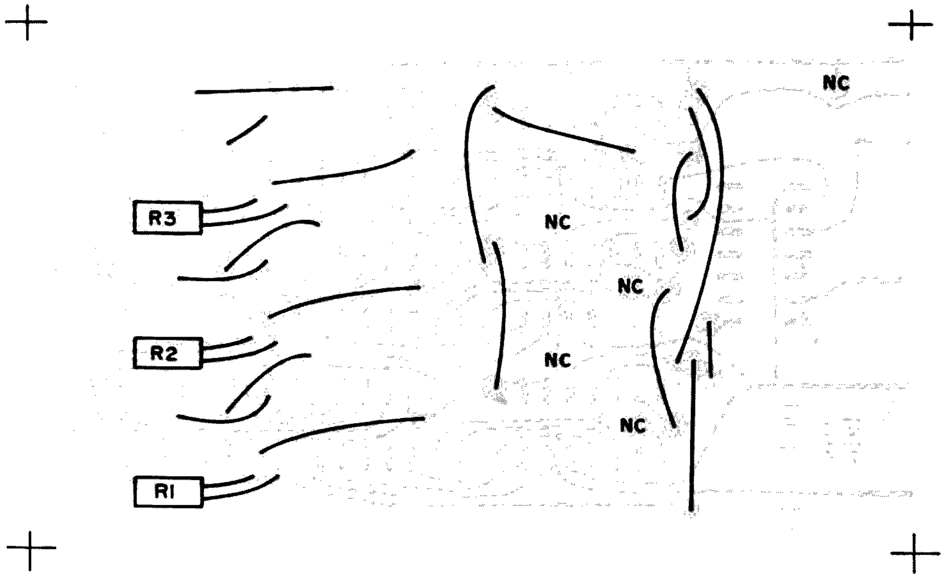

Fig. 8. Jumpers and IC alignment diagram.

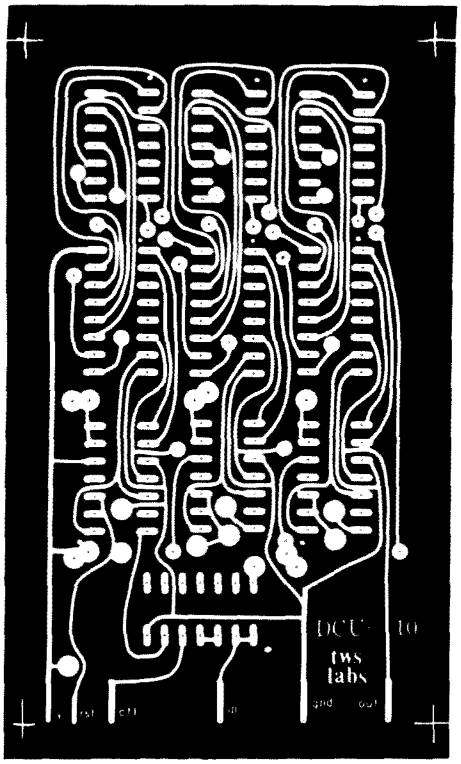

Fig. 9. Foil side, PC board (full size).

the gating. This time we will consider the gate controlling function as well as its decoding function. Fig. 6 shows very simply how a counter works. For one second the gate is "open" or enabled, and the decade counter stages divide away. At the end of that second the gate gets closed and the decade counter stages sit and hold whatever count came in. If the input was, say, 7174 Hz, those are the numbers that will show up on the display – because in one second there were seven thousand one hundred and seventy-four negative transitions counted. Obviously, the accuracy of the one second gating signal is important; that's why you are likely to use a 1 MHz crystal oscillator, divided by a million (6 decades), so any errors are divided by a million, too. You must also reset all the display counters just before you start counting. Otherwise, the first time the counter will show 7174 Hz and the next time 7174 more, so the display will show 14348 Hz (unless you run out of digits). You can see, too, that the gating signal could be 10 Hz; now you can count to a tenth of a cycle for super accuracy. The gating signal can be faster than one second, too. A 1 ms signal will display kHz. Selecting the length of timing signal (and where to put the decimal) depends on how many readouts you have and the maximum operating speed of the gates and counters. A basic counter contains a timing circuit, gating circuit, gating, and displays.

How do you get a DVM? There are a couple of methods. One is simply controlling

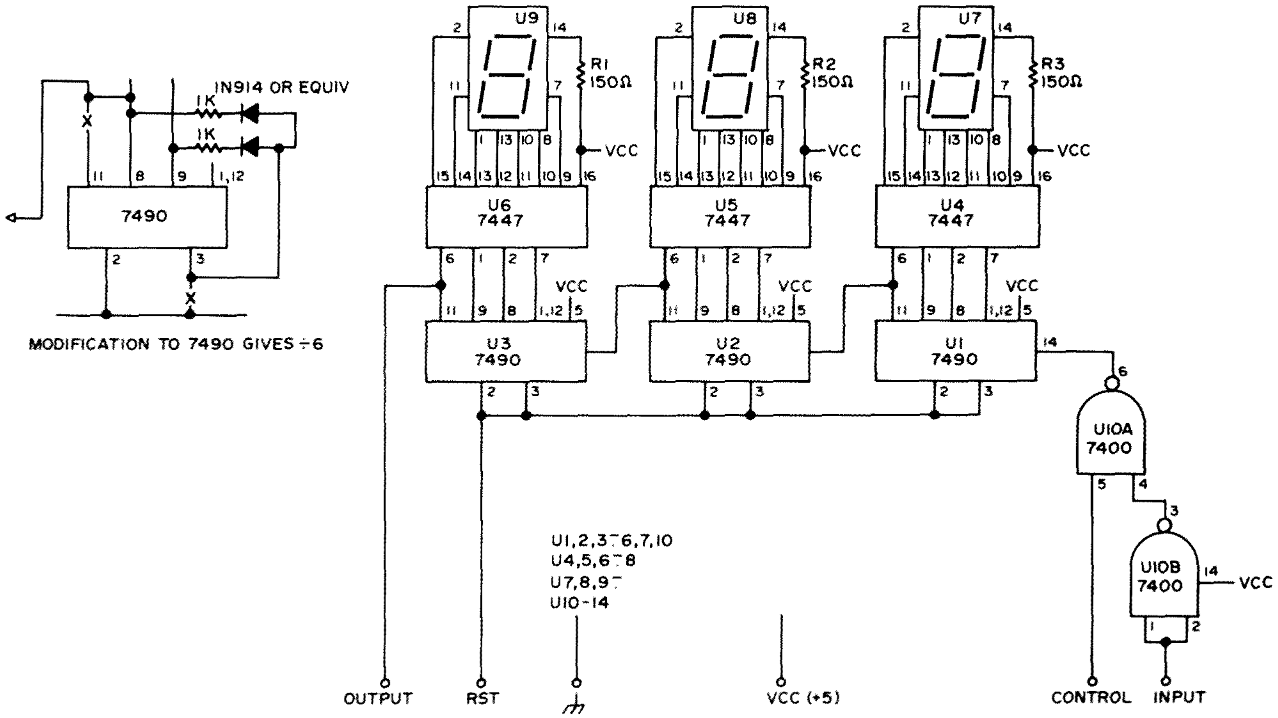

Fig. 10. Schematic diagram with modifications for clock and counter applications. Note: Link all pin 3s on 7447s and ground, for blanking readouts during count in counter if desired.

1. Insert wires through top of board (Fig. 8) for top 1/3 of board.
2. Check to insure no two wires cross and no wires cover or cross IC pin holes.
3. Stick in readouts and 7447s to hold wires in place while you turn board over and solder wires in place.
4. Solder in only 7447 ICs and trim wire leads. DO NOT SOLDER READOUTS IN YET. Make sure 7447s are in right-side-up before soldering.
5. Insert and trim the three wires in the middle of the board.
6. Insure wires do not touch, and solder and trim.
7. Insert wires in the lower third of board; make sure there are no wires touching or crossing IC pin holes.
8. Solder, trim, recheck for wires touching.
9. Insert 7490s and 7400 gate; observe markings to keep from putting ICs in upside down.
10. Solder in ICs and prepare to mount readouts.
11. Insert readouts.
12. Put board against flat surface foil side up and push readout pins down until readouts are aligned and are even with tallest ICs on board.
13. Solder only pin 1 and pin 8 on each readout.
14. Turn board over and readjust readouts as necessary to make the surfaces line up with each other.
15. Carefully turn over and solder the remaining readout pins.
16. Run jumpers on foil side of board from pin 14 on one IC to pin 11 on the other. Allow one side of the wire to stick roughly 1/8" through front of board – this will become a test point.
17. Make sure jumpers clear all pins on foil side of board. Solder jumpers.
18. Run two approximately 2" long insulated wires from the guide hole and pad near the board + 5 input terminal.
19. Connect each wire to the pad that connects the bottom of R2 and R3 (Fig. 8) to pin 16 of their respective 7447s.

Table 1. Step-by-step construction.

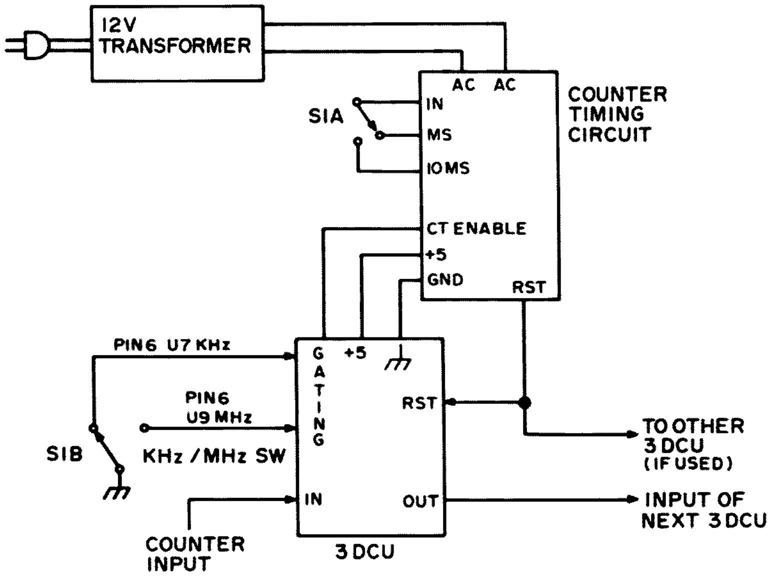

Fig. 11. Connecting a 3 DCU for a nearly 30 MHz 3-digit counter that can read out a transmitted frequency to 100 Hz. Adding the other DCU makes a 6-digit counter that will indicate to 200 MHz with a preselector.

the frequency of an oscillator with a voltage – a VCO. The better method, one you've probably heard of, is the slope integration method. You merely control the output of a constant current generator with the input voltage. The constant current generator feeds a relatively large capacitor. The capacitor either charges in a hurry (large input voltage) or trickles (low input voltage). The charging of the capacitor generates a ramp voltage. The ramp turns on a gate and the gate stays open as long as the capacitor charges. While the gate is open, a timing signal puts pulses through it and the decade counters count and display the pulses. Fig. 7 shows the basic circuit and wave forms for a "slope integrating" DVM.

Well, by now you're probably ready to try your luck at some digital beauty. You may not be too excited about the ten light bulbs for a readout, so just use the popular seven bar types. The seven bars are decoded to shape the forms of numbers 0 through 9. A decoder is available for them and even contains drivers for the LEDs in the 7 segment readout. The decoder is appropriately called a BCD to 7 segment decoder/driver.

The 3 DCU project uses 7 segment readouts and IC decade counters for compactness. The entire three digits fit on a 2" x 4" PC board. A single sided board was used to allow versatility. You will have to run a few jumpers (or use the diagram showing the jumpers for the standard DCU to lay out a pattern for the other side of your board, if you don't want a special application). You can etch your own cards or buy one already etched and drilled. In fact, you can get a complete kit of parts from TWS Labs, PO Box 357, Provo UT 84601.

Begin construction by putting in the jumpers as shown in Fig. 8. Step-by-step assembly instructions are given in Table 1 for a foolproof assembly. Fig. 9 shows the PC layout (foil side). Fig. 10 is the schematic.

After assembling your 3 DCU, check out operation by connecting +5 and ground. Run a ground to RST, and then touch a ground on and off the input terminal of the card. The digits should flash away. If you could actually touch only once, you would be able to count the times you touch the ground. The decades will count up to 30 MHz and, though you may think you touch only once, chances are you will touch the ground many times and the decades will tick away. As long as they count pulses, you will know the 3 DCU is working. Test reset by removing its ground – the 3 digits should go to zero.

Applications

The applications for 3 DCUs are nearly

unlimited: For example, they will work to 200 MHz with a preselector. A pair of 3 DCUs side by side gives a 6-digit counter. An FET, UJT, and time base, along with a 3 DCU, will make a great DVM.

Counter

Currently, there is a timebase and power supply kit available from TWS Labs that makes a great counter for ham rigs when used with a 3 DCU. Fig. 11 shows how to hook up the timebase. With two 3 DCUs and the timebase, you can have a 6-digit 20 MHz counter.

Timer

Obviously, 3 digits are perfect for a 10 minute timer for ID purposes. You modify the middle digit to divide by six instead of ten (see Fig. 10). Now merely feed the DCU with one second pulses. This can be ÷6 and ÷10 the ac line or ÷ million a 1 MHz crystal. Just use an n/c push-button switch to keep the reset line grounded. Thus, when you want to reset the clock to 0:00, you just momentarily depress the switch. As soon as you let up, you remove the reset and the 3 DCU starts ticking off the seconds again. Fig. 12 shows a 10 minute ID timer set up using 3 DCU. A kit to make a 10 minute timer with power supply and warning lamp is also available from TWS Labs. All you add is a 3 DCU.

Clock

Add one more 3 DCU (modified for 6 count as mentioned before) to the 10 minute timer circuit, and you have a digital clock. Fig. 13 should give you some ideas on how to hook it up for 12 or 24 hour operation. For a clock you must have a way to set the time, so a fast advance and a hold position are used. You merely advance the clock slightly past the desired time and then hold the count until WWV beeps, or whatever; when you let up, the clock starts ticking away the seconds. A clock addition is also available from TWS Labs.

DVM

This one will take a little experimenting on your part because the only kit available is for converting a frequency counter to a DVM. If you are using the timebase kit with your 3 DCU, it may work. It is available for $9.50 from R. S. Stein, 1849 Middleton Ave., Los Altos CA 94022. (Note that this is a PC board for the DVM only.) If you want to experiment, you might try Fig. 14 for ideas. If you allow your 3 DCU to trigger an external flip flop and drive an LED, you will have the makings of a 3½ digit DVM. Once you are measuring volts, it

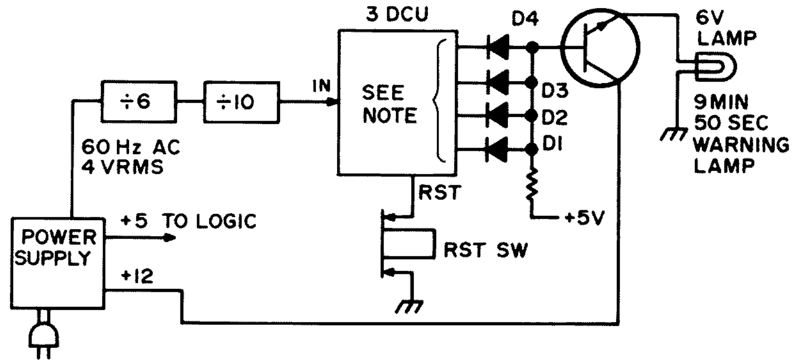

Fig. 12. Hook up 3 DCU as a 10 minute ID reminder. Warning lamp goes on at 9 min 50 sec, for 10 seconds. Note: D1 = pin 8 U1; D2 = pin 9 U1; D3 = pin 1 U3; D4 = pin 11 U3. U2 modified to ÷6 (see Fig. 9).

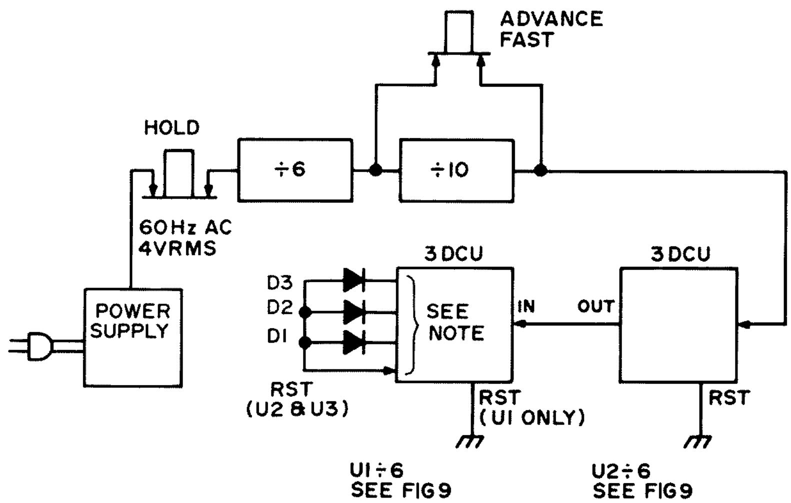

Fig. 13. 12 and 24 hour 6-digit clocks using 3 DCUs and simple fast advance and hold switching. Note: For 12 hour clock, D1 cathode = pin 1 U3; D2 cathode = pin 8 U2; D3 cathode = pin 1 U2. For 24 hour clock, D1 cathode = pin 8 U3; D2 cathode = pin 9 U2; D3 not used.

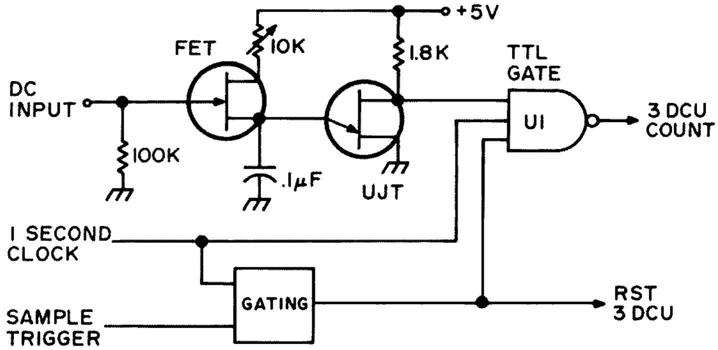

Fig. 14. Here is a place to start. For a simple DVM, the FET current charges the capacitor in the UJT relaxation oscillator. Then gating allows the 1 sec clock to enable gate U1. Then, depending on the frequency of the UJT, pulses will pass through gate U1 and be counted in the 3 DCU. Make it so 1 volt equals 100 pulses into the DCU.

will be easy to measure current (voltage dropped across a standard resistor), Ohms (standard current through the unknown resistor), ac (using a rectifier system), etc.

Well, I'm sure you found one or many ideal projects for your ham shack using a 3 DCU or two. I have several units around the shack and they are all as handy as can be. Although we've only scratched the surface, some of you will probably add preselectors to your counters for 200 MHz operation. Use 3 DCUs for counting dial pulses – only you and your imagination know for sure. For whatever the use, you'll enjoy entering the fascinating world of blinking digits. ■

Parts List (refer to Fig. 10)

R1,2,3	150Ω ¼ resistor
U1,2,3	7490 decade counter-TTL
U4,5,6	7447 BCD to seven bar decoder/driver
U7,8,9	Seven bar readout Opcoa SLA 1 or equivalent common anode
U10A,B	7400 quad, 2 input NAND gates (only two used)
PC board	PC board for 3 DCU available for $2.50 ppd. (See below for address.)
*Kit	Complete kit of all parts, including PC board, all ICs, instructions, and readouts, as well as applications for 10 minute ID timer, stop watch, digital counter, 6-digit clock, etc., is available for $17.99 plus postage from TWS Labs, PO Box 357, Provo UT 84601.

LETTERS

from page 4

like 2 meter ham gear. I bought a 45 and now want a 65. Bought a Multi-2000 and now they have a Multi-5000. Ah, well – guess that is the price one pays for not waiting to see what the market will offer in the future.

Keep up the good work with the magazine.

Carl Hattan K0BZV/KL7
Cold Bay AK

Don't Forget Our Gals

This is my first subscription to *73 Magazine*. This is truly a fantastic book. I am not a ham operator, although I would like to become one. I just enjoy electronics and hobby work. I am not that advanced in electronics, but I enjoy very much reading and learning about ICs and how they operate. Keep up the good work fellows – you have a good thing going.

James Cox
Lumberton NC

Walk on Water?

The reason that I'm writing to you is that the November issue of *73* has just arrived and I have this tremendous pressure to congratulate you. It's been a long time since 1960, Wayne. So – my most sincere admiration and best wishes! I think you are ready to walk on water – barefoot. And thanks from my Novice friends for your books, tapes and the magazine.

Ken Cole W7IDF
Vashon WA

African Report

I thought I would drop you a line to say I have really enjoyed your *73 Magazine* since finding it in the BX. I had a Novice ticket a couple of years back. Since I have started to read your magazine, my interest in amateur radio has been reawakened. I have taken the Conditional test and now I am waiting on the FCC to reply. I would like to see some articles on the new Heathkit HW- and SB-104s, in addition to more on the HW-7. My only other point is, how would you like to be in Addis Ababa, Ethiopia, at 9000 feet with excellent signal reception, and not be able to operate due to government restrictions? Anyway, I do listen to all those rare African stations – and wish.

Carl L. Moss
Addis Ababa
Ethiopia

P.S. Saw *73 Mag* on sale in Athens, Greece in August at various newsstands.

Denver Oining – Etc.

I think it would be nice if you would sponsor a US-wide ham meeting and luncheon directory.

Denver has two open clubs and two weekly open luncheon groups, and many other cities have the same. Many hams would work their travel itineraries around in order to attend some of these groups if they could know where and when in advance.

I would appreciate it if you could put a small notice in your magazine of the "Hams East" and "Hams West" luncheon groups in Denver.

Both meet in cafeterias, start at 11 am and continue until the last ham leaves. No programs, no formality. Just lots of good rag chews. Wives are welcome and many attend.

"Hams East" – Tuesdays, 11 am, Wyatt's Cafeteria, 2466 S. Colorado Blvd., Denver CO;
"Hams West" – Thursdays, 11 am, Wyatt's Cafeteria, Alameda Ave. and Wadsworth (Villa Italia Shopping Center), Lakewood CO (Denver's largest suburb).

Big plans are being made for the 1976 convention, and since everyone seems to get to Denver sooner or later and we really believe in welcoming strangers, don't overlook our two weekly ham luncheon opportunities. The 146.07 T – 146.67 R Castle Rock Repeater Group repeater exists for the sole purpose of rag chewing. All breakers are recognized; traffic information, road and street directions, phone patches, traffic, and what have you is handled and never a discouraging word. We do not put up with smart aleck guys who object to what type conversation or use (it must be legal) our repeater is used for. Our only insistence is that all breakers be recognized and rag chews cease until the breaker's inquiry or needs are met.

Remember – pass the word – 146.07 T-146.67 R is an open repeater with a 3 minute timer and visitors and their needs are at the top of our priority list. Above all, don't be afraid to "break." We expect you to, and, should anyone experience any discourtesy, the matter will be positively dealt with by the group members. I am glad to say that this situation occurs so rarely on this repeater that I can't even recall the last time, and we all hope the last time was truly the last.

Howard A. Moore K0HPF
Lakewood CO

HP-45 Fun (Cont.) (Cont.)

I have been reading *73s* for several years and this is my first attempt to write and say just how pleased I have been with the magazine. It's just plain fine. Keep it up.

In regards to the article that appeared in Letters (October 1975 issue) entitled "HP-45 FUN," the gentleman tells how to call out the timer mode on the HP-45. Well, this is all fine and dandy, BUT it has one major problem in that the timer runs slow (not 60 counts of the timer = 1 minute in real time). I've made several checks with the HP-45 vs. WWV and a counter, and found the HP to run about 14% slow. I've also checked other HP-45s and they seem to be the same way.

Just thought this info may be of interest to the readers, and users of the HP-45.

William Christian WA5KLK
Beaumont TX

RTTY Autocall - the Digital Way

by
L. W. Sanders VE6BV
2404 37 St. S.W.
Calgary
Alberta T3A A39

As earlier versions of a character recognition device were called "Selcal," it would only follow that newer versions would be called "New Selcal." However, I will stand on the name character recognition device, for that is the only correct way to describe the following unit.

Most previous Selcals had long and detailed methods to decode one character at a time, then another character, and so on, by means of gates, inverters and such. This unit decodes all letters of the alphabet as well as all machine commands, by means of its inherent design. All that is required to change a decode structure is to move 4 wires. Decode can be changed in less than 3 minutes and without paper, pencil, or decode charts, etc.

Again, earlier Selcals used transistors, diodes, KCs and many resistors and condensers. This unit uses ICs, 4 resistors, 2 condensers, and 1 diode. Size again was something else. Some boards that I have seen were 12" x 12" = 144 sq. inches, others, 8" x 8" = 64 sq. inches. The newest CRD (3" x 7" = 21 sq. inches), is fitted with a 12 pin edge connector and will fit inside a Hal ST6 teletype demodulator nicely.

This new CRD includes (as do the Selcal units) such features as the $\overline{\text{NNNN}}$ shut down, force on/off, and four character decode.

A second feature has been added, with which I will now blow some minds.

For most amateurs the acquisition of a model 28 teletype unit and its stunt box is just a dream, but take heart, for with the STUNT BOX CRD unit, the lowly model 12, 14, 15 or 19 can now have the stunt box features of the 28.

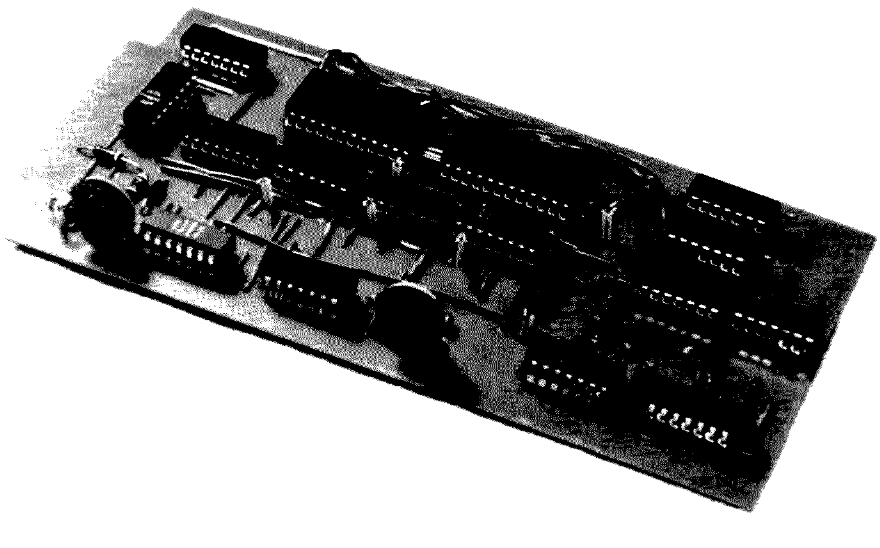

Mother board, top view.

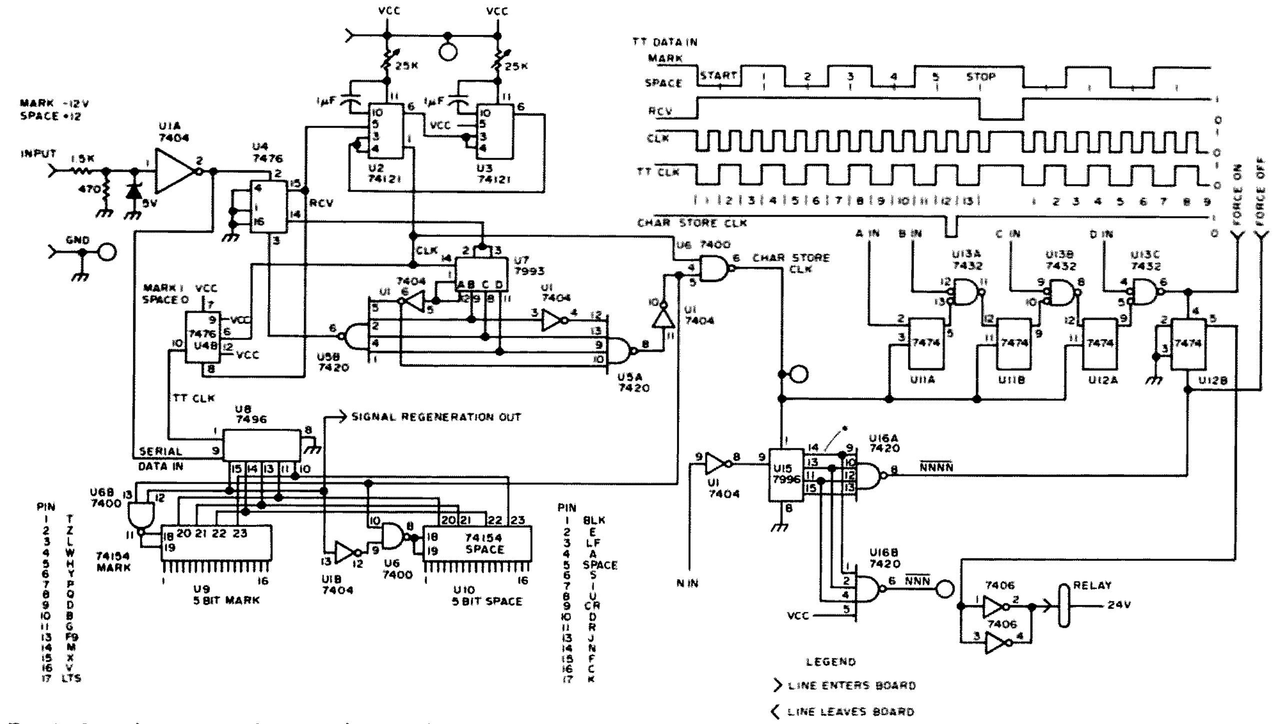

Fig. 1. Complete circuit diagram along with a timing chart.

The model 15 that I own is just about as loaded as I could make it, but I still needed more functions, for station accessories such as keyboard-operated perforated turn on/off and T.D. turn on/off transmitter control.

When a 100 wpm machine becomes available, I will use an electronic speed converter and the CRD to allow incoming signals to change speeds for me.

Also in this area, hams may have the opportunity this winter to access a minicomputer via a 2 meter transmitter to a terminal station, then again via RTTY to the computer, thus needing auto transmit, shut down and ID on the terminal station. The CRD stunt box will do it for us. 'Nuff said.

All this, remember, is in a 3" x 2" x 7" cube still inside an ST6 cabinet.

As an active autostart frequency exists in the western area of Canada and the northwestern United States, and there is a lot of traveling in my work, I would find, upon returning home, a large amount of paper to be inspected and possible queries to be answered.

A selective calling device had to be installed. After looking at many different designs I made an attempt to build one. A RTTY Selcal with TTL logic only met with dissatisfaction and an unstable decode system. After approaching Cal W9ZTK, he suggested a new approach to the decode trouble; a CRD with TTL logic was begun. This unit further reduces the number of integrated circuits required, plus it appears to have several most desirable features as well.

As to the ease of changing decode structure, having just received a new station call, I timed myself. It required 3 minutes to set up a total new decode structure.

In the photos a hand wired board is shown as well as a finished mother board. The hand wired unit was made up to test a stacked board concept and still only have one edge connector. It worked, and this opens up a new idea. How about a stunt box as well as a CRD? Herein lies an article.

A complete circuit diagram along with a timing chart is given in Fig. 1. When going through the theory of operation, check Fig. 1 or the individual circuit drawings, which will assist in understanding the operation of this unit. Some logic levels are given, in particular, on the shift register, character recognizing drawing.

The following approach to a selective calling device is unique. First, all 32 keyboard signals can be detected and used in the decode sequence. There is no need for charts, truth tables or what have you. One wire from a character output to decode input is all there is needed.

Liberal use of TTL logic circuits has all but eliminated any chance of the unit not operating, as well as keeping the cost down. In fact, there are only four resistors, two condensers, and one zener diode on the board; of these, two resistors and the zener are interface components.

The CRD is usable as a selective calling

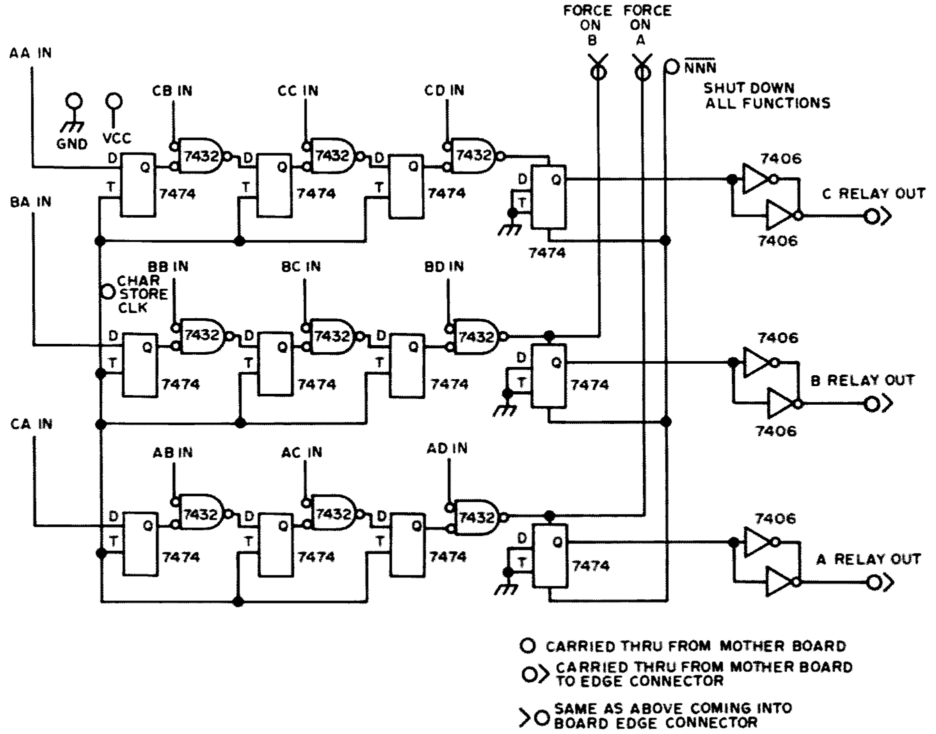

Fig. 2. Stunt box board.

device as well as a local stunt box at the *same time.* This itself is new. In fact, the whole thing is new.

Theory of Operation

The incoming TTY signal (data) is the standard FSK line. This line is going from 12 volts minus (mark) to 12 volts plus (space). This voltage is applied to a voltage divider comprised of a 1.5k and a 470 Ohm resistor. A 5 volt zener diode is placed in shunt with the 470 Ohm resistor. This limits any input signal that is greater then the proper TTL input level. Output of the inverter is fed to a 5 bit shift register, as well as a control flip flop.

Control Flip Flop

This half of the flip flop controls the start or stop of a stable clock. As the space data comes in, it is inverted in U1a putting a low on pin 2 (set) which causes pin 15 to go high where it will stay until a clear pulse comes along, to change the state of the flip flop. The high on Q pin 15 is fed to the enable pin of a monostable multivibrator or clock.

The **CRD** is usable as a selective calling device as well as a local stunt box at the same time . . .

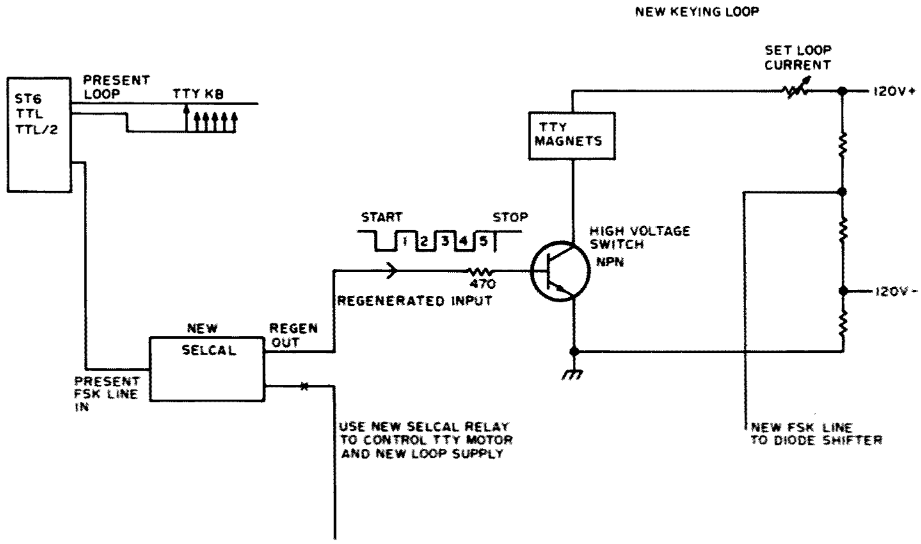

Fig. 3. Station interface.

74154 TRUTH TABLE

ENABLE	BINARY ADDRESS D	C	B	A	OUTPUT LINES 0	1	2	3	4	5	6	7	8	9	10	11	12	13	14	15
0	0	0	0	0	●	1	1	1	1	1	1	1	1	1	1	1	1	1	1	1
0	0	0	0	1	1	●	1	1	1	1	1	1	1	1	1	1	1	1	1	1
0	0	0	1	0	1	1	●	1	1	1	1	1	1	1	1	1	1	1	1	1
0	0	0	1	1	1	1	1	●	1	1	1	1	1	1	1	1	1	1	1	1
0	0	1	0	0	1	1	1	1	●	1	1	1	1	1	1	1	1	1	1	1
0	0	1	0	1	1	1	1	1	1	●	1	1	1	1	1	1	1	1	1	1
0	0	1	1	0	1	1	1	1	1	1	●	1	1	1	1	1	1	1	1	1
0	0	1	1	1	1	1	1	1	1	1	1	●	1	1	1	1	1	1	1	1
0	1	0	0	0	1	1	1	1	1	1	1	1	●	1	1	1	1	1	1	1
0	1	0	0	1	1	1	1	1	1	1	1	1	1	●	1	1	1	1	1	1
0	1	0	1	0	1	1	1	1	1	1	1	1	1	1	●	1	1	1	1	1
0	1	0	1	1	1	1	1	1	1	1	1	1	1	1	1	●	1	1	1	1
0	1	1	0	0	1	1	1	1	1	1	1	1	1	1	1	1	●	1	1	1
0	1	1	0	1	1	1	1	1	1	1	1	1	1	1	1	1	1	●	1	1
0	1	1	1	0	1	1	1	1	1	1	1	1	1	1	1	1	1	1	●	1
0	1	1	1	1	1	1	1	1	1	1	1	1	1	1	1	1	1	1	1	●
1	DON'T CARE				1	1	1	1	1	1	1	1	1	1	1	1	1	1	1	1

NOTE 5th BIT SELECT

Fig. 4. 74154 truth table.

Clock

This clock is very stable; temperature and supply voltage changes appear to have little effect on its frequency. As the control signal is applied to the Schmitt trigger input (pin 5) pulse, triggering occurs at a certain level of rising voltage on this pin. When the monostable fires, the output pulse width is independent of the input pulse signal. The output pulse width is controlled only by external timing components, in this case the 25k variable resistor and the 1 uF condenser. The output pulse from U2 (pin 6) is fed to U3 (pins 3 and 4). As the Schmitt trigger input is tied to Vcc the second monostable is fired as soon as it gets a negative going pulse from U2 (pin 6); here again output pulse width is independent of input pulse width, being again controlled by the 25k variable resistor and the 1 uF condenser. The output pulse of U3 (pin 6) is fed back to pins 3 and 4 of U2. Hence a train of pulses are generated and will run on forever or until U2 (pin 5) enable is taken to ground or low. *Notice:* There are two timing pots on this clock. One pot sets the pulse width or time on and the other sets the pulse repetition rate or off time. The clock signal is 5.5 ms on and 5.5 ms off for 60 wpm. The output clock signal is fed to a divide by 16 counter, a divide by two, as well as a gate.

Divide by 16 Counter

When the control flip flop U4 starts the clock, Q pin 15 is high; therefore, pin 14 is low. This signal is applied to pins 2 and 3 of the divide by 16. This enables (pin 1, U2) allowing the clock pulses coming in to be counted. When the count twelve is reached, gate U5a changes to a low which is inverted by U1b and applied to one input of NAND gate U6a. As the other input to NAND gate U6a is coming high at this time, a negative going pulse is formed. This pulse is used to clock the character store. As the clock U2 (pin 1) is still running, at this point U7 continues to count. At clock pulse 14, gate U5b detects all highs at its input, which makes pin 6, U5b low (which in turn is fed back to pin 3 of U4). This low makes U4 change state; pin 15 of U4 goes low – stopping the clock. U4 (pin 14) then goes high, resetting the divide by 16 counter to zero.

TT Clock

While the clock pulses (U2, pin 1) are going to the divide by 16 U7 and U6a, it is also being fed to U4b, pin 6; here it is divided by 2 and the (pin 10) U4b not Q output is now 11 ms wide. This signal is used to clock data into the shift register U8, pin 1. When a TTY signal is received, inverter U1a sends a signal to U8, pin 9, where it sits until a clock pulse comes to shift it into the first register. It sits there, waiting as well as the new information on pin 9, which is also waiting to be clocked into the first register, with the information in the first, moving on to the second. This action continues until all seven bits of data are entered into the register. But I do not need all the seven bits; just the middle five contain printing

Mother board with stunt box board, top view.

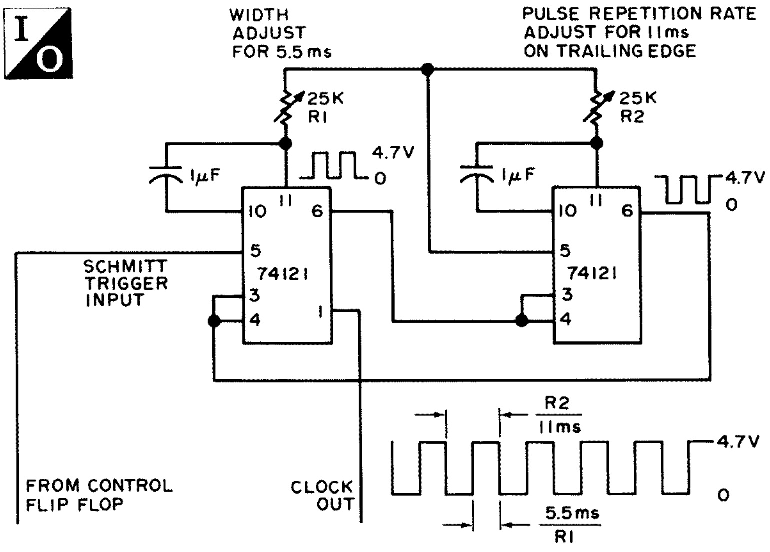

Fig. 5. One shot clock.

information, so at the time the first bit is shifted out of the register, the five needed bits of printing information are in the register. At this time the outputs are inspected and information contained in the register is passed to a four line to sixteen line decoder. By the way, the inspection takes place on the last part of count 12. (See TTL clock timing chart.)

Character Inspection and Decode

At count 12 gate U5a goes low, inverter U1b is high. This signal is fed to U6b input one as well as U6c. The output of U8 contains printing information in its 5 registers at this time, using only the four outputs to address a four line to sixteen line decode 74154. As this chip is addressed in binary, I can say that the output of U8 is a binary word msb (most significant bit) 01101 lsb (least significant bit). Forget for just a short time the msb 0. Let's look at 1101; this is binary number 13. When I check the truth table for a 74154 chip, I find a low on output 13 with all other outputs remaining high. If binary number 0001 were addressed to this chip, what output would be low? Correct, it is output one. Now you can see how by taking a 4 bit binary signal and applying it to a four line to sixteen line decoder I will get only one low output for any binary number, input from 1 to 16. Serial baudot information is five bits long, so now take the 0 that I set aside a few moments ago and feed that 0 to a gate U6b and an inverter U1d, which in turn feeds second input U6c. A high and a low on U6b inputs will not allow U6b's output to go low; thus U9 pins 18 and 19 are inhibited, and all outputs from U9 will be high. But a low on inverter U1d gives a high out to U6c. A high on second input of U6c gives a low at its output, which enables U10, allowing output 13 to go low, where all other output pins remain high. Hence, I have decoded one out of thirty-two possible TTY combinations. One note U9 decodes all characters with the 5th TTY bit a mark, and U10 decodes ones with the 5th bit a space. The job is just about done now.

Sequence Character Recognition

As I decode only one combination of TTY binary at a time, I must store them so that a series of characters allows a turn on or turn off. This is done by feeding a selected character into a type D flip flop. If information is fed into the D input of the chip, it is passed on to the Q output at the time of the clock pulse; Q will stay in this state until the next clock pulse.

The Q output is now low (pin 5, U11a). When we place a second input low on U13a (taken from selected 74154 output), the output of U13a remains low. This low is fed to the D input pin 12, U11b. At the next clock pulse this low is transferred over to the Q output of this chip, and so on until the four selected inputs or turn on has been received. If a wrong character is received, the whole chain must be started again. For A in, B in, C in and D in must go low, each in turn for the correct turn on to be made. When the fourth character has been received, output pin 6, U13 goes low which sets U12b and makes Q pin 5 high. This high is fed to an open collector inverter which in turn goes to ground pulling in the motor control relay.

$\overline{\text{NNNN}}$ Shut Down

Because the N signal is low when selected from 5th bit space 74154, an inverter is used to get correct sense on data input to another 5 bit shift register U15. When four Ns are received in order, the output of the shift register is high. When fed to a four input NAND gate, output goes low (U16a). This signal is sent to the clear input of the relay control flip flop U12b making its Q output go low and the open collector inverter's output high, turning off the relay. A second four input gate U16b is set up to give an

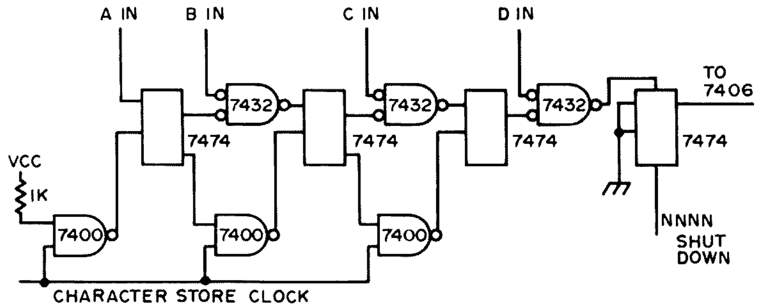

Fig. 6.

output on $\overline{NNN}$; this second shut down is used for a stunt box control.

Stunt Box

I have used a new approach even here. The stunt box version is really just a second printed circuit board that is tacked on top of the CRD. On the stunt box board there are three new and separate character store flip flops. Each "channel" can be programmed completely apart from the others; hence decoded TAPE can turn on a tape perforator, CW ID could start an auto ID unit, etc. With any of the stunt box controls $\overline{NNN}$ shuts down all stunt relays but will leave the printer still going.

Power Supply

Power supply requirements are very low – 5 volts at about 500 mA regulated and 24 volts unregulated are just about all that need be said. An LM309 5 volt regulator is a good bet for the 5 volt line.

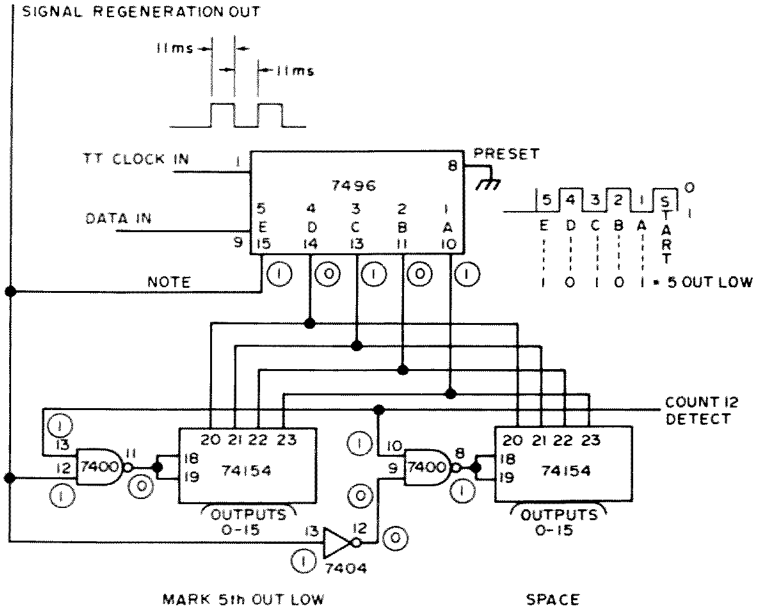

Fig. 7. Regenerative repeater.

Station Integration

Operation and interfacing into a modern or not so modern RTTY station is best described as easy. Fig. 3 is a suggested hookup. The most desirable results will be found in the stations using one of Hoff's demodulators, ST6 TTL, TTL/2. These demodulators have an auto print section in them that turns on before the Selcal will receive any TTY data in. This makes for greater immunity to unwanted turn ons. One feature not talked about too much is signal regeneration. This is something that all amateur operators should make full use of, as our keyboards are often somewhat less than perfect. Signal regeneration is built into the CRD; by bringing a lead out from pin 15, U8, a correctly timed signal is available for transmission. As information is shifted through the shift register U8 by a local clock which is running at a pulse repetition rate of

Operation and interfacing into a modern or not so modern RTTY station is best described as easy . . .

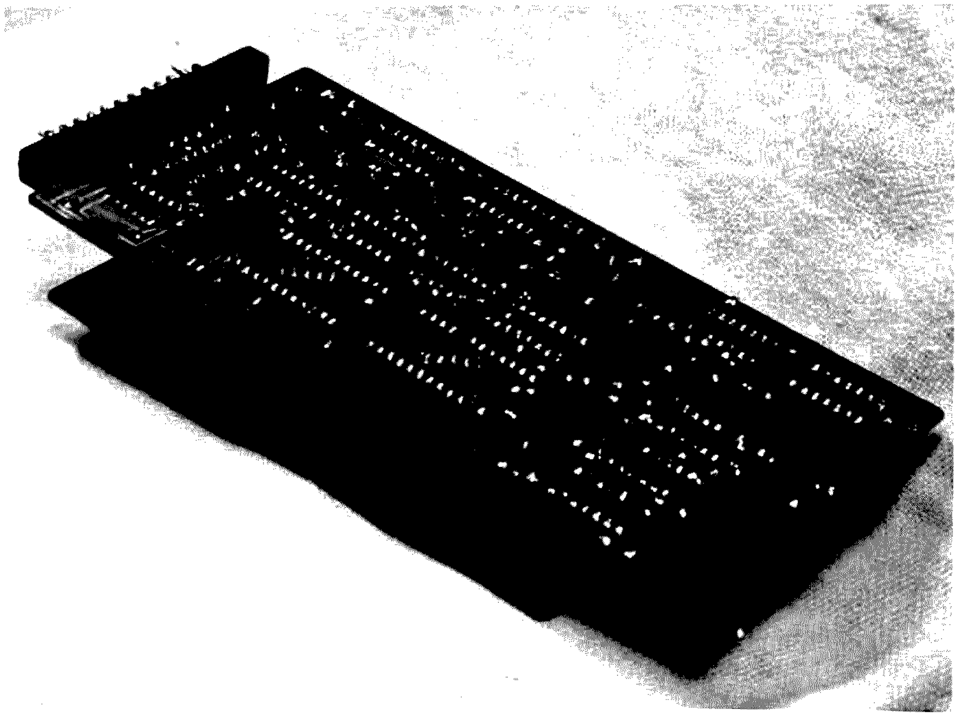

Mother board with stunt box board, bottom view.

22 ms, a bias-free signal is present at this pin. The station hookup shows how to use this regenerated output to the best advantage.

Uses

This CRD could be teamed with a simple phase locked loop demodulator for a real good 2 meter repeater control system. First thing that crosses my mind is to turn heat on in the winter and off in the summer. You think of a few more.

Conclusion

Printed circuit boards and board layouts are available from the author for those who might need them.

The printed circuit boards that I have are about 3¼" x 7". This is the mother board; it has an edge connector on it for a 12 pin connector.

The stunt box board is just a bit smaller; its size is 3" x 6", and it fits nicely into an ST6 (Hal type); you just might remove the wide shift boards and place the CRD in there.

One thing that just might happen is, your call may contain two identical letters, e.g., 6AII. Normally you would decode letters A, I, I; however, you would find that your CRD would trip on the first I. This could be fixed by moving decode to Y or 6 letters A, I. This would give you a four character decode once again, but if others in your area have calls Y or 6, letters A, I (A through Z), your machine would trip off when that combination came along (most unwanted). So a change in clock signals is needed. One way, as yet untried, is shown in Fig. 6.

This circuit will clock the 7474 flip flops in sequence and should eliminate the problem of a turn on with I, I.

I would like at this time to thank Cal W9ZTK for an idea and the rest of the fellows that are on the WestCan Autostart frequency of 3632.50 MHz. ■

Parts Needed for the CRD

1.5k Ohms ½ Watt	1 only
470 Ohms ½ Watt	1 only
25k potentiometers	2 only
5 volt zener diode	1 only
74121 one shot	2 only
7404 inverter	1 only
7400 NAND gate (7437 used with stunt box)	1 only
7476 J-K flip flop	1 only
7496 5 bit shift register	2 only
74154 4 line to 16 line decode	2 only
7493 divide by 16	1 only
7420 4 input NAND gate	2 only
7474 D type flip flop	2 only
7432 OR gate	1 only
7406 open collector 30 volts inverter	1 only
	Total count 16 chips

I/O

Believe Me - I'm No Expert!

by
Wayne Green W2NSD/1
Peterborough NH 03458

Just in case any *73* readers are laboring under the impression that I know a whole lot about computers, minicomputers, or even microcomputers, let me put that delusion to rest. I know more about Arabian horses than I do microprocessors (uPs), and I am not a known expert on Arabians.

Before writing about microprocessors I wanted to clear the air and make sure that in this field, at least for the time being, I am a reporter, not an expert. Hell, I'm not even an advanced amateur yet, but give me time . . . I'll get there.

After talking with the Sphere, MITS and Southwest Tech people during a hurried excursion out west, I got the distinct impression that, from the viewpoint of the user, the differences between the various microprocessors are mostly academic and that from an application view one will do pretty much what another will. Thus, whether you settle on a 6800 system, an 8080 system, a PACE, or whatever, most of your computer time will be spent waiting for the operator, not for the machinery.

Prototype of the Sphere 6800 system.

Until my visit to the manufacturers, I hadn't realized how very early we really are in the history of personal computers . . . and particularly in microcomputers. Sphere had, in early August, one breadboard system running – but still with some glitches to be worked out. They had some program material worked out which they would then adapt to their system, eventually to be available in a 1K PROM.

MITS had their 8800 up and running, but the floppy disk system was still in development, and I gathered that the only bulk storage in use at the time was from cassette tape. Any computer system for business or for much game playing will need at least a floppy disk system.

Southwest Tech had a breadboard system going too, perhaps just a little bit further along than Sphere. I suspect that these systems have had a lot of help from Motorola.

The Sphere group is working diligently on many areas of development, with most of the work being done by a couple of the fellows. They were setting up their production facility, getting the glitches out of the prototype, getting the loader PROM ready, working on another PROM for BASIC, getting started on a floppy disk system complete with an assembler, editor and operating system called FDOS.

They also were working on a system which they claimed would be faster than a floppy, a quarter inch tape using eight tracks at 1600 bpi in a self-loading cartridge. One tape would have as much memory as 120 disks . . . about 30 megabytes . . . and the system would hopefully cost around $3000 including the controller and software. Next they had in mind a jig which would automate the plugging in of the cartridges. A set of five in one system would then permit 1500 megabytes of storage! That's

Mike Wise, President of Sphere, showing the complete microprocessor system.

1.5 gigabytes (pronounced jigabytes). This would run under $7000 for the basic system. It's exciting to think about. The maximum access time for a cartridge would be 20 seconds, which would put the average time at 10 seconds for random access.

Mike Wise at Sphere put me onto a firm that makes cassette drives which are ideal for computer use . . . solenoid controlled . . . and at a very reasonable price. A small system using a couple of these could be set up to run mailing lists and other indexed data. This would be great for the hobbyist who wants to make a little money on the side keeping small mailing lists . . . club membership records, etc. Or

it would be fine for the hobbyist who would like to get into business in a small way selling relatively inexpensive computer systems for small businesses. I have a feeling that we will see a lot of program development for systems like this when the hardware is available.

I suspect that the whole field of programming is going to change significantly with the introduction of relatively low cost computer systems. Where before only large businesses could afford systems, now they will be everywhere and there will be thousands of people working up programs, not dozens.

Small systems will grow as rapidly as we are able to get them running with I/O devices and memory storage devices. *73* wants to hear all it can on these developments so they can be fed back to everyone in the field. Let's have user information on interconnecting the television typewriters to the Altair 8800, the Altair 680, the Sphere, the SWTPC 6800, the Godbout PACE, etc. Ditto Teletypewriters, used tape drives, used line printers, surplus keyboards, cassette recorders, floppy disk systems, etc.

There are some exciting developments coming along in mag tape systems which are a bit high for the hobbyist, yet are great for the small business ... let's be sure to write about these ... how to look them up ... operating systems, etc.

The idea of using a PROM systems software is a good one. I suspect that this will take hold. The Sphere idea of a PROM containing an executive, I/O driver, I/O for cassette, and I/O for a video terminal may take hold too. Sphere was talking about converting source language to machine language with a PROM, converting serial to parallel ditto, etc.

MITS

My talk with Ed Roberts, prexy of MITS, was most interesting. Rather than go it verbatim, I'll engistify it for you.

I asked Ed how MITS got into the microprocessor biz and this got him going in good shape. It seems that the term microcomputer was probably originated by the editor of EDN and the micro part of it has no relationship to the power, word size or the speed of the computer involved, just the large scale integration (LSI) of the IC involved.

Before getting into the 8080 based system, MITS looked over the market to see what was available. The IMP-16, a 16-bit machine, benchmarked a couple orders of magnitude slower than the 8-bit machines, so they decided not to go that route. Actually, according to Roberts, the 8080 is not an 8-bit machine, but a 24-bit variable word length machine that has an 8-bit arithmetic logic unit (ALU) and can directly address 65,000 bytes.

At the time of the decision to go 8080 there were only four other serious possibilities ... the 8008, the 4004, the IMP-8 and the IMP-16. Since the IMPs seemed very complicated and to need a lot of external hardware, it came down to the Intel chips. They almost went for the 8008, but the nod went to the 8080 after they added up the figures ... the 8080 is about 10 times as fast as the 8008 and only costs twice as much, leaving a 5X benefit. MITS spent about eight months evaluating the systems.

The M6800 came along later and seems to have some advantages for smaller systems – according to Roberts, the I/O structure of the 8080 is better for bigger systems. The PACE seemed to be slower than the 6800 or the 8080 and it is limited to seven or nine subroutines. MITS felt that a 16-bit machine would have a difficult time competing with a 24-bit machine. If the PACE had been significantly lower in cost, that might have been a factor.

Whither Time Sharing?

Ed opined that time sharing is going to die. The data transfer rate is just too slow ... limited to about 30 characters per second (cps). And when you consider the cost of time sharing, with rates running from $5 to $7 per hour (MITS charges $2 per hour), you probably can buy a complete micro system cheaper than several months of that. Once ROM program chips are available you won't need any experts – when the power is turned on the ROM will provide the program to have the computer go to track zero on the floppy disk and load the operating program.

One problem is that as more microprocessor chips are developed this will result in the need for more hardware to be developed and, worse, more software. If the field settles in with the 6800 and the 8080 we may get a chance to develop a large number of sophisticated programs for use with these machines. If more and more microprocessor designs proliferate it could split the field so that much less is developed. The second sourcing of the 8080 by Texas Instrument and Advanced Micro Devices (third sourcing?), and the AMI second sourcing of the 6800, as well as the MOS Technology 6501, mean that these multisourced microprocessors will have a big head start over other uPs. The 8080 got a good lead by virtue of the head start of microprocessor innovator Intel.

MITS had no serious problem in deciding to

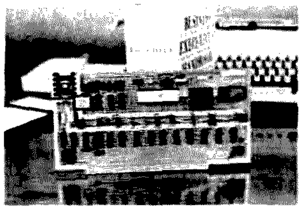

MITS 8080 CPU board.

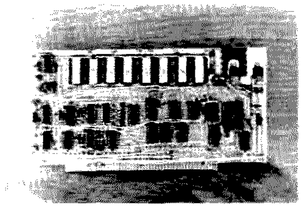

Altair 4K dynamic memory board.

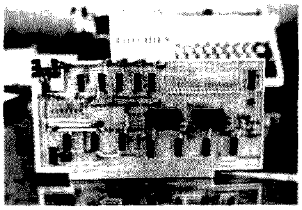

Altair serial I/O board for cassettes.

MITS work area with Altairs abuilding.

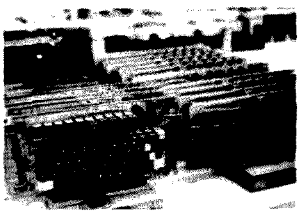

Production run of MITS keyboards.

accommodate the 6800 ... the Altair 680 backplane is exactly the same as the 8800 except for the CPU card ... and it plugs into the Altair bus.

The 6800 has two accumulators, an index register, and a stack pointer on the chip, but no general purpose registers. There is a short instruction format to access the first 256 bytes of

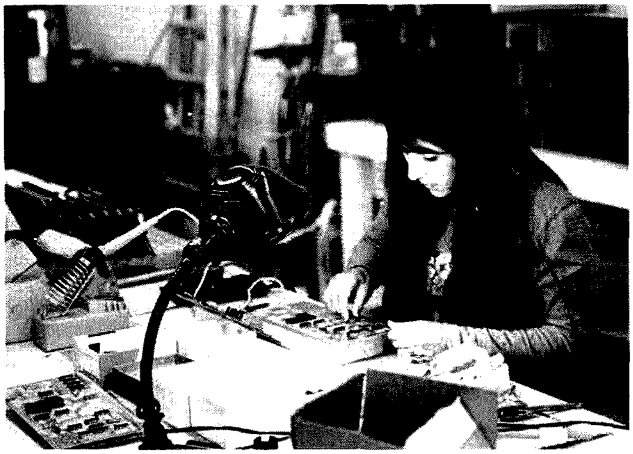

Wiring an Altair board.

memory conveniently as a general purpose scratch data area. With the 8080, there is one accumulator, a stack pointer and six registers which are paired for use as pointer registers. These are often used as if they were general purpose registers, which is handy since the 8080 cannot reference memory addresses directly for most instructions.

What major problems has MITS had? Delivery has been about the only problem, but it has been a big one. At the time they started making deliveries of the 8800 they had 24 people . . . now they have 85 . . . and it takes time to find and integrate new people into a company. No department can handle more than one or at the most two new people at a time and function well, so this severely limits the speed with which a firm can safely grow.

The Altair clicked none too soon. MITS had been heavily dedicated to the calculator field and joined all the others in taking a terrible bath when calculator prices dropped off the end of the dock. The firm lost about $200,000 in 1974 and things looked very bleak by the time the Altair was announced. It was a tremendous gamble for no one knew for sure whether there even was a market for a microcomputer . . . particularly one in kit form. It turned out that there was indeed a market and well over 5000 8800s have been shipped so far . . . about 60% of them kits, and about 50% to hobbyists and 50% to OEMS.

Ed had some glowing things to say about Altair BASIC. The Altair BASIC interpreter was developed jointly by MITS's software wizards Bill Gates, Paul Allen and Monte Davidoff – who are now busily working on an extended BASIC and other packages. (It turns out that most systems software packages such as Altair BASIC are designed by individuals and implemented by at most two or three people as was the case here.) The 8K Altair BASIC, claims Ed, outperforms just about any other BASIC going. A week spent with BASIC and you will be in shape to write some pretty good programs. The nicest thing about BASIC is that there are many programs in print in the innumerable books on this language.

I asked about the possibilities of hobbyists using some of the cast off computer peripherals which are around fairly reasonably from used computer firms. Ed blanched. If a big disk drive is inexpensive you can look for big troubles . . . big expensive troubles . . . then there is the matter of working up an operating system, a detail which could take an enormous amount of time. This might be practical for someone with a lot of experience and all the time in the world. The larger tape drives could back you into the same corner.

Stuff which is RS-232 oriented would be fine, such as line printers, Teletypes and video display units. The chances are that you won't be finding all that many VDTs on the bargain counters. Paper tape readers might be a good deal.

This brought us down to some discussion of larger memories . . . the soon to be released MITS floppy disk system . . . and some other memory storage schemes that are in the works. For instance, there is a new ¼" eight track tape cartridge that may be as fast as a floppy. It will search at 240 inches per second. It will also read and write at this speed, but the inter-record gaps are wasteful and they figure to read and write at 62½ ips since the read and write time is trivial to the search time . . . you search by counting the gaps between records. One cartridge can hold 14 megabytes unformatted and about 8 megabytes formatted.

Games

The discussion got around to computer games and Ed mentioned the lunar landing game wherein you have to try to land on the moon with zero downward speed . . . it took him the best part of a night to get the hang of the very non-linear problem involved. Star Trek is another game which fascinates just about everyone who gets involved with it . . . it is quite sophisticated and intricate. I asked about chess . . . he said he would try to get a copy of the Data General chess game . . . supposed to be the second best computer chess program available . . . but not much of a challenge for any serious intermediate or higher level chess player.

In all it was a most interesting visit . . . I learned a lot . . . and let there be no mistake that I still have a great deal to learn before I will know enough to even read the computer literature and understand it. I would like to let any readers who might be feeling a bit edgy about the more technically oriented articles in *73* know that in time you and I will understand what is going on . . . we may even be able to talk computers with both hardware and software pros.

SWT

The third stop on my microprocessor tour was Southwest Technical Products in San Antonio. Actually this was just a very lucky coincidence, for I went there to see them in regard to their television typewriter unit which is a natural to go with computer systems as well as amateur teletype.

Dan Meyer, the president, and Gary Kay, the chief engineer, spent the day showing me their new

Dan Meyer, President of Southwest Technical Products Company.

6800-based microcomputer system which is due to be released soon in kit form. They had a prototype system set up and working and it certainly was impressive. I asked a lot of questions, trying not to make my abysmal ignorance of microprocessors too evident.

For instance, I asked how come they went with the 6800 chip for their system instead of the several others available.

8080 vs 6800

While I figure it will be quite a while before the proponents of each chip will be cool enough to sit down and work out a comparative evaluation of the situation, this has not stopped me from asking the participants to give me their reasons for going one route or the other.

Gary Kay, the computer engineering brains at Southwest Tech, tried to explain the differences between the two chips to me and why he decided to go with the Motorola 6800. I understood things here and there, aware of a need for a better interface for dealing with people who speak in computerese.

Well, it seems that Gary looked into everything available . . . went to courses provided by the chip manufacturers . . . read a lot . . . and it all came down to the 6800 for him. It was much easier to interface than the 8080 . . . required fewer external parts since much of the work is done by software instead of hardware. This need for fewer parts would seem to be demonstrated by the substantially lower cost of 6800 based units vs. 8080 units (the MITS 6800 based unit is $293 vs. $439 for the 8080 kit).

With the 6800 you can set up any of the 16 lines for input or output and change anytime you want just by programming instructions . . . even in the middle of a program. You can program the system to give any priority for a particular input device. You can do a lot of things with programming that have to be done by switching with the 8080. You can even program whether it will work on a positive or negative strobe (if you are). The handshake line . . . lets it be known when data has been received . . . is all right there on the chip. The 6800 was designed as a system and thus takes less outside equipment to get it working.

Another plus is the Motorola supplied MIKBUG, a small operating system which is available on a ROM chip. This is a nice feature which can be appreciated by 8080 users who find they have to start out by hand switching in about twenty steps before the system will be able to accept programming from tape or cassettes . . . or even a keyboard. Thus, with the 6800 systems you can just flick on the power switch and the initial programming is all done by the built-in read only memory and you find a snowflake blinking at you on your screen indicating the system is ready for use.

This elimination for the necessity of hand switching in the loading program has made it possible to do away with the usual computer front panel and its row of switches and rows of LEDs. Further instructions to the system can be put in by means of a keyboard using octal or hexadecimal notation, whichever has been programmed in by the ROM . . . hexadecimal in the case of MIKBUG.

As time passes we will see whether the 8080 or the 6800 systems have more for the users . . . and that is the bottom line.

The Southwest Tech 6800 kit sells for $450 and includes some handy items. There is

Sumptuous SWTPC front office.

Silk screening front panels for SWTPC kits.

Kit assembly area at SWT.

Parts picking for SWT hi-fi kits.

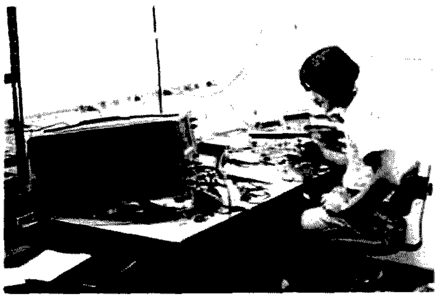

Service area – when the kit builder needs help.

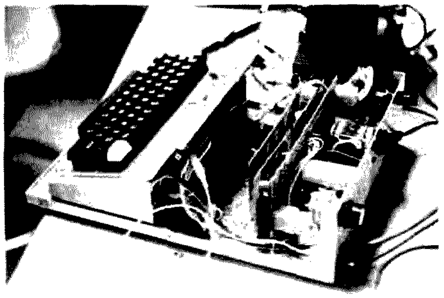

SWT television typewriter . . . being used an an I/O for their new computer kit.

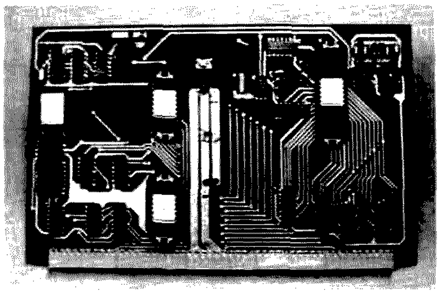

M6800 CPU board, part of the SWT kit.

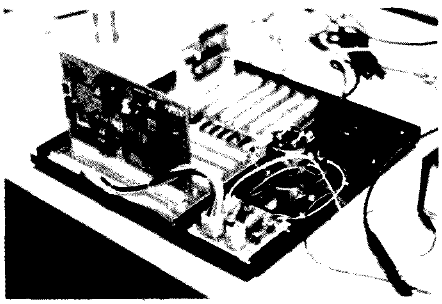

Prototype of the SWT 6800 computer kit.

Gary Kay, the chief engineer of the computer project.

the mother board into which the processor, memory and I/O boards plug, a chassis and cover, power supply, the processor board with the 6800 chip, ROM MIKBUG, 128 bytes of RAM and a clock for the system, and a board with a serial input/output for teletype or RS-232 such as the CT-1204 terminal. A 4K memory board is also included which has 2K on it and space for plugging in 2K more to fill out the 4K . . . the extra 2K is available for only $45. The result is that you have a complete computer system for $450.

In addition to the 6800 kit you'll need to have some sort of I/O device, probably either a teletype with ASCII output or a TV video system such as the CT-1024 kit and a TV set. You'll need more memory for any practical computer operating system . . . certainly the extra 2K and more probably a total of 8K. You will need some sort of bulk memory system such as a cassette recorder and an I/O board which will interface it to the system. Floppy disk systems are nice, but they are still too expensive for most hobby systems and the programs to operate them have yet to be written.

The Southwest Technical operation is a beauty to behold. They are using a Datapoint computer system to run the whole works. The sales are 100% mail order and each order is entered in the computer as it is received. A label and packing slip is printed out for each order and an acknowledgement sent out automatically. Each week all orders are processed by the system and inventory records updated to account for every resistor and part used in the kits. Delivery schedules are in the system too, so when parts in stock get below a quantity which might cause them to run out the computer initiates an order for the parts. Since this system was set up there have been no delays in filling orders due to out of stock parts!

Questions on orders can be quickly resolved by searching the computer memory for the name, zip, or even the ordered kit. Everything is right there at hand.

Dan Meyer, the president of Southwest Tech, took me for a tour of the plant . . . it was enormous. The printing department is bigger than the *73* printery which turns out the many *73* books . . . acres of space filled with shelves of parts, people putting kits together, and more cartons that you would believe. The company has built up a good name in the hi-fi field where it is one of the largest of the kit manufacturers and known for the high quality of their units.

The first excursion into ham territory was with their television typewriter kit . . . a natural for RTTY operators. The CT-1024 terminal system, first made known in a nice article in *Popular Electronics*, consisted of a character generator, sync and timing circuits, cursor, 1024 byte memory . . . all you need to put a 16 line message on the screen of a television set with a video jack on it. The 1024 byte memory is enough for two pages on the screen and the unit automatically switches from one page to the next when the bottom of a page is reached. This kit sells for $175 and is very simple to put together. My twelve year old daughter helped with a good deal of the assembly and soldering of my kit.

A power supply for the unit is available for $15.50 more, as is a keyboard for about $40 and an output interface to feed ASCII to your RTTY system or to a computer ($40). Thus, for about $275 you have a complete system, requiring only an old black and white TV set for a display and an RTTY system geared to ASCII input (RS-232). Compared to today's teletype machine prices, that has to be one of the best bargains going. Compared to commercial video display keyboards it also was an outstanding buy.

The SWTPC 6800 computer kit looks like a winner, too. Priced at $450, it includes a 714 page applications manual, the 6800 chip, the MIKBUG ROM operating system, a serial interface which will operate a 20 mA teletype or work with their TV typewriter system. ■

Gary L. Feldman WN2UGO
28 Pine Tree Dr.
Poughkeepsie NY 12603

Night DXing on 10 and 15

Talk about a rat race. If the 40 and 80 meter bands aren't a rat race after 9 PM, then what is? If you're like me, tired of foreign AM broadcasts on 40, or 80 with its 50 kHz of pileups, read on. The closest comparison to 80 at night is a Martian ham station calling CQ DX on 20 on a Saturday morning, only more so.

Getting back to 10 and 15 night DXing: It isn't really DX, but it has all of its rewards. It sounds like DX, is just as thrilling (for me anyway) and boy it's a big band or two and nice and quiet. Talk about QRM free, here it is.

Working a fellow novice, or anyone who happens to be "slumming" on 10 or 15 at night is just great. There's the QSB of DX as the ground waves fades. There's that low lonely signal to pull out of the mud; who cares if he's only 50 miles away? It's just as hard, if not harder than any DX you ever work. And I mean pulling him out of the mud, for he's as subterranean as you can get. But that's where the thrills come in. The accomplishment of the above feat is equal to working any DX. He sounds like he's in Asia, so who cares if he's fifty miles away?

I've been a Novice for about nine months now, and have worked my share of DX. For the most part, when it's in, it's in, but when it's out, forget it. There's rarely any sweat working G's, I's, ON's, etc. when they're 469 or so. Compare these sigs to the guy 229 fifty miles away and you're getting the idea.

Living within Metropolitan New York City, I'm sure that more than a few hams can CQ on 10 or 15 at 10 PM nightly. Just think, a total of 200 kHz of quiet to work with.

I guess for the most part a great many Novices tune 10 and 15 for a few minutes at night, they hear nothing, and go to war on 80. However, I'm almost certain that if a bunch of Novices start calling CQ on that virtually dead band, something will start.

By the way, I've listened to 15 meters from 9-11 PM EST at times, and lo and behold out of nowhere, on a seemingly dead band, "CQ CQ CQ DE ZL1A ..." So, my fellow hams, if you've got those PM blues like me, let's get with it. Anyone within 100 miles of my QTH drop me a line and we'll try and sked. All you others try some 10 and 15 meter Nocturnal DX. You'll be just as excited as when working a real one. If not, there's always girls. ■

propagation

by
J. H. Nelson

EASTERN UNITED STATES TO:

GMT:	00	02	04	06	08	10	12	14	16	18	20	22
ALASKA	14	7	7	3	3	3	3	3	7	7A	14	14
ARGENTINA	14	7B	7B	7	7	7	14	14	14	14	14A	14A
AUSTRALIA	14	7B	7B	7B	7B	7	3A	7	7A	14	14	14
CANAL ZONE	14	7	7	7	7	7	7	14	14A	21	14	14
ENGLAND	7	3	3	3	7	7	7	14	14	14	7A	7
HAWAII	14	7B	7	7	7	7	3A	3A	7B	14	14A	14A
INDIA	7	7	7B	3B	3B	3B	7B	14	7A	7B	7B	7
JAPAN	14	7B	7B	3B	3B	3	3	7	7	7B	7B	14
MEXICO	14	7	7	7	7	7	7	14	14	14A	14	14
PHILIPPINES	14	7B	7B	3B	3B	3B	3A	7	7	7B	7B	7B
PUERTO RICO	7	7	7	7	3	3	7A	14	14	14	14	14
SOUTH AFRICA	7	7	7	7	7B	7B	14	14A	21	21	14	14
U. S. S. R.	7	7	3	3	7	7	7B	14	14	7B	7B	7
WEST COAST	14	7	7	7	7	7	7	7A	14	14	14A	14

CENTRAL UNITED STATES TO:

ALASKA	14	7A	7	3	3	3	3	3	7	14	14	14
ARGENTINA	14	7B	7B	7	7	7	7	14	14	14	14A	14A
AUSTRALIA	21	14	7B	7B	7B	7	7	7	7	7A	14	14
CANAL ZONE	14	7	7	7	7	7	7	14	14A	21	14A	14
ENGLAND	7	3	3	3	3A	3	7	7A	14	14	7B	7B
HAWAII	21	14	7	7	7	7	7	3A	7	14	14A	21
INDIA	7	7	7B	3B	3B	3B	3B	7A	7A	7	7B	7B
JAPAN	14	7A	7B	3B	3	3	3	3	7	7B	7B	14
MEXICO	14	7	7	3	3A	3	3	7	14	14	14	14
PHILIPPINES	14	14	7B	3B	3B	3B	3	3	7	7	7B	7B
PUERTO RICO	14	7	7	7	7	7	7	14	14	14A	14	14
SOUTH AFRICA	14	7	7	7	7B	7B	7B	14	14A	14A	14	14
U. S. S. R.	3	3	3	3	3	3	3B	14	14	7B	7B	7

WESTERN UNITED STATES TO:

ALASKA	14	7A	7	3	3	3	3	3	7	7A	14	14
ARGENTINA	14A	14	7B	7B	7	7	3B	7B	14	14	14A	14A
AUSTRALIA	21	21	14	7B	7	7	7	3B	7	7A	14	14
CANAL ZONE	14	14	7	7	7	7	7	7	14	21	14A	14
ENGLAND	7	3	3	3	3	3	3	7	14	14	7B	7B
HAWAII	21	14A	14	7	7	7	7	3A	7	14	21	21
INDIA	7B	14	7B	3B	3B	3B	3B	3A	7	7	7	7
JAPAN	14	14	7B	7B	3	3	3	3	7	7	7B	14
MEXICO	14	7A	7	7	7	3	3	7	14	14	14A	14
PHILIPPINES	14A	14	7A	7B	3B	7B	7B	3	7	7	7B	14
PUERTO RICO	14	7	7	7	7	7	7	14	14	14A	14A	14
SOUTH AFRICA	7A	7	7	7	7B	7B	3B	7B	14A	14A	14	14
U. S. S. R.	7	3	3	3	3	3	3	7A	7A	7	7B	7B
EAST COAST	14	7	7	7	7	7	7	7A	14	14	14A	14

Open = Good ○ = Poor □ = Fair

1976			FEBRUARY			1976
SUN	MON	TUE	WED	THU	FRI	SAT
1	2	3	4	5	6	7
8	9	10	11	12	13	14
15	16	17	18	19	20	21
22	23	24	25	26	27	28
29			FIRST QUARTER	FULL MOON	LAST QUARTER	NEW MOON

A = Next higher frequency may be useful also. B = Difficult circuit this period.

Jon Wennerberg WA8GDW
736 Pine
Hancock MI 49930

60 Hurts Per Second

I sometimes wonder about the history of hams — everybody knows that amateurs have been responsible for technical advances in radio. But I can't put this into perspective when I think of my own work. Like the first project I ever built. It was a 30-watt peanut whistle from the Handbook. I thought I was doing something just barely removed from basic research — at least until I got to the parts supply house.

The guy behind the counter had the gall to tell me that the 5U4 could be replaced by this new tube — it was a 5AR4 — and it was smaller, more efficient, and cheaper, too! So I dropped my self-esteem a tiny bit and took it home to start work. My high school radio club advisor suggested I scrap it for a few silicon diodes. Well, he was a physics teacher, and everybody knows that they know all about these modern techniques. I used the tube — but I started to play with them "solid state" devices that were suddenly everywhere in radio.

I was pretty sure of how to use silicon and the old-fashioned seleniums when I took that junior college course called "Tubes and Transistors 109." I signed up thinking that we would be used as consultants to the guys at RCA when they needed some help. But that course ... I showed up for lectures that sounded more like a karate demonstration in a Greek restaurant. Imagine walking into a room and hearing "Hfe Hie Beta Fco Alpha." What the heck was he talking about?

I got through the course. I can't say that I got an A, but I was finally up on the latest. So there I was — I knew the latest terminology from the industry and could do real up-to-date work. So who asked for help from ARRL-FCC? Why couldn't they leave well enough alone? HERTZ, indeed! No offence, Heinrich, but I still say cycles per second. At least until I get my fingers across the a.c. line, at which time I get 60 hurts per second.

So our hero (that's me, ace wizard-experimenter-researcher) strives to help the world move ahead by applying this wonderful knowledge of up-to-date electronics. I was thinking of something along the line of miniaturization. I stopped at the familiar

parts house to get some reference works ... and saw books about the new integrated circuits. One fellow must have thought like me, though. His electronic device was dubbed the ICKEY. My feeling, exactly.

I was not stopped by the move to "small," though. Even though my head was turned by stone-crushers running 3-phase 208 through the primaries more than it was by those tiny transceivers Al Kahn was making, I thought about trying QRP. I did, and it worked fairly well. I used a borrowed HW-7 and made one contact on 40. He was about 4 miles away, and still insists that he did hear me that day. We used 2m FM for liaison. The antenna, of course, wasn't the best — hookup wire wrapped around the copper heating pipe for about twenty feet before it led outside where it paralleled the gutter. But I had heard that these little rigs didn't need much of an antenna, and anyway, I was using a transmatch. I could set the thing, though, since my SWR bridge would work with that ridiculously small amount of power, but I did arrange the taps so that they looked pretty, and that should have been enough...

QRP having proved nothing, I went back to my plans for giving RF burns to all within miles of the main lobe. I went through my usual process of modernization, going from the old glass 4-400A to a couple of 4X150's to the ceramic 4CX250A to the ultimate — a 4CX1000A with only about 15,000 hours on it. The engineer from the local FM station said it had been taken out of service as regular maintenance — not for any defects in operation, although it wasn't quite as perky as when it was new. After scraping the corrosion and smoke from the tube I settled down to build. I even secured that one thing that *NO* high-power rig can go without — a forty horsepower wind generator from Hollywood. I figured that would provide my state of the art amplifier with sufficient cooling air to take care of all possible eventualities.

Apologies for the little break, but I just got the mail, and I took a break to read the ham magazine that came. I see a high-power amplifier is shown inside. That just might be what I needed — a chance to compare notes with the author, and maybe give him a hand with design modification. Funny looking circuit, though. I don't see the fan to cool the final. Hey! What's CONDUCTION COOLING? ■

Catch Big Ones - Fishpole Mobile

by
Joe Rice W4RHZ
916 Western Ave
Covington KY 41011

After investigating the available "store-bought" mobile antennas and looking at their prices, I came away more than chagrined. Not only were the prices high, but equally important the swr was poor, indicating a sort of compromise in design.

I decided to build my own. Having already done reasonable experimenting on other bands, I decided I would like to try mobile CW on 20. On lower bands, such as 80 and 40 and even on 160, the efficiency of mobile antennas falls off sharply. 80 meters still had an appeal for me but I decided 20 was better because of the skip conditions. Incidentally the whole rig was built using an old 1625 tube driven by two type 6F6s as buffer and driver. The vfo was home built using three transistors operating on 40 meters and mounted in the front of the car.

As no one has really resolved whether center loading or base loading is the best, I decided to use a little of both. The general philosophy was to make the center loading less than optimum and augment this with the correct amount of inductance in the base to bring the system into resonance.

Bamboo is hard to obtain these days, for some reason, but I did find a three-section fishing pole at the nearest hardware store which was small in diameter and had a lot of give to it. I decided to use the old-fashioned beehive standoff insulators to hold the antenna away from the car body. I had some compunction in using the ceramic as I first thought it was far too fragile for mobile use. It has proven to be very durable. I even whacked a few tree limbs on purpose at a reasonable speed of 30 mph with no ill effects.

The fishing pole comes in three sections, each fitted with a brass fitting so as to telescope into the mating section. I only used two sections making an overall height of 8 feet. To obtain greater efficiency, I wrapped number 16 wire around the bottom section to get the inductance up. The center coil was mounted on two aluminum clamps bolted around the bamboo. I used a soldering lug in order to solder the coil directly to the pole. The top section of bamboo has another piece of number 16 stretched to the top with just a gentle curl around the pole. This is done so that the wire will not break if you should hit a tree limb. If the wire was stretched out straight, it would bend in such a manner as to break.

When I first grid-dipped the whole affair it dipped in the 27 MHz band! It would seem that the grid dip meter only sees the overall height of the antenna, sans any coil at all. Another dip was found nearer the 14 MHz region.

The insulators were mounted using self-tapping steel screws and a piece of cork gasket material between the car body and the insulator to take up the shock. I put varnish around the whole thing later to keep moisture out.

The photo and diagram tell the whole tale. What is not shown is the feed system. I tried every system in the mobile handbook to no avail. In desperation I used a piece of coax cut to the right length so as to look like a quarter-wave transformer. Like most amateur radio operators I do not have the facilities to measure the radiation resistance presented at the base of an antenna. An educated guess told me it was in the general neighborhood of about 20 Ohms. Using a piece of RG 58U cut to a length of 10½ feet, it yielded an swr of about 2:1. Anyway, it works! Since the center loading coil is mounted on the top section, I can easily change it to operate on each band. The entire 12 foot, 3-section pole only costs $1.39 and is apparently tougher than any man-made material. ■

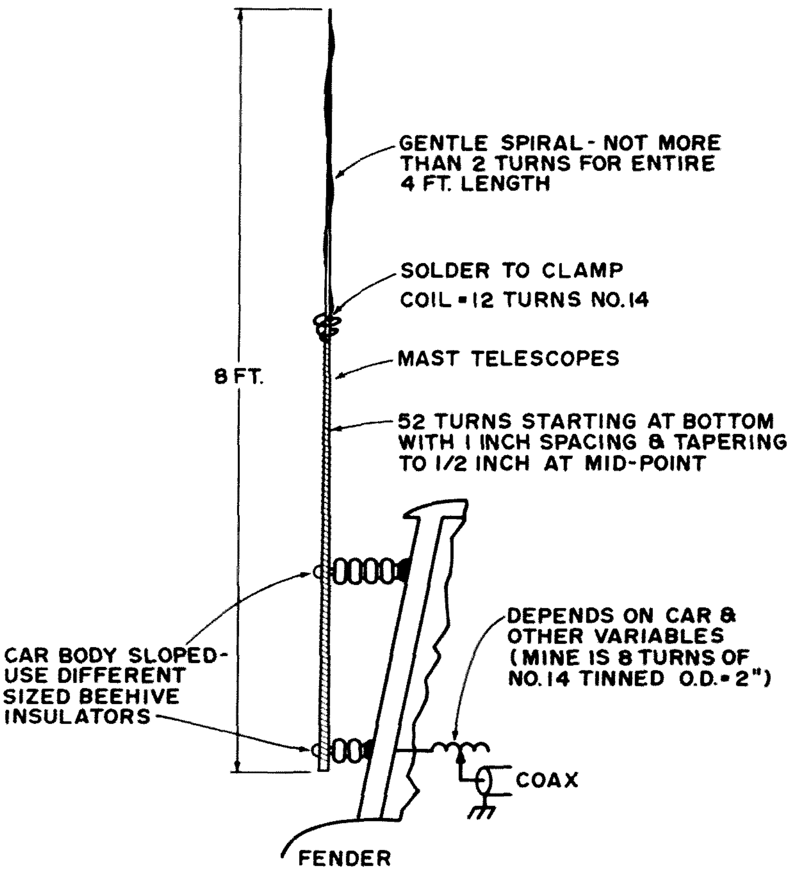

Glitchgate

by
George M. Ewing WA8WTE
510 Sheridan Drive
Sault Ste. Marie MI 49783

We had been out at John Gregory's house for several hours, working on an old Russian samovar that his mother had brought back from the Turkish highlands near Adana while on a DXpedition in the Middle East. We couldn't seem to keep the charcoal lighted and were thinking of forgetting the tea and using the silver hot water tank for a coaxial tank filter for the backup receiver on VE3SSM. Suddenly we realized that it was after eleven, and that there was no beer in the house. It was definitely time for a break anyway, so John and I fired up Supertruck and trundled on down to the Antlers Bar & Grill.

When we got there, our usual seat under the Chippewa war canoe had been taken by some boisterous hockey fans, so we settled for a corner table between the stuffed boa constrictor with the snowmobile helmet and the Eire flag. The snake is a regular patron of the Antlers, and on St. Patrick's Day has been known to slither down the bar and drink green beer from the customers' glasses if they aren't too alert to snatch them away.

At any rate, after John and I had ordered our Paul Bunyan Burgers and drafts, we resumed a previous discussion, something about Middle East Politics and Long Delay Echoes. Some of the people from Harvey's basement came in, swiped some chairs from the table on the left of the stuffed moose's ass, and joined the group. This perforce changed the thrust of the discussion to such technical niceties as the superiority of non-volatile ferroelectric memories over ECL and the advantages of sapphire as a substrate material.

Frank Ostrander and some of his FAA buddies came in, and took the other adjacent table, under the steam whistles. Frank's a ham, but he's not into semiconductors much, so the conversation gradually shifted to weather and flying stories.

John Gregory started us off by telling the one about Dick White, a VHF nut and pilot who had been stationed at Kincheloe Air Force Base. Dick had been flying a mission out over Lake Superior one spring evening when he got a U.F.O. from the boys at the 753rd AC&W radar station, and was ordered to investigate. When he arrived at the target area, he reported that he saw a 213m (700') long spaceship with rows of lights along its sides. He was tracking the thing so intently that he forgot his instruments, followed the image through a temperature inversion, and found himself in a screaming Kamikaze dive at the Wilfred Sykes, a lake freighter on Whitefish Bay. He pulled out in time, and after an embarrassing hour's debriefing, went home, fired up the 432 rig, and got three more states and Manitoba before the opening died.

He was tracking the thing so intently that he forgot his instruments and found himself in a screaming Kamikaze dive . . .

Drawing by Neal Kandel

Bill Rennamaki and Mike Daniels came in about then and joined the group. They swiped two more chairs from over by the Fokker Triplane propeller with a stuffed dog on it, and ordered another round. Mike's a radio astronomer for NASA out at North Liberty IA, and told several solar flare and LDE jokes.

John Michael retaliated with another U.F.O. story, this time about one that WE launched. This particular one had been 30m (100') plastic film hot air balloon supported by a peanut butter pail full of burning gasoline. It had been a real beauty, with tuned radar reflectors, strobe lights, and a scrounge TACAN transponder on it to confuse the Air Force. John Michael had burned his fingers lighting the gas, and henceforth claimed that he was one of the few verifiable U.F.O. casualties.

After a few more flying stories and a halfway serious proposal for a high altitude balloon repeater for emergency coverage during disaster that was shouted down, at least for the U.S. side of the river because of licensing problems, we saw an old friend come in: Frankie Leitenen, the tool and parts king of the Northern Michigan hamfest flea markets. Frankie had started to take a

table 'way in the back, under the nude autographed portrait of the 1948 Detroit Red Wings in Toivo Crimin's Sauna Bath. We hollered and motioned, and finally he sauntered over, dictating his hamburg order over his shoulder to the waitress.

Everybody was glad to see Frankie. He hadn't been around the Antlers for a couple of years, or at a hamfest for longer than that. We'd missed him, too. He'd always had the best deals on tools, tubes and small components at all the swapshops. I'd bought stuff from him from time to time: an obsolete tube, a roll of Teflon tape, or a handful of ICs that I needed for the latest project. You just couldn't beat his prices, and at least at first, he had always been willing to take your junk in trade, even some pretty unlikely stuff. We had always wondered where he'd gotten all that junk, and when he sort of disappeared, there had been a good deal of speculation that he'd gotten in trouble with the military for scrounging too handily at surplus disposal depots, or been the subject of an IRS witch hunt.

He seemed cheerful enough now, though, and if he'd had a run in with the Mafia or Uncle Sam it hadn't left any outward scars. He did seem to be looking over his shoulder a lot, though. As soon as Trixie, the waitress, had brought his Paul Bunyan and tied the bib with the shamrocks on it around his neck, he was bombarded with questions. He was non-committal at first, but then the question was put more bluntly:

"Why the hell aren't you at the swap-and-shops any more, Frankie, you been in jail or something?"

He made the old familiar empty pockets gesture, from the horse-trading days, and said something to the effect that he'd love to buy a couple of pitchers of beer for the gang and tell us all about it, but that he had payments to make on his new triggered-sweep scope. Also, he was low on beer money and, anyway, we'd scoff and wouldn't believe him.

Well, this was a pretty obvious come-on, but I reckoned that a good story was worth the price of a couple of 807s. Several others agreed. A small but impressive pile of bills and change appeared on the table, and we were giving Trixie our orders when some fool hockey fan down by the Samurai swords ordered a steak.

Perhaps I'd better insert a parenthetical note at this point. All the gongs whistles, bagpipes, air raid sirens and other junk on the walls of the Antlers are functional, and *loud* to boot. When a steak order comes in from the teletype terminal by the meat case, two or three demented bartenders run up and down the bar, pushing buttons, stomping pedals and swinging bung-starters. All hell breaks loose.

When one of my buddies was back in the world from Tay Ninh a couple of years ago, he heard the steak siren for the first time in over a year. He dropped his beer on the floor, made a running dive hollering "INCOMING!" at the top of his lungs, and slithered around under the tables, looking for a bunker.

After the brouhaha had died down, and the steam from the whistles had cleared out so that you could see, Frankie continued as if nothing had happened.

"As I was saying, it all began soon after I bought that old yellow farmhouse out on the Pickford Road. The old couple that lived there thought that the place was haunted, or something, and I got it at a really bargain price. I tried to get some information from them before they piled into their camper and scrammed for Florida, but all I got was a few incoherent mutterings from the wife about 'varmits' and 'toady-frogs.' I moved

Mike interrupted, asking what the glitches were supposed to look like. I told him they were long-nosed, pointy-eared creatures . . .

Frankie went on, describing the battle he had reeling in the recalcitrant little beastie, as big a fish story as any steelhead angler ever told . . .

in the same day, set the workbench up and strung up some antennas."

There was an interruption for a couple of minutes. Somebody at the next table had left a silver dollar as a tip for Trixie and it had disappeared before he had even left the table. He stalked angrily around the room, peering under tables and chairs. His buddy tried to console him, telling him that it wasn't really silver anyway, only an Eisenhower slug. But he was still angry when he finally walked out.

Frankie continued, "I spent the next few days sorting my junk, which didn't really amount to a lot in those days. I kept my eyes peeled for the varmits the old lady had mentioned, but without success. I did glimpse something scurrying around out of the corner of my eye a couple of times.

"After a while though, things started to disappear: small tools, hardware, transistors, that sort of thing. At first, I thought I was just being careless, but one night an expensive UHF power transistor vanished from the middle of a perfectly clean bench. I spent about an hour going over the floor, table, the works with a Tensor lamp and a magnifying glass – nothing.

"I took a few minutes break, and got a Coke out of the cooler upstairs. When I returned, the transistor was still gone, but there were several lockwashers and an unmarked TO-5 case with six leads lying on the same spot on the bench."

"Packrats," said somebody at the next table.

"No, gentlemen," said Frank. "I had been convinced that I was dealing with glitches."

Well, this got a good laugh, and several members of the group, taking this to be the punch line of Frankie's story, started to tell about *their* adventures with the glitches. Frankie was far from finished, however, and he tore into the scoffers with an almost missionary zeal. I was skeptical, of course, but not so much as you might think. I had mislaid tools and parts over the years, sometimes returning to find them in plain sight, sometimes not. Then there was the scissors hole at Gregory's house. Over the years, dozens of scissors, tinsnips and wire cutters had disappeared. Only a few of them had turned up, and those had been badly corroded.

Mike interrupted, asking what the glitches were supposed to look like. I told him that they were undoubtedly descendants of the original World War 2 gremlins, and were, therefore, long-nosed, pointy-eared creatures, like the AMC emblem or a cartoon Martian.

Frankie was downright contemptuous. He said that showed how much we knew about glitches, namely zilch. Ostrander, scribbling notes on his placemat, motioned Trixie to bring a couple more pitchers. An Air Force colonel had come in and was listening to the proceedings with a bemused grin. Two strangers with overcoats had followed him in. They were sipping beer under a picture of John Philip Sousa directing the 1924 Sault High School Marching Band.

Frankie continued. "You guys can laugh all you want, but I've seen them, and I have proof that they exist. Once I realized what I was up against, it was only a matter of time before I had a real, tangible glitch. The first thing I did was set up a Polaroid camera and a photocell focused on the spot on the bench. I left some shiny hardware and a handful of 2N706s on the table as bait. Over the next few days, I used up several packs of film, but with disappointing results; they were too fast. Even with 2000 speed film and a one millisecond flash, the pictures were blurry, but there was definitely something there."

Frankie went on, ignoring the hooh-hahs and jeers arising from the last. "I got a few pictures, showing a long, lizard-shaped thing, but nothing that would serve as proof. I lulled their sense of security for a while, feeding them copious amounts of hardware and shorted diodes and zip-tops. Once in a while I'd get something in return. After a while, they hardly paid any attention to me. I discovered that they weren't running across the bench, as I had first imagined, but rather were materializing and vanishing again, all within a meter or so of the center of the workbench. They were completely silent, never making a bang of displaced air, or any of the funny noises that are supposed to accompany poltergeists or supernatural creatures. Finally, I decided to set a trap for them.

"I took a particularly shiny IC case and put a few drops of Eastman 910 on it and bonded on the eyelet from a fishhook. I got a fancy spinning reel, and wound about 91m (100 yards) of Corbollon macromolecule filament, with hundreds of pounds of tensile strength, and nearly invisible. I bonded some scraps of ruby rod from a busted laser onto the reel bail as bearings. Then I hooked up an alarm, sat back and waited.

"I didn't have to wait very long before the alarm rang. The IC vanished, trailing line from a screaming reel. I half expected the line to be bitten off, or to be cut by the edge of the hole, or gate, or discontinuity, or whatever, but it wasn't. I had caught myself a real live glitch; now all I had to do was reel him in."

The colonel had pulled his chair up as close as he could. I recognized him now, an operations officer from Kincheloe. He was

listening intently, every bit as hooked as Frankie's glitch. The Overcoat Boys were squinting their ears so hard they were nearly falling out of their chairs.

Frankie went on, describing the battle he had reeling in the recalcitrant little beastie, as big a fish story as any steelhead angler ever told.

"I finally had him back through the gate and held him down on the bench top. He (I discovered later that he was an adult male) flopped and wiggled a bit, and then calmed down. Pretty soon I could hold him in my hands. He was about 32.8cm (1') long, shaped like a Gila monster or salamander, and surprisingly heavy, like he was made of metal. He was a mottled brown and olive color, with a red place on his throat which he puffed out at me. The IC case was firmly glued to his lower jaw."

There was another interruption for a steak alarm, this time with a couple of blasts on a hockey fan's Freon air horn, and a couple of gunshots, which sent the strangers in the trench coats scurrying for cover behind the meat case in the corner. One of the bleary-eyed snowmobilers started out singing a verse of the engineer's song. A couple of the guys in our group started to join in, but they were promptly shushed. The rest of us were interested in the story and it was getting dangerously close to closing time. I didn't want to get stuck with a cliff-hanger.

"From there on," Frankie continued, "it was easy. I caught several more of the little buggers in roughly the same way and eventually trained them to retrieve more tools and parts than they stole. Some of it was pretty weird, but enough of it was salable to make a handsome second income for several years. I fitted 'em out with little stainless steel collars, like cormorants. That way, they couldn't swallow anything big, and had to live on the lockwashers and little stuff I fed 'em. I even sent through a Minox camera on one of the collars. Most of the time I didn't get very good pictures, same trouble as before, only the other way around. I did get some wild pictures, though, and this was the beginning of the end of an otherwise sweet setup. I began to get frightened. Remember the Russian transistors?"

Several of us nodded. Frankie had had quite a deal on some "surplus" Soviet computer boards and components.

"Well, that wasn't the half of it. Some of the pictures I got back just had to be secret government stuff, and some of it was just plain ridiculous. It didn't even look like it was made by *humans* if you follow me. Finally Athelstan, he was the one I caught first, you know, brought back this. And right then, ladies and gents, was when I got out of the trained glitch business, and went on a nice, long vacation. If you study it, you'll see why."

With that, he tossed the gadget he'd been holding onto the table, chugged the last of his beer and made for the door. The two guys in the coats got up and followed him out. I picked up the thing and looked at it. It was a kind of key, like those fancy ones that they use in the pick-proof locks on vending machines, only a lot more complicated. It had a nylon cord, like a neck loop, and was covered with serial numbers. It gave the impression that if you asked NASA, or IBM, or somebody to come up with an absolutely foolproof lock and key, cost no object, that this would be it. Oh yes, there was a name in front of one of the numbers: "Sandia Corp."

Right about then I noticed a weird, gargling sound, as if somebody down the bar was trying to strangle a Springer Spaniel and not quite succeeding. It was coming from that SAC colonel. He was turning purple in the face and looked like he was starting on a real conniption fidget. He gasped and motioned to me for the key. I flipped it toward him, but it sort of bounced on the table between us, and just kinda, well, winked out!

He looked kind of befuddled for a second, then got up, sort of shaky-like, and ran over to the phone booth in the other corner. It didn't do him much good, of course, because there's no phone in the Antlers phone booth, just an obscene parrot. Not only that, but the parrot is stuffed, as is cousin Suomi on the third stool down from the snake.

The colonel came to his wits, finally, and ran outside to his car phone. In a few minutes, the place was full of Air Police, the FBI, the CIA and the Mounties, as if they had all come down a rope. They gave us all a hard time, keeping us in the place for an hour after closing for questioning, but they never found the key. They really went over the building, too, with metal detectors, and magnetometers. They looked behind every brick and under every floorboard, but to no avail. I think they're still keeping a pretty close watch on all of us regular customers. My telephone sounds like the click room at a relay factory when I pick up the receiver, and my third grade teacher has been interviewed by six different agencies, and offered two bribes.

We never saw anything more of Frankie or the coatmen, but once in a while, when I'm finishing a beer just before last call at the Antlers, I catch a flicker of motion out of the corner of my eye. I like to think that Athelstan and his friends have found a new home. ■

In a few minutes, the place was full of Air Police, the FBI, the CIA and the Mounties, as if they had all come down a rope . . .

Switch It Off First

John H. Smith VK3IQ
83 Bindi Street
Glenroy 3046
Australia

One of Murphy's Laws must be "He who fiddles with radio is going to get electric shocks." I can't tell how many shocks I have had, and almost every active amateur must have had at least one bad shock sometime. Despite the fact that most amateurs have high voltage power supplies, the greatest number of electric shocks come from the ac power mains. I know that most of mine have been ac, and when I asked my friends about their shocks, they agreed with me. The start of this train of thought about electric shock was the 264 volt wallop that I collected from my son's 24 volt electric train set, but more of that later.

One of the greatest dangers of electric shock is its unexpectedness. One minute you are quietly working on the rig and then "Wham," you get a terrific jolt down the arms and chest, and if you are lucky, you yell like mad and curse a bit. "Damn thing bit me," you say, amongst other things. Of course, if you are unlucky, you don't say anything, anymore, and QST has another entry for its "Silent Keys" column.

Most electric shocks come through sheer carelessness. Ac switches placed at the bottom of a chassis are a good way to collect a jolt through the fingers. If you must place switches there, protect yourself from the terminals by wrapping the switch in a small plastic bag or covering the terminals with electrical insulating tape. Transformer terminals should also be covered with a strip of tape. If you must work on equipment that is live to a hundred volts or more, wear rubber gloves. I have saved myself many a shock by this simple method.

Over the years I have had several severe shocks, mostly through my own carelessness. The most severe shock I ever had was due to neglecting the first rule of safety: "Switch it off first." I had been appointed Radio Operator on a one time U.S. Victory ship, the ex "Norway Victory." She had an RCA 4U Radio Console, where the main transmit-

ter B+ of 1500 volts was supplied by a motor generator. The B+ was fed to the transmitter through a long fuse, mounted by the generator starter panel under the console desk. The fault was quite simple, no B+. The fuse, a long brown bakelised paper tube with brass end caps, was probably blown, so without turning the motor off, I grabbed it. It grabbed me too, all 1500 volts of it, and I got an almighty shock which caused me to leap back, cracking my head on the underside of the desk as I shot past. When I had recovered and turned the motor off, I found that some previous genius had also had fuse trouble, but no spare fuses. He had solved his trouble by repairing the fuse; unfortunately for me he had soldered the fuse wire from brass cap to brass cap OUTSIDE the tube. The fuse was indeed blown, but I had made contact with the part of the fuse wire that was still connected to the B+. Naturally, I cursed the fool who had done this, but in truth I was the fool for trying to change fuses in a 1500 volt line with the power on.

Of late, after eleven years ashore, I have become more safety conscious. I have had an amateur station for ten years, but have not had many shocks from it. The first shock I received when pulling the transmitter panel and chassis from its case. The ac switch is at the bottom corner of the front panel, and to ease the chassis from the cabinet I slid my fingers under the panel. Yeeowww! I have now taped the switch terminals, but for greater safety, all the ac power cords are only long enough to mate with their respective power sockets when each piece of equipment is in its case. To remove any unit in the station, it must first be unplugged. If I need to work on a unit out of its case, it must be deliberately patched with a power extension cord. Another safety feature is that all equipment is encased, and the cases are connected together and to ground. In addition, the station ground system is entirely separate from the waterpipe ground of the house electricity supply. This completely separate ground is a great help in avoiding TVI caused by rectification in electricity supply grounds, which may be fine for ac but are ineffective at rf. In addition, the ac line to the rig is only grounded to the station ground.

As an aid to electrical

safety, our local supply authority requires that all power sockets be of the three pin type, with the third pin grounded. All appliances with a metal case must be connected by 3 core flex and three pin plug. Thus, any appliance that develops a short to case will blow the house fuses and protect the user against shock. Every appliance in my house has been checked for safety and found to be in order. All cords were tidy and properly connected, switches were in the active line where only a single pole switch was used, and I was rather proud of my nice safe house. Pride comes before a fall they say.

A couple of years ago, my son was given an electric train set. It was secondhand, but apparently in good order. It uses the all ac German "Marklin" system, using a third rail of studs between the tracks to provide 16 volts ac for the locomotives, plus a 24 volt ac pulse for operating the locomotive reversing switches. I checked that the transformer case was grounded, and that the 16 and 24 volt supplies were the correct value. What I did not check was that the rails were grounded; I merely checked the voltages from center studs to track. The system worked well and it was regularly used indoors. One day recently my son decided that he wanted to use the train set outside in the garden. The track board was placed on the grass, the transformer connected to the track, and the 240 volt mains connected to the transformer, with an extension cord. As I put the locomotive on the track I received an almighty belt that knocked me off balance. I yelled "Turn it off!" and then sat down to recover. I had no doubt that I had received a full mains shock, but how? It was a safe low voltage train and I had checked it. As I thought about it, I realised that I had been between track and ground as I put the loco on the lines, so I put a voltmeter between track and ground and switched on. The reason for the shock was clear — 264 volts! Again, how come?

After disconnecting everything — boy, was I careful now — I examined the transformer. What I found in the box was not a low voltage transformer at all, but a very old radio transformer which some genius had worked out as a cheap replacement for the original. His wiring certainly provided the voltages required, but by

autotransformer action he had left the track live at 264 volts to ground. By feeding 240 volts into a 210 volt tapping he had increased the 5 volts plus the 2 x 2.5 volt winding outputs to 16 volts, but what a death trap!

Before you have your next QSO, have a look at your house. Is everything electrically safe? If not, fix it fast or call an electrician. Have a look at the rig. Are the cases grounded? Are the cases on a good separate ground? Are there exposed B+ or ac terminals? Can you get across transformer or switch terminals while working on the rig? Think, for a minute, of your family, of your insurance company. ■

John Skubick K8ANG
1040 Meadowbrook
Warren OH 44484

Improving the FT-101

Do you feel that your earlier FT-101 could use "just a bit more" receiving selectivity on single sideband? How would you like to accomplish this at a reasonable cost, simply, quickly, and *without* butchering up your pride and joy?

I already had the FT-101 "160 meter model," so I could not see paying the couple of hundred dollars difference to trade for the "B" model. A closer scrutiny of the Yaesu price sheet revealed a "XF-32A, 8-pole, SSB Filter for FT-101B, for $49.00." Now what was that all about? The FT-101 *B* already *has* an 8-pole filter! Yaesu Musen in California explained that this filter is used to upgrade the earlier models of FT-101. They also told me that this filter will not affect the operation of the earlier models, except to give them more receive selectivity and to narrow the speech bandpass when transmitting. They also told me that this filter will *not* change the interstage drive requirements, *nor will there be any retuning of any kind,* within the rig. Well, this is right up my alley!

Splurging and Installing

I sent Yaesu Musen USA, Inc., the money and

received the filter in one week.

This filter is installed in place of the present 6-pole unit, model XF-30A, designated as XF-1 on the schematic. This is on the I.F. UNIT, plugin (held in by screws) circuit board, which is easily accessible, from the top of the rig. The A.F. UNIT has to be removed first, which is also a plugin circuit board, before you can remove the I.F. UNIT board.

Using a little care and working slowly, the time required from unplugging the boards, switching the filters, to replacing the boards can take less than an hour. Don't forget to remove the old filter's two hold-down nuts and lock-washers, prior to unsoldering! The greatest time is spent at unsoldering, and at the same time, working the old filter out of the I.F. UNIT board. Take your time here. When the old filter is finally removed, carefully clean out the filter's printed circuit connections' holes and your new filter will literally drop right in.

Holding the new filter in place, replace the hold-down nuts and lock-washers. Solder the connections. Plug the I.F. UNIT and A.F. UNIT boards back into the transceiver, fasten the holding-screws, and fire up!

Results

The first thing I noticed was the sharper tuning on SSB. With the old filter, the signals used to "plop right in" as I tuned across the phone portions of the bands. Now, I have to tune a bit slower. One quickly gets used to this. The new filter reduces and practically eliminates "monkey chatter" and "growls" caused by adjacent signals. The eight-pole filter certainly performs better than my outboard audio filters! ■

Reference

1. Yaesu Musen USA, Inc., 7625 E. Rosecrans Avenue, Unit #29 Paramount, California 90723. "XF-32A, 8-pole, SSB Filter for FT-101B." $49.00 plus $1.00 postage.

Put Your SB-10 on 160m

by
Arthur Eckman WA2ECI
11 Fort George Hill
New York City NY 10040

Having two Heathkit SB-10 sideband adaptors for use with my Apache, I converted one to 160 meters for use barefoot or with my Apache final. There is at the input of the SB-10 a pair of 45 degree phase shift networks, providing a total of 90 degrees rf phase shift. Each consists of a series of exact value capacitors (one for each band), and a ½ percent 50 Ohm resistor.

I used the 80 meter position of the bandswitch for the 160 meter conversion, as that provides the most inductance in each tank circuit. The value of the 160 meter phase shift capacitors was determined in the following manner: First a graph was made of the provided phase shift capacitor's values versus frequency. Then I extrapolated the graph to get an approximate value for the capacitor for 1.8 MHz. It turned out to be 1200 pF. I then purchased a pair of 383 pF capacitors which when added to the existing 817 pF 80 meter capacitors provided 1200 pF each.

The various tank circuits were padded to 160 meters as follows: 120 pF was added across each section of the dual 50 pF balanced modulator tank variable, 36 pF was placed across the 80 meter coil in the 6CL6 tank, and 150 pF was placed in parallel with the 6BQ5 tank variable.

With the balanced modulators unbalanced, about 2.5W of 160 meter input yielded over 5W of output. Sideband suppression was about 30 dB at a frequency of 1.880 MHz, plus or minus 5 kHz.

Desiring to use the SB-10 at frequencies below 1.850 MHz, I determined a more appropriate value for the 1200 pF phase shift capacitors. Using the slope of the graph at 1.8 MHz, I calculated I would require 1240 pF capacitors. With these capacitors in the circuit maximum suppression was at 1.825 MHz.

Normal operation can be restored on other bands simply by removing all padding capacitors.

I drive my 160 meter SB-10 with a hastily built novice special from the *Handbook*. To use the Apache pi network on 160 meters, place the bandswitch in the 80 meter position, and add the capacitors shown in Fig. 1. Put 730 pF at 2000 volts in parallel with the plate tuning variable capacitor and 3150 pF in parallel with the loading capacitor. The capacitors used for the phase shift network can be obtained for $2 apiece from: Leeds Radio Co., 57 Warren Street, New York NY 10007. ■

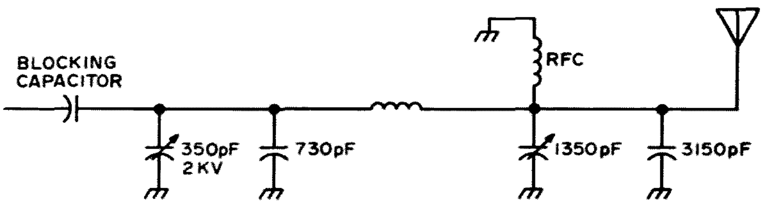

Fig. 1.

Fr Bob Gardiner W6LZJ
118 Gaviota Ave
Long Beach CA 90802

WH6DBF - K1OXK - W6LZJ

Who can say where it began or how it got started? One just knows that suddenly there was this desire to communicate by amateur radio. I suppose watching my father building that Harkness two tube reflex and later as he assembled the parts to our first Atwater Kent on the "breadboard," the "bug," as it was once called, bit me! I had my turn at winding coils and putting together crystal sets for the boys down the street. (Early 1920s.)

Certainly, I shall never forget the day I completed the "Junk Box Short Wave Receiver" as per the instructions in Radio News Magazine. It had plug-in coils wound on the base of old radio tubes; some of the coils being somewhat longer were wound on toilet paper cores and then glued to the tube bases. Carefully, I hooked up the batteries and turned on the filament switch. It worked! I shall always remember that British accent as the announcer said: "This is GSD, Chelmsford, England....the pride of the British Empire." (Late 1920s.)

My first transmitter was a 20 A operating just in the high end of the broadcast band. I tucked the telephone type carbon mike inside the horn of the Edison phonograph, and cautioning one of my brothers to keep the spring wound and the record playing, I hopped on my bike and off I went to my grandmother's house, about three miles away. Lo and behold I found it on her Atwater Kent Radio. The Dance of the Hours was not loud but to my ears it sounded just great. Wonder if they had an FCC in those days and if they did would they have taken me in? If not, would what I have told you here be a case for a retroactive hustler?

From the day I was able to hear Hersh Calvert and the hams of Pasadena on my junkbox radio, I knew that some day I would be a ham too. A friend of mine at John Marshall Jr. High School by the name of Harry Grace was a ham radio operator and showed me his station. However, he only operated on CW so that as I did not know the code well enough to copy, I was not greatly impressed with Harry's station. Later I was to be permitted to speak into the mike at Dow's Radio Store on Colorado Street in Pasadena. Dow had his big rig just inside the front

window in those days. I joined his ham radio class but I just didn't learn the code fast enough.

The day World War II ended I stopped at a drive-in in San Clemente to get a cup of coffee. There I met a ham whose call I've since forgotten but I caught the bug again from him. Somehow I acquired a beautiful Scott or McMurdo Silver Radio in a chrome or nickel plated cabinet. How that cabinet shone when polished; you could see to run the comb through the locks (in those days I had hair). It was there that I learned to light up a defective flourescent lamp with the rf generated by a low power oscillator.

One of the lads in our Rotary Club High School Youth Group by the name of Ted Casad showed an interest in studying for his ham ticket. So thinking that I too would get mine, I worked with him through the hours of sending and receiving code and studying the theory. When we went to the FCC offices in San Diego, Ted passed the code test, I flunked. Ted became W6AMP. How appropriate after all that study....to get A M P.

When we moved to Honolulu, Hawaii and St. Peter's Parish I purchased an Hallicrafters SX-28 and listened to the hams whose ranks I still longed to join. I became acquainted with KH6BFF "Baker, Fox, Fox." Is there a ham who hasn't worked Smitty? He has handled traffic for and in and out of the Islands before, during and after the war. Whenever Smitty signed his call to end a QSO, there'd be another call waiting, usually requesting a phone patch into the Islands. Smitty is as hospitable in person as he is on the air. You would never know that he has a sight handicap unless you were to visit him.

One day while visiting the Mental Hospital on the windward side of the Island of Oahu, I noticed a fine beam antenna riding high on a tower. I rang the doorbell wondering what I might say as an excuse for stopping. The greeting I received quickly dispelled my misgivings and soon I was looking at a ham radio station shared by Bernie and Kayla Bloom (who later became editor of 73). I learned that since Bernie was a psychiatrist on duty at the hospital most of the day, Kayla was able to take advantage of the band openings which were very good in those days.... 1958 - 1959! Kayla had a contest going with Bernie and the results were depicted on a huge map displayed on one wall of the shack. There were two colors about evenly divided around the world as the

pins represented their DX contacts. I was invited by Kayla to visit the HARC, The Honolulu Amateur Radio Club, which met at one of the U.S. Army Forts out at the end of one of the buslines from town. It was dark there at night and not easy to reach after hours. Later I was to be the instrument by which the board of directors of the club were to be persuaded to move the club meeting place to the parish house of St. Peter's Church.

Fate had finally smiled upon me! One of the clergy stationed out at Wiamanalo Beach, Lamar Speiers, was a ham radio operator. I met Lamar and through his assistance and guidance learned the code, the theory and studied once again for that so elusive ham ticket. Yes, I finally passed the examination! While waiting for the call to arrive, I met a ham who was going to get married and whose fiancee wanted him to give up ham radio, first! He had two Heath Kit rigs for sale. One the DX-35, the other the Apache. I bought both in my enthusiasm. Neither was in working condition so that when my ticket arrived one really gorgeous day in December of 1958, I got that DX-35 out on the floor and compared it with the wiring diagram (yes, fortunately it came with the rig). Ah, there it was, one of the wafers of the band switch had a broken or missing contact. I installed a SPST toggle switch in such a manner that when I reached into the cabinet by sticking a lead pencil (eraser-end-first) through a tiny hole in the rear of the set, I could just throw that switch. It connected an rf bypass condenser to ground...or did it?

By noon of the day my call, WH6DBF, arrived I was on the air calling "CQ, CQ, CQ, de WH6DBF, WH6DBF, WH6DBF k." I was answered immediately by a ham in Pearl City out by Pearl Harbor. 40 meters was working!

I ordered a custom 3 element monoband for 15 meters. It was made for me by an antenna manufacturer in Honolulu. Finally, one Saturday afternoon, one of my congregation, David Chang (also a ham radio operator, though not active at the time), Smitty KH6BFF and other ham radio operators in town converged on St. Peter's Church and helped me install the beam atop a rotor and mat on the roof of the rectory.

I am afraid I spent more hours that first year than I should have in CW QSOs

around the world. My goal: to get that General ticket before the Novice ticket expired.

In August, 1959, I was invited by KH6CUP, the president of Precision Electronics (my favorite ham store in Honolulu) to man a Novice booth at the 1959 ARRL Convention held in the Kaiser Hotel Building. I won only one contest in my life and that was during the convention; I was given a set of crystal earphones as a prize for having the most verified DX QSLs in the Novice class. I still have those lightweight "cans."

The definition for privilege in the American Heritage Dictionary here at my desk is: "...benefit enjoyed by an individual or class." I like that! How better can one describe the thrill that goes with passing on to others the know-how of ham radio? It is definitely my privilege as a radio amateur to give to men and women who are interested the opportunity to become licensed amateurs. Just as soon as I was oriented as a Novice, the station operating, the antenna trimmed and set, my QSL cards printed and the ink scarcely dry...I was organizing a class for Novices and Generals. David Chang of my congregation who did so much to assist me in Honolulu took the class for Generals; I took the Novices.

If you ever get the chance to visit the HARC in Honolulu, do so! I have never seen a more dedicated group of men and women, boys and girls as constituted the Honolulu Radio Club. Hams came from the other islands to make the meetings. Young people sat up front busy taking notes while the speaker for the evening told us of the mysteries of skin effect and the ins and outs of swr. After the serious part of the evening was over, there was a big drawing for the many door prizes, a chance to swap one's "goodies" for someone else's. The refreshments were often homemade and donated by one of the YLs, or are they Female Radio Persons these days? I loved them all.

Suddenly, it was all over! We packed all our earthly goods in a sea van including the ham radio gear. I made a presentation of the 15 meter beam to a friendly young Novice in Honolulu. We sold our Wurlitzer 2-manual spinet to another ham friend, KH6OES, and embarked for Boston, Mass.

The night of December 1959 when my Novice ticket expired, I sat up until midnight wishing

that I had a rig for a last CW 73. I had tried all over Boston to find one ham who had a Novice rig he might let me borrow for that last night. It wasn't to be. Perhaps, however, it became a spur to go on for the General. I learned that one could study for a ham ticket at MIT in Cambridge, Massachusetts. It was there that I met Bill and Marie Welch; it was there that I took the Technician test and then dropped out because of the press of church activities in Boston's South End. I was stationed then at St. Stephen's innercity mission.

When K1OXK came through the mail, I bought a Gonset Communicator 3. I met hams all over the state. I joined the Six Meter Mobileers and the 51.30 Club which met on the air every night to chat and once a week for business at 51.30 MHz (only it was MCs in those days). The social affairs of the fifty-one-thirty club were great. I still miss the contacts I made on six meters. They were gentlemen and ladies all.

It was through a contact on six meters that I met Joel Nichols K1MUE. I was later to be asked to join that confirmed bachelor in Holy Wedlock with the widow of another ham friend of mine. Joel and Gladys were married in the home of K1KQJ, Karl Miles, the friend of every six meter operator within working distance of his hilltop home in Wilton, New Hampshire.

Our first Vicarage in South End Boston was two doors from the New Haven railroad line. If I happened to be on the air when the train came by, I took a bit of ribbing from my friends in the QSO. "Why don't you get off the track and let that train go by?" "Is your shack built over the tracks?" In the second Vicarage we were ensconced in a former hotel for women provided the church by the YWCA. The shack was in a corner room on the fourth floor. Ed, from "the garden spot at Scituate on the south shore" helped me get the six element Hy Gain beam installed. You would have appreciated the stir we caused when Ed decided we didn't have to disassemble the beam when it came down from the roof of the small four story tenement by the New Haven tracks. Tied to a rope and dangled over the edge of the roof, the antenna was lowered slowly to the front walk. Ed took one end and I the other and with 20' of boom and all the elements intact we began walking the ¾

of a mile that led to the new QTH. Traffic, both mobile and pedestrian stopped to gander at this contraption with many arms and four legs maneuvering down the walk. "What is it?"

It seemed appropriate at the time to respond with: "It's a TV antenna for getting stations from out of state!" I'm sure many thought that that was just what it was.

One hears a great deal of conversation about hams who stay on six and two meters, content to operate with Technician class licenses. Certainly there is much to be said for doing so; I enjoyed those years beyond anything I can now tell you. Friendly QSOs every evening I was free to operate. Volunteers when needed to help install another new beam or to repair an old one were available as close as the microphone on my rig. DX was just as thrilling on six meter skip and when working the aurora as it had even been on the low bands.

You might wonder then why it was that I even bothered to go for the General ticket. I remembered Bill Welsh's admonition: "Don't get stuck on six meters...go for your General!"

I had only tried once to pass that insurmountable hurdle and that had been in Honolulu. I was at that time more concerned about passing the theory than I was about the CW test. After all, I was in CW QSOs at some time of every day — working actually around the world. For every DX contact I would answer requests for contacts from California and every other state in the Union. You know what happened, of course! I flunked the code test! All the numerals sounded like Js and Zs!

In 1964 we moved to Andover and took a parish in Lawrence, Massachusetts. Here I had the use of a rectory, a ranch style house with a full basement. One corner of the basement had been partitioned off as a den. It was here that I set up the six and two meter rigs. By this time we had disposed of the Gonset 3, purchased and used for some time a Gonset G-50, and now owned a Clegg Zeus and Interceptor for six and two meters. Shortly after moving to Andover I arranged to spend a few hours each day copying the code tape on a government surplus machine. Finally, with new confidence in my code speed and accuracy I thought I was ready to go before the FCC examiner.

I made arrangements to take the General examination at the New England Hamfest in the New Ocean House Hotel in Swampscott. My friends cautioned me that it would be harder there due to the confusion and noise. I was the last one to be allowed to "send" the code after passing the receiving test. Thus, as I recall, among the last to enter the other room where the test for the theory was being administered. I finished so soon that I thought I must have missed something, and took another look before turning in my test. You know what a thrill it was...when I came back and read my name up near the top of the list of those who had passed!

Now, it was a whole new ball game; only a ham who has been on six meters or two with no hope of working the low bands can know how difficult it is to get into a good CW contact on a regular basis. I had missed those CW QSOs in the Novice portion of 15 meters...a window wide open to all the world with a vast view of all the continents and many ships and islands in the seven seas.

One half of my shack now became a low band station with "my poor man's Collins: the SX 117 and the HT 44, matching units by Hallicrafters." The rectory yard on the west side now became a small antenna farm. Inverted Vees for 80 and 40 meters, a 2 element Hy Gain beam for 10, 15 and 20 meters, and stacked six and two meter beams. I've never had it so good since!

Here in Long Beach, California, we live in an apartment, and while our landlord is a former ham, there really isn't much room for a satisfactory antenna installation. I live in hope; if any K or W6 reads this sad tale, and wants to make a fellow ham happy in his "old age," please drop by and let's see if we can't put up an antenna that will at least work Honolulu. I hate to think that I will have to move back to New England to get on the air again. Still it wouldn't be such a bad idea; I'd like to see and talk to my many friends back there once again. One more reason for having an antenna that works at my present QTH!

By the very nature of my profession I meet many people of all ages and races. But if I had to choose a hobby to take the place of ham radio, I'd be lost. Nothing I can think of takes the place of amateur

radio; I sincerely hope that in the years to come every generation of young people will be encouraged to become amateur radio operators and to use their talents to communicate across the seas and perhaps some day throughout our solar system or beyond.

Once a year in the early fall when the resort rates fall to levels a ham could afford to take advantage of, a group of six and two meter hams used to get together for a weekend of food, fun and fellowship. A fine supper around a large table, a speaker or just table conversation during the evening and then the next morning after early coffee together we'd go somewhere for breakfast. Our genial host for those Friday night affairs was Jim K1VPE of Moody Beach, Maine. His XYL Betty would have everything all set and ready for us when we arrived. Jim would open up his private den (like a small night club with tables and spectacular paper on the wall...and a dandy bar) to our small group. One of the rare treats that were a bonus of those weekend retreats was to awaken early and walking upon the beach see a Canadian goose land on the sand nearby. What a proud bird they are. No prouder bird than that ham who for the first time opens the envelope and removes his FCC ticket to the airways. No prouder member of the human species than that ham who having built his first rig, turns it on and it works! No happier ham in all the world than the operator who having called his first CQ... hears his call coming back from another station... down the street or from across the world it's all the same!

I know I could write a book about the fun and people I've met in ham radio. There just isn't room in *73 Magazine* for it; but I am pleased that I had this opportunity to share some of it with you. If any of those fellows I've had the pleasure of helping to get their tickets should read this, I certainly would like to hear from them. Where they are living, what sort of a rig they're running and what's new with them since we last talked.

If you are not a ham and are looking for a way to make lasting friendships and a hobby that's enduing, write me or visit with your nearest ham and go with him to a ham radio club. You'll be glad you did! ■

Maintenance Musts

Paul Schuett WA6CPP
14472 Davis Rd
Lodi CA 95240

Anyone who holds an amateur license of Technician or higher, or a first or second class radiotelephone license, should be capable of performing repairs and maintenance to his own, or almost any, equipment. The FCC, by issuing the license, has certified the holder as being competent. The licensee should be able to prove it.

In fifteen years of commercial broadcast experience, I have only needed to ask outside help two or three times. Of course, in a number of situations, there was another engineer working with me on a project, and two heads are better than one; but more often than not the broadcast engineer, as well as the amateur, is on his own. Using common sense and remembering his theory will solve almost any problem that comes up.

Most troubles that happen can be listed in six categories. Arranged from the simple to the complex:

1. Tube troubles.
2. Power supply troubles.
   a. Plug it in
   b. Blown fuse
3. Misadjusted circuits or controls.
4. Dirty contacts or controls.
5. Loose or broken connections or wires.
6. Deteriorated components.

Tube troubles happen most often and are relatively easy to correct. First, look to see if all the filaments are on. Simple as this sounds, there are many people who don't do it. Find out which circuit doesn't work and substitute tubes in it; or better yet, check them all in the tube tester. One of the first things I bought when I established my amateur station was a reputable tube tester. The Eico 667 comes in kit form, is priced right, gives a valid test, and has instructions on how to set up for new tube types. An adaptor is available for testing older tubes in case you run across an 83 or something; a magnoval and ten-pin adaptor are also available.

This unit comes with a pilot light checker in the novar socket. I replaced the socket (30 cents or so) because many novars have the air seal at the bottom, and this prevented the tube from being inserted in the socket. (Pilot lights can be checked from the grid cap to ground.)

It is a wise practice to throw away weak or burned-out tubes. It is also wise practice to keep a spare or two around just in case you lose a tube at 5:10 pm Friday and your friendly parts house won't be open until 9:00 am Monday. I keep at least one spare for every tube type, or if more than six are in use, at least two spares. For finals, I keep two so that they will be both of the same approximate age in case of being changed. Tubes don't cost so much that the smaller receiving-types can't be kept on hand. The popular 6146 is relatively inexpensive, although a 4-1000A is a different story.

From experience, most power supply troubles are caused by something not plugged in, like the ac cord, or a more exotic example, the rectifier plate cap is not connected. Look for dirt on the plate cap. It goes without saying to look at the fuse early in the game; I learned this one the hard way once.

Most amateurs should be able to locate misadjusted circuits or controls. Tanks may not be at resonance. Neutralization may not be correct. Bias or drive may not be proper. A good VTVM and VOM are worth their weight in Extra Class licenses at this point. I have one of each. Eico and Heath make excellent kits, or you can go full blast and get a Hickok or Triplett. After building my kit, I sent it to the repair station for calibration since I also use it in broadcast work. Not having a voltage standard available, and not relying on the power company's 105-130 volt source, the $5 was well spent. With these units standardized, you can calibrate other equipment against them.

At one broadcast station, the FCC required the power to be reduced at local sunset. This was easily done by operating a switch marked "1000-250" on the transmitter. One operator somehow got confused and operated the control marked "Buffer Tuning." This took out two 807s and a fuse.

Dirty contacts are responsible for many things misfunctioning but can be difficult to find. A regular program of squirting contact cleaner (don't use carbon tet) into all rotary and lever switches and into all relay contacts will make troubleshooting ex-

peditions as rare as a contact with Tibet. A contact burnishing tool is quite useful, but please don't use a nail file. One way I have used to locate the more exotic problems of this nature is to put an audio tone (I like 400 Hz) on the line in question and trace the signal with a scope. With a scope you can tell the frequency of the signal, whether any attenuation has acted on it, or amplification; you can see extreme distortion, and if there is no signal where there should be, you know the circuit is open.

One broadcast station had several clip leads connecting various parts of the audio console. When rewiring the control room, I removed the leads and found one of the output channels didn't work. Using the signal generator-and-scope method, working back from the output, I found the signal was blocked by DIRTY SWITCH CONTACTS. Somebody had used these leads to bypass the switch instead of squirting the cleaner into the contacts.

Loose or broken connections can be braincrackers, especially the intermittent type. After disconnecting the ac and grounding all filter capacitors and high voltage points, pull and shake every wire you can find. Using an ohmmeter can show high resistance connections that shouldn't exist. After using the equipment, and removing all voltages, look for warm places (current thru high resistance means heat). Of course, if smoke comes out, you can find it right away. Check all connections against the diagram; check all socket voltages and resistances. In one commercial transmitter I found a missing ground wire on a meter switch rendering two positions inoperative. My own scope stopped working once; a filament lead rubbed where it went around a corner, shorting to ground, hence no filament voltage. Find out which sections work OK and which don't. Modern plug-in transistorized modular construction is wonderful. Pull out the defective board and plug in one that works, then do the maintenance at your leisure.

The operators at a broadcast station once told me the transmitter would turn itself off and they'd have trouble getting it back on. I figured they were running it wrong since I never had the trouble. One night, during routine maintenance, I couldn't get it to go on either. After three hours of pulling, pushing, kicking, tapping, etc., I saw an arc in the output section. The trouble was in a variable inductor —

the contact wheel was not making good contact and opening, and the overload relay turned the transmitter off. A very simple situation that took a long time, and a lot of luck, to find.

After any equipment gets old enough, components will deteriorate. Capacitors and resistors will change values, insulation will crack and peel, phenolic switches and circuit boards become brittle and crack, screws and bolts become loose and fall out, and all sorts of other mysterious things can happen. Often it is easier and cheaper to replace the whole unit than to repair it piecemeal. These printed circuit boards, if cracked, will in effect break the printed connections. Even a microscopic crack will open a lead. A bead of solder down the conductor will repair the break. For transformers and chokes, replacement will be necessary if the voltages deviate excessively from original values. Likewise, resistors and capacitors will have to be replaced if they no longer do the proper job. The enemy of components is primarily heat and dirt. If you keep both at a minimum, you will have minimum troubles in later years.

Place everything so that proper ventilation is assured — this keeps the heat down. Generally, commercially-made equipment and kits are well designed to remove heat properly. Leave lots of room for circulation of air.

Make dust covers for your equipment. At WA6CPP, the XYL is quite accomplished on the sewing machine, and made some plastic dust covers that exactly fit the various components, including the power supply-speaker units. When not in use, these are protected from the ever-present dust filtering in. At one commercial station, nobody dusted or vacuumed for three years before I got there, and the dust had turned to mud. Nobody will get mad if you use the vacuum cleaner to blow the dust out of things once a month or so.

Perhaps some of these suggestions reflect my work in commercial broadcast, but I don't think any of them are impractical for the average amateur. After all, when we have spent many hundreds of dollars and countless hours on our stations, we should take care of them properly. When, from time to time, something goes wrong, the license holder should be able to fix it. In some cases, you may have to use the land line to call your friend across town to give an assist, but it would be

QST QST QST de K6QX
The WORLD QSL BUREAU has moved to a New Address!! From now on, please send your cards to: 111 Farm Hill Way, Los Gatos, CA 95030 We promise the same dedicated service that W6KG has given you these many years.
73 ORM K6QX
(P.S. We'll still forward your cards to anywhere in the world for 6¢ each.)

CORRECTION

In the article, "Updating the Heathkit IB-1101," in the Nov/Dec issue, there are a couple of mistakes.

In Fig. 2, front wafer, V2 pin 14 and V3 pin 14 are reversed. V3 should be the top lead shown.

The printed circuit board in Fig. 3 has a mistake. The ground connection of the 7490 should be pin 10, not pin 9 as shown. Pin 9 is not utilized by this circuit.

OUR APOLOGIES to WA2APJ and WB2AQM, for transposing their photos on page 11 of the January issue.

embarrassing to me to send something to the manufacturer or repair station to have a broken wire fixed.

One evening I was trying to get an auxiliary transmitter to work. Having just started to work at the station, I was getting everything in A-1 condition, but it was impossible to get high voltage to that auxiliary. The tubes lighted up OK, and the meter showed crystal current and buffer grid drive, but that was ALL. I was about ready to check for bias voltage when I thought I'd check the primary supply. Well, this rig had two primary supplies — 110 volt single phase and 220 volt three phase. Somebody pulled the breaker on the 220. After that, it worked great. Let's see, that's reason 2, Power Supply Troubles, Plug It In. ■

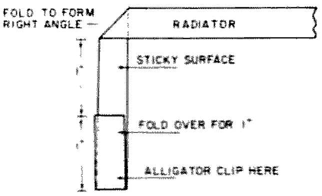

Alarm Foil Antennas

Larry Kahaner WB2NEL
4259 Bedford Ave.
Brooklyn NY 11229

While in my neighbor's house one day explaining how I can phone patch her brother in Germany, I spied a newly installed alarm system. It was the usual type in which thin foil is taped around the window to form a closed circuit. When the window is broken, the foil circuit opens and the alarm sounds. The foil looked so pleasant and neat on her huge picture window. Since I am always looking for new types of radiators (and what ham isn't?), I wondered about alarm foil. Indoor antennas are not new to me. I had some indoor dipoles in my old apartment but they always looked so ugly and had to be removed when guests came. Perhaps foil was the cosmetic answer.

Window foil is not as easy to obtain as one might expect. It seems that the alarm installers want to keep business to themselves and frown on home brewing interlopers. I called a few places and they refused to sell it to me. This is odd because both Lafayette and Radio Shack have it in their catalogs. I finally got a roll from the man who installed my neighbor's alarm. A 200 foot roll cost about three dollars. The tape I bought has a paper backing which is peeled away exposing a sticky foil. I made several tests and found that the tape could be applied to a painted wall and later removed without leaving

a mess. I advise against placing it on wallpaper.

My house has a crown molding on the top perimeter of the room and I applied the tape in dipole fashion starting from the center. At the feedpoint I folded the tape on itself for about one inch. The tape exhibits great strength to pulling apart but will tear easily if twisted. Fold the tape at right angles to prevent the coax weight from tearing it. If you make a mistake or tear the tape, another piece overlapped will make a tight contact despite the adhesive. Check with an ohmmeter if you feel insecure. I thought of different methods of feeding and decided that the simplest was also the best. I used alligator clips from my coax. This would allow me to remove the coax without taking down the antenna. Coax climbing a white wall leaves much to be desired.

With everything in place, I loaded up the rig. My match box was waiting in the wings. My transceiver loaded up easily with an swr of 1.7 to 1. Since my calculations were for the center of 20 meters, I peeled and cut a little off each end until it was perfectly matched for the center of the phone portion. I tuned and heard a very strong CQ from the Midwest. I answered pessimistically and he responded with a 57 report. Other reports from that area were also encouraging.

I added some tape to the ends and pruned it for the low end of the CW segment. That afternoon I worked 2 Gs, 1 I and 1 DK. All were better than 459 reports. Input power was 180 Watts. It is not necessary to add and subtract tape for each segment of the band. It is as broadband as any other dipole but I felt that any extra push was helpful.

The configurations of foil antennas are limitless. If your apartment is the right size you might try putting a reflector or director on an opposing wall in another room. With a matching network you should be able to work the low bands with a shortened antenna. It would also make a great "long wire" for the SWL who is apartment bound. Even though the adage "the higher the better" still applies, if you live on the 29th floor of a 30 story apartment house, the working difference between crown molding and baseboard mounting will be minimal. And, it will be better hidden on the baseboard. Window foil is especially good for sealing rf leaks in home brew chassis. And I have found that a folded dipole of foil hidden on the back of a dresser makes a fantastic antenna for commercial FM reception.

Dipoles can never compete with 4 element quads up 75 feet, and indoor dipoles even less. But for the ham living in the canyons of the big city an indoor foil antenna can be the answer to never getting on at all. ■

Walter Pinner WB4MYL
7304 Lorenzo Lane
Louisville KY 40228

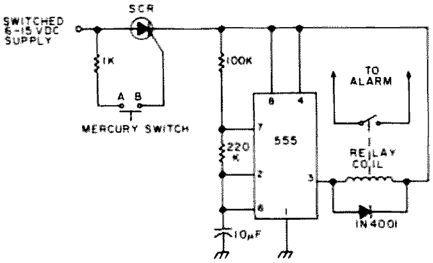

Alarm! Alarm! Alarm!

The simple alarm circuit described here may be built for about $5.00, and unlike most systems which merely turn on a light or sound a horn, may be set to intermittently energize a horn, lights or other signaling device, on and off at any speed you desire. This intermittent alarm will be easily recognized by you and not mistaken for just another stuck horn.

Once activated, the system cannot be shut off without disconnecting the primary source of power. In the standby or arm mode, the circuit draws no power until triggered. The unit may be operated on any dc voltage between 6 and 15 volts. The relay

chosen should be compatible with the supply voltage; however, the ON/OFF timing will be independent of this voltage.

Applications of this alarm are varied and limited only by your imagination:

Automotive: hood, trunk, doors.

Motorcycle: mount under the seat — any attempt to move the cycle off its stand will trigger the alarm.

Equipment: mount inside or on the back of the rig — attempts to physically move the equipment will trigger the circuit.

Pool or Sump Pump: Replace the mercury switch with a pair of sensor leads mounted just above the desired water level. Water touching the leads will trigger the alarm.

Touch Switch: Sensor leads or a grid board will activate the circuit when touched by hand.

The circuit is simply an SCR switch activated by a mercury switch or sensor lead. Once triggered the SCR remains ON supplying operating voltage to the 555 timing IC. If the alarm device uses 200 mA or less, the relay is not needed. If the load however, uses more than 200 mA a relay should be incorporated and have a coil rating for the operating voltage used.

Due to the limited number of parts in this project, assembly on a small piece of perf board or plastic may be used. The use of a small relay will allow you to build this alarm on a 1X2 inch square board or if a smaller unit is required, the relay may be outboarded.

All components are available through your local Radio Shack stores. ■

73 READER SERVICE

Circle appropriate Reader Service # for desired company brochures, data sheets or catalogs and mail in to 73. Include your zip code, please. Send money directly to advertisers. *LIMIT: 25 requests.*

ADVERTISER INDEX

☐ *NEWSSTAND* ☐ *SUBSCRIPTION*

READER SERVICE

73 Inc., Peterborough NH 03458
February 1976

Please print or type.

Name ______________________ Call ________

Address ______________________________

City __________________________________

State ____________________ Zip _________

Coupon expires in 60 days . . .

NEVER SAY DIE

. . . de W2NSD/1

EDITORIAL BY WAYNE GREEN

from page 17

The general rejoicing was cut short when we started to come back to a W9 which had been calling, only to see the Bird wattmeter drop off rapidly to zilch . . . followed by a little curl of smoke from the TPL amplifier. Well, thank heavens we'd made one contact before Murphy took over, zapping the most expensive and hard to replace part of the system.

Oscarites . . . we shall return.

OH PIONEER!

Many of us reflect, as we drive along listening to the idle chatter coming through the repeater, that radio amateurs have been outstanding in their pioneering work . . . and we wonder how we might be able to do something of value. It's a little depressing to think of being up against a professional laboratory or a well-funded government grant project, but the fact is that there are many areas where we have a decided advantage.

An article in the December issue of *Modern Photography* pointed out how much work there is to be done in the field of Kirlian photography . . . a sort of electronic photography discovered by Semyon and Valentina Kirlian in the Soviet Union. There was quite a bit about this in the pocket book *Psychic Discoveries Behind the Iron Curtain.* The pictures are made by using a low current supply, around 10,000 volts, and putting the film and subject between two plates with this voltage on them . . . exposure around two to six seconds. What results appears to be tied in somewhat with the human aura, plus some other impossible-to-explain effects.

A Kirlian photograph of a leaf, part of which had been cut away, still showed the complete leaf! Bright points of light appear on photos of hands and these appear to be concentrated at the same points used by acupuncture!

This is a new field to research, is relatively inexpensive, and would seem ideally suited to many radio amateurs who have the needed combination of electronic and photographic experience.

Another area ripe for the lone individual, and not requiring a lot of lab equipment, is the development of computer programs for the new microprocessors . . . the major weak link in the growth of computers today. The writing of complex computer programs is necessarily the work of an individual, and the time required is of an order that greatly restricts commercial companies from just paying someone to do the job.

While an amateur radio set is ready to use when you plug it in and turn it on, like just about every other electronic device with which we are familiar . . . not so the computer. Your not inexpensive microcomputer will just sit there and not do a dammed thing when you plug it in and turn it on . . . unless you have some programming to get it going. Newer systems such as the 6800 series computers have a ROM included which has the programs on it to get the system up and running, but the 8080-based systems don't . . . as yet.

As of this date, to the best of my knowledge, none of the microprocessors have anything much more than Basic language ready to use. The Altair Extended Basic is being worked on and should be ready before long, but it's taken a lot longer than anyone thought it would to get the bugs out of it. Also, as far as I know, none of the systems are yet ready to use floppy disks, mag tape, or even cassette tape for much more than program entry. All of these things call for programs to be written . . . and that means a lot of time and work. This also means that there is a very wide open opportunity for some people to contribute substantially to the progress of microcomputers.

READER SERVICE

Now look here, good buddies, I don't want to come off as a scold, but the reader service department has been griping something fierce to me that there are several readers who have not been holding up their end of things . . . that they haven't been sending in their reader service requests. Mary, who takes care of that department, has those great big liquid brown eyes and if you could see the tears well up in them when she runs out of labels to send our advertisers you would run, not walk to your mail box and send in for some of her loving care.

Yes, I know you don't want to rip up the magazine, and you don't have to . . . if you don't have a copier handy then just make a note of the advertisers or the numbers of them on a card or shred of paper and send it in to Mary . . . she's a lovely person. Please don't be callous and cruel and forget our Mary.

Look, just because you ask for information doesn't mean you *have* to buy something . . . at least not from every advertiser.

Well, anyway . . . get busy and mark the heck out of that coupon . . . okay? ■

MARCH 1976
$1.50

73 AMATEUR RADIO

Special Surplus Issue

WITH I/O MICROPROCESSOR SECTION!

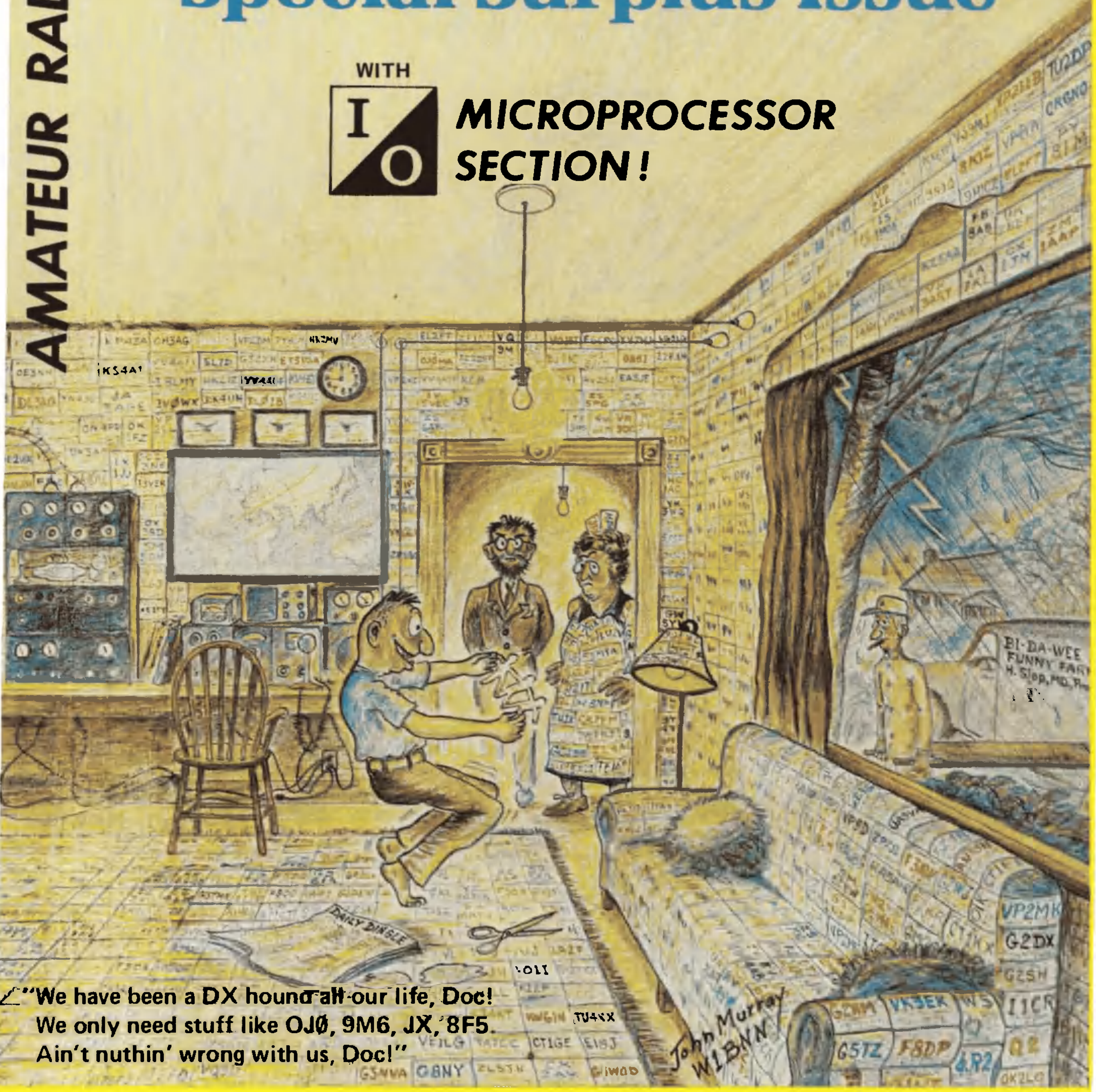

"We have been a DX hound all our life, Doc! We only need stuff like OJØ, 9M6, JX, 8F5. Ain't nuthin' wrong with us, Doc!"

73

#185 MAR 1976

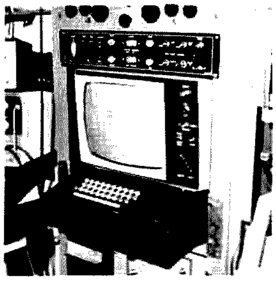

80

4

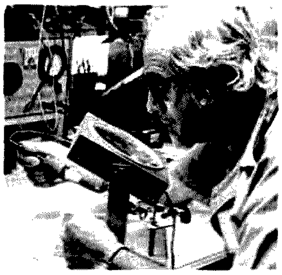

72

28

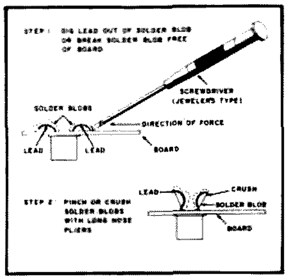

73 Magazine (where the action is) is published monthly by 73, Inc., Peterborough NH 03458 (a good place to live). Subscription rates are a ridiculously low $10 for one year worldwide, $17 for two years, and $17.76 for three years (the buy of the year?). Second class postage paid at Peterborough NH 03458 and at additional mailing offices. Phone: 603-924-3873 (hey, don't call much after 4:30 pm EST, okay?). Microfilm edition – University Microfilms, Ann Arbor MI 48106. Tapes – Science for the Blind, 332 Rock Hill Rd, Bala Cynwyd PA 19904.

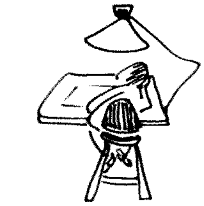

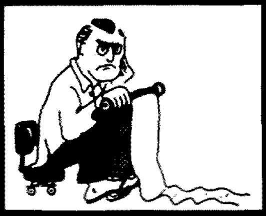

NEVER SAY DIE

. . . de W2NSD/1

EDITORIAL BY WAYNE GREEN

SUE THE BASTARDS

Though we try to put as good a face on it as we can, the fact is that every now and then we have our little trouble spots within Amateur Radio. Alas. When we run up against someone who is being unreasonable (defined frequently as not agreeing with me), we get mad and try to get someone else to do something. We may try to bring the FCC into our problem . . . or even lawyers . . .

May I remind those who are caught up in a repeater war, fighting a pirate repeater, or trying to keep an organized net going through deliberate interference, that though it is difficult not to lose perspective, that these are the times when you should reference the amateur regulations . . . the part where it says that we are largely self-regulating. You are now in a spot where self-regulating is called for and you haven't figured out how to regulate the SOB who is making life miserable for you.

Further reminder . . . this is the time when you will find out who has the most brains. You are in a fix and you need to be able to outsmart someone . . . the FCC is no answer to anything . . . neither is a lawsuit. If you bring the Candy Company in you could easily end up with a bunch of rules which you and several generations of hams will hate. And if you bring in the lawyers you could end up with laws you won't like. Remember that when cases get tried in court they form legal precedents, and once set, they are very difficult to upset.

What I'm saying is that there are a lot of very good reasons for Amateur Radio to stay self-policing. Any time we can't seem to make it stick by ordinary peer pressure, we ought to call a council of amateurs and see if someone can come up with a good proposal. It may mean a mass visit to an offending amateur to try and reason with him. If that doesn't work, then either sterner measures or else more brainstorms are needed . . . but, please . . . keep the lawyers and FCC out of our problems.

CB GROWTH

All those beautiful stories in the newspapers about CB have had an impact, as is obvious by even more articles appearing in the papers. The FCC reports that while it took sixteen years for the first million CB licenses to be issued, the second million took eight months, the third million three months . . . got the picture?

Now let's suppose that our national organization of Radio Amateurs got busy and set up a PR firm to start getting articles on ham activities in the papers and magazines. The media is the message these days, as all of us know, and newspaper articles obviously make an enormous difference. We wouldn't get millions of hams, but we certainly would see a big upswing in interest . . . clubs would find people clamoring to get into their license study classes and we would start having enough amateurs to get activity on some of our presently vacant bands such as 50 and 220 MHz. Let's put 28 MHz in there too.

What would such a PR effort cost these days? Maybe $100,000 a year . . . about 35¢ per amateur . . . about 5% of said national organization's annual budget . . . and, if they really have the 100,000 members they claim, that would be one buck per, cheap enough. If I mention it to them they'll just get mad, so it's up to you to bring it up. Don't mention me.

OSCARING

Even though I'm only getting about 20 Watts or so into the 432 MHz antenna, I've been getting a lot of 5x9 reports, so it definitely works. The main frustration about working mode B of Oscar 7 is that there are so few American stations active. Some satellite passes see the 50 kHz segment virtually empty with me in there loud and clear calling CQ, plus maybe one or two CW stations doing the same. W2BLV and W2BXA, should they shut down, would just about empty Oscar on many runs.

On the European passes it is a different story . . . QRM all over the place. I suspect there are more French stations on Oscar than U.S. I've worked 15 countries as of now and have several more to go that I've heard coming through.

Here is my setup . . . it doesn't look like much. It starts out on transmit with the little Ten Tec Argonaut. That feeds on 28 MHz into a Carmichael upconverter with output on 432 MHz. That feeds into a home made 4CX250 amplifier with about 60 Watts emerging . . . that big thing on the bottom shelf . . . used to be the amplifier for WR1ABV on 450 MHz . . . and probably will again one of these days. That goes by coaxial resistor up to an 11 element circularly polarized antenna which stops working when it rains. The antenna controls are on top of the Argonaut, azimuth and elevation. A Vanguard converter is mounted up at the two meter circularly polarized antenna and that feeds down to the Yaesu FTDx-560. A little Sony tape recorder catches the results. The great big power supply on the left is for the upconverter, a tube affair, and feeds it a mundane 250 volts at about 75 mA. The VHF Engineering power supply on the top shelf runs the Argonaut and the Vanguard converter.

I recommend that you do a little work and get active on Oscar . . . it is a ball and we could use another few dozen good signals on it. Some of the

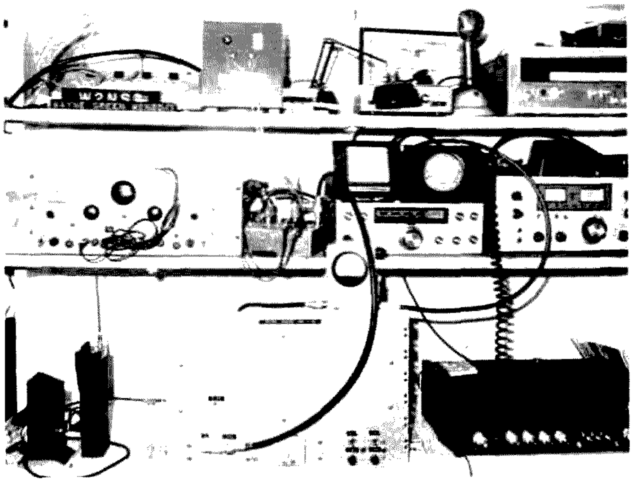

chaps are working out fine with as little as two and three Watts. It isn't easy to get on mode B, but then being difficult is one of the things that makes it fun.

Amsat has announced that G3IOR has earned the Oscar ten district award, having worked all ten U.S. call districts via Oscar. One other interesting news event via Oscar . . . VE2BYG and WB4BWK have linked their microprocessors up via Oscar! Several fellows are working on this project so we can look for a lot more of that to come.

MODE B PROBLEM

Amsat has passed the word that a few of the mode B users of Oscar 7 have been running too much power and it has been draining the batteries. Listening to some of the stations coming through leaves little doubt as to which ops are doing the damage . . . a few signals stand out with rock crushing clarity and you know those fellows are not running any 100 Watts.

When it isn't raining I find that I have a fine signal through Oscar, with most reports running 5x8, and I'm pushing about 20 Watts into the antenna. I can barely hear my CW signal when the antenna is wet.

Amsat suggests you tactfully suggest some lowering of power when you contact one of the superpower boys.

ELIMINATE A HURDLE

Considering the excessive delays in getting license applications processed, an additional hurdle just isn't all that needed. In this case, it is the failure of many applicants through no real fault of their own . . . but due to their study guides being behind the times or not complete enough.

A nice letter from WN5OIC claims that he and his 14 year old son failed the General Class exams because only about two-thirds of the exam material had been covered in their study guides . . . one put out by the ARRL and the other by another well known publisher (not *73*). They now have the *73* General Class Study Guide and they should have no further problems.

If you know of anyone working for a ham ticket, you really should acquaint them with the *73* series of books which are, as far as I know, the *only* study guides which cover all of the technical material you'll find in the exams. Some of the other books are so far out of date that it is incredible. One was written by a ham who has been dead for many years, and even though it is hopelessly outdated the publisher continues to push it. One, written in the 50's, was reprinted again in 1975 and is being sold today through a ham magazine that deserves to remain nameless.

Look up the license study series in the Radio Bookshop ad. Clubs can order in quantity and get a nice little discount if they write to the Bookshop. Orders should be for at least 10 books in any assortment. This helps anyone who is taking a club-given study course to get the books he really needs . . . and the code tapes.

MOBILE ALL BANDS?

Chuck Martin WA1KPS, the chap who runs Tufts Radio . . . New England's largest ham distributor . . . stopped by *73* the other day to see how the Oscar mode B work was coming (we're using his 432 MHz amplifier). He had brought along a long two meter beam to take to the top of the nearby mountain and run checks on how much extra Oscar time and distance operating from another thousand or so feet would give.

The Tufts truck is a car thief's delight, bristling with antennas. But when Chuck calls out "Breaker One Nine" he means the 19-79 pirate repeater, not CB. Chuck is mobile on all ham bands from 1.8 MHz up through 450 MHz. Can anyone beat that?

The Oscar tests? It turns out that Oscar can be heard over two minutes earlier from the mountain top toward Europe than down in Peterborough. There wasn't as much difference to the west, where the mountain was not blocking reception.

RFI BRAINSTORM

While a few amateurs have been pushing hard to get the RFI bill into law, a letter from Ted Chernin KH6GI on the subject made a lot of sense to me. He suggests that here we go again trying to get the government to do something that we could do ourselves . . . without fighting for any bills or waiting for the government to set up a $500 million agency to look into RFI cases.

Ted says why not get busy right now and either instead of or in addition to letters to your congressmen, write to the consumer magazines and ask that they include RFI susceptibility as one of their measurements on new electronic equipment such as television, hi-fi, and such.

Further, when you run into an RFI problem, drop a note to your favorite ham rag and ask them to pass the word. If you are able to cure said misery, pass the word (same route) on how you did it. Also, write to the manufacturer.

You might just make sure that dealers are not ignorant about RFI. You'll find that most of them will try real hard to blame the amateur or the CBer if there is interference, not the hi-fi set. He'll tell you just to write to the FCC and get the ham put off the air. Instead of hitting the guy, grit your teeth and explain about how these things are.

Consumer Reports, Box 1111, Mt.Vernon NY 10550, if you feel like

Continued on page 12

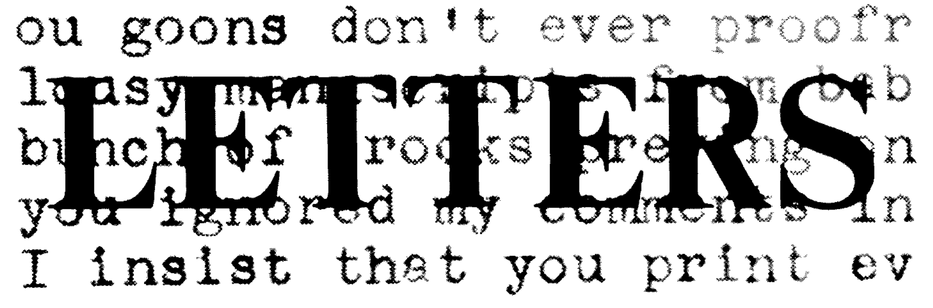

UP THE CREEK

Boy are you guys up the creek! Me an' my good buddy the Duster were mobiling easy up I-75 when we saw the biggest cotton-pickin' mobile antenna ahead ever seen! Well, we tried to modulate with him on 19 but he wouldn't copy.

Then Duster noticed a decal on his bumper that said, "Hang it up, CB! – Be a ham!!!"

Well we-all got rightly upset at him so we followed him into a diner along the way. We confronted him and he explained what a mess CB is and how he started reading *73* and before he knew it he had sold all his CB stuff to some trucker from Ohio and bought all kinds of amateur equipment. Duster an' I went over to a radio store and asked about classes at the local high school . . . and what do you know??? Now we're selling all of our CB things!!!

Amateur radio is really easy; I can't remember when I *didn't* know most of the questions on the Novice test! The code's a bit tricky but no real problem there.

What I would really like to know, is, how come I don't talk funny anymore?

Paul Valko
Sterling Hgts MI

HEARTBREAKER?

I have a problem which *73* may be able to help me with.

October 23, 1975 I had a Kordis heart pacemaker installed or implanted. The doctors told me that I could not use a power lawnmower, electric razor or any power tools which have a magnetic field revolving.

Since the pacemaker can be controlled magnetically and also electronically, it becomes evident that the antenna which runs into my heart could pick up harmonic frequencies which would put the pacemaker in a passive mode.

I have written the Kordis Company and a spokesman for the company called me on the phone from North Carolina and gave me some of the things I could not use, but he had some reservations about harmonic frequencies.

What I need to know is whether *73 Magazine* could ask its readers if any of the amateurs who read it could give me the names of active amateurs who have pacemakers and whether they have any deleterious effects from radio.

One of the things which the Kordis people told me that would deactivate the pacemaker was a pulsed signal.

Since I work mostly CW, I am not

active at the present time. I do not expect any person to stick his neck out, but would appreciate the names of persons I can contact by phone who qualify as recipients of pacemakers and are amateur operators now active.

Richard M. M. Hudson K8YYP
P.O. Box 284
Geneva OH

UNBELIEVABLY GOOD

The service from S.D. Sales is unbelievably good!!!

A clock kit ordered on 22 November 1975 arrived here on the 28th, and was operating that evening. Further, when I wrote S.D. Sales that one segment of one of the 7-segment displays was weak, they sent me three (I) FND-70 LED replacements. Free!

Amateurs have always demanded high quality components and fast service. What is unusual today, however, is to find a company which provides both. S.D. Sales is such a company!

Theodore J. Cohen W4UMF
Alexandria VA

GRAND OPENING

I would like to report to you guys on the 2 meter opening which came through this area on the weekend of Dec. 6 and Dec. 7.

This opening lasted about 48 hours, working through the Mena, Arkansas Repeater, which is on .19-.79. The repeater's call is WR5AEM. It is located at the top of Rich Mountain at an altitude of about 3000 feet above sea level. It has an operating output power of about 25 Watts.

On this weekend there were 14 states working through this repeater. They were the following: Arkansas, Louisiana, Mississippi, Alabama, Kentucky, Tennessee, Indiana, Illinois, Iowa, Missouri, Kansas, Nebraska, Oklahoma and Texas.

We would appreciate you making the public aware of this opening.

Howard Holmes WB5NWV
De Queen AR

NO

I propose a standard color-coding system for mobile antennas so that one mobiler could quickly visually tell what band another mobiler was operating at that given time: 80 – grey/black; 40 – yellow/black; 20 – red/black; 15 – brown/green; 28 – red/grey (standard color codes).

The two colors could be colored tape (or paint) around a loading coil, could be put on a small "flag" at the top of the whip, or could be just 2 tape strips on a bumper.

How about it? Will you suggest it?

Ray Day WB6JFD
Palos Verdes CA

No – Wayne.

MAYDAY!

Enclosed is a memorandum from my log of a mayday that was received by JY3ZH, Zeedan Hussen, and myself 28 Nov 75.

Following is information I have been able to get from US authorities here in Germany and G3YPK in England.

1 Dec 75 I called US Air Force Europe, Air Rescue Service, Ramstein, Germany, trying to find out any information about W2ACS/MM. I was told by Major Bowen that the Air Force and Navy out of Italy had flown a total of 60 hours without any success. They also said they called the FCC trying to confirm the callsign W2ACS/MM. The FCC told them they had no record of the callsign ever being issued. They also could not find any information on the ship SCORPION.

G3YPK in London, England, notified the British Defence Ministry. G3YPK called me by telephone the 29th of Nov 75 saying the Defense Ministry had verified the callsign W2ACS/MM. They also could not find any registration on the ship SCORPION. I later found a 1956 callbook and found the call W2ACS.

I have tapes of the mayday that were sent to me by G3HAS from England. They are not complete but I can send a copy to you. They are of very poor quality.

There have been numerous rumors on 80 and 20 meters that W2ACS/MM was picked up. However, I cannot get US Air Force authorities in Ramstein, Germany to confirm this.

I realize that there is and will be a lot of criticism on how I handled the net but I'm up to it.

This is the first emergency I have ever encountered and now that it's over I know that if it ever happens again I will handle it much differently. I am better prepared.

At this point many amateurs in Europe are beginning to have their doubts about the mayday. There is widespread speculation that it was a hoax.

In a way I hope it was. I wish no one in the situation W2ACS/MM was in. The thing that bothers me is the way many amateurs here in Europe treated the mayday as a big joke. Contact with W2ACS/MM was lost many times due to interference (QRM) from many amateurs.

The upper 10 KCs of the 80 meter band is considered by a gentleman's-type agreement to be for DX only. Many operators tried to make us QSY because of this and when we didn't, caused considerable QRM. Many Europeans did not even know what a mayday was.

Myself, Zeedan and G3YPK managed to maintain control of the frequency for 7 hours. Many transmissions from W2ACS/MM were lost due to the QRM.

Would it be possible for you to investigate or turn this over to the FCC, since a US call was used? I do not know what to do. W2BFI Manuel R. Gonzales referred me to you. He is stationed here in Ansbach, Germany also.

Memorandum For Record:

Subject: Distress MAYDAY call received by DA1EK, 22: 5, GMT, 28 Nov. 75, from W2ACS/MM.

1. Reference: a) United States Army Technical Manual 11-490-7, with change 1. b) Laws Concerning Amateur Radio in West Germany. c) Federal Communications Commission, (FCC). d) Radio Amateur Law of 14 March 1949.

2. This is a memorandum for record to the log of DA1EK/WB5NDW/AE1EK.

3. Following is the information that was received from W2ACS/MM by this station, DA1EK, to the best of my knowledge. a) Date and Time: 28 Nov. 1975. 2:05 GMT, thru: 9 Nov. 1975, 07:15 GMT. b) Frequency: 3.793 and 3.796.

4. On the dates and times above this station received a MAYDAY distress call from: a) STATION: W2ACS/MM. b) NAME of OPERATOR: Tom Hapasig. c) LOCATION: 33.52 NORTH, 31.23 EAST. d) SHIP'S NAME: Private Vessel SCORPION. e) WEATHER CONDITIONS: Three to five foot waves; overcast skies; very low ceiling: light winds; no rain. f) Ship was taking on water fast due to a section of the mast breaking off and falling. The mast section punctured a large hole in the fiberglass hull. g) A total of five persons were aboard, which included his XYL h) All Maritime emergency equipment had been lost. The only thing left was a Collins Transmitter (Amateur Gear), one portable emergency beacon, five life vests, and a life raft.

5. At approximately 22:20 GMT, 28 Nov. 75 this station, DA1EK, relayed by telephone the above information to the 1st Armored Division Staff Duty Officer, Capt. Trahey. He in turn notified the Emergency Action Officer at USAREUR Headquarters, Heidelburg, Germany.

6. The following Amateur operators took action to contact the proper authorities in their countries (as well as many others who I was not able to copy down due to the confusion and interference at the time). a) JY3ZH-JORDAN b) 4Z4FW-ISRAEL c) G3YPK-ENGLAND d) I2BYE-ITALY e) DA2AS-GERMANY f) DA2UD-GERMANY g) DA1GW-GERMANY h) G3ALI-ENGLAND i) G3HAS-ENGLAND j) G4CKL-ENGLAND k) GW3PDW-WALES l) GW3AX-WALES

7. Messages were relayed to W2ACS/MM from DA2UD by this station, DA1EK, concerning actions taken by US FORCES Rescue Parties. DA2UD had contact with a rescue operations center. Any information concerning these messages should be directed to DA2UD through the USAREUR MARS Director.

8. This station, DA1EK, was directed by W2ACS/MM to pass traffic for him. This station, DA1EK, then assumed emergency net control.

9. After many hours of work and long distance phone calls, G3YPK in England confirmed that W2ACS/MM was a legally licensed operator.

10. G3HAS in England notified this station, DA1EK, that he had everything down on tape and would send a copy as soon as possible.

11. Contact was lost with W2ACS/MM at approximately 03:30 GMT, 29 Nov. 75.

12. The above information is true to the best of my knowledge. There were many confusing moments due to the few Amateurs who thought it was a big joke.

13. In the opinion of this station only, DA1EK, I feel that the European Countries Governing Amateur Radio Service and Licensing should monitor and take action against those Amateurs who continually send unauthorized transmissions such as: a) Transmitting music and other commercial signals. b) Emission of unmodulated or unkeyed carrier. e) Require all Amateur stations to have and use a Dummy Load. f) Emission of spurious (SPLATTER) over 3 KCs. g) Establish laws concerning interference with a station who assumes net control with a distress MAYDAY call. h) Stop the gentlemen-type agreements and establish regulations concerning them.

14. All of the above caused confusion and almost panic on the part of W2ACS/MM. This is also the type of thing that the serious Amateur must put up with and look forward to every day.

SFC Frederick W. Woods
WB5NDW/DA1EK/AE1EK
HHC 1st Armored Div.
APO NY 09326

STRANGE

Isn't it strange that the league (ARRL) did not tell me when the Section Communications Manager ballots would be sent to voters in the Illinois section?

Isn't it strange that the current SCM knew well in advance so that he could plan his campaign?

Isn't it strange that I was told that the ballots would not be counted for a couple of weeks after the end of voting, and then was sent the results only 2 days after the voting deadline?

Isn't it strange that my request to the ARRL for finding out how many possible voters there were in that election (not names but a number) was unanswered?

Isn't it strange that many possible voters in the Chicago area (where I live) never received ballots?

Lawrence I. Cotariu WA9MZS
Former SCM Candidate
Skokie IL

be my guest

visiting views from around the world

Keeping Up With the State of the Art: What It's All About

. . . if a man neglects to keep abreast of his time, he yields the right to butter his bread with the milk of the Yak. – E. Haung-Ti

A few years ago, there appeared in *73 Magazine* an article which I ingeniously wrote entitled, "How I Read the Radio Amateur's Handbook and Found Happiness."

For the unlucky few who didn't read this incredibly clever piece of literature, or for those who did and can't remember, I will briefly summarize: First, I artfully described the anguish I suffered from knowing so little about electronics while trying to function in a social order that is at least 99.9% ham. I explained how miserable I was because I couldn't discuss capacitive-reactance with my wife. Then, with uncanny writing skill and insight, I gave both the remedy for my malady, which – in short – was reading the *Handbook* from cover to cover one Thursday night, and the result of my remedy – I could then talk freely about Ohms and Amps like Mac at Mac's Variety.

I have put those years to good use reviewing what I thought I had learned from reading the *Handbook* and have come to the conclusion that my comprehension of the state of the art at that time was not exactly what you would call keen.

Now, after so much time and investigation, I can see how ignorant I was. I can see how foolish I was to have come on so strong with so little ammunition. What a fool you must have thought me. You were right, I was a fool. But I know now where I went wrong. I have learned. For example: I'm embarrassed over the fact that I ordered a few dozen microfarads from the Radio Shack. I realize now that those guys at the Radio Shack were laughing *at* me, not *with* me. I now realize that the dipole I put on my roof needs a rig for it.

Those were bad days!

But like I say, that's all changed now. I've seen the light. I have learned what electronics is all about. Instead of waddling, eyes closed, through the mammoth sea of ignorance, I have courageously peered through the window of knowledge and astutely grasped all the what-once-were-difficult concepts that govern the complex world of electrical phenomena.

It's a thrill to be totally cognizant, to be aware of that broad definitive line that separates knowledge from ignorance, and what's more . . . *to cross it.*

Contrary to what some philosophers might propose, *awareness* is bliss.

I now understand the world of electronics. I have a thorough working knowledge of all its component parts, its idiosyncrasies, its seemingly enigmatic behavior patterns, its wonders. I'm on top of it. Aware. The reason, you see, is that I've read another book.

Well, actually, it wasn't really a book, it was more like a magazine. *Electronics Stuff* or *Build Your Own Electric Things* I think it was called. Whatever its name, it certainly was a wealth of information, a real education.

There was one article in there that described just how to go about building an electric spoon. Another had complete instructions (including the schematic) for constructing a device that detects the whereabouts of pine cones. If I'm not mistaken, I think it was called a "pine-cone detector." Another project – and one that really interested me a lot – was building a multimeter, and I probably would have gone right ahead and built one if it wasn't for the fact that I didn't have any multies in the house at the time and therefore no need to meter them.

But I'm getting away from the subject.

The subject is of course that by reading a *second* electronics book, I have taken one step toward keeping abreast with the state of the art, which I now realize is all important.

What good, when you stop to think about it, is a doctor who, while in doctor school ten years ago, learned a lot about bellies and heads, but hasn't read a single journal or some other kind of doctor book concerning those two vital body parts since? State of the art . . . that's really what it's all about.

Yet, you'd be amazed to find out how many so-called knowledgeable, seemingly competent, well-known champions-in-their-field-type people there are who *haven't* kept up with the state of the art.

Example: Miss Graham, my third grade grammar school teacher, who, I was convinced, knew everything there was to know in the whole world, for one entire school year insisted that "knowledge is power." Obviously, Miss Graham knew nothing about wattage.

Another more amazing example was a man with whom we are all familiar, admired, a man whose ideas helped shape the world into what it is today, a man who was truly a genius, a giant in his field. But a man who made one fantastic error that has gone undetected for decades. Of his oversight, his lack of knowledge and the reason for it, I am now aware. This man, you see, giving him all the respect due him, could not possibly have kept up with the state of the art and still proposed what he proposed.

I'm referring of course (if you haven't already guessed) to none other than Albert Einstein. And the error I'm referring to is this: For a quarter of his lifetime, Albert Einstein, scientist, mathematician, philosopher, suffered under the illusion that voltage . . . get this . . . was equal to mass times the speed of light squared ($E = mc^2$).

WOW, CAN YOU BEAT THAT?

Finding this out was like being ten years old and discovering that Johnny Weismuller couldn't swim. WOW!

How could this be? How could this man in all his wisdom and glory actually believe that? Do you realize that he built his entire relativity theory on that?

The sad fact is, both Einstein and Miss Graham were wrong. They were wrong not because they were stupid – neither was stupid. I didn't know Einstein, but I'd bet a week's pay that *he* wasn't stupid. Yet . . . and yet, they were both wrong. Why?

As I see it, they were wrong for one reason and one reason only, and that is simply that neither Mr. Einstein or Miss Graham kept up with the state of the art. And it's as simple as that. (I've often wondered if Einstein and Miss Graham knew each other.)

Not to belabor the point, but Einstein not only neglected to keep up with the state of the art, but completely ignored the *Handbook*.

So like I say, as you can probably see for yourself by this time, keeping up with the state of the art is all important.

The question now arises, of course, as to how to keep up with the state of the art.

Simple. Collect the two magazines I've read, or if you want to go overboard, maybe even a few more. For the real state of the art freak, there are also correspondence courses, but I figure you've got to be realistic and draw the line somewhere.

No matter how you cut the pie, whether it's two magazines or two thousand magazines, there's a lot of learning to be done. The directions in which modern technology has taken us are pretty hairy to say the least: JFKs, flip flips, AND and ARE gates – who knows where it's all going to end. Not to even mention digital logic, which is a whole other bag of worms.

The road is tough, but to really stay on top, to really know what's happening, to really know what it's about, the road must be followed. To do so is keeping up with the state of the art, or, if you prefer, "buttering your bread with the milk of the Yak." And *that,* my friend, is *really* what it's all about.

Robert W. Johnson
Salem NH

Looking West

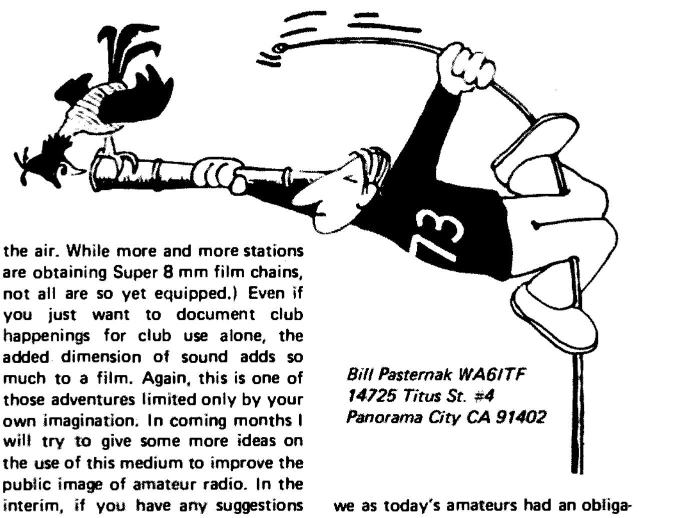

Bill Pasternak WA6ITF
14725 Titus St. #4
Panorama City CA 91402

"Good-Guy, the Gold-Plated Radio" — that's the final title assigned to the latest "epic production" soon to come forth from the Palisades Amateur Radio Club motion picture staff. As regular readers will recall, about a year ago I mentioned that we were documenting on film all the events surrounding the acquisition by PARC of their new MICOR Repeater and Stationmaster Antenna that was to replace the old "A" strips and J-Pole that had served PARC quite well for many a year.

The main reason that I mention this now is due to the many inquiries as to when the film would be available for showing to interested groups in other areas as well as out here. It looks as though late April would be a fair guess, since we have finally gotten into the most important aspect of filmmaking — that of post-production. At the moment, there is about 1800' of Super 8 mm film that must be edited into 28 minutes of story complete with a happy ending. There is also a musical score to add, narration to write, and umpteen other details that I personally know little about. This enormous task is being undertaken by one of the finest professionals in the motion picture industry, George Hively WA6YEA. Those of you who saw "The Longest Yard" in theaters or the TV program "Thrill-seekers" have already seen a sample of George's expertise. Amateur clubs that have seen the first PARC film "Field Day 71" have gotten the chance to see how a true professional like George can build an excellent story from a few hundred feet of assorted home movies. PARC is lucky to have a George Hively as one of its devoted members, but I too am lucky to have a friend such as George who has taken the time and has had the patience to share some of his knowledge with a neophyte filmmaker such as yours truly. Without this beautiful guy, I doubt if I would have had the guts to take on the project of "Good-Guy, the Gold-Plated Radio." Friendship — to me that's the true meaning of amateur radio.

To answer some of the questions that have come in concerning the film, let me give you the following information. Originally, we had hoped to do this film in 16 mm with an optical soundtrack. When I found out what that format would cost, it was decided to revert once again to Super 8 mm. In the meantime, a number of camera manufacturers have introduced a line of Super 8 mm sound-on-film cameras and projectors. Unlike 16 mm, Super 8 mm is a magnetic rather than optical sound system, and the recording technique used is identical to that of any tape recorder. If you have a camera that is capable of recording, film is available that is pre-soundstripped and you can record lip synchronized sound as you take the picture. The other alternative is to shoot silent film and then have the soundstrip added at the time of film processing or after editing, as it will be in our case. We chose the latter method since I already owned two fairly decent Super 8 mm cameras and our sound track (narration plus music) won't be added until after all other post-production work is done. It was just plain more economical that way, since most of the aforementioned 1800' of film will be discarded when we boil it down to 400' of finished product. Therefore, PARC invested in a GAF Super 8 mm Sound Recording Projector rather than a sound camera, as we figured that for us it would be more beneficial. Already, the sound track for "Field Day 71" has been recorded on the film so that lugging a tape deck, amplifier and speaker with us to show it has become a thing of the past. Also, PARC can now mail out this film without providing a detailed instruction sheet as to how to synchronize the sound with the picture, and more important, how to keep them together throughout the film. Having run it many times, I can tell you that it was no easy job. "Field Day 71" is still available from PARC free of charge by sending a letter to the Palisades Amateur Radio Club of Culver City, PO Box 2453, Culver City CA 90230. Please mark the envelope to my attention and use the words "Film Request" on the envelope. Also, please be patient, since there is only one distribution print of this film at this time and there is a waiting list.

What the foregoing leads to is this. In a day when amateur radio must do everything possible to garner good public relations, a relatively inexpensive means to that end is now at hand, thanks to the advent of Super 8 mm sound-on-film photography. For about $450, the price of a synthesized two meter radio, your club can have the basic tools to produce your own films about amateur radio and how your particular organization fits into and serves your community. You have the ability to produce your own public service announcements about amateur radio that can be aired by any TV station equipped to run Super 8 mm magnetic sound film. (I suggest that you first check with your local TV outlets before doing the aforementioned to be sure they have the facilities to put what you produce on the air. While more and more stations are obtaining Super 8 mm film chains, not all are so yet equipped.) Even if you just want to document club happenings for club use alone, the added dimension of sound adds so much to a film. Again, this is one of those adventures limited only by your own imagination. In coming months I will try to give some more ideas on the use of this medium to improve the public image of amateur radio. In the interim, if you have any suggestions along these lines, pass them along to me and I will get them into print for you, here in Looking West.

Were you or better yet your children lucky enough to catch the children's program ISIS on Saturday, November 15th? If you did, then you caught the episode titled "No Trumpets — No Drums," written and produced by Art Nadel W6TZY. The story dealt with the "good people" discovering the hiding place of the "bad people" in a ghost town. Though our "good people" are discovered by the criminals and held semi-captive as the "bad people" prepare to escape, one of our co-heros is an amateur who has a TR-22 in the car. He is able to sneak back to the vehicle, retrieve the radio, make a few quick repairs to it (it was intermittent in an earlier scene), and use it to summon help. In the end, amateur radio and the law will out and the criminals are captured.

Sounds a bit corny you say? Sounds basic and childish? Well, remember it was a program designed to be viewed by children and to both teach and entertain at the same time. In regard to the latter, Art went to great length to carefully yet simply explain what amateur radio was and even how one became a member of our amateur community. He does this by having his lead character, a high school student, explain the difference between amateur radio and other radio services to a teacher that is judging his "Science Fair" type project based on a demonstrating amateur radio. He demonstrates the utility of international Morse Code as one of amateur radio's communication tools a bit later when our high school student has an auto accident and is trapped in his vehicle half way down the side of a hillside. Our amateur/hero taps out SOS on his auto's horn. Luckily, the super heroine of the series, ISIS, comes to his rescue and, using her super powers, saves not only him, but his vehicle as well.

Not long ago, in this very column I stated that I felt it would be today's children that would hold the key to the future of amateur radio, and that we as today's amateurs had an obligation to see that they were educated as to what challenges were offered by becoming amateur radio operators, and had their imaginations stimulated enough to take steps in that direction. If you agree with me, then the work done by Art Nadel W6TZY in "No Trumpets — No Drums" is definitely a giant step in that direction. Therefore, this is my personal and public letter of thanks to him and his staff for one heck of a good job, and I sincerely hope that he and others in the same profession with access to the mass media will continue in that direction. If we can stimulate America's "little people," offer them the imaginative challenge to be found as members of the amateur radio community, then we can insure a bright future.

Another program that will be treating amateur radio in a favorable light will be an upcoming episode of the TV adventure series "Harry O," tentatively titled "Book of Changes." While details are still sketchy on this one, I have been told that we will be treated in a very favorable light and most important, on the side of the "good people." More on this as soon as information and an air date is available.

One thing I would like to suggest. If you decide to write to the networks complimenting them on such programming as this, don't be picky about technical details. Don't write letters telling how much you enjoyed the program and then go into a five page tirade because this was not correct or that didn't seem perfect. Remember, you are dealing with an entertainment media and there are two things to be considered. First, not all TV script writers are licensed amateurs, and in fact, I suspect that very few are. What they know of our hobby they have learned either by accident or through necessity. Maybe one of these people was stuck on a freeway and an amateur stopped to offer assistance, or the guy has a neighbor involved in amateur radio. Either way, in most cases their technical knowledge of amateur radio is usually limited, so let's be thankful for the fact that they are now treating

us as an asset to society rather than a liability.

Also it is important to remember that TV is basically an entertainment vehicle and that what is shown must be easily understood by the general public without their having to run out and locate a copy of the Rules and Regs along with an FCC official to interpret them. If the dialogue sometimes sounds cornball, or if you wish that the QRM level on 20 was as low in real life as it is on the tube, remember you are being entertained along with millions of other people. Most important, TV production companies are beginning to realize the viability of amateur radio and are starting to integrate it more and more in a *positive* way into their programming. Perhaps my dream of having the title "amateur radio" as household words, understood and respected by all, will become a reality yet. At least the seeds have been planted.

Television has two basic jobs in my opinion – that of education as well as entertainment. There are times when it is possible to totally integrate the two, as in the case of Art Nadel's "No Trumpets – No Drums," and there are also times when the educational aspect takes a back seat to the entertainment aspect. Conversely, there are also times and places when entertainment can take a back seat to education, and such is my latest project. I am trying to produce the world's lowest budget educational television program, and if I am lucky I might just pull the whole thing off. I am planning a one hour informal roundtable discussion between amateurs of varied interest backed up by color slides and remote interviews utilizing what I have learned about Super 8 mm sound photography to keep the cost of these "remotes" to a minimum. Thanks to the technical staff of Public Broadcast Station KVST, things are beginning to take shape and a finished vehicle may be ready for airing by late March or early April.

The moderator and guests will all be amateurs, and the purpose of the program will be to explain in simple, non-technical language who we are and what we are all about. We will show amateur radio as a hobby, as an educational tool, as a method of communication in times when no other form of communication exists, and as a therapeutic tool in the recovery of people from serious illness. The whole project started almost a year ago when one of the KVST staff members attended a PARC meeting (the fellow is an amateur) and happened to see the field day film. He asked me about getting it to air on their station, but for reasons beyond our control that was not possible. We did chat, however, about putting together a program about amateur radio and the matter sort of died at that point. I was too busy filming "Good-Guy" and writing to get involved in anything else. Then two events took place. "Good-Guy" was "in the can" ready to be edited by George and I happened to run into Chris WB6HGW, another KVST staff member, at about the same time. My conversation with Chris led to further conversations with others on the subject and out of all this has come "Amateur Radio's Wide Horizon," my tentative title for the program. You may ask what a TV service technician such as yours truly is doing producing a TV program. Well, someone has to do it or it won't get done. For me it is a learning experience as well as doing a bit more to help publicize amateur radio. Whether it will ever get aired I cannot be sure at this time, but if it does, it will probably be the first program of its length done for about $99.95 or so. Talk about low budget...

About two weeks ago, the formative meeting of the Southern California Amateur Radio Public Relations Committee was held to get the ball rolling toward obtaining some good "PR" for our amateur radio community. Chaired by Lenore Kingston Jensen W6NAZ, the 40 or so of us that attended the meeting spent about three hours discussing the many various ways that we could obtain media coverage for our many varied activities, and more important, what form of media coverage was best suited to a given event. In forthcoming issues, I will go deeper into some of these, but for the present let me just cover the major accomplishments of the evening. First, it was decided that we would produce and distribute a simple PSA (public service announcement) that would briefly explain what amateur radio is and provide a telephone number and addresses where more information could be obtained. Something simple and inexpensive like a few color slides with about 30 seconds of copy to be read by an announcer or put on a tape cartridge. Inexpensive but effective.

Next, a Public Relations Net was formed that now meets through the facilities of the WR6ABN repeater system (147.82/.24) every Thursday evening at 7:30 pm local Pacific time. Its purpose is to take inputs on newsworthy amateur radio events and channel them through Lenore to the proper media sources for dissemination to the general public. It is urged that *every* radio club and repeater organization in Southern California appoint a public relations spokesperson to this committee and have that person check into this net hosted by Burt WA6MQV. A low-band net on 75 or 40 is also being discussed so that those people outside the coverage area of WR6ABN can also take part in this truly worthwhile program.

If your group happens to fall into the latter group (that which is not within the coverage area of the WR6ABN repeater system) and you wish to take part in this ongoing public relations program, a program that may well help insure the future of our amateur radio community, then drop a line to Lenore (she is listed in the callbook) or to yours truly and I will channel such letters to Lenore. Next month, I will continue with what I promised for this month; the Ventura Convention and the SCRA meeting wrap-up as well as more on what began here in the field of amateur radio public relations about two weeks ago.

In the interim, if you in other parts of the nation want to get started in the same direction that we are taking here, I will be happy to share what knowledge I have garnered with you either through personal communication, or if it keeps growing, through a series of articles apart from Looking West. It's up to you. I will write them if you will provide the inputs. True, we have made a great beginning, but there is yet a long road to travel. Working together both locally and nationally we can achieve that goal. We can achieve public recognition, and more important, public respect. It simply takes each of us doing his or her share. I believe we can.

NEW PRODUCTS

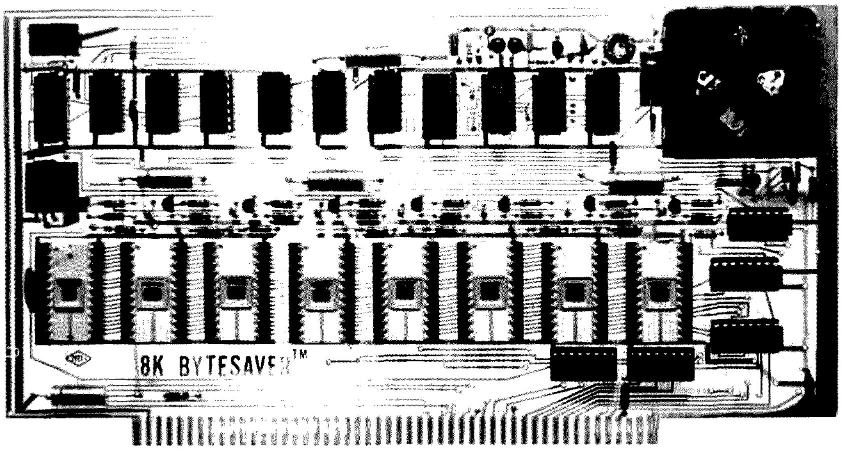

BYTESAVERtm

Cromemco of Los Altos, California has a nice gadget for use in the Altair 8800 computer . . . it's an 8K PROM board designed to plug right into the Altair and it has a built-in programmer for the PROMs.

This is an excellent way to keep, say, the 8K BASIC program right on tap for the Altair, ready to use immediately when the computer is turned on. After a few dozen times of hand switching in the 19 step loader and then playing the five minute cassette loader for BASIC, you'll be ready for a ROM memory for the works.

In addition to making the start up of the Altair duck soup (to coin a phrase), there is a little matter of keeping the program in good shape. Little glitches in the power line come along and knock out some of the RAM memory now and then, introducing errors into the program with the result that in ordinary operation you have to refresh the program every now and then by starting over and running it in from tape. With the program in ROM it won't deteriorate.

Then, one other factor, the cost of the memory alone. The Bytesavertm costs $195 in kit form vs. twice that for the Altair 8K in dynamic RAM.

Cromemco, 1 First St, Los Altos CA 94022, if you want more details.

Autobiography of an Ancient Aviator

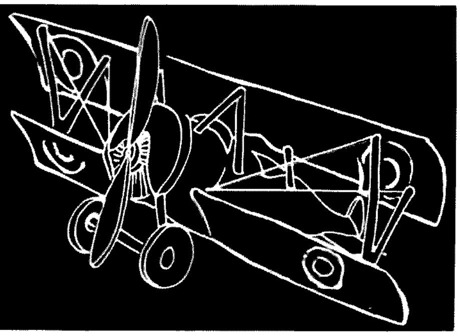

W. Sanger Green
1379 E. 15 Street
Brooklyn NY 11230

HOTEL RANGES AND A REAL CLOSE ONE

I had just returned to Brooklyn from a six month Air Service active duty tour at Langley Field, Va., so the first thing on my calendar was to get a job. I could go back to selling Hupmobiles but that was a dead end street. My father-in-law told me that the Michigan Stove Company of Detroit was looking for a man to handle their hotel and restaurant kitchen range business (wholesale) in south New Jersey, Pennsylvania, Delaware, Maryland and D.C., with headquarters and warehouse at Philadelphia. So I phoned, made an appointment, and went to Detroit to see about the job, since nothing worthwhile was doing in the aviation business. They offered me the position with a good salary and liberal traveling allowances, and I accepted. The next ten days were spent at the factory familiarizing myself with the various products I would be handling, getting all the information I could about the firms and people I would be dealing with in the territory, and all available information about our one competitor and its products.

It took me awhile to get acquainted with the hotel supply house and gas company salesmen as well as the chief chefs in the larger hotels and restaurants. Regular calls on these and A & E firms doing plans and specifications for new hotels in my territory produced a good flow of business. Detroit was happy.

One very lucky experience comes to mind. I was just finishing breakfast one morning in Atlantic City when the fire sirens sounded. I walked up the boardwalk to see where the fire was. It happened to be in the rear of one of the larger hotels in town — right where their kitchens were located. The fire was brought under control very quickly but it had gutted both the American plan and European plan kitchens. I knew the head chef so I found him and told him that I had all the equipment to put him back in business at my Philadelphia warehouse and could have it shipped out that afternoon. Then, with the gas company's help, I could start installation as soon as he could get the debris cleaned out. I got the Atlantic City Gas Company representative over and he, the chef, and I made up the new kitchen layouts. The old equipment had been in use for about 12 years so the hotel manager thought this was a good time to install new ranges, etc.

> **Ralph claimed to be the only man to bite himself in the behind . . .**

(fire insurance, you know). Anyway, the gas company got its order, I got my order from them, and had the ranges on their way that afternoon. The importance of the order can be gauged by the fact that the gas company man (a noted tightwad), who worked on a salary plus commission, took me to Hartney's that evening for a lobster dinner. Detroit also came along with a nice raise.

One of the trips I made for the stove company was to Dayton, Ohio. Several of my Kelly Field classmates were stationed at McCook Field, near Dayton, so we got together for a reunion. They brought along Ralph Lockwood, who was chief test pilot at McCook. Ralph claimed to be the only man to bite himself in the behind. He said it came about like this: He had false teeth that didn't fit very well so when he was getting ready to take off for a test flight he would put them in his rear pants pocket. This day he parked his teeth, put on his parachute and took off. About 1000 feet over the field the engine blew up, taking a lot of the front end of the ship with it. So Ralph bailed out. When he hit, it was at a pretty good clip. He landed on his gluteus maximus with his false teeth making his only wound. He swears that's what happened.

In 1927 I was on active duty at Mitchel Field, L.I., the last two weeks in July. On my way home from Mitchel I stopped by at Curtiss Field to visit some of my friends there. While we were talking, Casey Jones came over and said he had a photo mission over Manhattan and would I like to take it. I said I'd be glad to help out so they rolled out an old C-6 Standard, put the photographer and his cameras in the front cockpit and away we went. We were only a few minutes out of Curtiss and over New Hyde Park when there was a fair-sized explosion up front, no more power and the ship became quite tail heavy. Then I saw that we had a pretty good fire going up forward where the six cylinder engine block had been. The gas tank in this ship was in the center section over my passenger. There was a petcock in the gas line from the gas tank to the engine and I tried to get the passenger to turn it off and stop feeding gasoline to the fire. The fellow was too scared to move, so, as the flames blowing back were getting pretty hot, I had to side slip to keep them away from the fuselage. There was not much choice as to landing place, so I slipped to within a few feet of the ground and landed in a small potato patch. By that time the right wing was burning briskly, so I hauled the photographer and his cameras out of the front cockpit just before the gas tank exploded. A water pumping station was nearby so I borrowed their phone to advise Curtiss Field of the good news: one Standard they wouldn't have to scrap. Ed Conerton came over to pick us up. When we got back to Curtiss, I offered to take the young man on his mission in another ship but he was too badly shaken. So Ed and I retired to a nearby speakeasy to freshen up a bit. I later learned that the C-6 engine block that left me without warning landed in a service station in New Hyde Park but did no damage — just scared them.

A few days after this I received a wire from Lockwood, who had joined the newly-formed Aeronautics Branch of the Department of Commerce, asking me to come to Washington to talk about joining them. The next week I went down to see what was going on.

In 1926 Congress passed the Civil Aeronautics Act, under which was established an Aeronautics Branch in the Department of Commerce. Its function was to exercise a certain amount of control over civil aviation by means of licensing pilots, mechanics, aircraft and engines. William P. McCracken was appointed Assistant Secretary of Commerce for Aeronautics, and Clarence M. Young, Director of Aeronautics. With the help of Gil Budwig, Dan Scarritt and Ralph Lockwood, they were in the process of recruiting a group of qualified inspectors to do the examining and testing for the licenses.

They offered me the job as supervising inspector of their no. 2 region, which consisted of south N.J., Penna., Del., Md., Va., W.Va., N.C., and D.C. The salary was less than I was getting with the stove company, but the job was important in aviation and I figured it would put me in contact with some of the top people in the business. While I was there I got my transport pilot license (#73) and also an aircraft and engine mechanic license. I agreed to start work for them on November 1. That meant moving my family (Cleo and Wayne) to Philadelphia, where my headquarters would be.

Next month I'll tell you about my 15 months as a Supervising Inspector during the aircraft engine transition period from 0X5s to the new radial engines. Hold on.

HAM HELP

I can offer "Ham Help."

Donald A. Huettl WB0MBY
11349-6th St. NE
Blaine MN 55434

I have written you before about how difficult I and others like myself who have not had an electronic background have found it to get help to become a ham. Your tapes have been very helpful to me. In fact, I took my Novice exam Wednesday, given to me by Al Cook WA1RIT (hope I passed).

Help by hams is hard to find, almost as hard as finding hens' teeth. Thanks to Bill Loeffler W1PFA, owner of Camercraft of Lawrence, Mass., Bill Longworth WA1HWE, John Scofford WA1OAQ, and all others who organized amateur radio classes at Salem H.S. This class consists of males and females, young, middle aged and older folks. This class started with about 60 and still has over 50 attending. I will try to send a picture of the class when the class is graduated.

Keep up your help column and list other hams' names who really want to give help.

I'm hoping the FCC will soften the theory part of the exam, but I believe the code should be required and ten (10) wpm should be required on all exams.

Basil W. Polinchak Sr.
Andover MA

CONTESTS

Editor:
Robert Baker WA1SCX
34 White Pine Drive
Littleton MA 01460

Please be sure to send all contest information to WA1SCX at least 3 months prior to the event's date, so that we can be sure to get it included before the publication deadline.

ARRL NOVICE ROUNDUP
Starts: 0001 GMT Saturday, February 7
Ends: 2369 GMT Sunday, February 15

The contest is open to all amateurs in any ARRL section. Operating time must not exceed 30 hours total during the 9 day period while off periods may not be less than 15 minutes at a time. Times on and off must be entered in your log. Crossband contacts are not allowed. Novices may work anyone while non-Novices must work Novices only. Each station may be worked only once regardless of band.

EXCHANGE:
RST and ARRL Section.

SCORING:
Each completed QSO counts one point. The total multiplier is the number of ARRL sections and foreign countries worked. VE8 counts as a separate section. The final score is the number of QSO points plus your ARRL Code Proficiency credit (15 wpm = 15 pts.) times the total multiplier.

AWARDS:
Certificates will be awarded to the highest scoring Novice in each ARRL section. Multi-operator or higher class licensees are not eligible for awards but the top ten scores will be listed in the results.

LOGS:
Use official ARRL forms available from: ARRL, 225 Main St., Newington CT 06111. All entries should be sent to this same address.

Please check the January 1976 issue of QST *for any last minute changes in rules or operating times.*

YL-OM CONTEST
PHONE
Starts: 1800 GMT Saturday, February 21
Ends: 1800 GMT Sunday, February 22
CW
Starts: 1800 GMT Saturday, March 6
Ends: 1800 GMT Sunday, March 7

Sponsored by the YLRL, the contest is open to all licensed operators throughout the world. All bands may be used but crossband operation and net contacts are not permitted. Phone and CW contacts will be scored as separate contests, so please submit separate logs. A station may be contacted no more than once in each contest for credit.

EXCHANGE:
QSO number, RS(T), and ARRL section or country.

SCORING:
One point is earned for each station worked, YL to OM or OM to YL. Multiply the number of contacts by the number of different ARRL sections and/or countries worked. Contestants running 150 Watts input or less on CW and 300 Watts PEP or less on Phone may multiply the score by 1.25 (low power mult).

LOGS:
Entries in your logs must show band worked at time of contact, time and date, and transmitting power. Copies of all logs showing claimed scores and signed by the operator must be postmarked no later than March 24, 1976 and received by the contest manager not later than April 18, 1976 or they will be disqualified. Please remember to submit separate logs for Phone and CW. Send logs to: YLRL Vice President, Beth Newlin WA7FFG, 826 W. Prince Rd – 06, Tucson AZ 85705.

AWARDS:
A cup will be awarded to the first place YL and OM on both Phone and CW. Second and third place winners in each contest will receive certificates. Certificates will also be awarded to the high score Phone and CW winners of each state, VE call area, and each country. The winner of the Phone contest cup is also eligible to win the CW cup.

Be sure your logs are legible; no logs will be returned.

SOUTH DAKOTA STATE QSO PARTY
Starts: 1400 GMT Sunday, March 14
Ends: 0200 GMT Monday, March 15

The contest is sponsored by the Prairie Dog Amateur Radio Club. No South Dakota to South Dakota contacts will count. Same station may be worked on different bands or modes or in different counties for multipliers.

EXCHANGE:
SD stations give RS(T) and county, all others will send RS(T) and state, province or country.

SCORING:
For SD stations, final score is number of contacts times the number of states, provinces or countries. All other stations, final score is the number of contacts times the number of counties (67 max).

FREQUENCIES:
CW – 70 kHz up from bottom of band; Novice – middle of Novice band; Phone – 1.975, 3.955, 7.230, 14.280, 21.370, 28.510.

AWARDS:
Certificate to highest single and multi-operator entry in each section.

ENTRIES:
Send signed declaration and claimed score to: WBØEVQ, Box 493, Springfield SD 57062, by April 30, 1976.

CQ WORLDWIDE WPX SSB CONTEST
Starts: 0000 GMT Saturday, March 27
Ends: 2400 GMT Sunday, March 28

Only 30 hours of the 48 hour contest period permitted for single operator stations. The 18 hours off may be taken in up to 5 periods during the contest, but must be clearly indicated in the log. Multi-operator stations may operate the entire 48 hours. All bands, 1.8 to 28 MHz may be used but all QSOs must be 2xSSB only.

ENTRY CLASSES:
Single operator, all band or single band; multi-operator (all band only), single or multi-transmitter; multi-operator, multi-transmitter only allowed one signal per band.

EXCHANGE:
RS and 3 digit progressive QSO number starting at 001, use 4 digit number over 1000; multi-transmitter stations use separate numbers for each band.

POINTS:
QSOs with stations on different continent – 3 points on 14 to 28 MHz, 6 points on 7 to 1.8 MHz. Contacts between North American countries (not your own) count 2 points on 14 to 28 MHz, 4 points on 1.8 to 7 MHz. Contacts between stations in the same continent but not in same country count 1 point on 14 to 28 MHz, 2 points on 1.8 to 7 MHz. Contacts between stations in the same country count only for multipliers, not for QSO points.

MULTIPLIER:
The multiplier is the total number of different prefixes worked regardless of band. Each prefix may be counted only once. Each special bicentennial USA prefix worked counts as a multiplier of 2.

SCORING:
Single op, all band and multi-operated stations – total number of QSO points from all bands times the total multiplier. Single op, single band – total number of QSO points from that band times the multiplier. NOTE: A station may be worked once on each band for QSO points, but the prefix multiplier is only counted once.

AWARDS:
Certificates will be awarded in each category in each country, and each call area in US, Canada and Australia. Other special awards and trophies will be awarded as listed in *CQ Magazine*. To be eligible for awards, single oper-

CALENDAR

Feb 7 - 15	ARRL Novice Roundup
Feb 14 - 15	10-10 Winter QSO Party
Feb 21 - 22*	ARRL DX Contest – CW
Feb 21 - 22	YL-OM Contest – Phone
Feb 28 - 29*	French Contest – Phone
Mar 6 - 7*	ARRL DX Contest – Phone
Mar 6 - 7	YL-OM Contest – CW
Mar 13 - 14	BERU
Mar 14 - 15	South Dakota QSO Party
Mar 20 - 21*	ARRL DX Contest – CW
Mar 27 - 28	Tennessee QSO Party
Mar 27 - 28	CQ World Wide WPX Contest – SSB
Mar 27 - 29	BARTG Spring RTTY Contest
Apr 3 - 4	Florida QSO Party
Apr 3 - 4	CD Party – CW
Apr 3 - 4	SP DX Contest
Apr 10 - 11	CD Party – Phone
Apr 24 - 25	PACC
Apr 24 - 25	Delta QSO Party
May 1 - 2	Helvetia 22 Contest (H22)
June 4 - 7	IARS/CHC/FHC/HTH QSO Party
June 12 - 13	ARRL VHF QSO Party
June 26 - 27	ARRL Field Day
July 3 - 4	QRP – Summer – Contest
Aug 14 - 15	European DX Contest – CW
Sept - 12	European DX Contest – Phone
Oct 30 - 31	CQ World Wide DX Contest – Phone
Nov 5 - 8	IARS/CHC/FHC/HTH QSO Party
Nov 13 - 14	European DX Contest – RTTY
Nov 14	OK DX Contest
Nov 27 - 28	CQ World Wide DX Contest – CW

* = described in last issue

ator stations must work a minimum of 12 hours; multi-operator stations must work a minimum of 24 hours.

LOGS:

Show all times in GMT, use a separate sheet for each band. Prefix multipliers should be entered only the first time they are contacted. Logs should be checked for duplicate QSOs and prefix multipliers. It is recommended that you use a prefix check sheet and include it with your entry. Each entry must be accompanied by a summary sheet listing all scoring information, category, and your name and mailing address in block letters. Also, a signed declaration that all contest rules and regulations for amateur radio in your country have been observed should be included. Official logs and summary sheets are available from *CQ Magazine*. Send a large self-addressed envelope with sufficient return postage or IRCs to: CQ WW WPX SSB Contest Committee, 14 Vandeventer Avenue, Port Washington, LI, NY 11050. All entries should be postmarked no later than May 1, 1976 and addressed to the address shown above. The deadlines will be made more flexible in rare isolated areas.

Please check the January issue of CQ Magazine *for complete rules and changes made at the last minute.*

TENNESSEE QSO PARTY
PERIODS:
2100 GMT Saturday,
March 27 to
0500 GMT Sunday,
March 28; 1400 GMT to
2200 GMT Sunday,
March 28

Tennessee stations on Phone, call "CQ TENN QSO PARTY," or on CW call "CQ TN." Test variations to encourage contacts from non-contestants will result in disqualification. Repeater contacts are not allowed. Mobiles compete against mobiles, portables against other portables. Minimum of 5 contacts from each county for mobiles and portables to earn bonus points.

EXCHANGE:

Tennessee stations send signal report and county. Out of state stations will send signal report and state, province or country. Each station may be worked twice on each band, once on CW and once on Phone. Mobile and portable stations may be worked each time in a different county.

SCORING:

Score one point for each Phone QSO and 1.5 points for each CW QSO. Tennessee stations multiply total number of QSO points times the sum of different states, provinces, and Tenn counties – include Tenn as a state also. Portable and mobile stations receive 200 extra bonus points for each county outside their home county they operate from. This bonus is added to their total score after using the multiplier. Out of state stations, multiply the total QSO points by the total number of Tenn counties worked.

FREQUENCIES:

3550, 7050, 14050, 21050, 28050, 3725, 7125, 21125, 28125, 3980, 7280, 14280, 21380, 28580

LOGS:

Logs must show: date/time in GMT, station worked, band, mode, exchange and score. Use separate logs sheets for each band over 25 contacts made on. Submit cross check sheet if you make over 100 contacts. Logs must be legible to avoid disqualification. Mailing deadline is April 25, 1976. Include a self-addressed stamped envelope if eligible for certificates; every entry will receive a summary of the QSO party with a certificate if eligible. Send logs to: Dave Goggio W4OGG, 1419 Favell Dr., Memphis TN 38116.

AWARDS:

Plaques will be awarded to the top score in and outside of Tennessee and to the winning portable and mobile. Certificates will be given to every station sending in a log with 10 contacts or more.

DEHC

Enclosed is some information about Ecuador's new Diploma for Amateurs and SWLs. Please let your readers know about it in your magazine.

Diploma De La Linea Ecuatorial (DEHC). This FB DIPLOMA is available to stns making required contacts with stns in HC-ECUADOR, the land of, and named after the EQUATORIAL LINE. AF, AS, EU, OCE ... 1 QSO. Any Novice ... 1 QSO. N.Am., C.Am ... 2 QSOs. S.Am ... 3 QSOs. Any band, mode. Ok for SWLs. QSOs from 15 Nov 1945 count. To apply send: List of QSOs, 1 dollar U.S. or equivalent, or 8 IRCs to:

DEHC Mgr. R. Dorsch HC5EE
PO Box 253
Cuenca, Ecuador

BARTG SPRING RTTY CONTEST
Starts: 0200 GMT Saturday,
March 27
Ends: 0200 GMT Monday,
March 29

Only 30 hours of the total 48 hour contest period may be operated. The 18 hour rest period can be taken at any time, but off periods may not be less than 3 hours at a time. Times on and off the air must be summarized on the log and score sheets. There will be separate categories for multi-operator and SWLs. Use all amateur bands from 3.5 to 28 MHz. Stations may not be contacted more than once on any one band. In addition to the ARRL country list, each W/K and VE/VO call area will be counted as a separate country.

EXCHANGE:

Time in GMT, must be a full 4 figure group – use of "same" or "same as yours" will not be permitted. RST and message number. Message number must consist of a 3 figure group starting with 001 for the first contact.

POINTS:

All 2-way RTTY contacts with stations within one's own country will count 2 points. All 2-way RTTY contacts with stations outside one's own country will count 10 points. All stations will receive a bonus of 200 points per country worked including their own. NOTE: Any one country may be counted again if worked on another band, but continents are counted only once.

SCORING:

The total score is the sum of (the 2-way exchange points times the number of countries worked) plus (the number of countries worked times the country bonus points times the number of continents).

LOGS & SCORE SHEETS:

Use one log sheet for each band and indicate any rest periods. Logs must contain: date and time in GMT, callsign of station worked, RST report and message number sent, RST report and message number received, and exchange points claimed. All logs must be received by May 31, 1976 to qualify. The judges' decision will be final. Send contest logs to: Ted Double G8CDW, 89 Linden Gardens, Enfield, Middlesex, England EN1 4DX.

AWARDS:

Certificates will be awarded to the leading stations in each class and to the top stations in each continent and each W/K VE/VO call area. The final positions in the Results Table will be valid for entry in the "World Champion of RTTY" Championship.

If any contestant contacts 25 or more different countries (W/K VE/VO call areas do not count as separate countries for award) on 2-way RTTY during this contest, a claim may be made for the QUARTER CENTURY AWARD issued by the British Amateur Radio Teleprinter Group and for which a charge of $2.00 or 8 IRCs is made. Make your claim at the same time as you send in a contest log. Holders of existing QCA Awards will automatically have any new additional countries added to their records.

If any contestant contacts stations on 2-way RTTY with all six continents and the BARTG Contest Manager receives contest logs from the operators in those six continents, a claim may be made for the WAC Award issued by the RTTY Journal. The necessary information will be sent on to the RTTY Journal who will issue the WAC Award free of charge.

RESULTS

RESULTS OF THE 1976 PACC CONTEST, sponsored by VERON of Nederland

This list shows the first place winners in each country/call area where certificates were awarded. An asterisk next to a score indicates a multi-operator entry.

DL1OY	1155 points	W2EQK	1023 points
DM4ZXH	2331	WB4OGW	510
DM4JA	462*	W3ARK	240
EA5BS	4524	VE3EJK	162
G3ESF	4284	CQ7IZ	990
GM3KLA	5628	ZS6CS	3180
GW4DOO	540	UM8FM	336
HA5BP	5589	UL7GAA	90
I3BLF	1998	UH8BO	975
LZ1GX	9384	UD6BW	720
LZ2KSB	6885*	UK9YAR	600*
OH2LU	6231	UA9CBM	741
OK30KAG	5208	9H4G	90
OK30KFF	7227*	YU3DXU	510
OZ6DT	1080	YO4ASG	1155
SM7AIL	1728	UR2QD	4368
SP3IGB	570	UK2GAN	1890*
SQ1KKO	1581*	UQ2NU	90
UW6MP	2451	UK2PAF	9702*
UK3ABB	8370*	UP2OU	5265
UK2FAM	3312	UK5QBE	5913*
UB5ZAT	4104		

RESULTS OF THE 1975 BARTG VHF RTTY CONTEST

The top three positions in last year's VHF RTTY contest were obtained by:

1st	DC3OZ	82 points	12 QSO's	352 Km. longest QSO
2nd	DC8AM	67	13	297
3rd	DB1PA/P	65	9	291

There was a total of 21 entries with all contacts being made on 144 MHz.

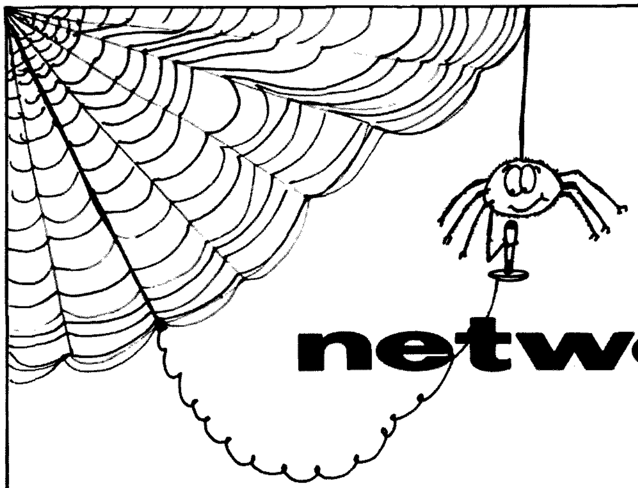

E.H. Barnett WBØIIX
Route 1
Ashland, Missouri 65010

networks

NOTE: Times and Days are given in GMT.

NET TYPE

I – Information
R – Rag Chew
S – Service
T – Traffic

Area	*Net Type*	*Name*	*Time*	*Days*	*Freq*
NATIONAL					
Canada	T	Trans-Canada Net	1800	Sat	14130
US	I	Mutual UFO Net	1800	Sun	14284
REGIONAL					
Mid US	T	Neb 160 Meter Wx Net	0130	Daily	1995
New Eng	T	New England Barnyard Net	1200	M-S	3960
East US	I	Mutual UFO Net	1200	Sat	7220
Mid US	I	Mutual UFO Net	1300	Sat	3975
Mid US	I	Mutual UFO Net	1400	Sat	7228
Gulf Coast	I	West Gulf Hurricane Net	1605	Tu	7268
STATEWIDE					
GA	T	Georgia SSB Net	0000	Daily	3975
CT	S	Connecticut Net	0200	Daily	3640
IL	T	Central IL Net	1315	Sun	1815
SC, NC	S	Carolinas Net	2200	Daily	3573
GA	T	Georgia Training Net	2200	Daily	3718
CT	S	Connecticut Net	2300	Daily	3640

My thanks to WA5RON for contributing this month. Does anyone know about a NASA Net? Keep those cards and letters coming.

Nets Worth Checking Into:

Mutual UFO Net. This net is for reporting and discussing unexplained phenomena. If you are a UFO buff check it out.

From page 4

letting off some steam. You could do worse things with your time.

MORE HELP NEEDED

Though we have a staff of 28 working on *73 Magazine*, we need one or two more and we need them badly. Our publishing of new books has been much slower than we've liked because we just don't have enough technical people to work on them. And our testing and work with microcomputers has been very slow since none of us know anywhere near as much as we should about them. We know they are going to be very big before long, but we need help to keep up with them.

If you have a good background in hamming . . . have worked with slow scan, RTTY, DXed a bit, built a lot, maybe written some articles . . . you might be missing a good bet for a place to work. If you have been playing with microcomputers, have built some of the interfaces, done programming in two or three languages, are able to explain to the average ham the difference between an assembler and a compiler, and have some articles to your credit, you could do worse than write to *73*.

73 is by far the most informal of all the hamrags to work for. We don't get as much work done at times, but we have a lot of fun . . . and there just isn't a better place to live in the whole country if you like relatively mild winters and summers, like to ski, camp, hike or things like that. New Hampshire is still a rare state for hamming and the mountains are fantastic for repeaters and UHF work. Peterborough is not far out of Boston, yet it is a country village nestled among the mountains, with three ski areas within a fifteen minute drive.

If you enjoy hamming, we're set up with a superb DX station on 20m, a fair Oscar 7 mode B setup, and all kinds of ham gear coming and going . . . RTTY, SSTV, FM, uP, you name it. The pay is geared to single people, not families.

Write.

HEATH BITES BITTER BULLET

As I understand the situation, Heath has recalled all of the HW-2026 synthesized transceivers. This is a move without precedent in the amateur field, to my memory.

The move could easily cost Heath well over half a million dollars, which is a very big number in the ham field. The rig sold for $289.95 in kit form (see page 100 of the January *73* Heath catalog) and Heath is offering to refund the original payment plus $25 if the kit has been partially assembled and $50 if it has been completed.

The problem was one that came as a surprise. It seems that there are some spurs coming out of the synthesizer which could in some areas of the country cause problems to other services . . . and this is on receive as well as transmit. Since the receiver was tested and okayed under Part 15 for such radiation the problem must be a very low level of spurious radiation. Extensive tests in the Michigan area by Heath amateurs turned up no problems, but difficulties began to arise when the units were put on the air in rf-congested areas such as New York City.

The first reaction, naturally, was to see what modification could be devised to cure the spurs. It turned out to be such a difficult mod due to the microparts involved that the half million dollar decision was made.

Bravo Heath!

In view of this situation, which has cropped up several times . . . I believe it was an amateur FM rig that brought on the FCC demand for all receivers to be put through Part 15 spurious emission tests . . . and with the problems encountered by at least two other synthesized rigs, it might be prudent for manufacturers to get prototypes checked out in a couple of major urban areas before releasing production runs in quantity. If manufacturers have any problem finding volunteers from among the field of waving hands I'll be much surprised.

by
J. K. Bach
Ivy Hill Road
Walden NY 12586

Adventure

For a time, all the solid state surplusers were featuring returned or defective calculators that you could repair, with the instructions furnished. Some of the offers were absurd; the best I found was from Meshna, who offered an ac desk calculator for ten dollars, and a dc version for eleven. They were eight digit, and basic, without any radicals, reciprocals, factorials or suchlike. Also, they used a liquid crystal display, which intrigued me. An instruction manual and a magazine reprint went with the deal. I ordered the ac model, with the dc as a substitute if it was out of stock. I got the dc version.

Anyone who goes for a deal like this just to save money is a hopeless romantic – or, at least, hopeless. Either you realize all the other benefits, or you are left holding the bag. I suppose that if you really failed to get the calculator working, Meshna would take it back – he's reliable – but eleven dollar junk is expensive, and an eleven dollar basic desk calculator, plus experience, is a bargain.

In due time I got my calculator, obviously brand new, all done up in a plastic bag. I opened it up and studied both the reprint – which was a discussion on repairing calculators, quite general – and the manual, which was an extract of the original, but with some omissions.

After studying this, I did what 90% of surplus buyers do – I got second thoughts and put it away for about three weeks. What was *I* doing with a busted calculator? If the manufacturer gave up, who was I to second-guess him? The fact that I have been troubleshooting all my life, some of it even digital stuff, made no difference. I felt like a fool.

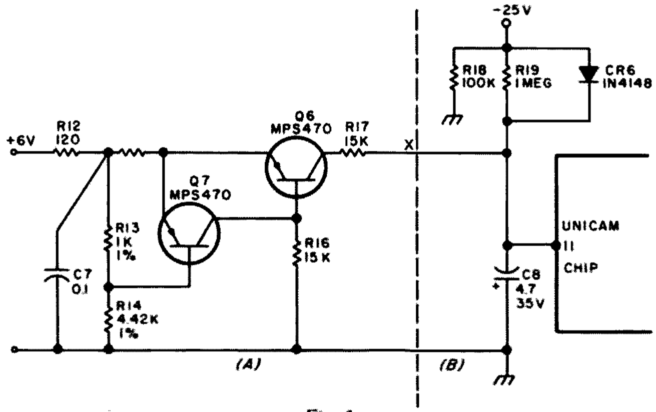

Fig. 1.

But this was clearly unproductive, and I got curious. I had to get a couple of Phillips screwdrivers, too, but I got her open. I saw two halves of a box, with a keyboard and circuit board in the top half, and the plastic light guide, bulb, and battery box in the other. Not much help. I put it together again, installed four D cells, slid the battery cover on, set the box right side up, and hit the "on" latch. The shade popped up, allowing the leaf switch to close, turning on the bulb, and I got light, but that was all. No numbers. Obviously the inverter, which I had read about, wasn't working. I knew you had to work the liquid crystal display on high voltage (comparatively) ac.

The moment of truth. Well, no use stretching it into an hour. I took the case apart again, but this time removed the circuit board and inverted it. My, my! Three big ICs; most of them look like dead cockroaches, but these, exceptionally flat, looked like millipedes. Two rows of legs on each side, an inner and an outer. And the display sticking up out of its connector. If you look closely, you can see the 8s all in a row, in transparent metal.

The rest is the usual peppering of electrolytics and plastic caps and resistors and transistors like canary-bird excrescences with a flat side, all the same size. And, oh yes! – a plastic spool of wire, must be L1.

And there it is. The spool is loose, vibrates a little. I pulled it away from the board, only the outer lead connected. The inner one was broken off. It had to be the inner one – Murphy's Law. All that agonizing and timidity and rationalization and I found the trouble without instruments, just by visual inspection, in 90 seconds! A good carpenter might have taken a minute and a half to find it.

It would not surprise me if each and every unit shipped had exactly the same trouble. In the first place, there is obviously some agreement with the manufacturer to keep the name confidential. It may be part of the deal to insert a defect, to justify the price. The price has to be justified to the buyer also. But the Post Office inspectors come around and maybe Ralph Nader, so instead of something the customer has to find with a triggered oscilloscope, a perfectly good unit with a deliberately broken inductor lead might be the best answer to the whole business. Now all this is my own idea – don't go asking the dealer about it. I could be wrong. But I'm pretty sure you won't get anything through the US mails that you can't fix pretty easily.

The inner conductor of L1? That's simple enough. I took a modeler's knife (they're sharp) and carved away part of the inner bottom edge of the plastic spool, and pulled out an eighth turn or so, and cleaned it. To fit, I needed a longer outer lead, so I unwound and retaped enough. Far less than half a turn all told, and no splices. I cleaned out the solder holes with a round toothpick and mounted the coil by them. Fixed.

Now when I turned it on, I got half a second of all 8s, then 0. The flyback converter was certainly working. The keyboard is like an organ with its long throw and light keys that seem to do nothing, but they do provide tactile feedback and I like them a lot better than those mushy things. The input is algebraic and serial, but nonrepetitive. By accident I found that zero will clear under some conditions, though the C key should be used for this, of course.

Every calculator, even my little Novus 600 which has been roundly – and I think unjustly – criticized, has some particular talent, something it is particularly good at. It didn't take long to find the virtue in this one: It likes decimals. I would never again buy a six-digit calculator, but that is the only limitation I recognize in the Novus. This one has eight digits, which is one hundred times bigger, and I must say I haven't run out of numbers on it yet.

You can do nearly anything on a basic calculator that you can do on the newer fancier ones, which have keys for %, X^2, $\sqrt{X}$, X!, 1/X and such. It just takes longer – you have to work the gimmick as a separate problem and insert the answer as a factor. To take a reciprocal of 1.414 on the Novus, I can't just divide it into 1. It gives me a zero and sneers at me – I haven't left it enough room. So I have to enter 100 000 and divide that by 141, sorting out the decimals mentally. But this box – stick in a 1, divide 1.414 = 0.7072135 no strain. The liquid crystal display is odd – for one thing, it's bland, white, like cigarette smoke in a bottle. It's slow – you can see it go on and off, unlike the LED type. The driving circuit must look like wallpaper; you can't multiplex this type. The display has more leads going to it than you ever saw, like cattails in a swamp. Were I building one, I should never specify a liquid crystal – either LED or flourescent tube. But now I have this one, I like it, and its slowness doesn't bother me. It is by no means a limitation. For variety I may later dye the bulb with modeler's colored lacquer. You can get it in tiny 25¢ bottles.

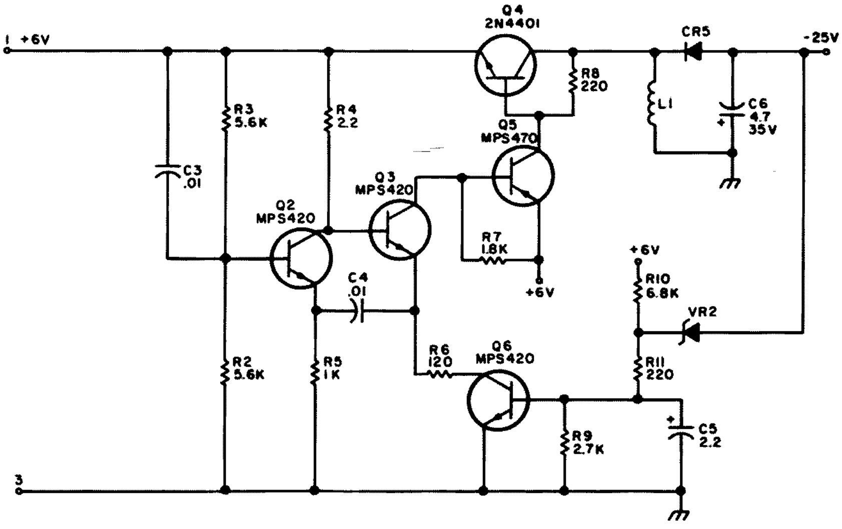

Fig. 2.

Now a "wild" trouble came in. The calculator still worked, but it didn't show "all 8s" when first turned on (see Fig. 1). I lifted off R17 to disable the low voltage cutoff (A) and checked out C8 with my VOM. I got a kick. Next I replaced R19 with another one meg without results.

I looked up the circuit in the manual and like Rumpelstiltskin, in the fairy story, you'd never guess his name. He is called a power-on-initialization circuit! Hot diggity zip!

Anyway, when negative 25 volts is first applied through R19, C8 is discharged and practically a dead short, so all the drop takes place across R19 and no voltage appears at terminal 11 on the CPU chip, which disables it and shows all 8s on the display. When the voltage rises with C8 charge, the 8s vanish and 0 appears, and you are ready to go. But I didn't get my all-8s-blink until I got up to 3.3 megs. But it seems that I had some pretty low voltage cells by that time, and later with good cells, 3.3 megs gave me a fifteen second wait. I went back to 1 meg and get five seconds, very nearly, which suits me fine. It has continued so without trouble.

Reconnected at X, Q7 and Q6 are a Schmitt trigger it says here. Looks like Q7 conducts when its base is above 4.0 volts, and cuts off Q6. Below 4 volts Q6 conducts, loading R19 and giving a permanent all 8s display. There may be a question about having two features on a single indication. But I'd miss the initialization (love that term!) and the low voltage cutoff is kind of fun, too. Now I have reason to believe that the calculator and display end will work on as little as two volts (!) with Fig. 1 disabled. Of course, the bulb won't light either, but the display can be read by light reflected off a white tablecloth. I *know* both will work with 4 V and that's a dead battery. The bulb is a 6 V 150 mA deal, and could be replaced with a 2 V 60 mil one and a 75 Ohm resistor. Less bright, and should serve OK. Could even put a filament rheostat in it – or switch out a couple of 20 Ohm sections. These are, however, sub-desperation measures, and by no means essential. You will get pretty good life as it is.

The long red plus lead from the switch broke off, and I put it back with the rest of the red ones. Even so it was wrong, and left the board permanently connected. When I corrected this, I read the drain to the board and was shocked to see 125 mA. The manual claimed much less than this. Would I now have to get out a CRO and measure pulse widths and frequencies and all that jazz? Not that I couldn't possibly do it; but it would be a pain in the neck for everybody concerned. When I put in new batteries, I measured it again: 50 mils! No, Ohm's Law still holds. The load is constant, relatively; the voltage is regulated and constant, so the power is constant. If input power is also constant, you need a lot more current when you have a lot less voltage; it is as simple as that.

Just in case, let's take a look at Fig. 2. It isn't easy to see any oscillatory circuit here, and I don't guarantee my own ideas. The manual is delightfully vague also, but here

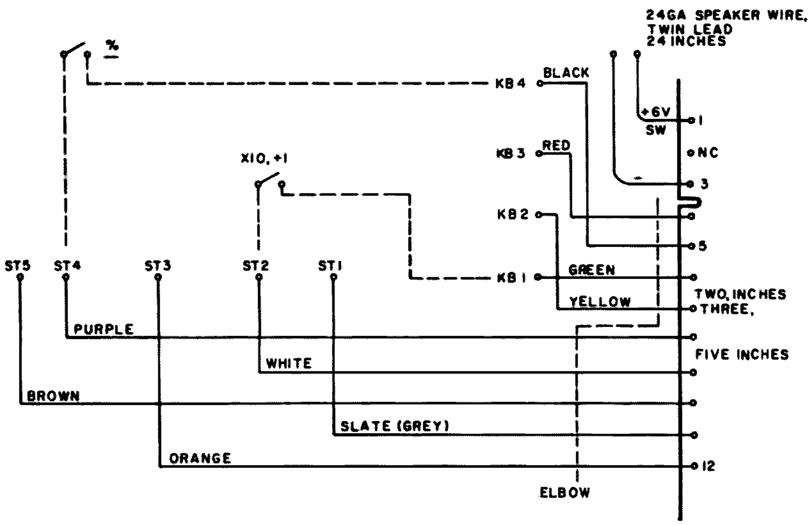

Fig. 3. KB-4 to term 4: 10 inch stranded #20 PVC elbow 3 inches from board, banded at board. ST1-5: 10 inches, 5 inches to elbow, banded to switch near KB-1 for support. Colors shown original.

goes: Initially, plus six volts charges C3. The displacement current increases current in Q2 which lowers voltage through R4 to base of Q3. This reduces current and sends a negative-going pulse through C4 to emitter of Q2. This is the correct phase to aid the signal on the base of Q2, driving it to saturation. Once there nothing changes, so it drops down to cutoff and repeats, but without any help from the – primization? – circuit, C3 R2 R3. Note that there is no Q1. Q1 is the regulator in the ac version. Q5 is the driver, the only female in the bunch. Q6 is the series regulator, looks exactly like the others. When it conducts, it loads up L1 with flux, and when it cuts off – whoops! – high voltage, and pretty efficiently, too. CR5 rectifies, C6 filters.

VR2 breaks down at some specified voltage and lets in a pulse of negative which poisons the positive bias on the base of Q6 more or less. While dc at the base, the rest of the Q6 Q3 Q5 circuit has no frequency limitation. If I missed anything here, write me; that way we all benefit.

Now let us look at Fig. 3. When you first open up the calculator, the little green and red and yellow wires look very pretty. You get the first three openings free, then they begin to break off, spoing! – singly, in thirds, triads, and diminished sevenths. You can learn to hate them cordially in short order. The wires are simply not made for servicing. While not actually "banjo" they are pretty short. I have indicated the colors on the drawing so you will know where to replace them until you can get more wire, but I earnestly recommend something like the #20 stranded PVC and the 24 gauge speaker wire (twinlead) which I used.

You can make a game of it while you are waiting to get the wire – try to determine, from the diagram, and from missing functions, which wires are broken. The keyboard is a scanning type – the ST numbers along the front apron *mean* strobe, while the KB up the right edge (keyboard inverted, of course) are keyboard buses. The number of individual functions available on these keyboards depends on the number of crosspoints. On a four by five layout like this one, there should be twenty, of course. This has, in fact, only seventeen.

An eighteenth is provided for and indicated on the drawing, but there is no crosspoint keyed for it. This is the missing key between ST4 and KB4, and is a % function. I have little use for such a function, but it gripes me to have no access to the capability, so I added a little red push-button next to the "on" shade-latch where there is room for a dozen, maybe less. I have an OAK calculator switch button, but it is a sub-surface mount. I wanted to put it in a blank space between switch and panel, but the present keyswitch assembly is so big there isn't any room. Top mounted, the OAK would look like a lily on a stem and the hell with it. The little red button isn't half bad.

Works, too. Starting with 88888888. one tap gives 888888.88 then 8888.8888 then 88.888888 then 0.8888888 then 0.0088888 then 0.0000888 then 0.0000008 and one more press gives 0. You have to use a firm deliberate pressure, any jitter will give you a double function. The long throw of the regular keys minimizes this. In use, you set up the problem and punch the % instead of the = and you're done.

I've known for some time that some chips have capabilities that are not used in the calculators, to provide for next year's features with a standard chip. This spreads development costs over several years and saves money all around, a desirable conclusion. So I went prospecting on this one. What else was hidden?

KB1 and ST4 crosspoints give an equals function, but we already have that on another key. KB1 and ST2 are something else again. This crosspoint multiplies by ten, then adds one. If you had 87 in the register and operated this crosspoint, you would get 871.

Useless as a tire pump? For normal calculations, yes. But if you equip your calculator for % with an extra keyswitch, leave the leads a bit long so that they will reach this last crosspoint. Then, at need, you can move the leads as necessary. Might turn out to be the best and most useful function the thing has got.

Every family has its wise guy, often a brother-in-law. Tell him about the calculator you fixed. He will sneer, as usual. Show him all the features, let him try it, but make no reference to the little red button. He will discover that it multiplies by ten and then adds one to what is in the register. He will sneer again.

Ask him if he knows how mathematical wizards perform mental feats such as the extraction of any roots of large numbers. What do they use factorials for? If you ask a mathematician what a X 10 + 1 function or constant would be for, they would just look at you. (This is truth, in my experience. Ask them almost *anything* and they'll just look at you. I asked the head programmer for Ma Bell what was meant by "an order of magnitude" and I got the wordless look. They're bright people – it's just when you surprise them with an intelligent mathematical question their brains de-clutch.)

Further, you can claim harassment from the CIA who are after a cypher key – like the Playfair, but completely random and longer than the message, in the modern fashion. This is hidden in the memory of the machine, which was then marketed by mistake, and the X 10 + 1 key will retrieve this when properly used. If you can fix a computer (calculator), you can generate an even gaudier lie than this. Go to it – now is your chance to get even with the – !

To get back to the wiring, two feet of the battery lead is nice. The original lead was always catching on the leaf-switch, and draping over the light guide so that it would appear behind the numbers in a most distracting manner. Now, no trouble at all. It goes on #1 and 3 of the card (between the slots); watch the polarity. No tying was used.

The KB leads were the shortest, banded (tied) together near the board terminals for mutual support. They were not tied to the board. The ST leads were formed into their own separate bunch, joining the KBs only at the edge of the board. Originally it was planned to poke the leads between circuit board and keyswitch, but there simply is not enough clearance. But the board is set back a little, making a front porch of the ST terminal strip. Putting elbows in the bunches

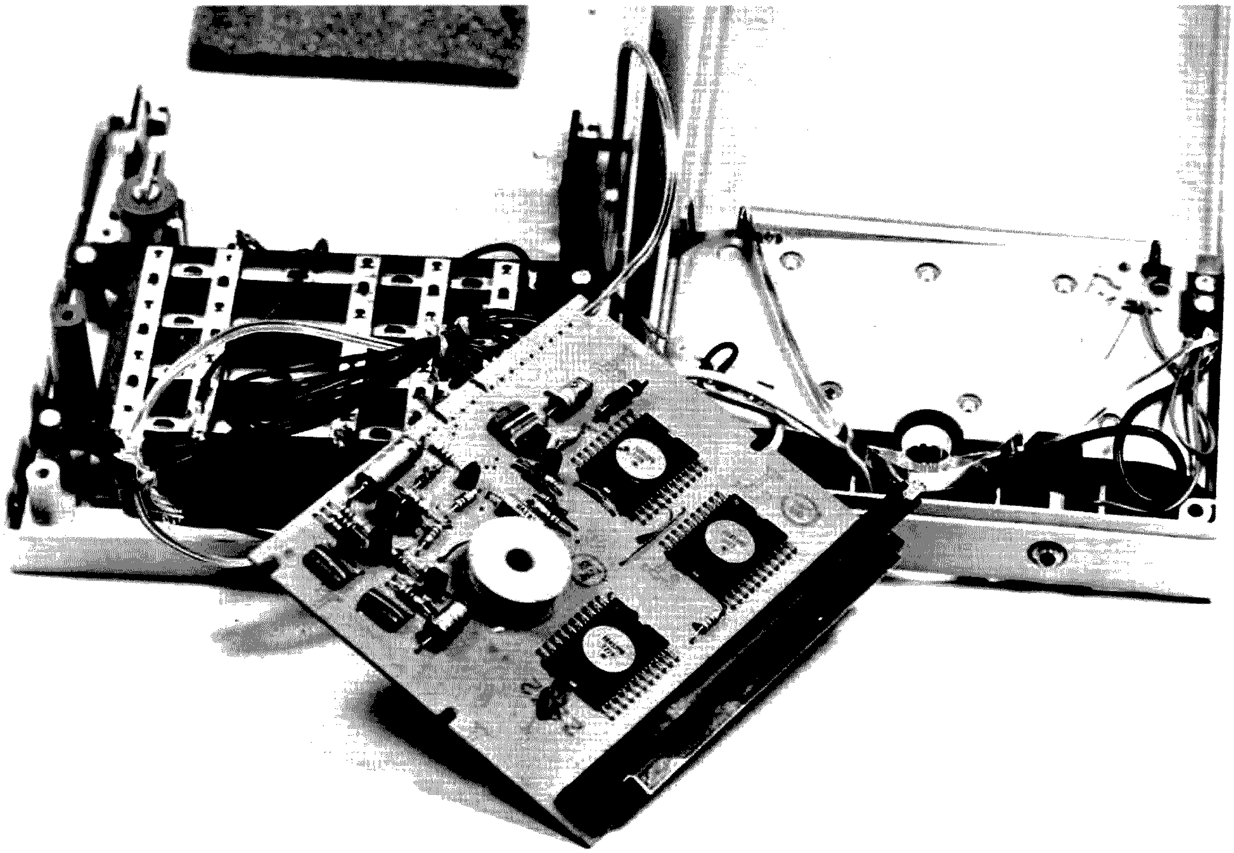

of wires and folding them and dressing them to clear is simple and quick, and that cabling is good for as many times as I want to open the box.

Now that you know what we're talking about, the photograph will explain more of the details. The top and bottom and the removed board were all jammed together to get as much detail as possible in the photograph, but when actually working on the thing, you would have the cabling stretched out, top and bottom halves well spaced with the board on edge, or even flat, between them. It sure beats the original wiring.

The light guide is interesting to the optical students. You get such a perfect field that you don't even notice it, but try to get projection like that with lenses you can afford! The plastic is Lucite, cast, with locating bosses, and a two-side-sticky tape mounting that has given me no trouble so far. The shape is near-parabolic, with the light bulb near one focus. You get total refraction along the curved edges, and straight out the straight far side. Cheap, effective, and plenty hard to duplicate by any other means. The bulb socket is held on a boss by a spring wire clamp that has one leg up, one down. You can grab the up leg in "flats" (pliers, long-nose) and adjust it readily.

R19 is that big ¼ Watt 1 meg jobbie on the board. The original 1/8 or whatever went haywire and changed its resistance, as they sometimes do. You never know if they will go up or down, and this one went down. All you can get is one quarters, so I bent the leads under the body to the correct spacing. It fit nicely.

Now is the time to say something nice about the circuit board. It is opaque, like wallboard, and thick. The thing is one-sided, and the conductors swirl all around to avoid crossovers. It is lacquered green, and the swirling patterns look like big thumbprints in green paint. The whole thing looks a bit on the crude side, especially after working on fibreglass high frequency types.

But whoever specified this board knew what he was about. There's copper there, and it is cemented on to stay, and the lacquer helps prevent solder bridges. To work on a board like that is to appreciate it. Remember that I cleaned and replaced all the damned little pretty-colored wires many times, I had the R17 up and down like a pump handle, and I replaced an eighth Watt resistor with a quarter Watt one — no trouble at all. Nothing blistered, nothing came loose. True, I have worked on printed circuits before, I was using a small iron, I was using "microwave soldering technique" and I never let myself forget that it *was* a circuit board I was working on. Nevertheless, I didn't baby it, and if you can be trusted with any board, or indeed, with any modern kit, you'll have fun with this one. It's good stuff.

The case — neat but not gaudy. Green-top keys, egg-shell white case. I don't think it is any hi-impact plastic. I think it is the good old Styrene plastic, easy to break, easy to burn, easy to melt, and easy to carve. Drills easy, too. The chaff, or chad, or sawdust, or whatever becomes highly charged and wants to get on the screen where you don't want it. Try the sticky side of Scotch tape (C) to swab it up. Get it all if you can.

The thing is held together with self-tapping screws. Don't lose any, because these are long and skinny and you may not find the sizes. They seem to be double-threaded — if they don't screw in well, back out a half turn and try again. If still not, swap with the other of the same pair. Makes a surprising difference.

There is no number or logo on the calculator. The book says ACCUMATIC E630 and gives a parts list, but who can you buy parts from?

Following some tenuous indications, I called Rapid Data Systems, Toronto Office, 129 Carlingview Drive, Rexdale, Ontario. Their number is 416-678-1000 and they referred me to an agency in the States: Calculator Service, 29245 Stephenson High-

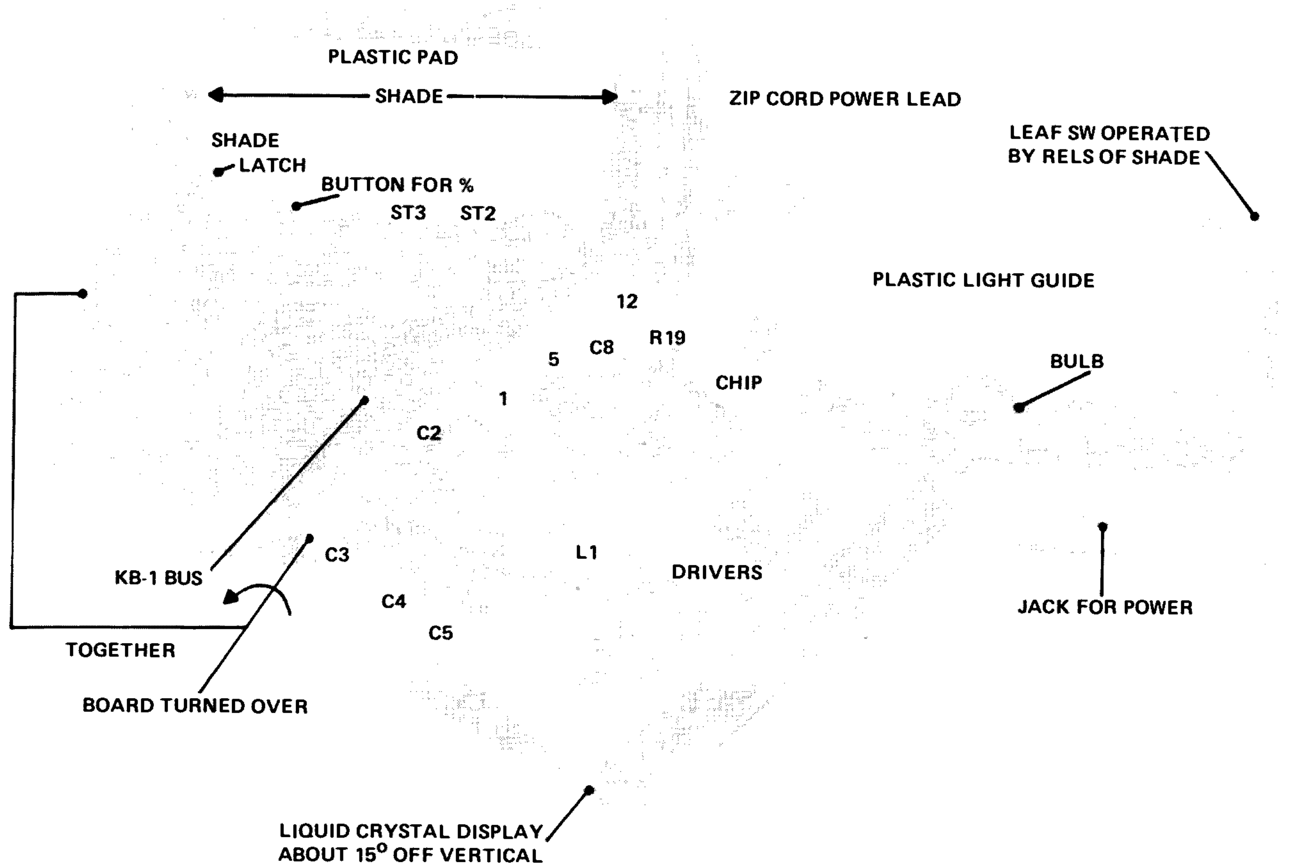

way, Madison Heights, Michigan. Their number is 313-399-4300. They were unable to identify the model, thinking it must be a prototype (come *on*, a production run of *prototypes?*). I asked about the Liquid Crystal Display RA-90009 and he gave a corresponding number #1930801-1 which was priced in single units at $15. So much for the economics.

Meshna advertised his two types of calculators in several flyers, a couple of issues of magazines and at least one catalog. He no longer advertises them, and for a good reason — his stock is running low. A lot of guys will buy them and put them away for a time, as I did, and some will continue to order from old catalogs or ads, so sales will slow down but not cease.

On November 14th, Meshna told me he had 200 units in stock. I don't know how many he has at this writing. If you want one, order as soon as you read this. There are other data I'd like to include in this essay, but there simply isn't time to get it up — you have all you really need, anyway, so here goes for the Post Office. Happy initialization! ■

---

amsat

Thought you might be interested in hearing about my recent Oscar 6 contacts with ZK1DX. This took a couple of months to set up and accomplish. To date we have made 3 contacts via Oscar 6; they were direct with no Tropo assist. If you study the distance involved you will find our range overlay to be approx. 300 mi. max. Our communications "window" is 30-45 seconds max. Rarotonga is located on the 20th parallel south of the equator; this all makes for a very interesting 2 way contact.

Wyn ZK1DX uses 80 W out and an 11 element yagi. Equipment here is Echo II and amp 80 W out, to a pair of stacked 9 element yagis with az-el control at 50. Receiver is a Kenwood R599 and Westcom Noise blanker and preamp and 3 element yagi.

I also managed to get a good tape of our last SSB QSO.

Enjoy your column.

Bob Findlay W6NZX/W7KMC
Vista CA

AMATEURS ACCESS COMPUTER VIA SATELLITE

On October 9, 1975, two radio amateurs made the first claimed remote access of a computer not only by means of a two way radio link, but also through a communications relay satellite.

This milestone was initiated by W. Franklin Mitchell Jr. operator of amateur radio station WB4BWK in Due West, South Carolina, when he transmitted an "execute program" command to a Mod 8 microcomputer located at amateur radio station VE2BYG/3 operated by Randall S. Smith in Barrie, Ontario, Canada. Randy has since changed his callsign and is now known as VE3SAT.

Randy's microcomputer received the command relayed by means of the AMSAT-OSCAR 7 satellite and executed the stored program, transmitting a preset message from VE2BYG/3 to WB4BWK. The data was transmitted in ASCII code at a rate of 110 Baud. The Federal Communications Commission has granted a waiver to radio amateurs interested in computers and radio teletype allowing them to transmit ASCII coded information through the satellite.

Both Randy Smith and Frank Mitchell are members of AMSAT, a nonprofit worldwide organization of radio amateurs based in the Washington DC area.

by
Stirling M. Olberg W1SNN
19 Loretta Road
Waltham MA 02154

Tunable FM Receiver Strips

Almost all surplus land mobile service receiver strips which find their way into the amateur service are dual conversion crystal controlled systems. The primary frequency selection used in the first conversion is a crystal bank which usually costs more than the receiver. These crystals are required to perform at close tolerances which previously were of little concern to the amateur unless he worked at band edges or nets. In order to have use of all available frequencies, the operator must either pay the price of many crystals or install fairly expensive frequency synthesizers. There is another way. Some thought and experimentation at W1SNN produced additional frequencies as well as a snooping oscillator which allows the receiver to be tunable over a very narrow range and keep the stability and close tolerance frequency control. Let's take a look at the block diagram, Fig. 1. The diagram indicates the approximate configuration of two well known receiver types, a Motorola Sensicon and the General Electric Progress Line strip.

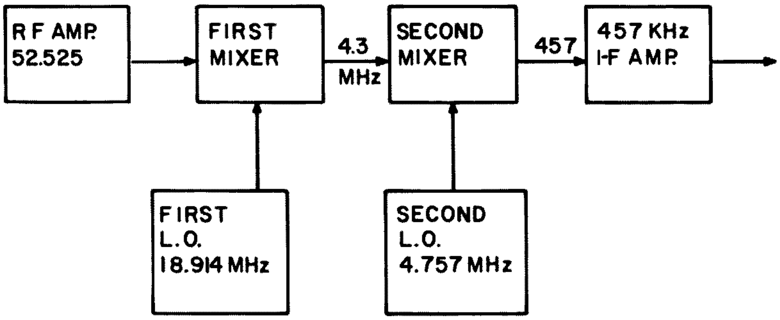

Fig. 1.

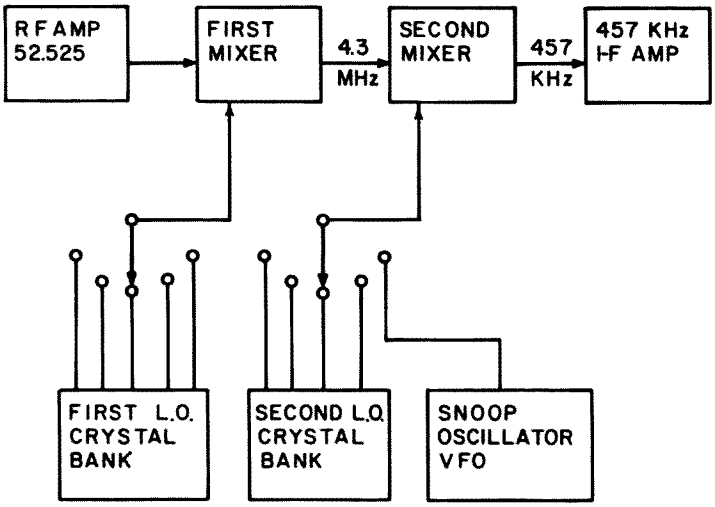

Fig. 2.

The input and cutput circuits of the rf amplifier and the first mixer have double tuned critically coupled circuitry which reduces the effects of nearby transmitter desensitization among other things. Similar circuitry is used as the output of the first mixer and is carried even further to the input and output of the second converter. For this reason these receivers have a limited range of acceptance for which they can be used without retuning. This is about ±50 kHz. By stagger tuning this can be extended without the danger of desensitization. If the station is far enough away from other transmitters, this is, of course, not too serious a problem.

The reason I went into such detail in the above paragraph is because herein lies the method of adding additional frequency control, at surplus crystal prices, and of adding the snoop oscillator. The quickest way you can move around your existing crystal control frequencies is to change the operating frequency of the second local oscillator crystal. But before we change anything, let's take a careful look at how the local oscillators and i-f frequencies work to produce an operating frequency of 52.525 MHz. A Motorola Sensicon Receiver strip will be used.

According to the manufacturer, the first conversion crystal frequency should be calculated thus:

$$f_o = \frac{f_c + 4.3}{3}$$

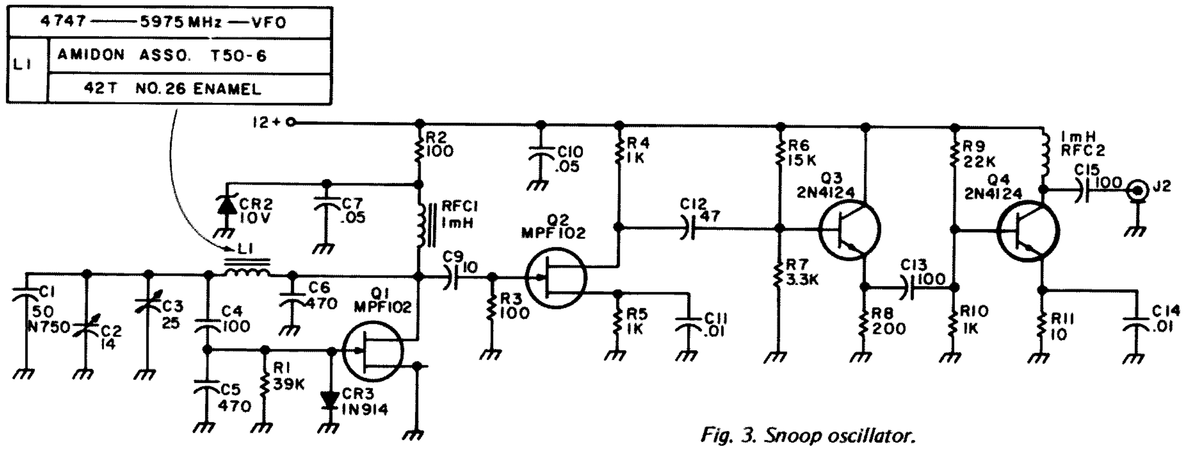

Fig. 3. Snoop oscillator.

where:
f_o = the operating frequency
f_c = crystal frequency
4.3 = second conversion i-f
Therefore, for a crystal to operate on the receiver on 52.525 MHz . . .

$$\frac{52.525 + 4.3}{3} = 18.9416 \text{ MHz}$$

Now to get the second conversion crystal to an i-f frequency of 457 kHz, a 4757 kHz crystal is used in the second local oscillator and is calculated thus:

$$f_{2n} \text{ conversion} = f_{2c} + f_{2i\text{-}f} \text{ or } 4.3 + 457 = 4757 \text{ kHz}$$

Now let us dip into our sacred junk box, and lo and behold, there is that crystal you have saved from a chunk of surplus. It has a frequency of 18.930 marked on the can and it is a fundamental crystal with the right pin spacing. So let's stick these numbers into the first equation and see where we end up. It comes out twenty kHz low, you say. Well now, if you add that 20 kHz to the second LO crystal and make it 4797 kHz, the second formula will show the correct i-f difference of 475 kHz and the first formula will show that we are on 52.525 MHz. So now you say, "Well, I have to buy the second crystal." Right, you do, but look at the surplus lists and see the nice low price.

One word of caution: Remember that the crystals used must be chosen to look into a 32 pF load and that there are many that use a lower capacitance load and the frequency will come out somewhat different than calculated. This can, in most cases, be taken care of with a frequency trimming capacitor.

All of the foregoing may sound like some kind of "hocus pocus" but be assured it is not. The manufacturers of these two strips and many others describe the same techniques for "exact frequency tuning," and although it is not as extensive a frequency excursion, it is done in the same way.

Now observe the second block diagram, Fig. 2. The crystal banks shown are substituted with a logic oscillator[1] allowing the operator to switch at will to whatever frequency he chooses to generate. Also there is a vfo unit shown which can be switched into the second crystal oscillator grid. Now you have a snoop oscillator which allows you to tune around the very narrow bandpass and listen to what is going on in between the channels.

The crystal oscillators shown are the same as the original logic oscillator. The changes are to improve the original circuit which used TTL logic blocks; the new circuit uses CMOS logic. The noise immunity of these units allows a less stringent power supply source regulation and in our case allows the use of a simple zener diode regulator coupled to the main supply voltage through appropriate voltage dividing resistors.

Crystals used in this oscillator must be fundamental types. The circuit has been used with crystals up to 20 MHz and I am sure if I had higher fundamental rocks it might go to 25 MHz before the logic block would start to react sort of funny. The circuit shown is in use at W1SNN for the six meter FM band. On two meters the addition of a frequency multiplier will provide the correct harmonic before it is fed into the crystal jack.

The circuit of the vfo was taken from the article in November, 1973, *Ham Radio.*[2] It is the very stable Vacker Oscillator which was used as a twenty meter vfo. The frequency has been changed to suit the Motorola and General Electric Progress line receiver strips. It is shown as it was modified for this application. It would be a good idea to review the article described and use the construction practices used by that author. This unit has been mounted in a nice cabinet and the output fed through a six foot coaxial cable to the oscillator jacks. The output of the snoop oscillator is brought out through a coax jack as indicated. A length of coax up to about eight feet long can be used and therefore only the new crystal bank and the snoop oscillator need be stationed at the operating position.

The second local oscillators for either the Sensicon or the Progress Line strips are fed into the grid side of the crystal socket or directly to the grid of V5 pin 6 on the Motorola or to pin 7 of V319 of the General Electric receivers. Although no modification

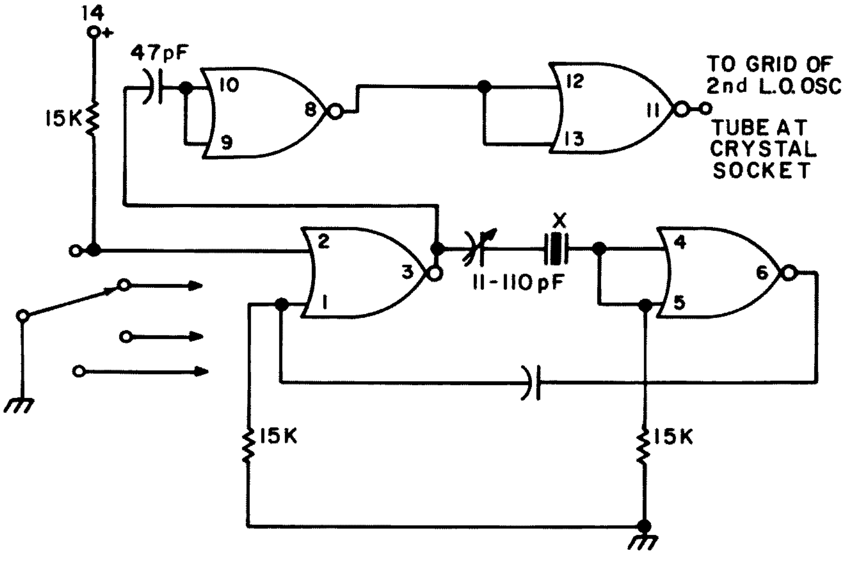

Fig. 4. CMOS oscillator.

of either receiver is required for this adaptation, it would be wise to have the receivers working before trying these stunts. I modified a crystal can head by unsoldering the can, removing the contents, then drilling a hole in the can top to allow passage of the coax through, then soldering on the coax leads to the pins in the header. Reassemble the can to the header and now you have a plug which will fit directly in the crystal socket. Make sure that ground goes to ground and so forth . . . or it won't work.

The same procedure as has been described for six meter receivers can be applied to any of the high band strips which are first converted to two meters. In our case we used another Sensicon Strip PA 9033, and after it was set up and working the vfo – crystal bank was plugged in and away we went. In the above mentioned receiver, the second conversion mixer is a pentagrid converter which also serves as the second LO. To use the adaptations described, the receiver should have this minor addition or my name will be changed by many of you. It is done thus: Locate the second mixer tube, a 6BE6 designated V6 in the circuit diagrams found in the instruction books, disconnect the wire which runs from the crystal socket X-19 to pin 6 of V6, and ground this wire. If this procedure is not followed, plugging in the vfo as described in the prior paragraphs will ground pin 6 and part of the B+ line and create my new handle.

It is hoped that these ideas will be of some use to other amateurs who enjoy using what they have and modifying circuits to achieve an inexpensive adjunct to their stations. ■

Referances

1. "The Logic Oscillator," Stirling M. Olberg W1SNN, June, 1973, *Ham Radio*.
2. "Low Power Solid State vfo Transmitter For Twenty Meters," C. Edward Galbreath W3QBO, November, 1973, *Ham Radio*.

Additional References

FM Schematics Digest, A Collection of Motorola Schematics, Sherman Wolf, Boston, Massachusetts.
Motorola Service Manual 54P802495-0, Motorola Communications.
General Electric Co., Progress Line Instruction Book #LBI-3002E, General Electric Co., Mobile Radio Department, Mountain View Road, Lynchburg VA 24502.

by
John J. Risch WØFEV
3508 Whispering Woods Dr.
Florissant MO 63031

Surplus Circuit Boards— A Gold Mine of Parts

Surplus circuit boards are currently available which contain many parts of value to "home builders" and experimenters. Many builders pass these by for two reasons: One is that the parts are too difficult to remove, and the other is that they probably don't realize what actually is available. Several articles have been written on various methods for removal of these parts, from unsoldering them using a "solder sipper" and special tips (which usually damages the component), to submerging the components in a tray of water and unsoldering (very unsatisfactory), to fracturing the board from around the part (this ruins the board). Offered here is a method of recovering parts without damage, and with a minimum of effort, and which leaves the board in usable condition.

To remove diodes and transistors, closely examine the board to determine how the leads are bent over. Carefully force a small screwdriver under the lead through the solder blob (I use a jeweler's screwdriver), and "dig" out the lead clear of the solder or break the lead and solder blob free from the surface of the board. (See Fig. 1.) Then, using a pair of long nose pliers, carefully pinch the solder blob (if it was lifted from the board) to crack it. (See Fig. 2.) In either case, the next step is important. For transistors, carefully pry the transistor off of the circuit board with a small screwdriver, exerting even pressure at several places around the case where it contacts the board. (See Fig. 3.) After removal, excess solder can be crushed off the lead with the long nose pliers.

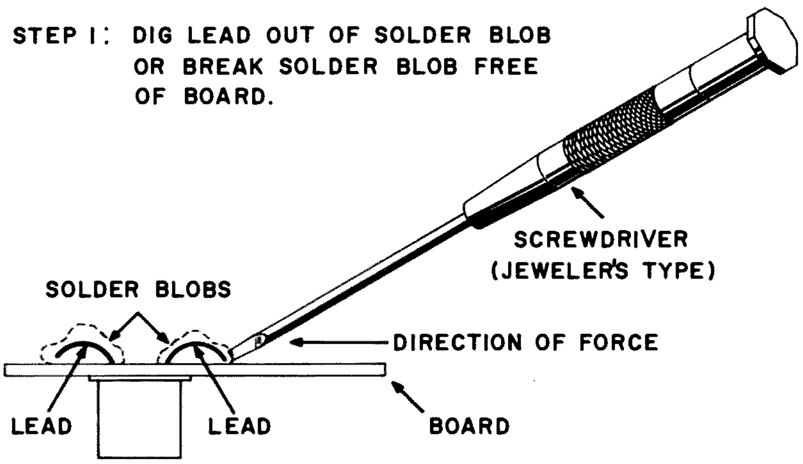

Fig. 1.

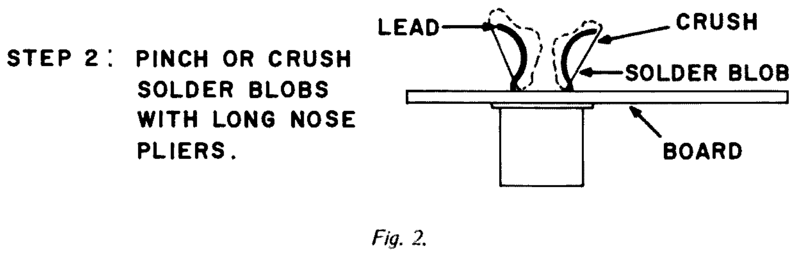

Fig. 2.

To remove diodes, after processing as above, carefully lift the lead (on the component side of the board) with small pliers and gently "tease" (pull) it free or slip a screwdriver between the lead and the board and gently lift it off.

Resistors and other components which can be slightly heated may be removed in a similar manner, but the solder blob should first be removed by heating with a soldering iron. While the blob is soft, gently strike the edge of the board on a hard surface to remove the molten solder; the lead can then be pried up as described above.

Power transistors pose a special problem, but by using the screwdriver method, the (usually large) solder blob can be flaked away and reduced in size so the component can be pried off without damage. If on your first attempt you break a lead and ruin a transistor or two, don't be discouraged — soon you will learn just the right amount of pressure to exert.

Extra caution is required when prying the lead up from the solder blob. Number one: *Point the screwdriver in such a manner that if it slips it won't gouge your hand or leg or other body parts.* Second: Do not use too much pressure or else you may shear the lead. Third: Take your time.

Transformers and other items mounted by rigid leads may be removed by first "digging" away as much of the solder as practical, then prying the component off with a screwdriver while heating the solder blob with a soldering iron (do not overheat). After the components are removed, the board may be further processed by removing the printed circuitry with a coarse rasp and finishing off with sandpaper to remove any remaining copper. An X-acto knife may be used, with caution, to remove solder and copper from the board.

The following components have been successfully removed from the popular 8 for $1.00 boards being offered by "Radio Shack" and other parts houses:

Transistors: Both germanium and silicon, PNP and NPN types, including "power types," usable up to 60 MHz (by actual test). Many may go much higher.

Diodes: Both germanium and silicon, glass and plastic types, including zeners.

Resistors: 1/4 and 1/8 Watt 5% tolerance, conventional types and many precision 1% tolerance types, various ranges.

Capacitors: Silver mica, and tubular ceramic types, various ranges.

Inductors: Molded plastic types, all marked with inductance rating in uH.

Electrolytic Capacitors: Tantalum types, 5 to 200 uF in voltage range of 10 to 50 volts.

Transformers: Molded plastic case, various ratings, marked with diagram.

Relays: Dry reed types, NO and NC types, 3000 to 7000 Ohms dc resistance, which close or open at 5 through 10 mA.

Crystals: 1000 kHz precision units.

Trimpots: Precision potentiometers, screwdriver adjust.

Heat sinks: Finned types, aluminum.

Chokes: Molded plastic, iron or ferrite core types, all marked with inductance rating.

Rectifiers: Marked with manufacturer's number; used and tested up to 110 V RMS.

Others: Several unidentified components which appear to be "Darlington" types of transistors and some possible high current diodes (zeners?).

Circuit Boards: Various compositions, laminated phenolic, fiberglass, etc.

All of the above were removed in good condition and were usable in home construction projects. Since using this method, I have not had to buy blank circuit boards, resistors, electrolytic capacitors, transistors, diodes, etc., for several months.

When selecting these boards (if you make a "hand" selection), try to select those with the parts you need most, and watch for those where transistors are mounted away from the board by small teflon or nylon pads. These give longer lead lengths. Please test all components with a transistor tester or ohmmeter before using, for some may be bad, due to the fact the circuit board was "discarded." To date, however, I have not yet encountered a bad component. In most cases the lead lengths are sufficient to allow full usage of all components; a clamp-on type heat sink may be required, when remounting some diodes and transistors.

This method is also useful when repairing small radios, tape recorders, and circuit boards in general when it is necessary to replace a component. ■

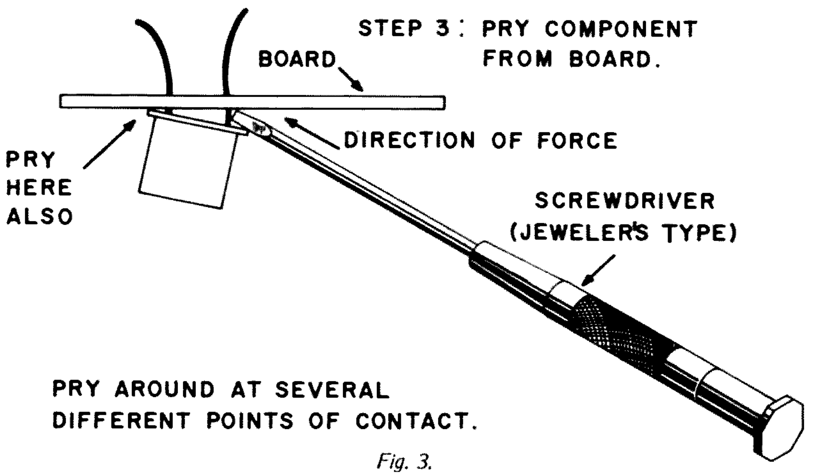

Fig. 3.

by
Brad Thompson
29 Magnolia Street
Billerica MA 01821

The Perils and Pleasures of Surplus Shopping

Everyone likes a bargain, especially with today's prices soaring to new heights. Ham radio can be an expensive hobby even to the ham who home brews his own equipment. A visit to your local electronics supermarket will confirm this, just as a visit to the other kind of supermarket shows where most of the paycheck goes.

One's thoughts naturally turn to getting things for less money. In many cities, bakeries have thrift outlets where out-dated baked goods are sold at substantial savings. Of course, it pays to peer through the wrappers for any trace of mold just in case the baker cut the final sale date a little too close.

The electronics industry has its own versions of the bakery outlets, the traditional electronic surplus outlets which can be found near most major American cities. You can make some excellent buys there, but you can also get stuck with the electronic equivalent of moldy bread if you're not careful.

Let's review a few of the perils and pleasures of buying surplus electronics. Although every transaction is unique, a few general types of situation emerge repeatedly. This list, by no means exhaustive, applies in general to both mail order and eyeball-to-eyeball purchases:

The Inadvertent Burn
The Deliberate Burn
The Speculative Plunge
The White Elephant
The Outright Disaster
The Home-wrecker
The Unpleasant Surprise
The Submerged Surprise
The Pleasant Surprise

The Inadvertent Burn

A post-purchase discovery that what you see is not necessarily what you get. This is an especially common occurrence when a part's function isn't immediately obvious. Back in the old days, big chunks of filament rolling around inside a tube's envelope were a dead giveaway. But have you ever heard a 709 op amp rattle? (A friend of mine has, but that's another story.)

Your friendly neighborhood surplus dealer will often correct an Inadvertent Burn, especially if you ask him politely. Remember, it may not be his fault. But if your purchase was a one-of-a-kind, last-one-on-the-shelf item, you'll have to renegotiate the transaction and settle for something you can't really use. Cash refunds are possible – it doesn't hurt to ask.

The Deliberate Burn

If your surplus dealer does this to you, drop him. Fast. Even if his shop is loaded with cheap, mouth-watering goodies. You have enough hassles of this variety in your life as it is, what with unscrupulous used car salesmen and government officials. Write to your local consumer protection agency and describe what happened; they may be able to help you recover your money. Your letter may be the capstone to a case they have in preparation, which could result in lots of people recovering their money.

The Speculative Plunge

It's not always the dealer's fault. You can be hoisted with your own petard, as the old saying goes. For instance, that bag of 0.1 Ohm wirewound resistors is a real bargain, especially if you decide to build that power supply which uses a 0.1 Ohm current sensing resistor. But do you *really* need 221 of them? Still . . .it's only a buck . . .

The White Elephant

A variant on the Speculative Plunge which involves a piece of equipment rather than a component.

I once bought an elderly tube-type frequency counter from a leasing company which was cleaning out its warehouse. At $25.00 the counter seemed to be an excellent buy as it was in working condition and bore few of the scars usually acquired by leased equipment. Surplus ads in various magazines were listing the counter at $150.00, and my thought was, "Wow! I can run the counter for a year, sell it to someone for $50.00, and make some money."

Last month, I took the counter to a ham auction and watched in dismay as a bored bidder took it away – no, stole it! – for $4.00! Here's what went wrong: First, there were no surplus dealers interested in it at *any* price. One dealer I attempted to sell it to wouldn't take it because he had ten more in his warehouse.

"Sure, my catalog price is $100.00, and if I ever find just *one* customer at that price, I'll break even. What? You want I should pay you $50.00 for yours? Gettoutaheah, kid!"

Secondly, the counter was obsolete. Inside that pristine grey case lived at least 36

hungry little tubes and a cooling fan which could have doubled as propeller for a B-29. And at 300 Watts or so, it *needed* that fan. Even worse, the counter would count only to 100 kHz – it was designed that way. If you goosed the input signal up a lot, it might count to 120 kHz, but only if it felt happy that day. It was fine for audio work, but most counter users need some rf capability.

The moral to this story is clear: Make sure that whatever you buy has long-term value to *you* and forget about making a profit unless you're prepared to learn by trial and possibly expensive error. Leave the speculation to the pros and your friend down the block who has a rich and generous uncle. A footnote: A friend of mine just called with the news that we (he stressed the *we* part) have a chance to buy a whole trailerload of World War II radar equipment for only $500.00 . . . we're going to look at it this afternoon . . .

The Outright Disaster

I once purchased a surplus ZM-11/U RLC bridge for only $5.00 thinking that I was getting a bargain. The surplus dealer obligingly let me apply power to the unit and we both watched the magic-eye indicator tube warm up to a healthy looking green glow.

The dealer scrounged around behind the counter and came up with a precision resistor. I connected the resistor to the terminals, switched the function selector to "Ohms," and adjusted the main dial for balance. Lo and behold, the dial and resistor values agreed! "Fine – I'll take it," I said, and went home happily.

Later that evening, I located my standard capacitor and confidently hooked it to the bridge's terminals. I selected the appropriate function, set the test voltage and confidently twisted the balance dial. Nothing happened.

I tried another capacitor, then another, and then some inductors. Still nothing. Frantically, I grabbed a resistor at random from the bench. Again, nothing. By now, I was aggravated. I located another resistor in the same range as the dealer's test resistor and sure enough, it worked.

I unplugged the bridge and reached for a screwdriver. Five minutes later, I was staring at a surplus hound's nightmare. Some misguided individual had attempted to dismantle the bridge (for service, perhaps?) by snipping the many wires which run from deck to deck in this compact instrument. Just for variety, he had thrown in a few solder splashes and odd pieces of hardware. Several freshly-cooked resistors stood out like sore thumbs. I wanted to throw up.

Anyhow, if you should happen to get an Outright Disaster, cheer up. You've plenty of company out there.

The Home-wrecker

This type of surplus purchase is a possible consequence of buying an unrecognized White Elephant. A variation is the bargain-priced, completely useful goody which just happens to be a bit too ugly or dirty to win the acceptance of one's mate or parent.

Once in my youth, I proudly dragged home a pair of vintage BC-375 tuning units in their original packing. I had done well: In a three-cornered trade involving an old Stromberg-Carlson console radio, a half dozen tired 807s, and several hundred baseball cards which included my prized Ted Williams card, I had emerged clearly on top. My friends thought so too, including the former owner of the tuning units who had worried about unloading them before the dampness in his basement caused any damage. If it had, he assured me, we could reverse the trade.

I balanced the boxed-up tuning units on the handle-bars of my battered Schwinn and walked the bike all four blocks home. The rays of the summer sun beat down on me, the bicycle and the tuning units. I began to notice that the boxes smelled slightly of mildew, but thought nothing of it.

I reached home, carried the cardboard boxes downstairs into my basement workshop and proceeded to joyously unpack the tuning units. In minutes, the basement floor was littered with packing material and the tuning units were on the bench. The smell of mildew was quite a bit stronger now as it mingled with the familiar "surplusy" odor of the fungus-proofed tuning units.

By then, it was time to do my paper route and I left. I returned two hours later to find my precious tuning units and all the packing material exposed to the elements in the back yard.

My mother, who is a painstaking housekeeper, was very angry. "Keep that horrible smelly stuff out of the basement! Don't you *dare* bring it into this house until it's had a chance to air out!"

I tried vainly to explain that, if I kept the tuning units outdoors, they would corrode, but she didn't budge. Finally, we compromised on a quarantine period where the tuning units would be allowed to decontaminate in the garage. But ever after that, she insisted on sniffing suspiciously whenever I brought anything electronic into the house. That was the first summer I considered running away and joining the circus.

The Unpleasant Surprise

Every surplus buyer has at least one of these in his or her career. The Unpleasant Surprise may take on many forms, such as discovering that those surplus filter capacitors which you carefully installed in your painstakingly constructed power supply mysteriously short-circuited ten minutes after power-up.

About all that's left is to stare glumly at the smoking ruin and comment at length on the morals, personal habits and ancestry of the capacitors and perhaps the surplus dealer.

Another variation on the Unpleasant Surprise is the Submerged Surprise. Of course, by the time you buy the equipment, most of the water has evaporated. Things look fine, you think, and you plug the receiver (or whatever) into the power socket. Everything works fine . . . for a year, a month, a day or an hour, depending upon how far the moisture-induced corrosion has to go to eat its way through one of the many fine wires in an i-f or power transformer.

Especially insidious is the Salt Water Submerged Surprise. All those dissolved salts in the sea water really up the ante in those games of chemical strip-poker going on in the dunked equipment. Even a prolonged fresh water rinse seldom helps. To avoid those rare cases where an unscrupulous dealer attempts to combine a Submerged Surprise with a Deliberate Burn, look for dried deposits on hard-to-reach surfaces between components. Corrosion on solder joints is another tell-tale sign.

The Pleasant Surprise

The penultimate goal of the surplus buyer. Everyone is pleased when things go his or her way. It's a natural part of the human emotional makeup. But there's a special kind of excitement known only on rare occasions which transcends everyday excitement.

Generally, it's associated with a "first"; for a beginning hunter, it's called buck fever. For a ham, it's that first QSO as a Novice. For a dyed-in-the-wool surplus buyer, it's called the Pleasant Surprise.

Last summer, my wife and I visited one of southern New Hampshire's famous flea markets. We arrived around three o'clock, which is rather late in the day to visit a flea market. Successful dealers have already sold everything, and unsuccessful dealers have begun to pack the chipped china, outgrown clothes, wooden coathangers and various forms of hideous bric-a-brac for the trip home.

As we browsed past the half-empty dealers' stalls, my wife called my attention to a wooden box perched precariously at an angle on the ground next to a still-occupied stall. "That box is full of electronic parts – maybe it's something you'd find useful."

"Thanks," I said and edged over toward the stall for a closer look. It was occupied by a man in his early twenties and an assortment of random junk which I estimated could easily load the battered '65 Chevy parked behind the stall clear to the scuppers.

I ignored the mismatched crockery and soiled paperbacks and concentrated on the contents of the box. About all that was visible consisted of some precision resistors packed in plastic bags, some manila envelopes and a double handful of mixed capacitors and garden-variety stuff. A hand-drawn paper sign read: $10.00 (which was crossed out); $5.00 (which was also crossed out); and finally, Make Me An Offer.

"Can I help you?" inquired the stall's attendant.

"Hi. Yes, I was interested in this box of parts. Would you consider an offer of two bucks?" I inquired.

The man hesitated. "Yeah . . . okay. I'm getting out of electronics and I don't want to cart the stuff home. But I do want the wooden box." With that, he produced a cardboard box and began transferring the parts.

After he finished, I thanked him, handed him the money and picked up the box. I carried the box to the car, locked it in the trunk and hurried back to rejoin my wife. We toured the rest of the flea market and found nothing else of interest.

When we returned home, I carried the box downstairs and spread the contents on the workbench. Surprise! One little brown envelope contained a dozen brand-new Hewlett-Packard hot-carrier diodes. Surprise! A slightly larger brown envelope was stuffed with expensive-looking CK-05 ceramic capacitors. Surprise! A grapefruit-sized bag yielded hundreds of 1N914 diodes; none had leads longer than an inch, but that's enough for printed-circuit work. Surprise! Another brown envelope held an assortment of tubular glass trimmer capacitors, all unsullied by solder or screwdriver.

It went on like that for about an hour. New and used parts of every description fell out of the envelopes. My $2.00 investment had turned into a king's ransom, a home brewer's delight.

Those are but a few of the things that can happen to you when you buy surplus stuff. The list could go on forever, especially when you consider the combinations. And remember, one man's White Elephant is another man's Pleasant Surprise, so keep your eyes open for trading possibilities. In these economically troubled times, a junk box well stuffed with surplus goodies can make the difference between a home brewed project and nothing at all, especially if you're out of work. Remember the motto of the Yankee Packrat: Don't Throw *Anything* Away! ■

by
David Brown W9CGI
RR 5 Box 39
Noblesville IN 46060

Space Age Junque

The guy that re-named junk, junque, must have either been trying to be funny, or realized early that one man's old is another man's gold! With thirteen plus years in electronics for fun (hobby-amateur radio) and profit (job-consumer electronics), I am just realizing "junk box" in ham magazines has long been misspelled. It takes most hams the first ten years to accumulate a good "junque box." The "junque box" route to better equipment can mean a complete item of surplus as easily as the bits and pieces. I purchased my first BC-348 for use as a tunable i-f for a tube type converter on 6 meters. I liked it so well (even though I have a TR-6 on 6 meters now), that I guess you could say I got hooked on them. The station and "junque box" now consists of five of them in various configurations.

I give you all this background because over these past twelve years I have collected every article on the breed I could lay my hands on. The BC series 224, 312, 342 and 348 are all close relatives, so this article will apply to them as well. It is the intent of this article to show how to put together the beginnings of a top quality VHF station an item at a time, by spending the dollars you have in the best places. While this article falls under the construction type, it is really more of a job of simple reconstruction.

We (Echo Amateur Radio Group) started our EME facility by compiling a list of already published articles, as covered by my article on EME, *73 Magazine*, Nov. 72, p 271. This article covers one of many modifications made to a BC-348 to adapt it for use as the primary receiver in our EME installation. If you can save money on the receiver, transmitter, or both, without sacrificing anything in quality, it will allow you to put it where it will do much more good. We, for instance, will be running 16 eleven element CushCraft antennas. Do you realize how little transmitter power is then required for use with Oscar? Not to mention what the huge capture area does for receiving gain at a point where tube or transistor noise doesn't kill you.

First things first, so for your "stew" first you must catch your "rabbit!" If you don't already own one, you can purchase fairly inexpensively a BC-348 in unmodified and running form from many surplus dealers. Many don't list them, since the demand is low. The whole modification can, and *should* be built, starting with the basic BC-348, and adding to it, checking out each phase as you go.

Basic Changes

Due to its airborne service, as part of the AN/ARC-8 Liaison Radio Group, the filaments are wired for 28 V dc and the B+ was derived inside the unit from a dynamotor. The dynamotor (ugh!) must go, and it is the second thing you will accomplish. The first? Get a schematic and get very familiar with the unit. Follow the signal, B+, and filament path, etc., through in your mind and locate components on your chassis. This saves many headaches later. Now carefully remove the dynamotor and tag or identify where all the leads attached into the chassis. From this point, most modifications start you rewiring the filaments for use with 6.3 V ac. Remember what a small amount of ac does to mask a very small signal? Better you spend your time building a 20 to 28 V dc regulated supply on the board shown with this article and leave the filaments on dc! Besides, there are many wires down in the i-f region of the chassis, and some if moved change alignment, BFO injection, etc. With this same

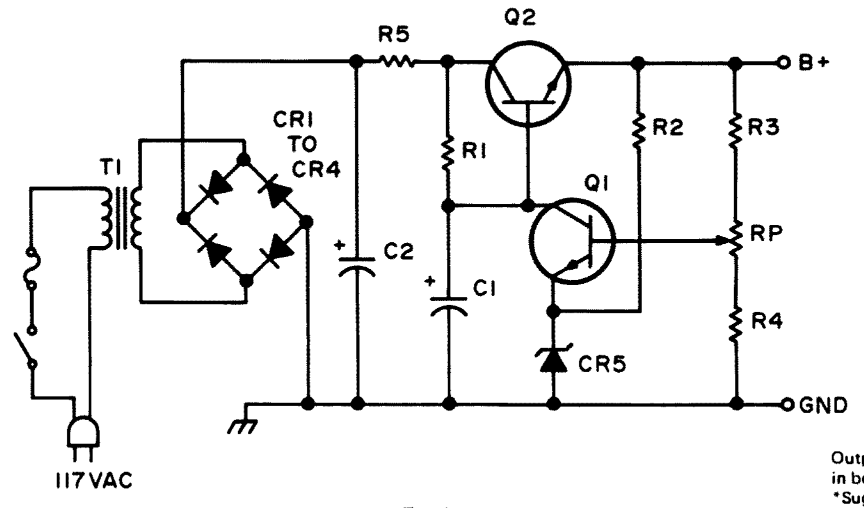

Fig. 1.

POWER SUPPLY VALUES

	28 V dc Version	160 V dc Version
T1	24 V ac 1.5 A	135 V ac 100 mA
CR1 to CR4	75 V 1.5 A	300 V 150 mA
C2	4000 to 8000 uF/50 V	500 uF 250 V
C1	100 uF/50 V	100 uF 250 V
R5	6 to 10 Ohms/7 W	56 Ohms/3 to 4 W
R3	22 Ohms/½ W	2700 Ohms/½ W
R4	"	"
Rp	220 Ohms/3 W	27k/1 W
R1	560 Ohms/1 W	8200 Ohms/½ W
R2	330 Ohms/½ W	6800 Ohms/½ W
CR5	20 V/400 mW	100 V/1 W
Q2	*Motorola MJ series (MJ1001) 50 V/2 A	Motorola MJ series or MPS U10 250 V/200 mA
Q1	Motorola MJ series (or 2N3053) 50 V/250 mA	Motorola MJ series or MM 3009 250 V/50 mA

Output voltage dependent solely on components loaded in board.
*Suggest use with moderate heat sink (i.e., power supply aluminum chassis).

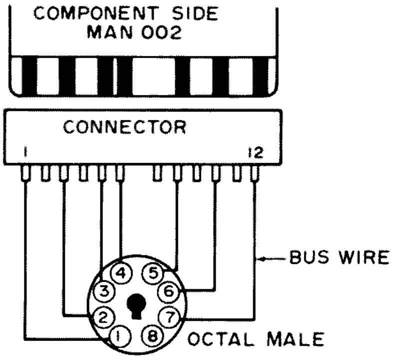

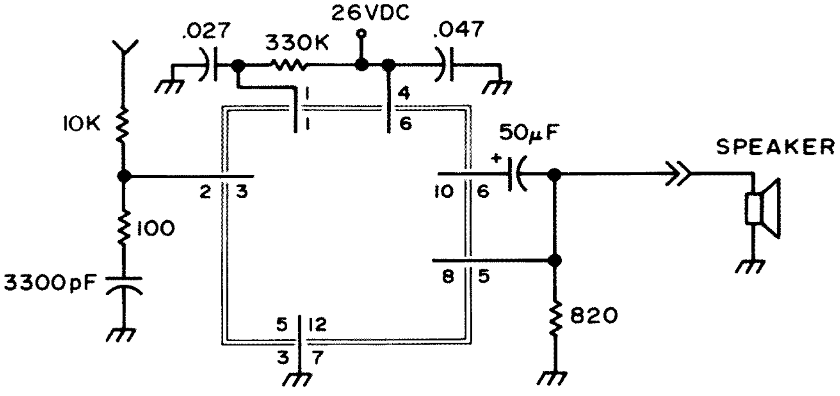

Fig. 2.

board and the second set of components listed, build the 160 V dc regulated supply. Follow the schematic and board loading diagram carefully, since this is the only "building" involved in this article. The lower than usual B+ is no accident. Two reasons most conversions ran the 210 to 255 V dc for B+ was they saw it on the original schematic, and to some degree it was required by the audio output tube. To eliminate the latter need, I have included what I feel to be the best way out of the "headphone audio" found in many surplus sets. In fact it actually eliminates the biggest heat producer in the chassis and ups the audio to speaker level in one blow.

Audio Changes

Fig. 2 describes a solid state audio system that drives a 35 Ohm speaker to as much audio as you could ever need. The speaker and the module to be described can be purchased from radio-TV service stores as an RCA replacement item. It fits into the same octal socket (with an adaptor you make), and gives off considerably less heat. This audio system runs reliably from 28 V dc, so now you know two reasons for leaving the filaments on 28 V dc. It can be purchased for less than you could build it, and definitely cheaper than replacing the output tube when it burns itself alive! The module is known as MAN 002, Sound Output, Part # 133455, and its socket used in making the adaptor is a 13 pin PC board inline, Part # 133634. Buswire is used to connect the inline to a male octal per Figs. 2 and 3. The module only draws 10 to 60 mA idle to wide open. You must rewire the audio output octal socket in the BC-348, but this is much easier than trying to pull it out and notch out the aluminum chassis (HA!). Do it in the following order and it goes quickly.

Removal

Remove the B+ leads from plate and screens, pins 3 and 4. Remove the audio output transformer. Remove the filament leads from pins 2 and 7 and note which is ground. Leave the ground connected at the ground end. Trace hot side to previous tube, and replace with same type of wire (same I capability) only long enough to reach to the area where the audio transformer was. Mount a terminal board having one insulated terminal and a ground in that area and mount on it a 15 Ohm/4W resistor, connecting one end to the extended lead and the other end to ground. This keeps the 28 V dc filament string series correct. Remove the lead to pin 1 to ground. Leave ground end connected. Remove lead from pin 5 (audio in) and don't lose the point the other end of this lead goes to. Remove lead to pin 8, both ends. Pin 6 is already unused and should be blank.

Rewiring

Install a 100 Ohm ½W resistor in series with a 3300 pF disc ceramic capacitor between pin 2 and a ground lug. Replace the lead that went to pin 5 (audio in) with a 10k ½W resistor with spaghetti over the full length leads and run to pin 2 same as the above connection which was a high frequency roll off filter. Use the wires left grounded in the removal process to ground pins 3 and 7, using the closest one to each pin. Wire a 330k ½W from pin 1 to 4. Wire a .027 uF paper or mylar 100 V capacitor from pin 3 (gnd) to pin 1. Wire a .047 uF (same type) from pin 7 (gnd) to pin 4. Run a lead (orange-for second highest B+) from pin 4 to a new power connector. I suggest a Cinch Jones 12 pin type P-312-CCT. This is a hooded plug so the cable can leave the chassis through a grommet hole and plug in at the power supply. The power supply chassis mount mate is a CJ type S-312-AB. Wire a 50 uF 25 V dc electrolytic capacitor with plus to pin 6 and minus to pin 5. Spaghetti may be needed on the leads. Wire an 820 Ohm ½W resistor from pin 6 to ground lug. This is a fixed load on the audio output. Speaker leads should be attached to pin 6 and ground and led to the new plug. Do not allow the lead from pin 6 to touch ground while receiver is on as this is a transistor output stage. That completes the change except for plugging in the adaptor and module.

Since SSB is around to stay, there is one modification that *must* be made to a BC-348 to use it effectively. Obtain a 350k audio taper pot and place it in the hole where the dial light dimmer pot is located. Remove and discard the dimmer and wire the bulbs direct (bypassing the pot). Extend the audio leads up through the hole used for rf section to i-f section leads (under the BFO switch). Mark this pot as volume or audio and remark the original dual pot rf gain. This way full or high audio can be used with the rf gain used to control i-f-BFO mixing levels.

That completes the BC-348 T M-1 and M-2 modifications. Ours is up to M-12, although several of the other 10 are somewhat specialized for Oscar and EME, such as full AFC, auto scan, motor control remote tuning, added i-f for panadaptor and discriminator meter – AFC take off, recorder drive, multi-audio out for record, etc. Each of these were added at very little cost, yet we

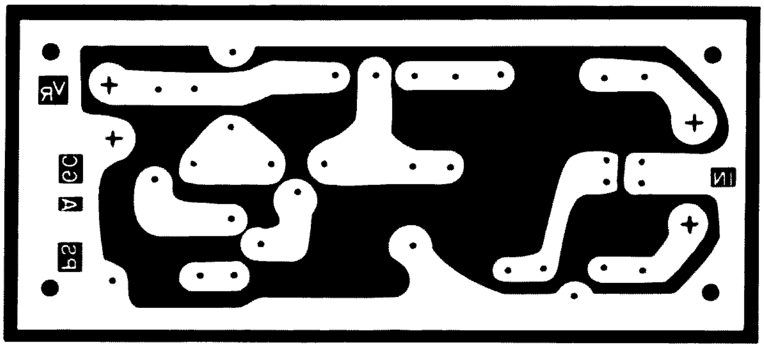

Fig. 3(a). PC board (full size).

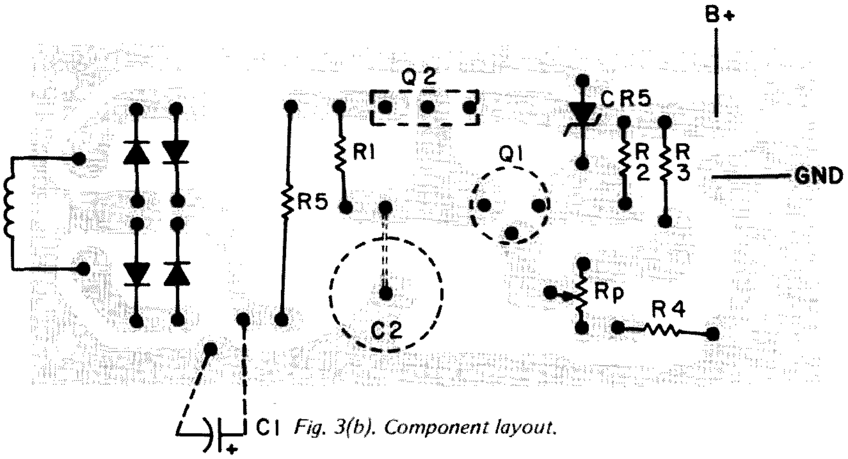

Fig. 3(b). Component layout.

now have a receiver comparable to that used at ground tracking military stations.

I hope to continue with follow up articles on the BC-348 T and other of our EME equipment to help generate interest in EME and the fascinating world of Oscar, and convince you that there are inexpensive ways of participating in these projects cheaply and without a huge antenna farm on your lot. I would be happy to help in any way I can on the BC-348 modifications in this article, but please make the questions as clear as possible and confine them just to these modifications and not the BC-348 as a whole. Don't forget an SASE.

Happy and "quiet" listening on your new breed "junque" receiver. ■

Oscar Orbits

TM

Oscar 6 Orbital Information / **Oscar 7 Orbital Information**

Orbit	Date (Mar)	Time (GMT)	Longitude of Eq. Crossing °W	Mode	Orbit	Date (Mar)	Time (GMT)	Longitude of Eq. Crossing °W
15432	1	0105:17	70.4	A	5905	1	0050:19	62.4
15444	2	0005:13	55.4	B	5918	2	0144:36	76.0
15457	3	0100:09	69.2	AX	5930	3	0043:56	60.8
15469	4	0000:05	54.2	B	5943	4	0138:13	74.4
15482	5	0055:01	67.9	A	5955	5	0037:34	59.2
15495	6	0149:56	81.7	B	5968	6	0131:51	72.8
15507	7	0049:52	66.7	A	5980	7	0031:11	57.6
15520	8	0144:48	80.4	B	5993	8	0125:28	71.2
15532	9	0044:44	65.4	A	6005	9	0024:48	56.0
15545	10	0139:40	79.2	BX	6018	10	0119:05	69.6
15557	11	0039:36	64.2	A	6030	11	0018:25	54.4
15570	12	0134:31	77.9	B	6043	12	0112:42	68.0
15582	13	0034:27	62.9	A	6055	13	0012:03	52.8
15595	14	0129:23	76.7	B	6068	14	0106:20	66.4
15607	15	0029:19	61.7	A	6080	15	0005:40	51.2
15620	16	0124:15	75.4	B	6093	16	0059:57	64.8
15632	17	0024:11	60.4	AX	6106	17	0154:14	78.4
15645	18	0119:06	74.1	B	6118	18	0053:34	63.2
15657	19	0019:02	59.1	A	6131	19	0147:51	76.8
15670	20	0113:58	72.9	B	6143	20	0047:11	61.6
15682	21	0013:54	57.9	A	6156	21	0141:28	75.2
15695	22	0108:50	71.6	B	6168	22	0040:49	60.0
15707	23	0008:46	56.6	A	6181	23	0135:06	73.6
15720	24	0103:42	70.4	BX	6193	24	0034:26	58.4
15732	25	0003:38	55.4	A	6206	25	0128:43	72.0
15745	26	0058:33	69.1	B	6218	26	0028:03	56.8
15758	27	0153:29	82.9	A	6231	27	0122:20	70.4
15770	28	0053:25	67.9	B	6243	28	0021:40	55.2
15783	29	0148:21	81.6	A	6256	29	0115:57	68.8
15795	30	0048:17	66.6	B	6268	30	0015:18	53.6
15808	31	0143:12	80.4	AX	6281	31	0109:35	67.2

Cx

Because of the Canadian postal strike, last minute corrections to "RTTY Autocall — the Digital Way" (February, pp. 76-82) were not received in time for publication. The corrections are as follows:

- Page 76. The correct code for Calgary is T3A 3A9.
- Page 76, col. 1, line 20. Should read, "diodes, ICs and many resistors and."
- Page 76, col. 2, line 10. Should read, "units) such features as the NNNN shut."
- Page 77, col 1, line 4. Should read, "as keyboard-operated perforator turn on/off."
- Page 78, Fig. 2. "AA IN" and "CA IN" should be reversed. Also, "FORCE ON C" should have been inserted connecting to the top 7474, in a fashion the same as for the connections of "FORCE ON B" and "FORCE ON A."
- Page 79, col 1, line 30. This note should have been added at the end of the "Clock" paragraph: "If, when first powered up, the clock does not start, momentarily ground pin 15, V4. This will allow the clock to run through once. Operation after this will be normal."
- Page 81, col. 1, line 5. Should read, "printed circuit board that is stacked on top of."

by
Everett C. Magee WA4LZM/W5SAY
6260 N.E. 20th Terrace
Fort Lauderdale FL 33308

A PC Board Bonanza

The amateur experimenting with solid state projects certainly must have a well stocked junk box these days. Higher minimum order requirements, spiraling prices, failure of distributors to stock catalog items and slow delivery have left many of us with unstarted or unfinished projects. And it is getting worse!

The accumulation of tube vintage parts are of little, if any, use in solid state circuitry. On the other hand most of the mini discrete devices can be used to some advantage in even the latest IC lash ups.

The solution to the above, at this QTH anyway, is surplus PC boards. Let the buyer beware! There are circuit boards and then there are circuit boards. Keep away from the encapsulated board as well as the older and larger boards for obvious reasons.

As an example of the circuit board bonanza, I have acquired and stripped (with 85% recovery of parts) over sixty boards within the past six weeks. They were the small 2"x2½" computer boards, look new and were probably thrown out due to an imperfect test or were replaced by modern circuits. I kept a record of the most recent batch stripped. Here are the results. Out of 23 boards, costing $2.90, the following components were recovered:

126 transistors, mostly plastic, GP or switching types such as 2N3638, 2N3640 and 2N3646 or equal.

343 resistors. 290 were ¼ W 5%, others were ½ W 5% or ¼ W 1%. All good values.

61 capacitors. 45 were Mylar and 18 were SM midgets. 5 were Erie piston trimmers, each with a catalog price in excess of that paid for the whole batch of boards.

171 diodes, both silicon and germanium, equal to 1N914, 1N60 and 1N270, etc. Several were zeners in the 4 to 8 V range.

22 right angle, 15 pin connectors. These are perfect for joining a display board to a main board for counters and clocks.

As I mentioned earlier approximately 85-90% of the recovered components passed a preliminary test, were separated according to type or value and stored in partitioned plastic boxes for future use. Of the small percentage of rejects some were damaged in removal while some may have been defective when received. No component, new or used, is installed at this QTH without prior test. I learned that the hard way.

To accomplish the above high recovery rate takes patience, a good desoldering technique and the proper equipment. All equally important.

Let's start with the equipment. I will first list the minimum requirements then follow up with some very desirable additional items.

The basic tools are as follows: Needle nosed pliers, 4 or 6 inch. These should be of best quality with a sharp needle point, Klein 303-6 or equal; a solder aid/scriber equal to Moody MS-2; a small pocket type screwdriver, Xcelite R-3323 or equal; a small sharp pocket knife; a small vise; and a small soldering iron, such as an Ungar No. 776 with Nos. 1235 and 535 heating elements plus No. 331 and the No. 6940 Princess minitip. (More about this soldering iron combination later.)

The following items would make the work easier and would probably reduce the number of damaged components: A small multiposition vise such as Lafayette's 13P55916 would permit positioning the board at a more convenient angle; a combination bench light and 5" magnifier would help see those tiny leads and reduce eye strain; and a variac or equal would control the soldering iron temperature to just enough for the job at hand.

Now a word about that all important technique: We start with the choice of boards. Look for unencapsulated, 1/16" thick, foil on one side boards containing the items you want. Some transistors are user coded and, until someone comes up with a conversion table, might complicate your selection and testing. The component leads usually are cut about 1/16 to 1/8" longer than the board thickness and crimped before soldering. This is what we want.

We start with the transistors since we have no way of heat sinking them. Set up the 1235 element with a 6950 tip at about 80 V, if a variac is used, so that you have an element full of heat, at a low value, transferring instantaneous heat thru the minitip when it touches the foil. Hold the board in your hand, in a vertical plane, about 6 or 8 inches from the vise, touch the CLEAN tip to one of the foil pads JUST long enough for the solder to become fluid then QUICKLY remove the iron and at the same time tap the edge of the board smartly on the vise. The molten solder will fly off leaving the lead clearly visible. Lift the lead, with the knife blade, clear of the pad to a perpen-

dicular position. This will free the lead. Repeat the operation with the remaining leads in sequence. Do not desolder more than one lead at a time. The time used in lifting the lead allows the transistor to cool off a bit between heats. After the third lead is freed turn the board over and, using the knife blade, pry the transistor from the board. Straighten the leads with the pliers and lay aside for later testing. Remember, too much heat or heat applied for too long a time will ZAP the component.

Next in order of fragility are the diodes. Fortunately we can heat sink them by sliding one jaw of the pliers under the lead, grasping the lead firmly, then as heat is applied to the foil side we lever the diode lead free much as a dentist pulls a tooth. The pulling action straightens out the crimp as the lead comes free.

The same approach may be used on the capacitors and resistors. In some cases the scriber point must be used to lift the lead enough for the pliers to be slipped under it. While removing diodes, capacitors and resistors no tapping is required. Just clamp the board in the vise and use the iron in one hand and the pliers in the other.

The angle connectors are salvaged by using a hotter soldering combination plus the tapping technique to remove the solder before prying them free with a screwdriver. Work from both ends as the connectors are easily broken.

After the stripping operation is completed, sort the components, test and store them for future use. The GO-NO GO testing is done here using the Heath IT-10 Transistor Tester and a Simpson Model 260 Multimeter. An adaptor for the small transistors was made by soldering spring wire contact and leads to the proper pads of one of the stripped boards to allow testing in the IT-10. While the transistor leads are short they will fit thru a 1/16" board perfectly and are of top quality.

Surplus boards are available from many sources and at prices ranging from give away to all the traffic will bear. Select your PC boards with care. If you can't use the parts it's no bargain at any price. ■

by
Robert Villastrigo WN5NBE
309 Irvington Place
San Antonio TX 78209

Government Surplus: Is It All Gone?

The label on the crate said "Radio Transmitter," and gave the coded model number. I knew that this particular model cost the U.S. Government $1235, and considering the paltry few cents I had bought the crate for, I eagerly pried open the crate and dug through five pounds of packing material to get at my prize. But I found no new radio transmitter. I found instead a dusty, half-empty wine bottle – and a cheap brand at that.

I was understandably disappointed, but not exactly surprised; buying from the world's largest and cheapest department store, the Defense Property Disposal Service, has increasingly become a test of patience, a kind of Russian roulette filled more and more with pitfalls. Sad to relate, the DPDS is rapidly losing its rating due to an apparent shortage of materials. Worse, the quality of the material available is declining, as is the frequency of the sales themselves. Another barometer is the price of the lots; costs have doubled and even trebled within the past few years. To cite some examples: Electronic equipment and spare parts weighing ten thousand pounds went for four cents a pound a year ago; now you will have to pay as much as thirteen cents a pound for the same amount of stuff. Last year, you could buy instruments at sixty-five cents a pound; now the same instruments at surplus will run you well over a dollar a pound. I recently paid nearly twelve dollars a pound for some Hewlett-Packard test equipment – double the rate I paid eighteen months previously.

There are instances to make both the taxpayer and the surplus buyer blanch. A short time ago 345 individual lots of electrical and electronic equipment came on the market. The lots cost the U.S. Government – and hence the taxpayer – just under $8 million. The whole shipment was sold off for $127,000. Much of the equipment was brand new, and most of it was still packed in original containers. Electronic lab equipment, aircraft parts and instruments that the U.S. paid $6 million for was parceled out to surplus buyers for less than $75,000. A good deal for the buyers, a bad deal for the taxpayers.

As staggering as these figures are, they are a drop in the bucket compared with what went on following World War II and the Korean War when you could buy an aircraft carrier at the scrap price of two cents per pound. The catch, of course, is that you had to move the thing yourself; this could be a problem if you lived in Boise, Idaho.

The surplus buyer's problem today is finding lots that contain worthwhile electronic equipment at prices that make their resale really worthwhile. And it's getting tougher all the time. Government contracts for defense have been sharply reduced, and in some cases cut altogether. New contracts for design and manufacturing are practically non-existent. Foreign aid programs have felt the weight of the Congressional axe. The wake of the war in Vietnam left no bonanza for the American surplus buyer; most of the goods left over from that war are being funneled right back to Southeast Asia and, increasingly, to Israel. Only driblets seep back to the country of origin, i.e., here, for sale to the public that paid for them in the first place.

I talked to one of the nation's top dealers in surplus electronics, Ray Kilby, who has some advice for anybody who wants to get into the surplus game. Kilby is an executive with S.P. Airparts in North Hollywood, California, and is ranked among the most prolific buyers of surplus materials. Kilby's prime concern is stockpiling parts and units against the day when the surplus supply is truly exhausted. To beginners who are contemplating bidding on their first batch of surplus as an entry into the game, Kilby has this to say: "Don't! It takes more years to learn the *little* things about this business than it does for any other professional to learn the *big* things about his profession. You don't stand a chance – unless you happen to be wildly lucky. Competition is pretty fierce right now, and is not liable to lessen. The average man can't plot a money-making career by waiting around to get lucky, and luck is the name of the game for the amateur surplus buyer."

If you decide that your luck is running good and want to go against veteran Kilby's advice, bear in mind that Government stocks are not as large as they have been in years past, and that you will be bidding against the pros–guys like Kilby. It's better, and safer, to buy the odd piece from your local junkyard or surplus store. Begin your own stockpile of items that will grow in value. Those ten-for-a-dollar printed circuit boards won't be around much longer. The $20-$30 receivers and transmitters that, with a small conversion, were so popular with hams and SWLs,

have all but vanished from the shelves. The latest government receiver on the market has a digital readout and goes for anywhere from $500 to $1400, depending on the condition. And there are not a great deal of even these expensive items available.

The top-ranked test equipment is just not making it to the shelves; most is being gobbled up by companies who are in the business of reconditioning and resale for a staggering price that can be afforded by a corporation, but not by the hobbyist or small businessman. Another factor facing the small buyer is the sheer sophistication of the equipment that sometimes becomes available; some of it is so specialized that it is useless for any function other than the one it was designed for.

Okay, so the picture is a little dark for those who might like to break into the surplus field as a career. This doesn't mean that the hobbyist or the inveterate do-it-yourselfer has to forego the pleasure of the hunt or the personal rewards of scouting for bargains. They are good buys in some items that haven't made it to the commercial field of electronics and won't have any industrial use until the advances made in military electronics are made available to the consumer. What we are talking about is real war surplus: overruns, over-purchased and over-ordered electronic equipment designed for the military, usually developed far in advance of the consumer market. Some of this stuff is really a stripper's delight, containing as they do many of the newer solid state devices that have a healthy price tag when bought new. A few power supplies are surfacing among the unidentifiables, and most have low voltages and are near-perfect for transistor applications.

A recent report from the West Coast reveals that the U.S. Government is bulldozing tons of good electronic equipment and turning it into a mass of unusable junk. The electronic equipment, ground to bits, was worth millions, destroyed, the Government says, because it had not been "demilitarized." In government jargon, to demilitarize is to render equipment unusable in its original form. In the past, a technician demilitarized a piece of equipment by using a pair of side cutters to snip off a plug or remove a meter. The equipment was rendered inoperable – but it *was* repairable. Unfortunately, this method of demilitarization has been brought to an end; the equipment is simply destroyed beyond redemption. Sadly enough, there are instances where the identical equipment can be purchased across many electronic dealer counters in pristine form – but for outrageous prices. If the public could have access to the plowed-under electronics, purchasers could have a real break on a fair-bid basis. What to do? Write your Congressman. If the present policy continues, the shortages will become even greater, the prices higher. It could come to the point where the great middle ground will vanish, leaving the individual purchaser no choice but outright junk or goods priced above his head.

Until that day comes, here are a few basic guidelines to the surplus shopper. When examining items, pay close attention to the way the crates are tagged. The items are tagged with one of three colors on tags about 3 x 8 inches. *Yellow* means that the described item is new or in operating condition. *Green* indicates an item that doesn't work, but that is repairable. A *red* tag means disaster; even government technicians are unable to fix whatever is wrong. These tags are usually correct, and a quick glance can save you plenty of grief. But remember that the really good stuff is going out the back door as soon as your local surplus dealer unloads the truck. The big dealers are there, waiting and, as the shortages grow, so will the lines of those waiting for good deals. Your best bet is to cultivate the friendship of one dealer; most will save wanted items for faithful customers.

If the flow of surplus material continues to choke off, many dealers who have had second homes at redistribution centers will fade from sight. Buildings and property around these once-bustling centers will become vacant. The employees, once junkmen, will become junkmen again. Leaving the empty warehouses, they will take to the roads in flatbed trucks, looking for junk. They will be hoping that someday the good times will roll again.

If there's another war, that is. ■

Inherit the

by
Warren L. MacDowell W2AOO
11080 Transit Road
East Amherst NY 14051

An accurate wind speed indicator (anemometer) is especially difficult to design. The most significant problem becomes apparent when very low wind speeds are involved. The most common anemometer is the rotating "cup" device that in turn drives a small generator or electronic indicating device. The "cup" anemometer, at low wind speeds, must be very efficient (wind capture wise) and have little friction so as to detect low wind speeds.

The accepted reference for wind speed indication is a tube of a known diameter bent at a 90° angle which then directly feeds an air pressure meter. Of course, this tube must face the oncoming wind directly at all times and all tube dimensions must be taken into consideration. The air pressure meter readings are then converted to wind speed in

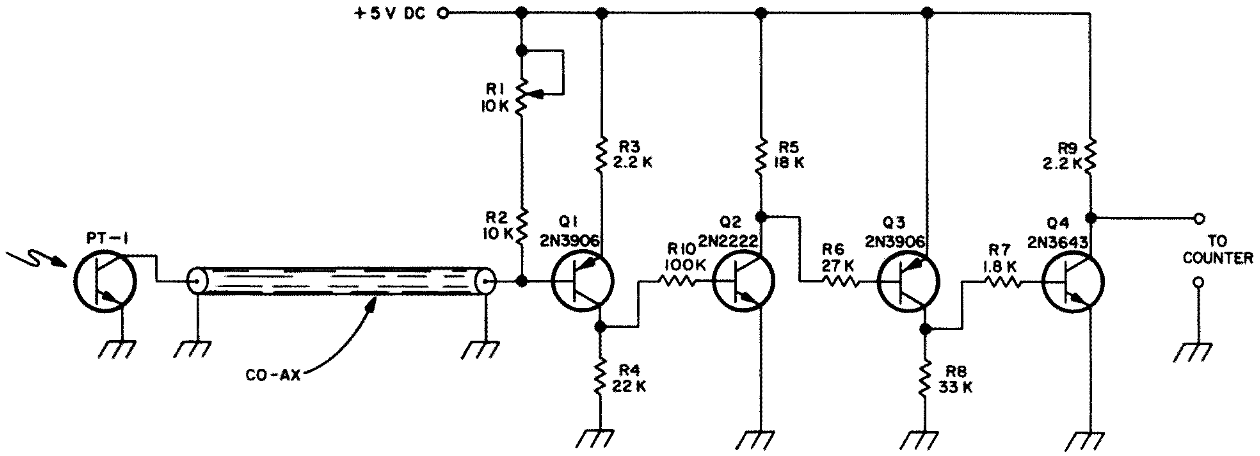

Fig. 1. Anemometer light activated trigger. PT-1 – Radio Shack FPT-100 phototransistor; Q1, Q3 – 2N3906 NPN silicon transistors; Q2 – 2N2222 NPN silicon transistor; Q4 – 2N3643 NPN silicon transistor, R1 – 10,000 Ohm trimpot; R2 – 10,000 Ohm, ¼ Watt carbon resistor; R3, R9 – 2200 Ohm, ¼ Watt carbon resistors; R4 – 22,000 Ohm, ¼ Watt carbon resistor; R5 – 18,000 Ohm, ¼ Watt carbon resistor; R6 – 27,000 Ohm, ¼ Watt carbon resistor, R7 – 1800 Ohm, ¼ Watt carbon resistor; R8 – 33,000 Ohm, ¼ Watt carbon resistor.

Wind

miles per hour, depending on air density, temperature and whether or not a bird is resting on the tube (coefficient of air friction depends on size of bird, number of feathers on body and how many seeds he has eaten the day before – owls excluded due to excessive mass).

Various other types of anemometers have been created. For example – those that expose an electrically heated wire to the wind and then measure the specific resistance of the wire. As the wire is cooled by moving air, the resistance would change accordingly.

The average ham shack in this day and age possesses a digital frequency counter with at least a one second input gate time. (If not, begin construction of one immediately.) Now, assuming that you have a frequency counter, you also need a device planted on your roof top that follows the wind speed and will produce one pulse every second when the wind speed is one mile per hour.

Creating a pulse that will trigger the counter is not much of a problem. Devising a way to generate this pulse at one time per second at one mile per hour is another story. We decided to generate the trigger pulse by using a rotating disc with a single hole drilled in its periphery to admit a light pulse. If a light emitting diode was placed above the rotating disc and a phototransistor below the disc, the hole would pass pulses of light as the disc was rotated. Phototransistors are very responsive and fast switching devices.

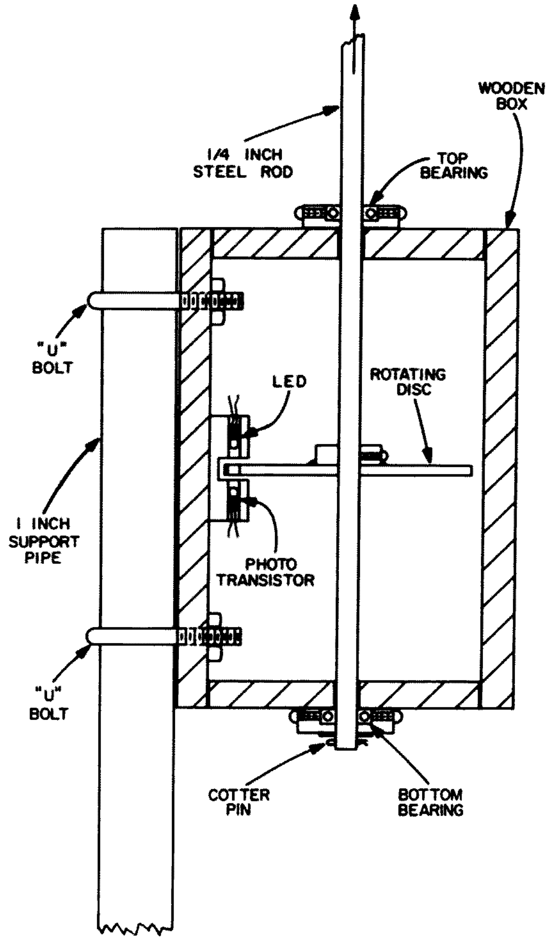

Fig. 2. Main indicator assembly.

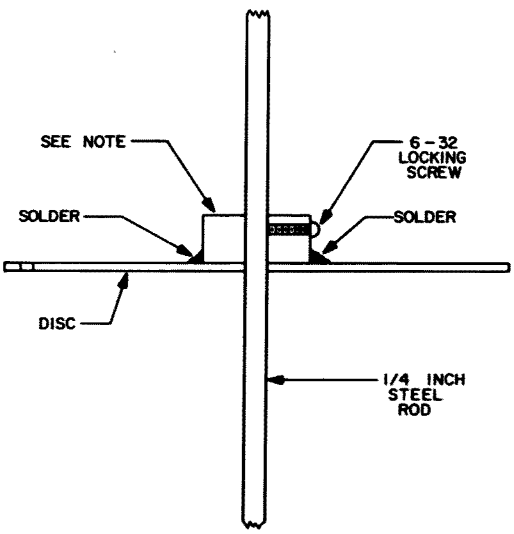

Fig. 3. Disc to shaft attachment.

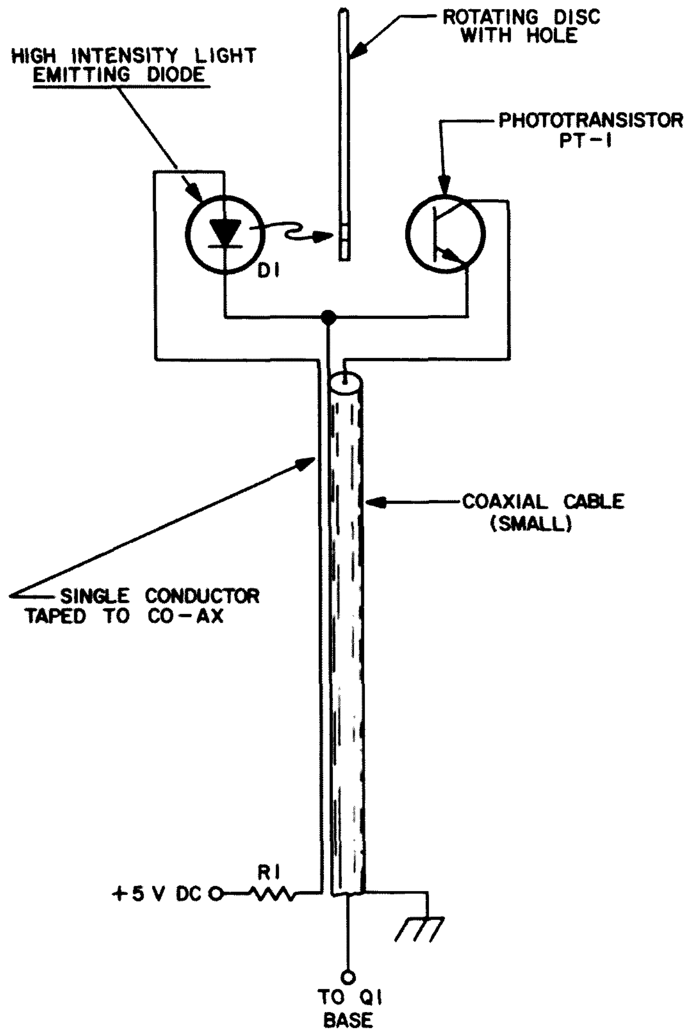

Fig. 4. LED – phototransistor cable. D1 – high intensity red light emitting diode (any bright clear red LED); PT1 – FPT-100 phototransistor (Radio Shack); R1 – 220 Ohms, ½ Watt carbon resistor; Coax – RG/59U or smaller. Miniature mike cable will also work.

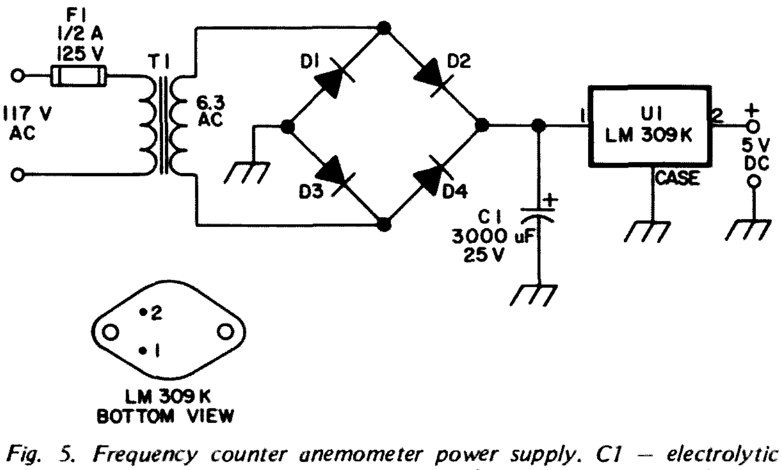

Fig. 5. Frequency counter anemometer power supply. C1 – electrolytic capacitor; D1-D4 – 1N4002 silicon rectifiers (50 V, 1 Amp or more); F1 – slow blow fuse; T1 – 117 V ac primary, 6.3 ac secondary 1 Ampere filament transformer; U1 – National LM309K 5 volt voltage regulator.

An LED as a light source should have a reasonably unlimited life span (the LED doesn't have a filament so theoretically never burns out).

The size of the rotating disc and position of the light passing aperture hole was determined as follows:

If the wind speed is one mile per hour, the air molecules must travel 5,280 feet or 63,360 inches in one hour (5,280 feet x 12 inches). Therefore if we have a small disc (friction free) driven by a cup type anemometer, it must have a circumference that would travel one mile in one hour when the wind speed is one mile per hour. If 63,360 inches = 1 mile and 3600 seconds (60)(60) = 1 hour then:

$$\frac{63{,}360}{3600}$$

would equal the distance in inches that must be traversed in one second to equal 1 mile per hour or 17.6". 17.6" would be the circumference of the disc with the light hole exactly at the edge. It is easier to construct a larger disc and drill the hole at the 17.6" circumference point. The diameter of a 17.6" circumference disc would be:

$$\frac{C}{\pi}$$

or 5.6". The radius therefore would be ½ of 5.6" or 2.8" from the exact center of the disc.

We happened to run across a "high intensity" red LED at a local hamfest and used this as the source of light for the phototransistor. Any common garden variety LED should work equally as well, as the dc amplifier following the phototransistor has plenty of gain. Of course the enclosure containing the LED/phototransistor combination must be reasonably "light tight" or extraneous sunlight will produce erratic readings.

The phototransistor used is a Radio Shack FPT-100. These sell in the neighborhood of 79¢. Of course there are many other types of phototransistors available and all are quite reasonable in price.

The FPT-100 phototransistor is capable of very fast response. It has a much faster response time than will ever be required by the anemometer trigger disc. If you want to make sure that the phototransistor is really functioning, attach a light emitting diode to an ac source such as a 6.3 ac filament transformer in series with a 1000 Ohm current limiting resistor. The 1000 Ohm resistor is a nominal value and may have to be decreased to obtain sufficient light intensity from the LED. Place the ac illuminated (modulated) LED directly in front of

the phototransistor and attach the output of the amplifier to your counter. The observed count should be 60 Hz. A more exotic method is to illuminate and modulate the LED with an audio generator. The counter should read the audio frequency directly as the phototransistor responds to the audio modulated LED. This virtually is the same as a photocell detecting audio from varying film density in a motion picture projector.

We have covered the construction of the rotating disc trigger and bearing support assembly. The next device is the rotating "cup" assembly. It is difficult to "peen" soft metal into a perfect cup shape to form the air scoops. We thought of using commercially manufactured soup ladles which are close to the desired shape. However, it seemed wasteful and expensive to hack up four perfectly good soup ladles. It finally occurred to us that L'eggs pantyhose containers are just about perfect for this application. These egg-shaped plastic containers split in half and provide two cups for the anemometer assembly. Therefore two L'eggs containers are required for the anemometer. If you haven't access to these containers, convince the XYL that these are definitely necessary to beautify her legs beyond belief and at least two pair are required should a "run" occur in one set.

The L'eggs halfshell is drilled so as to admit a coathanger wire toward the front half of the parabolic shape. Epoxy cement is used to secure the coathanger wire when inserted through the plastic halfshell. These plastic shells are weather resistant and normal corrosion will not take place. They are light and respond well to wind "excitation."

Fig. 1 is the fundamental C.C. amplifier that senses the variation in resistance of PT-1. This amplifier also provides the pulses of sufficient amplitude to drive a frequency counter. Parts placement is not critical so this amplifier may be constructed as a printed circuit or breadboard. As with any amplifier, the entire assembly should be shielded to prevent hum pickup or other extraneous outside noise.

Fig. 2 illustrates the mast attached box containing the LED-phototransistor sensor and rotating disc. The wooden box should be water and light tight.

The remaining illustrations are self-explanatory when constructing the anemometer.

What we have described is a device that will provide an interesting addition to your present frequency counter. At least it will remind you of when it is necessary to crank down your expensive 10 element 20 meter beam when the wind becomes beyond limits. ■

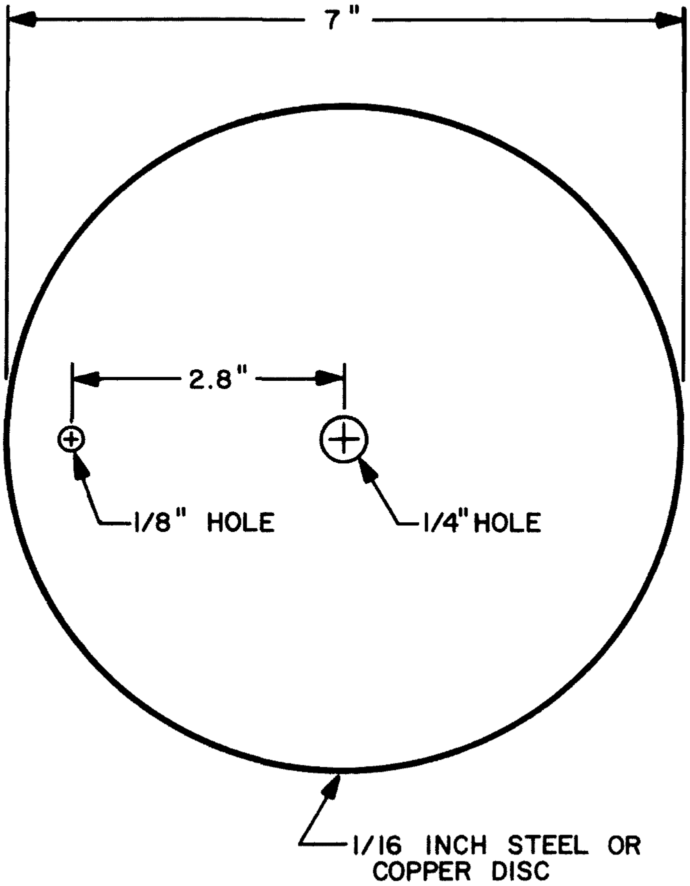

Fig. 6. Disc assembly.

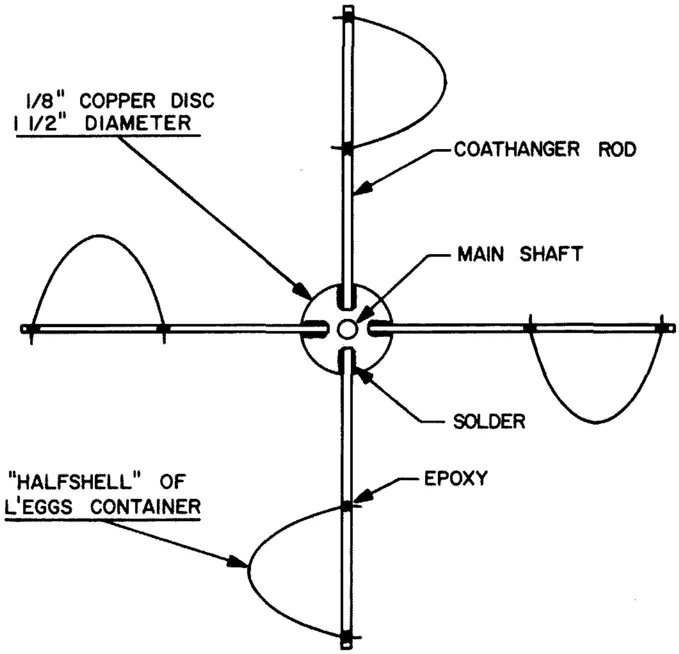

Fig. 7. Anemometer cup assembly, top view.

Stereo - A New Type of CW Filter

by
Robert L. Anderson W8KZM
391 Pleasant Ridge Ct.
Saline MI 48176

Does this sound like a familiar situation? You just installed a narrow band CW filter in your receiver and are now ready for that upcoming CW contest. Comes the weekend, and with it disappointment! Those rare multiplier contacts are still buried with strong QRM on each side. Your new filter is sharp, 400 Hz or so wide, with steep skirts on each side. However, somehow when you tune one QRMing station off on the low side of the filter, the station that was just off the high side is now S9, and the rare DX is still unreadable.

Having been in this situation myself during contests, or even in periods of heavy CW activity, I wondered if there was a way to further untangle the CW signals from each other. My particular receiver is the Heath SB-301 with the conventional 400 Hz CW filter. A still sharper filter might be an answer, but there are problems of dash-dot slurring due to the narrower bandwidth and filter ringing.

I then thought about using a pair of stereo headphones (or two speakers) together with a pair of high Q filters to channel each end of the 400 Hz CW filter passband into separate audio channels, thereby creating a "stereo" effect. It seemed to me that by doing this, it should be possible to use the ability of the brain to distinguish between the signal level arriving at each ear and to "compute" a location in space for the origin of the sound. With such a system, CW signal at 800 Hz would appear to come from the left and 1200 Hz signal from the right. Signals at frequencies between 800 and 1200 Hz would "appear" to come from various azimuth angles depending on the specific frequency as shown in Fig. 1. Tuning across the band, a signal will appear first to one side of the operator, then appear to drift across in front, and finally appear loudest in the other side before disappearing completely. By adding the feeling of spatial dimensionality to an incoming signal, it should make it far

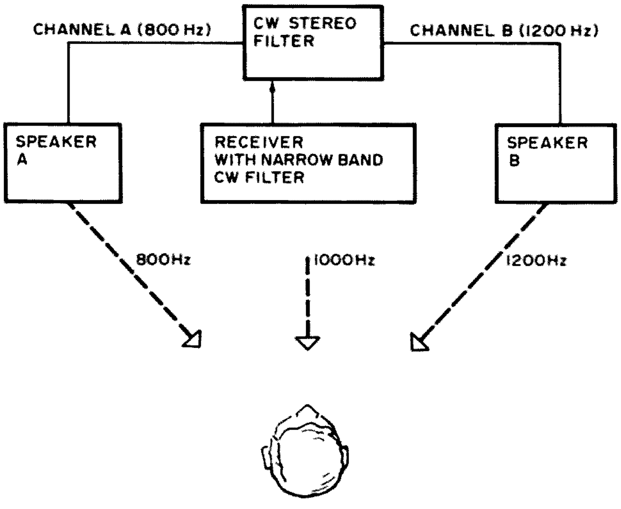

Fig. 1. CW stereo filter in operation. 800 Hz signals come from operator's left, and 1200 Hz signals from the right. Those signals in between (1000 Hz) will "appear" to come from directly in front of the operator.

Fig. 2. Filter response curves.

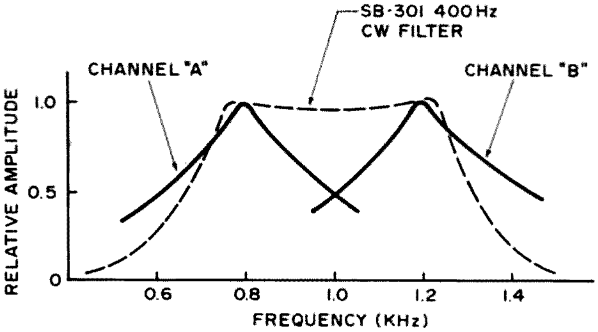

easier for an operator to concentrate on a single signal in the presence of several other QRMing signals on slightly different frequencies.

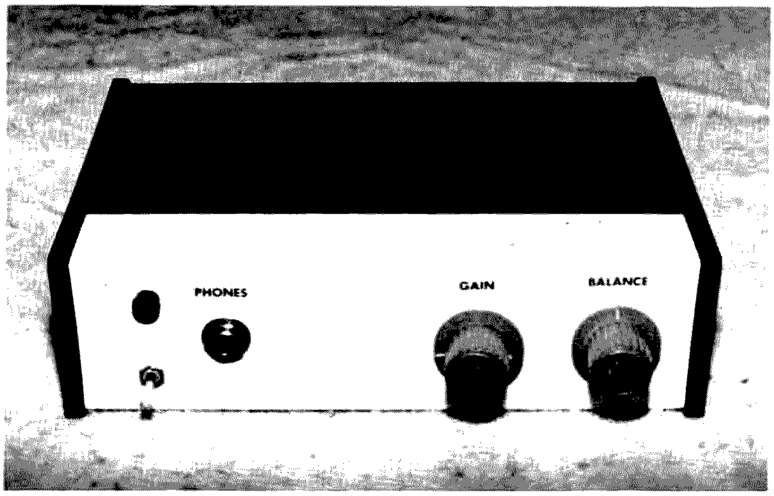

The Filter

The two separation filters were designed to have the characteristics shown in Fig. 2. One filter was designed to peak at 800 Hz, which is the low end of the passband for the CW filter in the SB-301. The other filter was designed to peak at the high end of the CW filter passband, or 1200 Hz. The Q of the filters was adjusted so that each channel will supply exactly 0.5 of its peak output signal at 1000 Hz.

The Circuit

The circuit for accomplishing this is relatively straightforward, and uses 88 millihenry toroid filters to divide signals into the two separate frequency dependent channels. The entire circuit (see Fig. 3) consists of a single LM3900 quad operational amplifier and two power transistors for active components. The first amplifier section is simply a linear preamp to assure adequate voltage levels at the filter section. The two filters L_1, C_1 and L_2, C_2 are the 1200 Hz and 800 Hz filters respectively. Two more amplifiers buffer the outputs of the two filters and drive the bases of the output transistors Q_1 and Q_2.

Since stereo headphones are generally low impedance (4-16 Ohms), some extra current gain, provided by Q_1 and Q_2, is necessary. If, however, high impedance headphones (2,000 Ohms) are available, or fabricated by rewiring a pair of standard high impedance headphones, then Q_1 and Q_2 could be eliminated. Don't forget to keep the 35 uF blocking capacitors in the circuit, however!

The 3900 Quad Operational Amplifier

For those unfamiliar with the LM3900, a few words on its design are in order since it is unconventional and understanding the principles of its use will be of help in troubleshooting the circuit. The LM3900 consists of four high-gain linear operational amplifiers in a single 14 pin DIP package. Each amplifier has a unique input circuit, called a "current mirror" rather than the conventional differential transistor pair. The LM3900 is designed to operate from a single supply. A schematic showing the connection of one LM3900 amplifier section as an ac coupled amplifier is shown in Fig. 4.

Correct dc biasing of the LM3900 is accomplished with R_1 and R_2. The amplifier output dc level is usually set to be equal to one-half of the supply voltage to give maximum ac signal swing. R_1 is selected to give approximately 10 uA of current into the positive input port, which acts essentially like the base of a NPN transistor:

$$I_2 = \frac{V_s - 0.6}{R_1}$$

With R_2 connected, the amplifier output will increase until $I_1 = I_2$, assuming amplifier saturation does not occur first. The LM3900

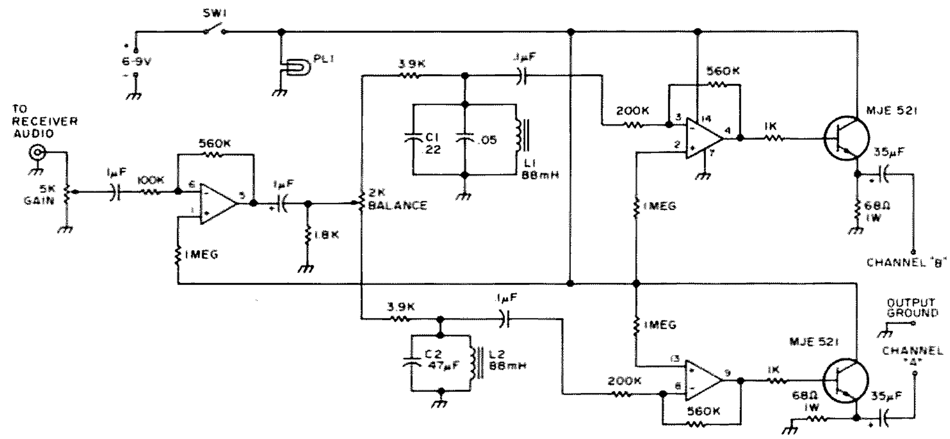

Fig. 3. Schematic of stereo CW filter. All resistors ¼ Watt, 5%, except where noted.

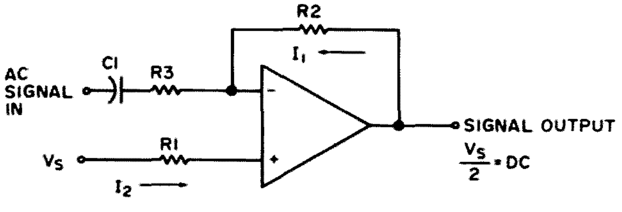

Fig. 4. The LM3900 as an ac coupled amplifier.

operational amplifiers operate on a current input balance and not a voltage input balance as do other amplifiers.

Since: $I_1 = I_2$ and $E_{out} = E_s/2$

then $R_2 \cong R_1/2$

The ac gain is set by: $G_{ac} = R_2/R_3$

And C_1 is selected such that for the lowest frequency of interest (f_{low}):

$$C_I \geqslant \frac{1}{2\pi (f_{low})\ R_3} \quad X\ 10$$

The Hardware

The circuit was built on a PC board and then mounted on a Ten-Tec Model JW-8 (6" x 8" x 2½") cabinet. The gain and balance controls were mounted together on the right side of the front panel and the power switch, pilot lamp and three circuit phone jack on the left. See photo of the unit. The circuit can be powered by either a 6 or 9 volt battery or an internal 6-9 V dc, ac line power supply. The dc current requirement is approximately 200 mA.

The Results

The initial tests of the CW stereo filter were made using a pair of 16 Ohm Utah compact hi-fi speakers spaced about 4 feet apart and 2 feet above the operating position. The results were quite dramatic! The entire shack seemed to "fill" with the sound of the receiver background noise and CW

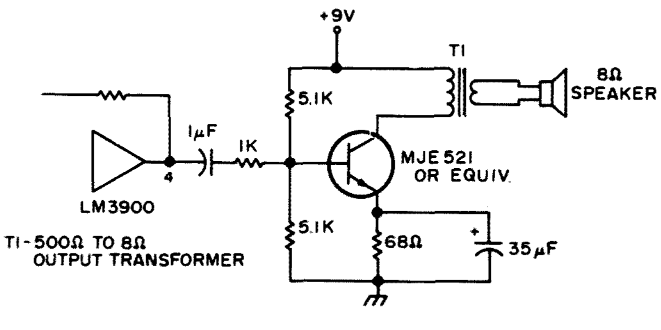

Fig. 5. Optional output stage (2 required). T1 — 500Ω to 8Ω output transformer.

signals, giving a feeling of listening depth never experienced before. Tuning across signals in the crowded portion of 40 meters, signals did indeed appear first on the left, seem to drift across the operating position and then dominate the right side. Tuning in two signals, less than 400 Hz apart, there was a definite dimensional quality to the signals. It seemed very much easier to concentrate, for example, on the W6 coming from the left and the CR6 calling CQ DX coming from the middle right hand side.

Speaker phasing is quite important, and a noticeable change in the "signal-in-the-middle" effect was noted if the speakers are out of phase at 1000 Hz. When first setting up the system, experiment with the speaker phasing by reversing the leads to one of the speakers to see which configuration produces the best "signal-in-the-middle" effect at 1000 Hz. When the speakers are phased correctly, a 1000 Hz note should appear equidistant between the two speakers, and the signal should make a smooth transition between the two speakers when sweeping between 800 and 1200 Hz. There should also be a noticeable improvement in the "dimensional" effect when the speakers are phased properly.

If sufficient sound level cannot be obtained without distortion, then a higher output driver stage, such as the one shown in Fig. 5, is recommended.

The results using a pair of stereo headphones were not quite as dramatic as with loudspeakers, yet were still quite effective. Some of the "dimensionality" appears to be lost by using headphones, yet the separation of signals into the right and left hand channels is still quite apparent. Again, some experimenting with the headphone phasing is necessary to achieve the best effect. Since most stereo headsets employ a common ground, the connections may have to be reversed inside the plug or one headphone itself.

And Some Conclusions

This circuit is, I believe, a somewhat unique approach to the problem of separating QRMing in CW signals from each other. I would be interested in hearing from anyone else who decided to try this circuit to learn what their results and experiences were.

Further improvements can no doubt be made to this initial concept. One possibility is the addition of a third center speaker channel tuned to 1000 Hz to improve the dimensional effect. This would work, obviously, for the speaker method only, unless you have somehow been uniquely blessed with three ears! Also, I can supply PC boards for the circuit described in this article for $6.00 each. ■

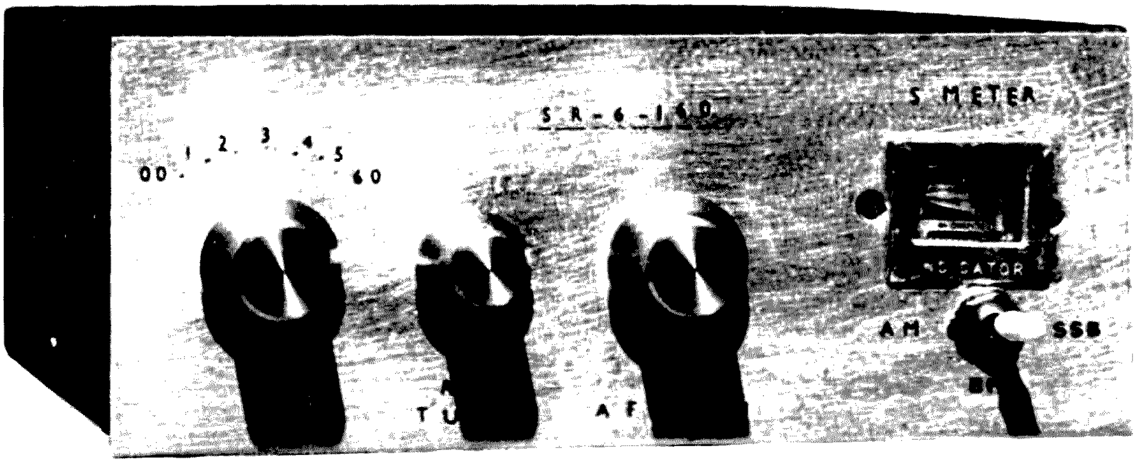

160m Solid State Receiver

by
Jim Wallich VK3ANY
154 Balwyn Road
Balwyn, 3103
Australia

Reprinted from *Amateur Radio*, The Wireless Institute of Australia, October, 1974.

It was decided to build a receiver rather than to convert a broadcast band "tranny" as it was considered that the normal cheap transistor portable would lack some essential refinements as well as sensitivity. What was aimed at was a set of such design that could be easily duplicated and therefore was not too complicated and did not require critical adjustment. Sensitivity was to be comparable to any good communication receiver and selectivity to be adequate for present activity in the VK3 area.

With these standards in mind a design which appeared some time ago in a British magazine was used as a basic format. By certain modifications and by leaving out what were regarded as superfluous refinements, an excellent "bird's nest" was produced on the bench and in due course this was drawn up and built on a printed circuit board. The final circuit is shown in Fig. 1. Tests carried out by VK3GK were so successful that the design is offered for the consideration of other amateurs.

Circuit Description

Firstly, it was decided to use germanium transistors as a number of these were available and had to be used up. Secondly, as an audio strip was also available this was incorporated into the unit although the enterprising builder can readily build his own.

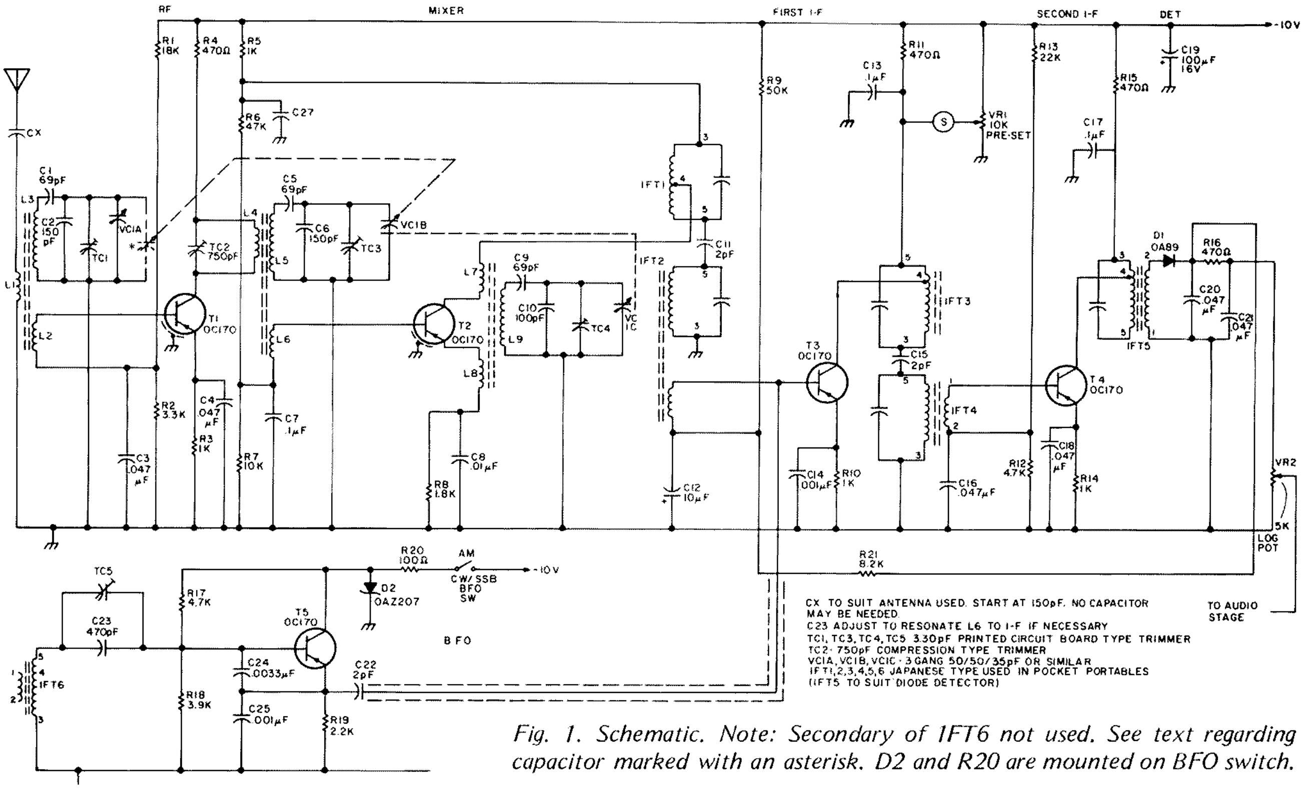

Fig. 1. Schematic. Note: Secondary of IFT6 not used. See text regarding capacitor marked with an asterisk. D2 and R20 are mounted on BFO switch.

The space on the board will easily accommodate one of the audio ICs now available. A little circuit designing is all that is required together with some modification of the PCB. A small (2½ inch) speaker could, it was discovered, be fitted to the board.

As will be seen the circuit follows conventional design. VC1A, VC1B and VC1C are ganged. Additionally, as shown, there is a small peaking capacitor across L3. This was found most useful as it compensates for any poor tracking that may occur when exact component values are not used. This capacitor may be 10 to 15 pF. It has been suggested that VC1A could be separate from the other two tuning capacitors in view of the difficulty and expense that may be encountered in obtaining a 3 gang unit. In practice such an arrangement does leave quite a lot to be desired as when it is off tune it really masks signals and consequently weaker signals may be missed. If a 3 gang cannot be obtained then one may be made up from a 2 gang and a single gang.

The IF transformers came from discarded broadcast receivers and are the small 5 pin type. It will be observed that in the case of IFT1, 3 and 5 the collectors are connected to the tap nearest to the cold end of the primaries. The resistance from the tap to coil is about 1 Ohm and the resistance from the tap to the other end is 2 to 3 Ohms. There are several different configurations for these transformers as shown in Fig. 3. IFT1 and 5 used in the receiver are type A whilst IFT3 is type B as illustrated. The constructor will have to check this point when selecting his IFTs.

At first sight the AVC circuit may appear very lightweight. However it is in fact very

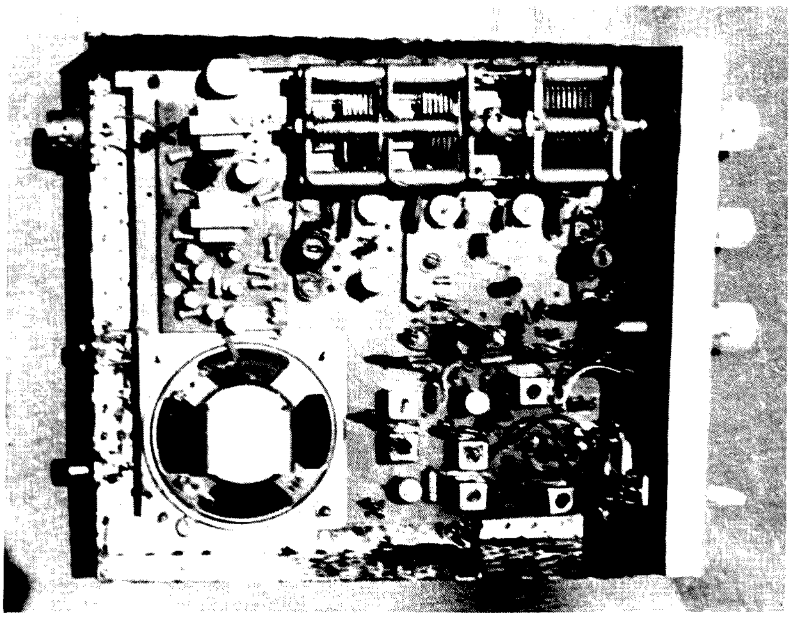

Top view, showing placement of major components.

effective and no blocking occurs even on the strongest signals. The "S" meter uses a tuning indicator/battery level indicator from an old transistor set. Even when purchased new they are cheaper than ordinary meters; they are small and give a perfectly satisfactory indication of signal strength. The meter is adjusted to read half scale for an S9 signal and zero with no aerial connected. The BFO presented quite some difficulty as it was found that the fourth harmonic of the oscillator came out on 1820 kHz. Eventually a cure was found by tuning the IF transformers to the lowest possible frequency with the aid of a signal generator. This worked out to about 448 kHz. The fourth harmonic of the BFO thus moved to 1792 kHz – below the amateur band. Consequently no screening or special care is required and the BFO works very well. The BFO uses the same type of IFT as the IF except that the resonating capacitor is removed. (Gouged out is the only way I can think of describing the operation.)

The section reserved for the audio strip can be changed to suit the builder's own requirements particularly if he makes up his own audio stage. Remember that a screened lead must be taken from VC2 at the front panel to the PCB. The –10 V supply and earth wire must also be taken to the audio strip and wires run to the speaker from the audio output. The audio strip is fixed to the PCB with nuts and bolts together with spacers. The speaker is mounted on the component side of the board so that when the board is laid copper side down the cone faces downwards.

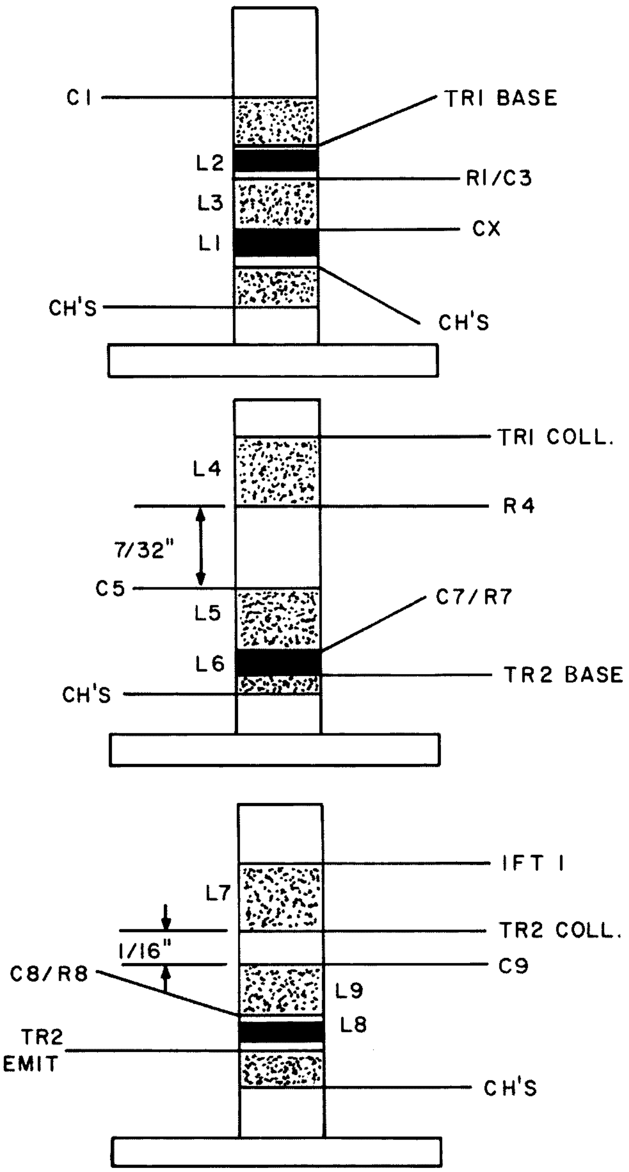

Fig. 2. Aladdin 804 formers. Coil wire #32 SWG enameled. L7 10 turns, L8 3 turns, L9 45 turns, L5 45 turns, L6 3 turns, L1 3 turns, L2 3 turns, L3 45 turns.

Construction, Adjustment and Tuning

Location of the main components on the PCB is the first step. Obviously a decision has by now been made on the ganged capacitor. Coil formers (Aladdin F804) are screwed to the board and the coil terminal pins either passed through holes in the board or soldered to pins as used on veroboard. The construction of the coils is not too critical; however, the dimensions should be followed as closely as possible. Above all ensure that the coils are connected properly. TC2 is soldered into circuit. A hole must be drilled through the board to allow the screw protruding from the underside to pass through.

Special care is necessary in drilling the holes for the IFTs. There are seven holes to each, which includes 2 for the solder tags on the can. Make all holes somewhat oversized as this simplifies the job. Do not overlook the fact that the can tags pass through holes in copper "lands" left to ensure an earthed soldering point. Wherever possible mount resistors (all ¼ Watt) in a vertical position to reduce space usage.

Once all components have been fixed in and a thorough check has been made, connect VR2 and switch on the supply voltage. DO NOT connect the BFO at this stage. Check that the current drain is not excessive and that the base, emitter and collector voltages are satisfactory. Obviously, if all is well, some kind of noise should emanate from the speaker, though this may be only a click when a screwdriver or probe is touched in a sensitive area.

If a VTVM is available confirm that T2 is oscillating. A lead brought from the antenna terminal of the station receiver to the

vicinity of L9 will give an indication if the receiver can tune around 2.3 MHz or a harmonic of this. The oscillator should cover 2240 to 2310 kHz.

Autodyne mixers can be tricky sometimes even when correctly wired. If difficulty is experienced and you are certain that the wiring has been correctly executed it will be necessary to fiddle around to get the stage to "fire." Once it does it will be a "goer" ever after and give no trouble.

Adjustment of the rest of the receiver follows standard practice, but remember what was said about the BFO earlier. Line up the IFTs using a signal generator on a frequency of 450 kHz or lower.

Injection of a signal from the signal generator in the area of L5 enables the mixer stage to be aligned. The same applies to the rf stage.

Alignment of L4, L5 and L6 together with TC2 requires some explanation. The positioning of L4 is arranged to give a limited degree of coupling. If the slug of L5 is unscrewed too much it increases the coupling to a point where oscillation occurs. Therefore once the basic alignment has been achieved, set TC3 to mid capacitance, screw in the slug of L5 practically all the way to the bottom of the coil, and adjust TC2 for maximum signal. Then unscrew the slug to peak the signal and again adjust TC2. This procedure should be followed until the stage oscillates. Screw in the slug to restore stability and readjust TC2. It should be possible to vary TC3 through maximum signal without oscillation occurring.

Initially C14 was 0.1 uF. It was found, however, that when IFT2 was peaked there was instability. By changing C14 to 0.001 uF the stage became docile.

It should now be possible to receive a signal though it may be necessary to wait for an amateur station to come on. Good results can be obtained even using a poor antenna such as a few feet of wire.

Incidentally no mention has been made of the coverage of this unit. This depends on the builder who can spread the band as much as he likes depending on (a) the capacity of VC1A, B, C, and (b) the values of CI, C5, and C9. The padding capacitor used in the prototype enabled the receiver to tune the band over about 60 degrees which is quite adequate.

The BFO may now be switched on. A VTVM rf probe at C22 will indicate whether the stage is oscillating. With the receiver tuned in to a signal generator at 1820 kHz, set TC5 to mid capacity and adjust L6 until a good beatnote is heard. Set it to zero beat. This beat should tune from high pitch through zero beat to high pitch. Check that removing the signal removes the beat as it is quite possible that the 4th harmonic of the BFO itself may be tuned if the IF frequency was not set below 450 kHz. The harmonic will still be heard below the amateur band with the correct IF frequency.

Unfortunately, there are so few SSB stations working on the band that it has not been possible to establish with certainty that the level of injection is optimum. With the coupling to T3 base there is plenty of injection available. More or less can be had by adjusting C22. If trouble does arise, C22 could be connected to T4 base or into its collector. These options are simple to experiment with but can only be tried with a regular and reliable SSB signal. This is left to the constructor.

There is only a slight tendency for the BFO to drift in the first few moments. The constructor may prefer to mount TC5 on the front panel as a BFO tuning control. As such it should have a value of about 10 pF. For the CW enthusiasts who like to vary the tone this is certainly a must.

Performance

Originally the rf transistor was an OC170. This came to grief and was replaced with an OC44 without other changes. No instability was noted during tune up so, if available, the OC44 is recommended.

As for performance it compares favorably with an FRDX400 on sensitivity. The latter is better (and I should hope so as it costs a lot more), but not to the extent that I could not work anyone that anyone else was working. Selectivity is adequate for the present degree of activity on the band. For mobile working an external speaker is used as the small inbuilt speaker is a bit "hissy" and doesn't combat noise as well. Stability is very good; even dropping it a small height does not detune a signal.

To conclude, it has proved to be reliable, effective, simple to build, rugged and easy to get going. I couldn't see myself without one. ■

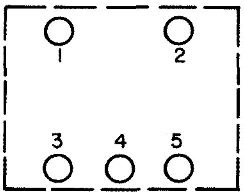

IFT VIEWED FROM BELOW

PIN NUMBER					
1	2	3	4	5	
SEC	SEC	A	B	C	TYPE A
SEC	SEC	C	B	A	TYPE B
SEC	A	C	B	SEC	TYPE C

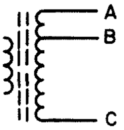

Fig. 3.

Tubes Are Not Dead!

by
Bill Pasternak WA6ITF
14725 Titus St. #4
Panorama City CA 91402

Not very long ago, there appeared in a *73* editorial a call for construction projects using tubes rather than transistors. The reason given was that many of our old time constructors don't really understand transistors that well and have thereby let the art of construction die. I personally find myself caught in the middle. My interest is basically VHF, but I am a child of the '60s transition era, the period of time in which the electron tube gave way to the semiconductor. I am also a professional TV service technician by profession, so I was forced to learn both art forms, tube and transistor, to survive in my industry. Therefore, while these days I tend to build using transistors, FETs, ICs, etc., I still do quite a bit of work with electron tubes, if only to eat!

When I entered amateur radio back in '59, I was just out of high school with little "bread" to spend on setting up an amateur radio station. I did have a good friend named Sol Rosenthal WA2MSX who was one of those "old school" radio technicians and was never too busy in his store to find the time to stimulate the ideas of this "youngster" — and answer the many questions that my mind would bring forth. "Jommie's" radio store was a veritable gold mine of old radios and TV sets, many of the former dating back to the '20s. So little "Billy," from about age 10 on, spent all his after school hours

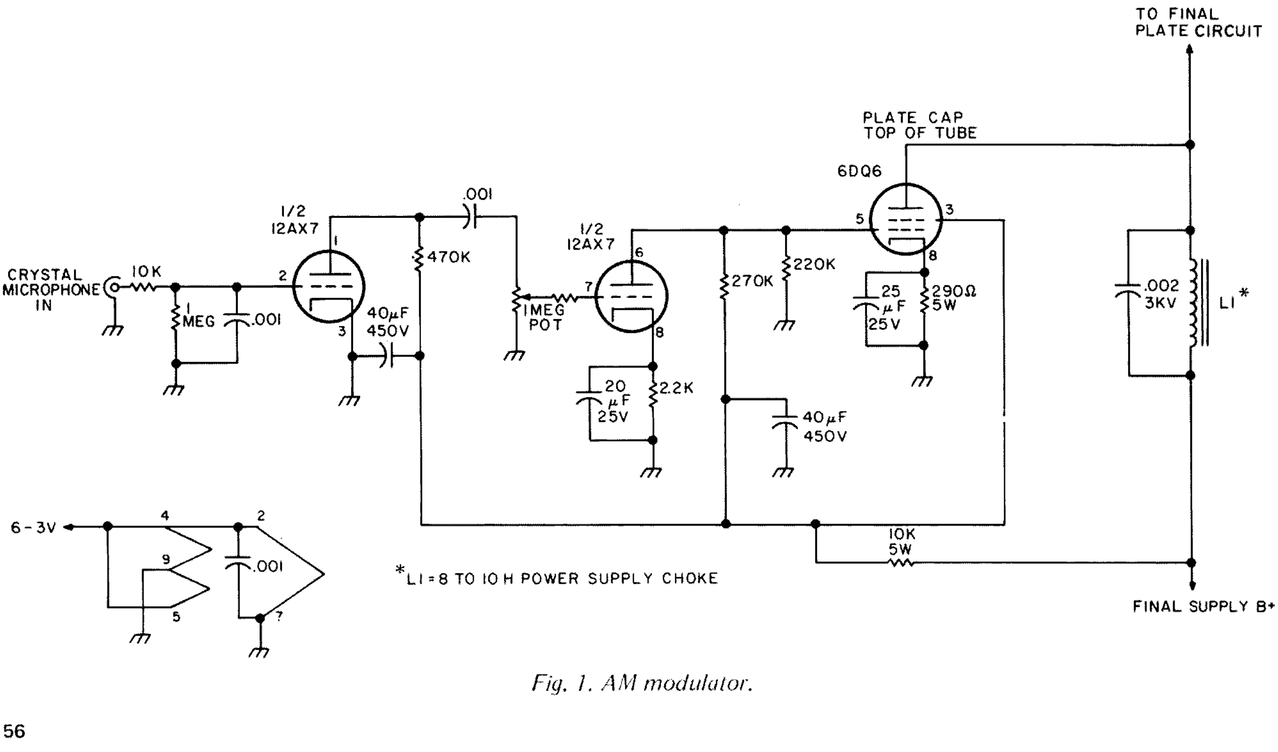

Fig. 1. AM modulator.

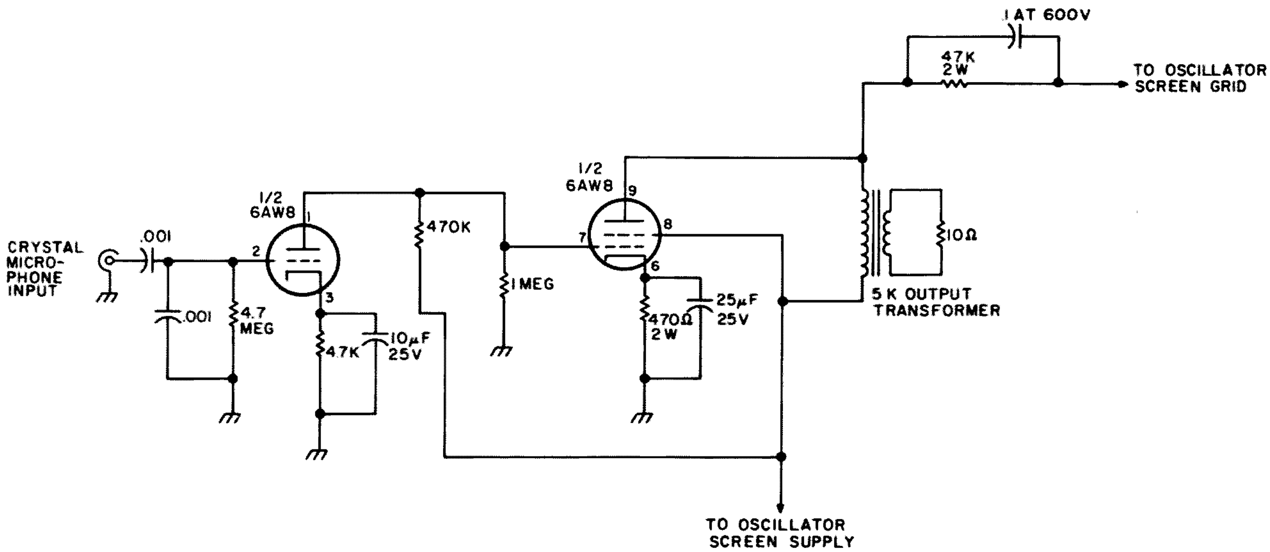

Fig. 2. FM modulator.

"hanging around" this fantastic learning spot, being educated in the true tradition of electronic repair. I was one of the lucky ones, for I received the kind of electronic education that no school can ever hope to offer. I was taught "little tricks of the trade" that have benefited me in later life – the type of education for which I will be eternally grateful.

I built my very first transmitter under Jommie's tutelage, on the side portion of his "L" shaped front counter. It was far from state of the art for the time. With salvaged parts from an old Dumint TV set, circa 1952, it consisted of a 6AB4 oscillator multiplier driving a 6BQ6 final doubler. Modulation was of the AM controlled carrier screen grid variety, using a 6SL7 speech amplifier and a 6SN7 control tube. A power transformer, 6AX5 rectifier, choke and a couple of filter caps made up the rest.

Oh, I forgot to mention, this was a VHF transmitter for six meters and amazingly enough it actually worked! Loading into a "V Beam" TV antenna through 150 feet of twinlead, it reached Orlando, Florida on its first contact – *my* very first contact!

Since that time, I have continued to build whenever the bug hits me. Of late it tends to be in the realm of solid state, but when the call went out for tube type projects, I dug back through my files to see what I could come up with that would not only fill the bill but perhaps be an incentive to help repopulate six meters, a band that is all but deserted these days. What you see here is a basic design that Larry Levy WA2INM and I came up with back around 1964 or 1965. It can be built with a number of different inexpensive tubes of the type commonly found in older tube-type TV sets, and in fact the entire transmitter less chassis can be salvaged from an old TV receiver. Just add your own enclosure, any fancy metering circuits you might desire, and package as you like. The only necessity is to follow good VHF construction technique, i.e., keep all leads as short as possible and bypass everything to ground with .001 disc ceramic capacitors. If you want to make a little larger investment, substituting a type 2E26 or 6146 for the TV sweep tube in the final will provide higher efficiency and greater power output for a given power input level. Depending upon supply voltage and final amplifier tube used, the transmitter can run up to 50 Watts power input AM or 65 Watts on FM or CW. AM modulation is accomplished by use of a beam power tetrode connected as a choke-coupled heising modulator, and FM by re-connecting this modulator to screen-grid modulate the 8 MHz oscillator tube (crude but effective; this is a low cost project) and keying the final amplifier cathode for CW. It's truly a "gut-level" transmitter with few frills.

A type 6BA6 tetrode functions as an electron coupled oscillator at 8 MHz, with the plate circuit left broadly tuned through use of a 2.5 MHz choke coil. A type 6AU6 will function equally well in this stage. The frequency multiplier is a type 6AQ5, though a 6CL6 will work better, and a 6BQ5 or 6CZ5 would also function quite admirably. The latter tube types necessitate a 9 pin tube socket and an RCA tube manual to determine pin connection. This stage is a x3 multiplier to the area around 25 MHz. In turn, the 25 MHz energy is coupled to the final amplifier tube of your choice, in this case a rather inexpensive type 6DQ6B hori-

Loading into a "V Beam" TV antenna through 150 feet of twinlead, it reached Orlando, Florida on its first contact – *my* very first contact!

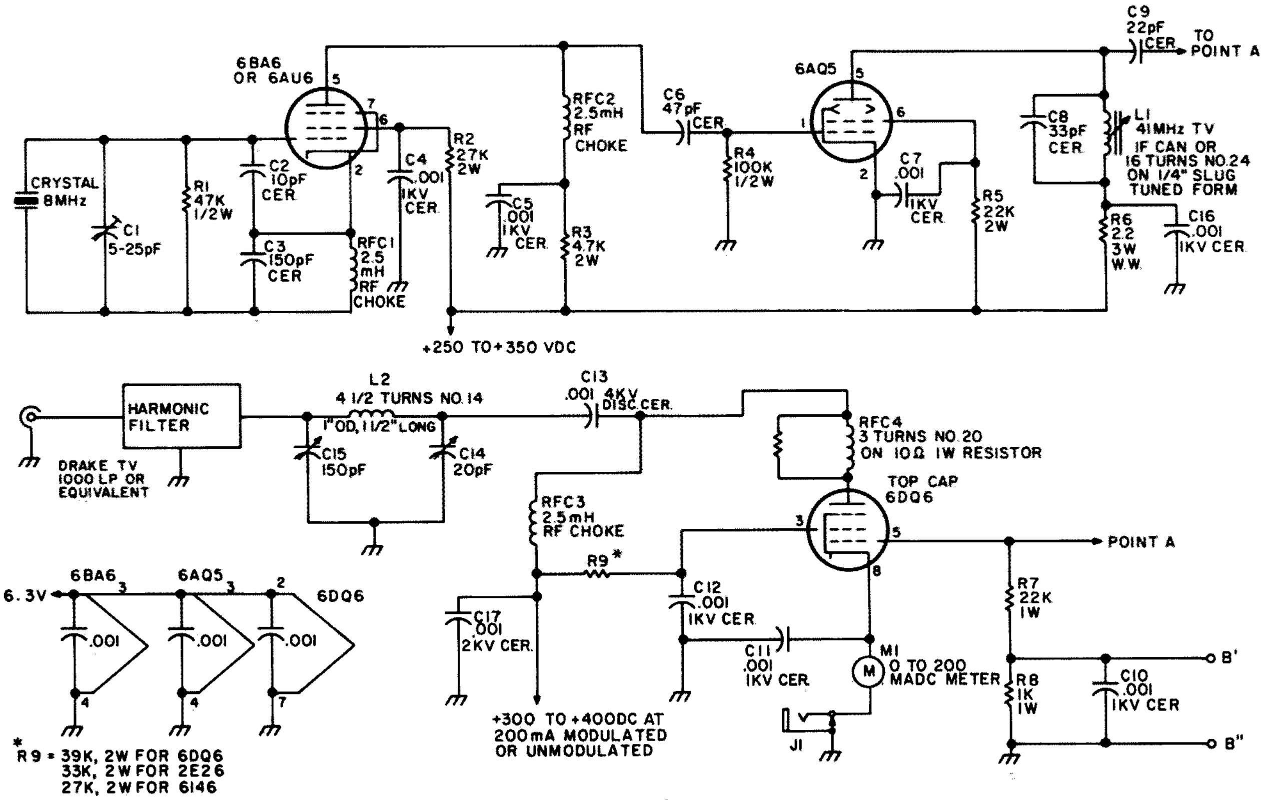

Fig. 3. Basic rf section.

zontal sweep tube. The plate circuit of the final is tuned to 50 MHz and pi-net coupled to the antenna terminals. Since the final amplifier acts as a frequency multiplier, it is quite rich in harmonic output and should not be connected directly to the antenna. A built-in Drake TV-200-LP filter works wonders here and makes it about as clean as a straight-through final running without the filter. The rf section is simple, neat and requires no neutralization. In fact, if you can get the final amplifier to self-oscillate, you had better tear the whole damn thing apart and start with a new layout. It's that stable. As to meter readings, with 275 volts applied to the driver and oscillator and about 400 volts to the final, you should run around 3 mA final grid current and 100 to 110 mA final plate current (when tuned into a 50 Ohm load). The easiest way to tune it up is peak the oscillator and multiplier for maximum grid current, then use an swr bridge in the antenna line and tune for maximum forward power. If it's working OK, maximum power output should appear at a minimum dip in plate current of the final.

For CW operation, just insert a key, flick the T-R switch to transmit and go CW to your heart's content. Since the oscillator and multiplier are running all the time, there is no chirp, and if your power supply is clean, the note will be clean and sharp.

For AM, just insert the modulator module in series with the plate supply voltage to the final, tune as noted (except keep plate current of the final below 100 mA), adjust the gain control on the modulator until the plate current needle starts to kick slightly on voice peaks, and *voila* good AM.

FM requires a bit more attention, but not too much more. The FM modulator takes the place of the screen grid resistor in the oscillator. Remove the screen resistor and insert the FM modulator module in its stead. There is no gain control on the FM modulator, but it does require close-talking the mike. Experience has proven that an extra preamp stage here leads to over-deviation. We found that 3" from the mike usually gives 5 to 6 kHz deviation, and quality is good. A frequency warping capacitor across the crystal sockets is used to zap yourself onto channel.

While many of you who are advanced in the art of design and construction may be cringing by the time you finish reading this, the others who are looking for a cheap, simple and utilitarian multi-mode transmitter for six meters may well find that what has been described here meets their needs. Best of all, if you can build at all, it will probably work well the first time you tune it up. Maybe tubes are dead, but they're far from buried. ■

Put a Pin Hole in Your Cadillac's Roof

73 Magazine Staff

Most amateurs who use 2 meters would prefer to have a ¼λ whip mounted directly in the center of the roof of their car for mobile use. Such an antenna is economical, provides a good omni-directional pattern, and usually is at least as efficient or more efficient than gain-type antennas mounted on lower positions of the car body. It also makes for a very neat looking installation. The big drawback of the mounting of such an antenna is the "hole in the car roof" problem. Commercial antennas require large holes or even multiple holes. Some methods have been described for the construction of home brew antennas requiring only a ¼" hole in the car roof. But WB2QVW has come up with an idea for mounting a whip on a car roof which literally requires only a "pin-hole" to be made in the car roof – a single hole of 1/8" diameter or even less. A mounting is used which allows the whip to be removed when the car goes through the car wash or for replacement purposes. A second alternative mounting is also described which does not allow the whip to be removed except from the inside of a vehicle. This type of mounting might be applicable to a vehicle which has a non-padded roof interior such as some recreational vehicles.

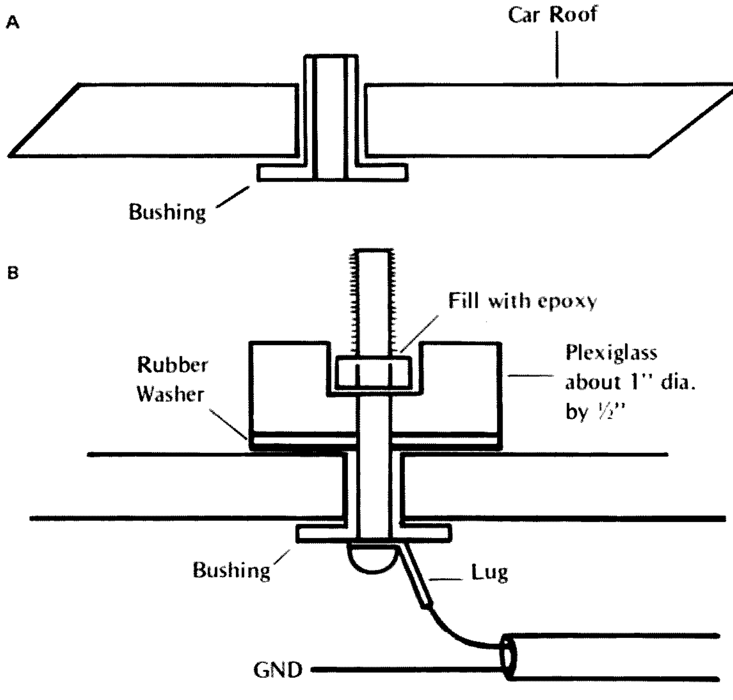

Fig. 1. The heart of the antenna mount is a fiber or nylon shoulder bushing (a). The complete assembly is shown in (b).

The electrical reason ¼λ whips can be mounted on a car roof with such small holes is that the base of the whip presents a low impedance, low voltage point so that elaborate insulation is not needed at the base of the antenna. Such mountings would probably not be suitable for ½λ antennas

which present a high impedance at their base. With a ¼λ whip and a 50 Watt output signal with a reasonable swr, the rf voltage at the base of the whip to ground should be no more than 5-75 volts. Mechanically, the simpler and smaller the antenna mount, generally the weaker it will be. Unless one lives in an area with extreme snow and ice conditions, however, the occasional replacement of the whip portion of an antenna may be a small price to pay versus putting up to a 7/8" hole in the roof of a car for a heavy duty commercial mount.

The first type of mounting is shown in Fig. 1. The heart of this mount is a thin, long plated steel bolt as shown in Fig. 1(a). A #4 (.115") bolt is probably the thinnest one would want to use although a still smaller #2 could also be tried. One may have difficulty obtaining such a bolt (1½" to 2" long) at the local hardware store; another alternative would be suitable size machine screw stock, which usually comes in one foot lengths, cut to any desired size. The bolt is inserted in a nylon spacing bushing which insulates it from the roof. An alternative is the use of a shoulder washer inside the car roof and a short fiber spacer for insulation as the bolt goes through the roof. Still another alternative is to "build" a nylon spacing bushing up from a fiber spacer and a flat fiber washer whose inside diameter matches the outside diameter of the fiber spacer. A look at the hardware assortment in a store should provide other possibilities also. Either fiber, nylon or teflon spacers/washers are suitable.

A solder terminal is used under the bolt head to provide a connection to the antenna. Another solder terminal may be used to pick up a ground point by inserting it next to the car body. Outside on the roof, a circular or cone-shaped block of plexiglass or similar material (even wood) is used to build up the antenna base. A nut in a recessed hole on top of the block secures the bolt and the recess is then filled in with epoxy. The antenna proper is secured to the stud which remains above the block. The antenna proper can consist of almost any light-weight rod material one has on hand, but a very suitable material is brazing rod. It comes in 19-20" lengths and about 1/16" diameter. It should be available at any welding supply store, or even any garage which does body repair work will have it. The rod can be soldered to a few nuts which have also been soldered together and screwed on the stud. If one has the facilities, one could machine a small part to mate the rod and stud. Still another possibility is to use a banana socket to fit over the stud and solder the rod to the socket. As a final touch, a small cone-shaped plastic insulator as found on an alligator clip should be slipped over the whip to cover the stud to provide a rain cover.

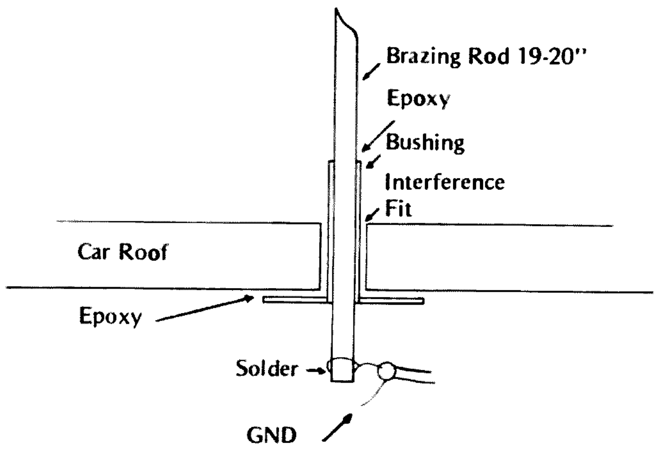

Fig. 2. The super simple mount. Total antenna cost is about 25 cents!

The whole assembly as described may sound a bit simple, but it will work very effectively and if constructed with care can look very professional. All this for a cost outlay of less than $1.00!

If one really wants to have a simple but equally effective 2 meter antenna at a total cost outlay of about 25 cents, take a look at Fig. 2. This simple antenna makes use of a brazing rod and a nylon or fiber spacer bushing (or any of the substitute assemblies previously mentioned). The hole made in the car roof need only be slightly larger than the brazing rod. As shown in the diagram, epoxy is used to secure the mounting to the car roof and the antenna rod to the bushing. This extremely simple mounting does not provide any means to remove the antenna. But for many recreational or sports vehicles which don't go through a car wash, this is not a problem. Such vehicles usually have unpadded interiors on the roof and if something should happen to the antenna, it is a simple manner to put in a new antenna at a replacement cost of 25 cents! It is assumed that one can pick up a ground connection near the antenna — by a bracing support or dome light — without having to make a hole that penetrates the car roof.

Trimming up of the antenna on a specific operating frequency consists simply of putting an swr meter in the transmission line and cutting down the full length whip in about 1/8" steps. A point will be found where the swr drops sharply to about 1.5 to 1 or less. Rather than cutting further one can make a final trim by forming a small U bend at the tip of the antenna. The value of further trimming once one gets the swr down to the 1.3 to 1.5 range is of moot value with the usual 5-10 foot transmission line. ■

The whole assembly as described may sound a bit simple, but it will work very effectively and if constructed with care can look very professional. All this for a cost outlay of less than $1.00!

A COMPREHENSIVE DESCRIPTION OF THE MICRO - SPHERE 200 SYSTEM

The Micro-Sphere 200 Series computer is the most ADVANCED, low-cost computer SYSTEM available today. Together with a TV and up to three cassette recorders you can have big computer performance at a rock bottom price.

The system features a 6800 type micro-computer with 4000 characters (4K Bytes) of internal Random Access Memory (RAM) Storage. The memory is easily expandable to 8000 total characters with the addition of an optional second 4K of RAM, with even more memory to be made available shortly. The 4K bytes of memory is equivalent to 6-8 pages of close typewritten material.

Access into the Micro-Sphere is achieved by the keyboard or from cassette recorders. The computer can display information on a standard TV screen (optionally supplied) or store information on a cassette recorder.

The keyboard uses highly reliable keyswitches to insure user satisfaction. It is full alpha-numeric including an integrated numeric key pad. The cassette interface uses the "Kansas City" standard which means that you can use even the least expensive cassette recorders with your system satisfactorily though we suggest that you do use high quality tapes with your system.

You may use your own TV without modification as the system display device, or you may purchase one from Sphere.

The power requirement is a single 110 volt AC outlet. The unit uses less power than an ordinary 100 watt light bulb. All fuses, jacks, switches, and interface signals are provided on an easy-access panel at the rear of the cabinet.

The Micro-Sphere is supplied with a built-in loading program from cassette, which is in one of the several standard or optional Read Only Memory (ROM) Integrated Circuits (IC).

ROM IC's are pre-programmed with specific non-eraseable information. This feature greatly reduces program loading time and inconvenience, ROM's also save valuable RAM storage. RAM's lose all stored memory whenever the computer power is turned off, while ROMs retain all programs indefinitely.

The Micro-Sphere is unique in that 16,384 different dots on your TV screen can form any number of pictures or designs which you have instructed your computer to display. These images can be changed by the computer program at a rate that appears as real-life movement, such as aircraft flight simulation, "walk-through" inspection of architectual mock-ups, time-lapse stock market graphic analysis, or even computer generated art forms, or space flight simulation where you can guide your spacecraft to the moon, planets or the universe.

You can experience the thrill of rolls, dives, loops, near-collisions and other types of aerial maneuvers to out wit the Red Baron in your Sopwith Camel and then the excitement of a victorious landing as you crash at the end of the approaching runway.

This same 128 row by 128 column dot matrix can form an alpha-numeric display of up to 16 lines by 21 characters. An optional graphics input device (Mouse) digitizes hand movements when moved about on a flat surface. The "Mouse" has a window and crosshairs, so it may be used for the accurate entry of maps or other graphic data.

The mouse may also be used in the place of a joy stick for flight simulation or to enter hand movements for ping-pong or other games of skill.

The Sphere Cassette Operating System (SCOS) is supplied on tape and provides Assembler, Edit, and Debugging functions to the computer when read in to RAM from the Cassette. Sub-routines for floating point and trig functions ore included in the SCOS cassette and may also be purchased as an option in ROM. Sub-routines are included in SCOS which provide all necessary alpha-numeric character generation for your TV using approximately 400 bytes of RAM. An optional character generator ROM can be purchased to reduce RAM usage to 50 bytes. SCOS also supports file handling.

If the second 4K of RAM is purchased the macro facility of the assembler is then available as an extended aid to help you in the development of your own programs. The second 4K of RAM will also allow you to read in extended Business Basic from cassette.

This basic provides 16 digits of decimal accuracy and extensions for business use. This Business Basic can make use of the Floating Point and Trig Package in RAM or ROM to expand its capabilities into the engineering field. The Business Basic and Trig Packages are available in ROM, which leaves all of the RAM storage available for applications written in the Basic Language. This is a concept for which you may pay $9,000 to get from an IBM 5100 computer.

Sphere Corp. has included in the basic price of the Micro-Sphere 200 the Monte Carlo games package on cassette, which allows you to play blackjack, roulette, and other games just for fun.

One Cassette recorder is sufficient to do everything by simply changing tapes. Multiple file handling such as inventory control, pay roll, and general ledger processing etc. will be more convenient if two or even three cassette recorders are used. For example tape #1 may contain the last year-to-date accumulation file, tape #2 may contain the present pay period account, while tape #3 is used to combine tapes #1 and #2 into a new year-to-date accumulation master file. The second and third Cassette Interface options are available for those who require them.

In the near future, Sphere will release a Programmable Input/Output Controller for use with printers, disks, and other input/output devices.

The attractive two-tone case is made of mar-resistant high impact plastic designed to fit any modern decor. Additional strength and protection to components is provided by an internal metal chassis.

The unit is designed to operate in a normal home or office environment without any extra care. The Micro-Sphere is the product of many years of experience in the micro-computer field, providing a tremendous amount of power and capability in the smallest space-it requires only a small desk with space left over, and it comes fully assembled and tested--ready to use.

LIMITED WARRANTY — This unit is warranted to be in operating condition as described upon arrival.
OPTIONAL FULL WARRANTY — For additional 10 percent of purchase price. For a period of one year following delivery of the Micro-Sphere 200, you may return the unit to Sphere for repairs or replacement if any component is found to be defective or inoperative. This warranty can be renewed each year for 5 years.
WHAT IS NOT COVERED — Power cord, fuses, damage incurred by shipping abuse, natural disaster, war or accident. Shipping, handling, postage and insurance are 2 percent in addition to purchase price.

PRICES FOR MICRO-SPHERE 200 WITH OPTIONS

No.	Description	Price/Each	Total
200	MICRO-SPHERE 200 - SYSTEM PRICE INCLUDES "A" ITEMS BELOW	$ 860.00	$ 860.00
	"A" ITEMS: 6800 type Micro-Processor unit		
	4K of Memory (RAM)		
	Cassette Loading System (ROM)		
	Sphere Cassette Operating System (SCOS) Cassette — 1 time license fee @ $137.50		
	Includes Floating Point and Trig Package — Cassette copy @ 12.50	$150.00	Incl.
	Monte Carlo Games Package (Cassette)	$10.00	Incl.
	First Cassette Interface		
	128 by 128 B&W Dot Matrix Graphics Display		
	Alpha-Numeric Keyboard		
	Attractive Mar-Resistant Plastic Case		
	Operators Manual		
	OPTIONS AVAILABLE THROUGH FACTORY INSTALLATION. * To install options after purchase is $35.00 per shipment to our plant.		
	"B" ITEMS: Second 4K of memory (RAM)	$180.00	$180.00
	Character Generator (ROM)	$25.00	$25.00
	"C" ITEMS: Second Cassette Interface	$50.00	$50.00
	Extended Business Basic (ROM) Includes Business Basic Manual	$400.00	$400.00
	Floating point & Trig package (ROM)	$130.00	$130.00
	Third Cassette Interface	$50.00	$50.00
	OPTIONS FOR PURCHASE NOT NEEDING FACTORY INSTALLATION.		
	Extended Business Basic on Cassette (Requires 2nd 4K of RAM and Character Generator in ROM.) Includes Business Basic Manual Floating Point & Trig Package	$100.00	$100.00
	9" TV for use with Micro-Sphere 200	$150.00	$150.00
	"Mouse" Graphics Input Device (Available in May 1976) 2 ea.	$150.00	$150.00
	Operators Manual (SCOS)	$10.00	$10.00
	Business Basic Manual	$10.00	$10.00
	Maintenance Manual	$40.00	$40.00
	Empty Cassette Tapes 3 for	$10.00	$10.00
200A	INCLUDES MICRO-SPHERE 200 PLUS ALL OF "A" ITEMS ABOVE REGULAR $860.00	$860.00	$860.00
200B	INCLUDES MICRO-SPHERE 200 PLUS ALL OF "A" & "B" ITEMS ABOVE REGULAR $1215.00	$1215.00	$1215.00
200C	INCLUDES MICRO-SPHERE 200 PLUS ALL OF "A" & "B" & "C" ITEMS ABOVE REGULAR $1645.00 - EVERYTHING IS IN ROM !!	$1645.00	$1645.00

ALL UNITS ARE COMPLETELY ASSEMBLED AND READY TO USE!!

SPECIAL INTRODUCTORY ORDER FORM

Item	Description	Quantity	Price/Each	Total
1				
2				
3				
4				

NAME ______________________________
please print clearly

STREET ______________________________

STATE ______________________________

CITY: ______________________________
STATE ZIP

PHONE NO. ______________________________

BANK CARD NO. ______________________________

SIGNATURE ______________________________

A. Item Purchase Total	
B. Utah Residents add 4.75% tax	
C. Postage, handling, shipping and insurance add 2% of A	
D. Full Warranty = 10% of A.	
E. Order Total	
F. Down Payment = 25% of E.	
G. COD Balance	

SPHERE generally offers 60-90 day delivery on its products, however, parts availability may delay delivery beyond that time.

Orders may be cancelled after 120 days without penalty. Spheres only obligation is to deliver the product. Introductory offer valid in U.S.A. only.

SPHERE CORP. 791 South 500 West, Bountiful, Utah 84010 Tel. (801) 292-8466

I/O EDITORIAL

uP

That's u as in micro, a P as in processor. The world of uP is changing too fast to keep in touch. Like the first really big uP chip was the Intel 8080, which came out at around $295, as I recall, and was a bargain at that price. Bill Godbout called the other day to lay our ears back with his latest deal . . . an 8080 (prime chips, he says, not seconds or rejects . . . prime), eight of the 2102 RAM memories for 1K bytes of RAM, plus a 5204 5K byte PROM . . . the works for $65. Lordy!

That should get the rest of the experimenters off their duffs and busy putting uPs together. What can you do with 4K PROM and 1K RAM plus a uP chip? Well, you sure can run a repeater to a fare-thee-well, have an extremely sophisticated keyer with all sorts of memory, and even play a lot of the simpler computer games. The fact is you have a simple computer which can be expanded with more RAM memory and some interfaces to work with slow scan, with teletype, cassette recorders, paper tape gear, etc. The only fly in the ointment is that you will have to accept that you are an experimenter and you won't for the time being find much in the way of assistance from friends or magazine articles.

One other thing . . . you are going to have to start boning up on how to program uP systems. With any luck we'll start running some articles in *73* on this. You might even be the one to write 'em.

THE GREAT COMPUTER PERIL

All is not skittles and scones (whatever those things are) when you put a computer kit together. Sure, you end up with a gadget that is more fun than a barrel of monkeys (to coin a phrase . . . say, have you ever tried out a barrel of monkeys? . . . or even one monkey? My folks had a monkey when I was younger and monkey-owning has its joys and sorrows).

Once you actually get your computer working and doing things (Herculean task, some say), it is all too easy to forget some of the goals you maybe had in mind for mating it with ham gear and succumb to the fun of putting in some game programs. The next step is all but inevitable . . . bragging to your family about it. Once you've opened your mouth you've essentially lost your computer, for you will have one heck of a job getting them to allot you some time with it . . . particularly if you have any kids between seven and forty-seven hanging around.

Look at the bright side as you are putting together your second computer. You have to admit that this is the first time you've built anything which was of interest to the family . . . and that your image has subtly altered from being just a weirdo who spends a lot of time soldering useless ham gear together and then presents his back to his family while he uses it. You may even begin to detect some slight signs of respect, however camouflaged. If you hang around behind corners you may hear your kids bragging to their friends about your wizardry. Oh, they'll still put you down at every opportunity if they think you can hear, but you watch and see.

Well, the prices on computer kits are coming down, so maybe it's a good idea to shop around and get a second one. Unless you have the good fortune to work in a chip factory, you'll probably do much better to go the kit route. The kit people are buying chips in large lots and the prices are enough lower so you'll have a tough time matching them.

YES, BUT WHICH KIT?

Hopefully we will begin to get some articles discussing the pros and cons of the various computer kits available. For many applications, there is less than a significant difference between systems based on the different microprocessor chips.

MITS got in there first and this has a lot of advantages for the home builder. A great deal of competition has built up aimed at supplying boards and peripherals for the Altair system. Thus the bus structure of the Altair has become an accepted bus standard. MITS further locked much of the microprocessor industry into their bus by bringing out their new 6800 based board using the same bus and plug compatible with the Altair 8800 system.

What's a bus? It's the wiring between all of the components of the computer. Rather than having each printed circuit board of the system plugged into the other boards as we do with most electronic systems, all of the boards plug into a common set of wires and the switching of signals is done with programming rather than real switches. It's a lot easier that way and saves on hardware as well as cabling.

Many firms are now providing kits of parts for boards which will work with the Altair system . . . memories, interfaces, clocks, etc. If you want to use a teletype machine with your computer you have to have a circuit to take the information from the bus and send it to the teletype. It has to ignore bus data intended for going in or out of memory, in or out of tape recorders, television typewriters, etc. Your interface boards only pass that information along addressed to a specific destination . . . such as a teletype . . . and they convert the information into the form needed for the unit being served. In the case of a teletype it would convert the bus info into a 20 mA series of pulses (or 60 mA if you are using a slower and older machine). For a cassette recorder it would convert the info to a series of frequency shift tones. Okay?

In selecting the kit of your choice you have a lot of factors to consider. Since all of them are pretty good, you won't really lose by throwing a dart . . . but it is possible to get a good enough grasp on what is happening to make an educated selection.

The older kits have the advantage of being much better supported with info on problems and programs. As you get more involved with computers you will begin to understand the overwhelming importance of programming. This is a new concept to most of us and we are inclined to give it short shrift. Don't. There is an awful lot to be said for a lot of software support for a system.

On the other side of the coin, newer kits are generally able to work a lot faster and have more sophisticated abilities. Progress has been extremely rapid in the microprocessor chip design field and there are substantial differences between older chips and the new ones. A dilemma. The newer chips are better, but we are going to have to wait a while before we can get much in programming for them.

One comforting aspect to this is that the above dilemma is not really of significant importance to stop you. Practically speaking, most of the expense of a computer system is in the interfaces, memories and peripherals . . . and there is no sign that we are going to have any breakthroughs in these which will obsolete your systems. You can start out with an 8008 based system and add memory, teletype, TVT, and use the wealth of data available for this older system . . . plus all the programs . . . and then change the CPU to a 6800 system and keep everything but the microprocessor itself.

One fact you are going to have to face . . . hard fact . . . programming is not going to be very meaningful to you until you have some hardware to get your hands on and learn by doing. Oh, we can explain the fundamentals of programming in articles, and then give you lots of clever ideas for improving your programming skills, but like Morse Code, you are on your own when it comes to really learning how to program.

Once you start to get the hang of programming you'll have a ball with it. With some of the systems, you can program in just about anything that you would normally expect would require switches to accomplish . . . converting from ASCII to Morse Code . . . at whatever speed you want . . . or from Morse to ASCII . . . or to Baudot. You can route the output to your rig, a repeater, lights, a teletype, a cassette recorder, door chimes . . . anything you want. You can program music generation . . . a whole bunch of people are getting off on computer music these days. You can generate

Continued on page 70

by
George R. Allen W1HCI
80 Farmstead Lane
Windsor CT 06095

What's a Computer?

Many experimenters are reticent to purchase and build a microcomputer system, even though complete systems can now be purchased for less than $100. This hesitancy on the part of interested experimenters can in most cases be attributed to several factors:

1. Temporary depletion of pocket cash.
2. Lack of knowledge of computer fundamentals.
3. Lack of personal confidence in being able to handle the technology required.

I have prepared a series of articles addressing problem areas 2 and 3 (problem 1 is only temporary!) by giving the experimenter a fundamental overview of computer principles. The various components of fundamental computer systems will be discussed, computer terminology will be explained, and fundamental, inexpensive breadboard circuits and experiments will be given in order to teach the rudiments of computer technology. The simple circuits and related experiments will give the experimenter the experience and confidence needed to build and debug computer circuitry.

The average experimenter with a basic knowledge of electronics who studies these articles and performs the experiments given should be capable of building and using his own microcomputer system.

What Is a Computer?

A computer is a device which accepts information, applies some prescribed process to that information, and supplies the results.[1] This definition can be applied to large classes of devices. For example:

1. A series of gears, shafts, axles, cables, etc., such as a speedometer, takes rotation of axle (accepts information), converts the information to usable form (applies prescribed process), gives reading of speed on dial (supplies results).

2. A frequency counter takes input pulses (accepts information), counts them (applies prescribed process-counting), displays frequency on an indicator (supplies results).

3. An amplifier takes a small voltage (accepts information), amplifies it (applies prescribed process-amplification), gives larger voltage as output (supplies results).

These three devices are all examples of "common" computers.

A "computer" is not always recognized as a "computer," and a "computer" is not always called a "computer." The term "computer" is a broad term and may be applied to common everyday devices. Computers need not be electronic, but may be mechanical, hydraulic, pneumatic, or perhaps biological.

What is a Digital Computer?

Computers are divided into two common classes: analog computers and digital computers. Both classes of computers are the same in that they accept information, apply a process to that information, and deliver results; however, they differ in the types of information which they can handle.

An analog computer processes information within a continuous range or within continuous ranges. Using the amplifier as an example, consider a simple device which will deliver a gain of precisely 100 to voltages in the range of .03 V to .08 V. In this amplifier an input of .03 V will give 3 volts out. An input of .039927 V will give 3.9927 volts out. This simple analog computer will operate with *any* voltage within its specified range. Furthermore, *all* values of voltage within the range of the device will be processed. The range of the information that the analog computer will handle is continuous – there are no gaps within the range.

A digital computer can process only discrete values (for example, in the range 1-5,

Fig. 1. Fundamental computer.

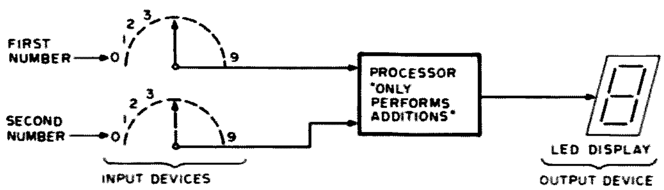

Fig. 2. Simple "addition only" computer.

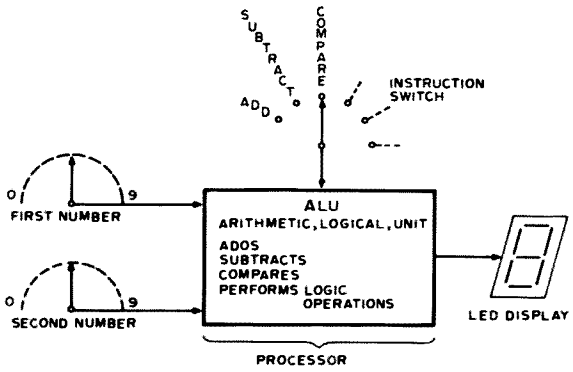

Fig. 3. Simple computer using ALU.

the numbers 1, 2, 3, 4, 5 are discrete values). The digital computer is not capable of handling continuous information. The reason for this is simple. The digital computer uses a series of "on-off" conditions to store information. The number "one" might be represented by an "on," while the number "zero" might be represented by an "off." But what about numbers such as .5? Can you have half of an "on" or half of an "off"? Certainly not very conveniently. Of course we could change our definition and let .5 be represented by an "on," but then how do you represent .55, .51, and so on? The point is that a digital computer can only handle discrete numbers, regardless of how we define those numbers. It cannot handle *all* numbers in a given range.

The frequency counter is an example of a digital computer. It accepts discrete pulses, counts them, and displays the results. In a given one second interval it cannot count 1/2, or 1/3, or .40497 of a pulse. It can count only discrete pulses.

What are the Components of a Digital Computer?

The typical digital computer may have numerous components with a rat's nest of interconnections; however, a fundamental digital computer requires only three pieces: an input device, a processor and an output device (Fig. 1).

The input device may be as complex as a graphics input terminal or it may be as simple as a single switch. The output device may be as complex as a video display or it could be a single small indicator. The processor could be very sophisticated, or it could be simple logic used to detect the simultaneous presence of switch closures.

As an example, consider a simple computer which has the sole function of adding two numbers in the range 0 to 9 together and displaying the output on an LED indicator. The block diagram of this simple computer is shown in Fig. 2.

This simple computer is a fixed function computer and can do only one function – add. The limitations of this computer should be apparent. It has a small range (0-9), cannot perform other arithmetic functions, and cannot compare two numbers for equality.

We could expand the capabilities of our processor by exchanging the simple "addition box" for an ALU (arithmetic, logical unit). This ALU type of processor is a readily available unit and offers additional capabilities such as subtraction, comparison of two numbers for equality, and logical operations such as "and" and "or." The simple configuration has now been expanded to that in Fig. 3 by the addition of an extra switch, an "instruction" switch, and by using an ALU for the processor. By varying the position of this switch, the various "instructions" could be selected. We could perform any of the allowable operations on our two "input" numbers and have the results displayed on the LED indicator. At this point, the fundamental computer has additional capabilities, but still does not have enough capability to be really practical. The ALU by itself can only process two independent numbers at any given time. It is not capable of simple steps such as adding a column of ten numbers, let alone complex problems involving many steps.

If our problem was to add a column of ten numbers, we could expand the fundamental computer still further by adding some device to store the column of ten numbers. The device could be connected to the processor in such a manner that the ten numbers would automatically be added. This storage device could be in the form of ten sets of switches, a tape recorder, a rotating magnetic disk, a series of magnetic cores or a series of electronic storage locations. A storage device in one of these classes is commonly called a memory. Note that a memory can be of several forms and is not limited to magnetic core or electronic storage. (Note: One of the earliest digital computers used a tank of liquid mercury as a delay-line memory.)

At the risk of appearing to go on and on forever, one last addition will be made to the fundamental computer system – an instruction memory. This instruction memory will serve to hold a series of steps for the processor and will give these instructions to the processor in sequence. A clock (in this example, part of the instruction memory) is used to generate pulses to step the instruction memory from one instruction to the next (Fig. 4). With this system we could command the processor to perform the following steps in sequence:

1. Add the first two numbers.
2. Add the last two numbers.
3. Compare the two sums.
4. Display the smallest sum.

Of course the sequence of commands could be endless. This simple computer system has a lot of versatility and could be very useful. (An example of this type of "programmable" computer is a programmable calculator.) The process of setting up the instructions for the computer is called *programming*. The computer as it follows the programmed instructions *executes* or *runs the program*.

A Real Life Computer

A real life computer does not differ much in logic or function from that shown in Fig. 4; however, the ALU is usually expanded to provide additional capabilities, and additional circuitry is usually provided to simplify input/output as well as to facilitate

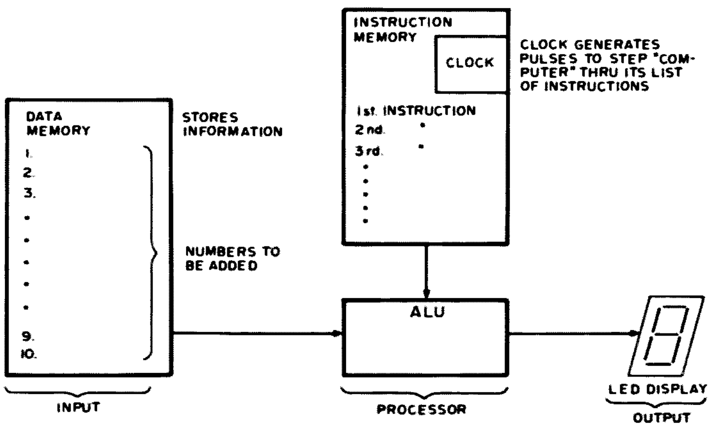

Fig. 4. Computer with memory.

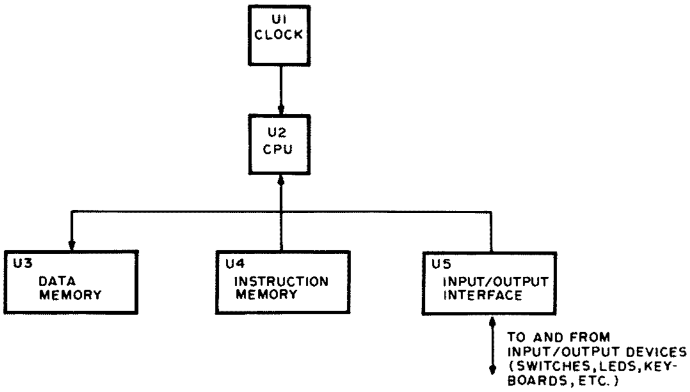

Fig. 5. "Real life" computer. U1 = 4201 clock chip; U2 = 4040 CPU chip; U3 = 4002 random access memory; U4 = 4308 read only memory; U5 = 4207 (4209, 4211) general purpose I/O.[2]

the flow of information and instructions within the system. While this last statement may sound like a "zinger," it is not, since a device called a "CPU chip" (a single integrated circuit) in most cases contains the additional circuitry as well as the arithmetic and logical functions. A CPU chip (Central Processor Unit) is a very unique and versatile device and is commonly called a "microprocessor." Fig. 5 shows a block diagram for a typical, fundamental microprocessor computer system. The five blocks shown correspond to 5 integrated circuits. This is a real life system. An Intel 4040 microprocessor system could be built using just 5 ICs.

How Do I Get Started?

It is not difficult to wire five integrated circuits together to form a microprocessor system. It is difficult, however, to make the plunge without first acquiring some important fundamental knowledge. By gathering this basic knowledge first, you can better utilize your microprocessor and you are in a better position to correct a problem should difficulties be encountered.

Fortunately, a large investment is not required in order to get into computers. For a nominal investment in a power supply, a breadboard, and a handful of very inexpensive ICs, the experimenter can build up simple computer-oriented circuits to experience firsthand just how things work. While simple circuits will not duplicate all of the functions of a microcomputer system, the experimenter will be able to perform arithmetic and logical operations as well as store and retrieve information with simple memories. If the experimenter is able to understand these basic concepts and is able to duplicate simple experiments, then he should be able to build and use a microcomputer system. Future articles will explain some of these simple circuits and experiments.

The Next Step

Man works with numbers in the decimal system, while computers work with numbers in the binary system. Future articles will discuss number systems, will explain how to do arithmetic in the binary system, and will give procedures to convert from one number system to another. Several experiments have been designed using an inexpensive ($3.95) ALU chip to illustrate binary arithmetic. Future articles will also discuss logic, memories and input/output. ■

References

[1] ***Computer Dictionary and Handbook,*** C. J. Sippl, C. P. Sippl, Howard W. Sams & Co., Inc., 1972, page 99.

[2] ***MCS-40 User's Manual For Logic Designers,*** Intel, Santa Clara, CA, 1974, pages 3-4.

I/O

from page 67

fantastic art forms by plugging into a color TV set . . . and there is a rapidly growing group of people working on computer art.

You can program your computer to compare any input against a desired data. You might tune in the Congressional Record on RTTY and set your system to check for certain key words such as Amateur Radio . . . and whenever this came up in the text your teletype would start printing.

Or perhaps you'd like to have your system switch your 2m receiver through all of the local repeaters constantly, checking for anyone sending a certain series of tones which would be your calling code. You get the picture.

CASSETTE I/O STANDARDS

One of the least expensive bulk memory systems so far available uses the garden variety cassette recorder. Those 4K and such memories in the computers are used to sort out and process data in the computer . . . the system still needs some place to store data for later use. The data may be programs to get the computer to play certain games, it might be names and addresses for a mailing list, book or record lists for an index, etc.

Eventually we will have other bulk memory systems which are reasonably low in cost. At present a floppy disk memory runs around $2000, which puts it rather in the expensive area for most home systems. A disk can hold around 250,000 bytes of memory and make it available within a few microseconds . . . good business if you are going to sort data or want quick access to random things.

Regular computer tape drives are not cheap . . . yet. They use half inch tape (usually), and cost $2000 or so, too. They can hold a lot more memory, but the time required for searching through the tape is much longer. There are some quarter inch tape cartridge systems in evolution which may be low in cost for home computers, but nothing is yet ready.

All of which brings us back to cassettes.

When I began to get an understanding of what was involved I looked to see what standards were being used for putting information on cassettes. I found, much to my horror, that there seemed to be as many standards as there were firms coming into the field. This would never do! We needed one standard for cassettes so that any program or memory cassette would work in any system regardless of manufacturer.

Since there was no one else to tackle the problem, I figured it might as well be me. I sent letters out to everyone in the industry that I knew about suggesting a meeting of everyone involved on neutral ground. I picked Kansas City because that was equally far away for everyone. I scheduled the meeting for November 7-8th.

The meeting came off right on schedule and just about everyone from the microprocessor industry turned out for it. At first the meeting got off to a very slow start and it looked as if no agreements would be possible, but (as I suspected) the spirit of cooperation won out and everyone finally got together and hammered out a standard which was agreeable to all.

The standard calls for two tones to be used, a mark tone at 2400 Hz eight cycles long for logic one and a space tone 1200 Hz and four cycles long for logic zero. A recorded character will consist of a space (start) bit, eight data bits, and two or more mark (stop) bits. The eight data bits are organized with the least significant bit first and ending with a parity bit, if used. All unused bits will be mark tones . . . e.g., the three unused bits when you are sending five level data. Mark tone will also be used in between characters as fill.

This system will give you about 47K bytes of data on a 30 minute cassette (one side of a C-60). If you use all four cassette tracks that would add up to almost 200,000 bytes. To put that in terms of an application, figure that you are putting names and addresses on the cassette. If you take 80 bytes for each name and address (which is what we use for the *73 Magazine* subscription records), this would permit you to have over 2000 names and addresses on a single cassette. That's a hefty amount of storage. If you are going to use an inexpensive recorder you would probably only put half that much on it since you would only use one track each way . . . but 1000 names isn't bad!

DO YOU REALLY WANT ASCII?

One of the questions I get a lot at hamfests has to do with when I think the FCC is going to okay ASCII for use on the ham bands. In due time I asked about this and got the news that there hadn't been a lot of worry about rushing ASCII because there had been very little demand for it to their knowledge.

It is the squeaking wheel that gets greased, to again coin a phrase. If you want to use ASCII on the bands, as what reasonable amateur wouldn't, you would do well to keep after the big candy store. Write them about it. Better, ask for "Special Temporary Authority" (STA) to try out ASCII and then get busy with it and pepper the FCC with reports on your fantastic results.

If we have to translate everything from ASCII to Baudot or Morse Code to send it we are hobbling ourselves as far as modern communications is concerned. ASCII is the standard and it should be permitted on the bands, so get busy.

by
Arny Cain WB4FDQ
2306 S. Ruffner Rd.
Melbourne FL 32901

The IC See-er

Having been a dedicated ham and/or electronic freak for upwards of forty years (I was born in 1920, so you figure it out), I feel that I can speak with some authority on the subject of home construction of electronic projects. Unlike an engineer pal of mine whose motto is, "Never build it if you can buy it," I have one which is, and has always been, "Never buy it if you can build it." I have a shop full of electronic residue to prove it – and some of it even works.

Until recently I thought that I had run into every form of frustration possible in the genre – that is, until I started (about six months ago) my love/hate relationship with the ubiquitous integrated circuit. It is my considered opinion that no invention in electronics since the galena crystal and cat's whisker (and I can remember them, so how's that for dating?) has caused as much fumble-fingered cussing and soldering iron-induced frustration as the IC. Well, since I have always wound up spending more time building the tool to do the job than on doing the job, here is a gadget that will cost you less than ten bucks to build (using all new parts), will cure all of the abovementioned evils and will take the hate out of love/hate.

Yeah, I know that there is an outfit that builds a better one, but this is for guys like me who wouldn't buy one even if we could afford the fifty bucks.

As you can see in Photo 2, I built it in a 7" x 7" x 2" aluminum chassis. The lens is one of a pair of condenser lenses from a long since defunct 4" x 5" Omega enlarger. These little tidbits are six and a quarter inches in diameter and weigh in at about two pounds apiece. I'm waiting for a seven inch plastic lens to arrive from Edmund Scientific, so I can build a new improved version and maybe sell Wayne another article.

Photo 1.

I think that it will be obvious from the explanatory photos (2, 3, 4) that a collar was fashioned (six inches in diameter by two inches deep) from scrap, medium hard aluminum, to hold the condenser lens in place in the chassis (after cutting a six inch diameter hole in same).

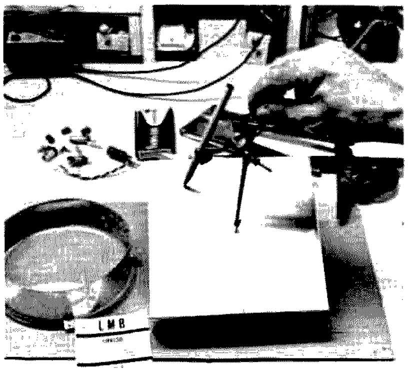

Photo 2.

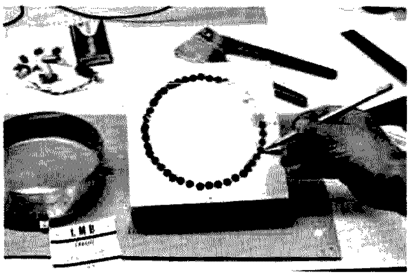

Photo 3.

Please take note (Photo 3) that I do not own a fly cutter large enough to cut a six inch circle, so I fell back on the old-fashioned method of drilling a series of small holes and chiseling away the metal between them. Since aluminum chassis are soft, it goes rather quickly, and the whole operation took me less than ten minutes using a drill

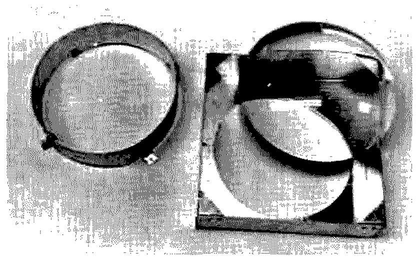

Photo 4.

press. If you have to use a hand drill it will pay you to center punch at proper intervals so that you will not mess up your nice new chassis. After you have the circle cut, a half round file will dress the rough edges easily. Before I forget, I split a piece of spaghetti tubing lengthwise and used it for an edge liner around the hole. A spot or two of glue and the pressure of the lens keeps it tight, and it makes a very professional looking finish.

I drilled holes in the sides at the point of balance and inserted three-sixteenth inch bolts and nuts for the side supports. By adding wing nuts and lock washers, I created

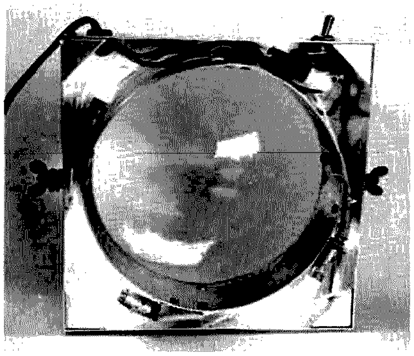

Photo 5.

an easily adjustable mount. Two pieces of 1/8" x 1¼" x 7" aluminum from an old panel were used for side supports, and I bolted them to a scrap plate of 5/32" x 8" x 8" metal that has been kicking around the shop for years. As you might suspect (and as my XYL will tell anyone who will listen), I never throw anything away, and this base is the living proof that it pays.

I must admit both that I should live in a barn and that my wife is a living, breathing saint (direct from the Old Testament) for putting up with me. Actually, the mounting of this gadget can be done any number of ways and this was just the easiest and quickest, considering the weight of the lens. Besides, I was in a hurry to finish as I had a project waiting to be soldered and I wanted to give the IC-See-er a workout.

Now for the novel lighting arrangement (Photo 5). As you can see, there are four pilot light sockets fastened at equally spaced intervals around the outside of the retaining ring collar. If you decide to go my route on this, I want to give you a word of caution right now!

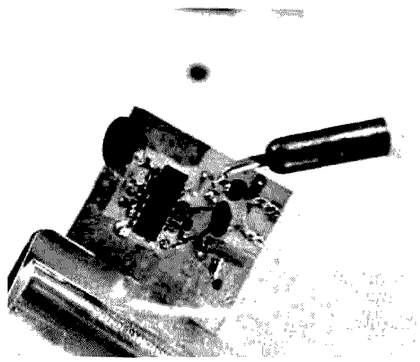

Photo 6.

Make damn sure that the sockets are well insulated from each other and from the metal collar that they are mounted on, 'cause what I did was to wire them in series and hook them across the 115 V ac line with a switch to turn them off and on. The bulbs are Tung-Sol #T313, 28 volt, bayonet base pilot lights. Twenty-eight times four equals 112 volts, and hooked across 115-120 this gives a not brilliant but very pleasant and quite adequate light for close-up work.

An additional bonus is the high-priced PC board vise (always give them a little extra for their money). It will be obvious that this added luxury feature is the really expensive item of the project, since chromed two inch

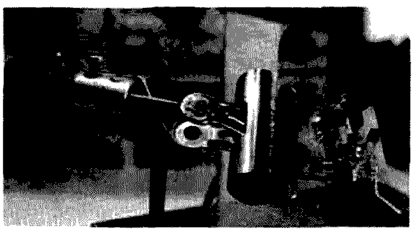

Photo 7.

Photo 8.

paper clamps are selling in our inflated economy for the munificent price of twenty-seven cents each. I splurged and bought four, so that I would have extras for a vise to hold larger PC boards. The rest of the stand is made, as is shown in Photos 7 and 8, from odds and ends of ¼" shafting and old shaft collars, plus some assorted scraps of aluminum and radio hardware.

It took me about two hours to build this little gadget and, quite honestly, every ham/experimenter who has been in the lab has tried to steal the damn thing right off of the bench, with me watching yet. Suffice to say I would not part with it for love or money.

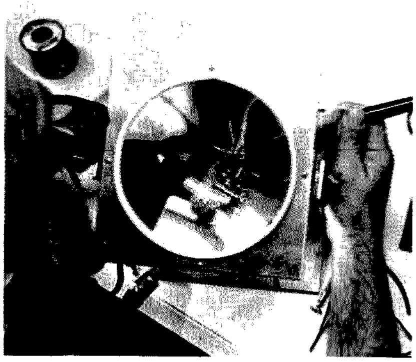

Photo 9.

The one fault it has is that I made the support legs a little short. Still, it is doing a heck of a job for me and in retrospect I don't know how I survived so long without it. I have also built myself a little device for holding my small (37 W) soldering pencil and controlling the heat of same – that no one who works with ICs should be without – but this is just a plug for another article.

Build yourself an IC-See-er and you can also wonder how you ever got along without one. ■

Build This Exciting New TVT

by
Louis I. Hutton K7YZZ
12235 SE 62nd Street
Bellevue WA 98006

About a year ago I decided to reactivate the RTTY mode of my station, and this article is a description of two of its facets: the keyboard and the television terminal. The keyboard development went reasonably well; then came the television terminal for RTTY, which I call the "RTTY TVT" for short. I immediately found that almost no data has been published on such a unit, with the closest thing being the computer TVT video readout devices. This problem was discussed at length both on the air and by mail with Dr. Robert Suding WØLMD, who suggested that I see what could be built using a low cost TVT circuit board kit designed by The Digital Group[1].

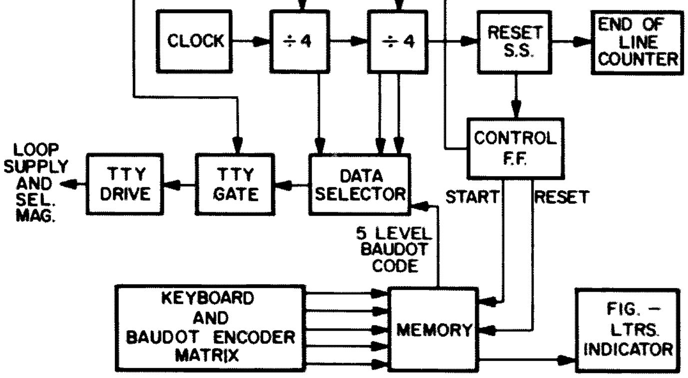

Fig. 1. Block diagram of RTTY keyboard.

PART ONE KEYBOARD

Several years ago I acquired a Model 15 Teletype machine, built up a tube type terminal unit, and enjoyed many years of operation with the green keys. This equipment was retired recently and a new project was begun to update the RTTY equipment. A 100 speed Model 28 KSR was acquired and the experiments begun. This article presents an effort undertaken to build a "solid state" version of the Model 28.

A literature search was conducted to find out what has been written with regard to the design and construction of a solid state keyboard for RTTY. A RTTY keyboard using the old RTL ICs was found in an article by Krupp several years ago, and in another by Horowitz about a CW keyboard modified for RTTY operation. Another article by Bell and Schmidt was located which presented a pre-coded message on RTTY. These articles gave me some ideas on how I wanted to design my solid state keyboard for RTTY.

The unit described in this article will permit the operator to generate the RTTY Baudot code at 60, 67, 75 or 100 wpm. It features LED indication of End Of Line, Figures or Letters mode of operation. As a result all fancy frills and extras are not provided, just a keyboard, using the 7000 series TTL IC chips. This is one of the advantages of building it yourself – no unwanted expensive extras.

Circuit Description

A block diagram of the unit is shown in Fig. 1. The clock speed is manually switch selected from 60 to 100 wpm speeds. The

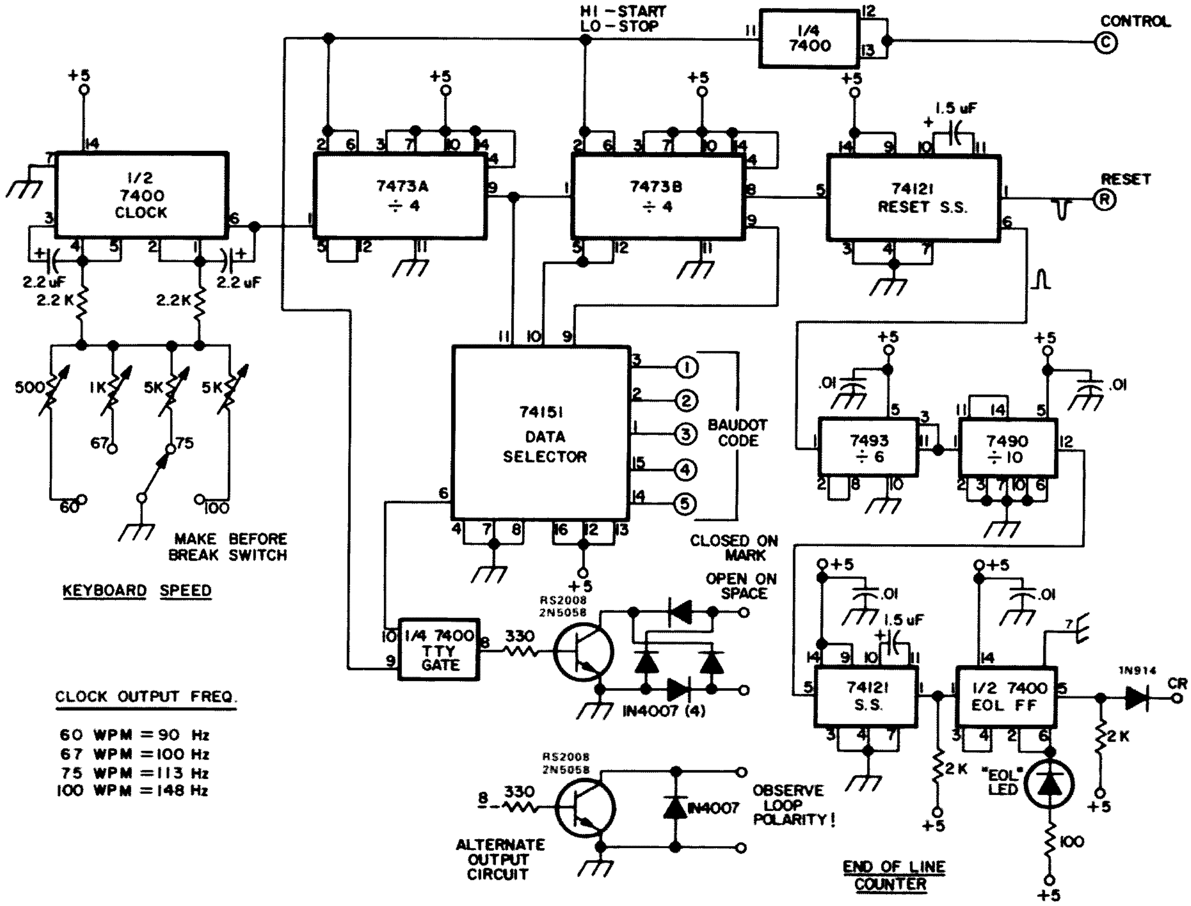

Fig. 2. Schematic diagram of RTTY keyboard.

output of the clock (90.0 Hz at 60 speed) is fed to a frequency divider chain. The three frequencies taken from the divider at 60 speed are 22.5 Hz, 11.25 Hz and 5.6 Hz. These three are fed to the Data Selector which acts like an electronic version of a TD (Terminal Distributor). When a key is depressed the Baudot code for that key is set up in the Memory flip flop via the diode matrix. The output HIs and LOs from the Memory are fed to the Data Selector. A start pulse from the keyboard is also sent to the Control FF which unlocks the frequency divider chain and the RTTY Gate. For 176 ms (at 60 speed) the frequency divider chain transmits the selected frequencies to the Data Selector which then reads out the RTTY code set up in the Memory. This code consists of a series of 22 ms pulses: one start pulse, five Baudot code pulses and two stop pulses. At the end of the pulse train the Reset SS fires and the Control FF is reset. This action clears the Memory FFs and stops the divider chain from counting any further clock pulses. The RTTY pulses are fed from the RTTY Gate to the RTTY Drive output stage which is in turn connected to a diode

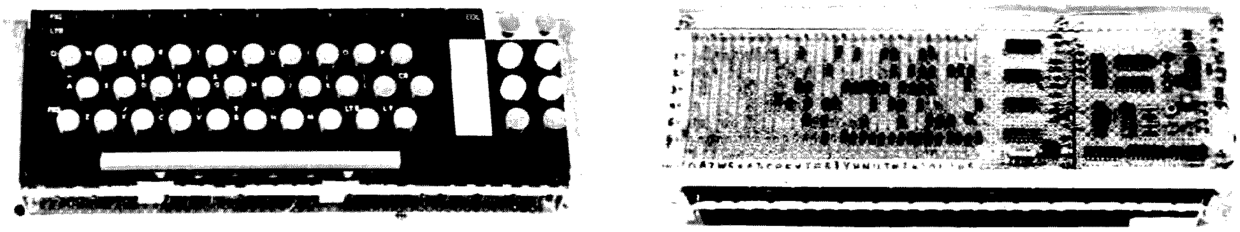

Top and bottom views of solid state RTTY keyboard.

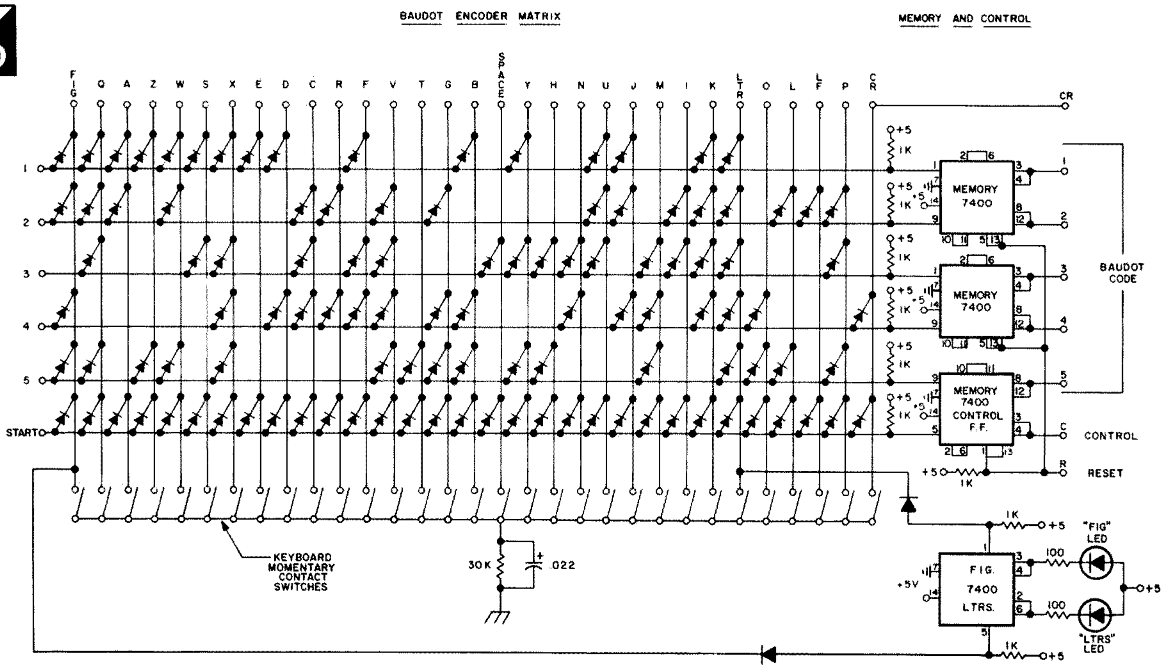

Fig. 3.

bridge permitting connection to a loop supply of any polarity. The End Of Line counter is used to indicate when 60 keyboard actions have been taken after a Carriage Return function has been keyed. This is used when the keyboard is used for driving a tape puncher. When the FIG key is depressed an FF is set and the FIG LED is lit. When the LTR key is depressed the FF is reset and the LTR LED is lit. Depressing two keys simultaneously will cause an error in the output. No mechanical or electronic means are provided in the low cost unit to prevent this event.

Construction

A surplus computer keyboard was purchased from a surplus house that advertised in *73 Magazine*. This unit uses magnetic reed switches and has plenty of extra keys for other functions that are planned for in the future. The key tops were removed and the computer markings replaced with decals of the standard RTTY upper and lower case markings. Since the keyboard already had a very nice set of numbered keys I put them on the top row, which made it not quite like a Model 15 or 28 but a bit more like a typewriter. Again, with home brewing you can make it to suit yourself.

Two metal rails were formed and attached to the bottom of the keyboard unit on metal spacers. A long piece of perforated fiberglass board 4" by 8½" was fitted in between those two rails as seen in the photographs. The diode matrix, Memory, Control FF and FIG/LTR FF were mounted on that circuit board. This configuration permitted me to conduct circuit design and debugging on a second small board containing the remainder of the circuits. The second board is 4" by 3¼". If one wishes, a board 11¼" long by 4" wide could be used for all the circuits, now that the unit has been designed. The ICs are fixed, mounted and hardwired into the circuit. Since this is not a production item no effort was made to design a PC board.

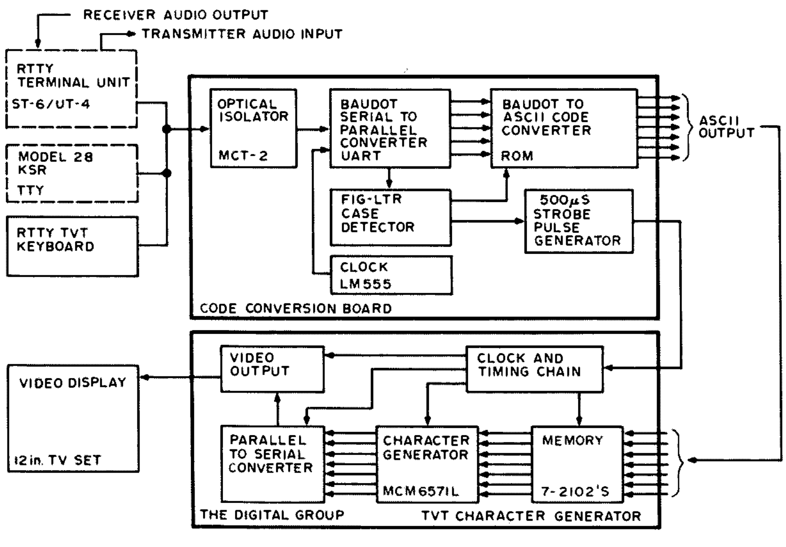

Fig. 4. Block diagram of RTTY TVT.

Testing

The long circuit board was wired first, and a manual jumper was wired from the keyboard key grounding capacitor and resistor to test out the diode matrix and memory before wiring keys in the circuit. A jumper was wired from the reset line on the memory that was momentarily grounded to reset the memory. The wire from the key circuit was touched to the selected diode matrix letter and then the five Baudot output lines were checked for proper high and low states. Each diode in the matrix represents a mark or high state. The absence of a diode represents a space or low state.

The diodes used in the matrix were of the fast switching type used in computers. I used some obtained from Radio Shack which carry their part number 276-114. They come in a bag of 50 each and must be tested.

When checking out the small circuit board the first thing to test is the clock. I monitored the pin 1 of 7473A to see if the clock was oscillating in each position of the speed selector switch. That switch must be of the make-before-break type for proper

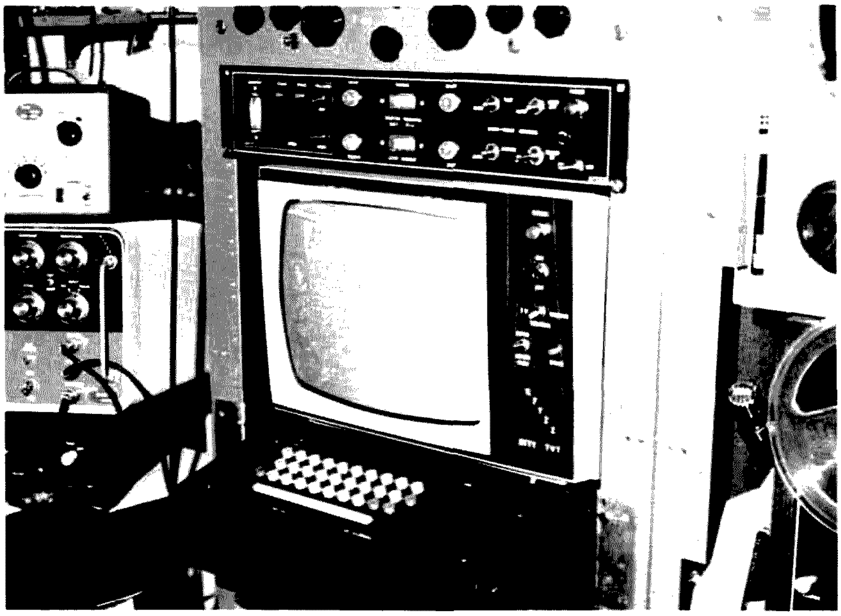

The RTTY TVT.

operation of the clock. Each adjustment pot was set to give the proper speed according to the chart on the schematic. At 60 speed, 90 Hz should be appearing at pin 1 of 7493A, and with the control line high at pins 2 and 6 of each of the 7493s you should get 45 Hz at pins 5 and 12 of the 7493A. Pin 9 should be 22 Hz. Pins 5 and 12 of the 7493B should be 11 Hz, and pin 8 of the 7493B should read 5.5 Hz. A negative going pulse of around a half a millisecond should be seen reoccurring each 176 ms on pin 1 of the 74121 Reset SS. With a temporary ground on pins 2 and 15 of the 74151, the output as monitored on pin 6 of the 74151 should read low, high, low, high, low, high high, repeat, etc., in a serial bit stream. If a temporary ground is placed on pins 2 and 6 of the two 7473s the bit stream should stop. If all works OK at this point, then remove all the temporary wiring and wire the board in the circuit with the encoder board.

As a final test I wired the output in series with the loop supply and printer magnets of my Model 28 KSR and was able to type out a copy on a local loop using the keyboard and the Model 28 printer at 100 speed. I ran into some noise problems and had to add some power bus bypass condensers on several of the ICs, and these are so noted on the diagram.

This unit was a very interesting project and it was a very good feeling when I finally got it assembled and running with my printer. The circuit development took several months of breadboarding to get all the various parts of the unit tested before tying them all together in the finished product. I wish to thank Mr. John Small and

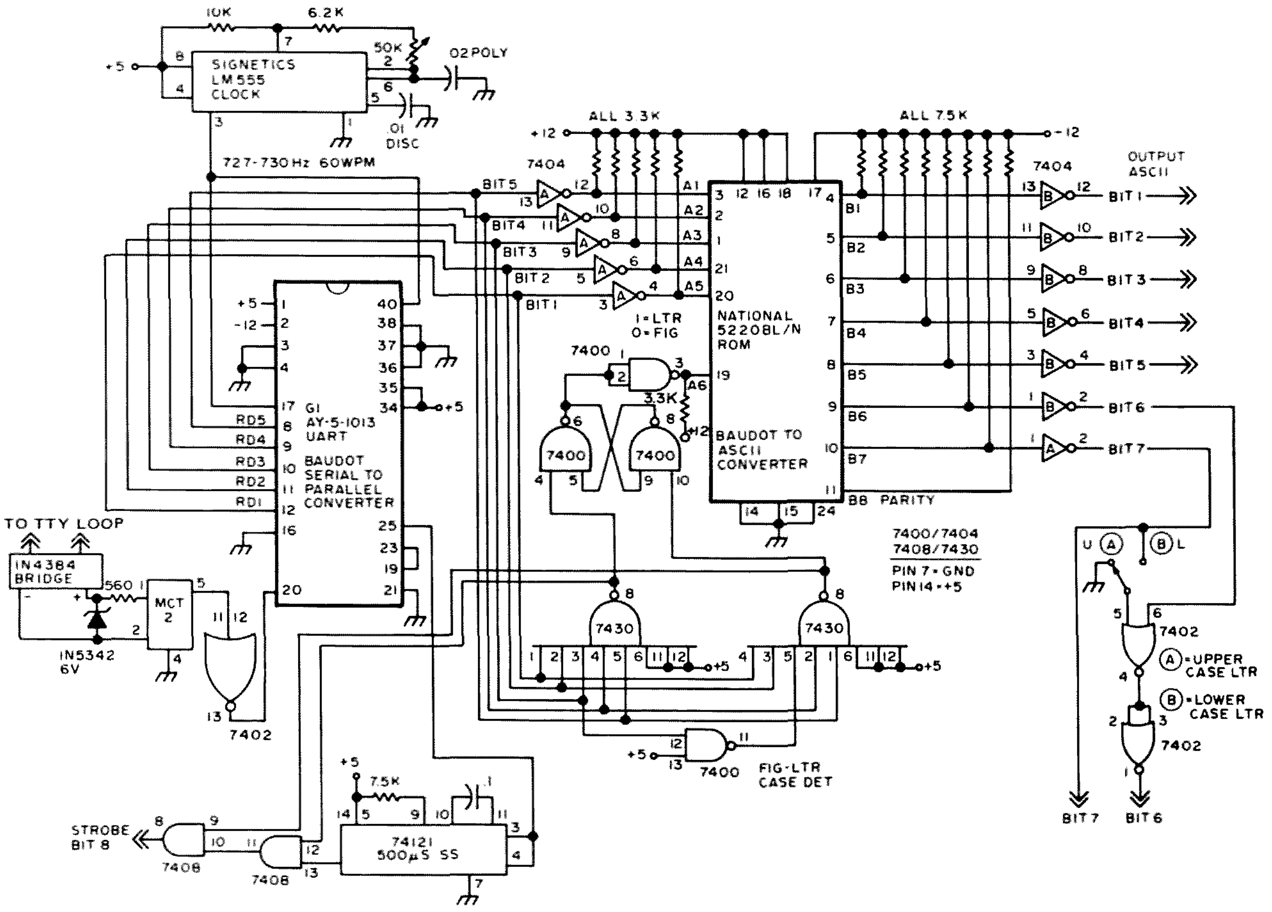

Fig. 5. Baudot to ASCII TTY code converter. Note: If FIG-LTR state on pin 19 (5220 BL/N) is incorrect, rewire 1-2-6 of 7400 to 1-2-8 of 7400.

Mr. T. Jackson who were most helpful in keeping my thinking straight as I developed this unit.

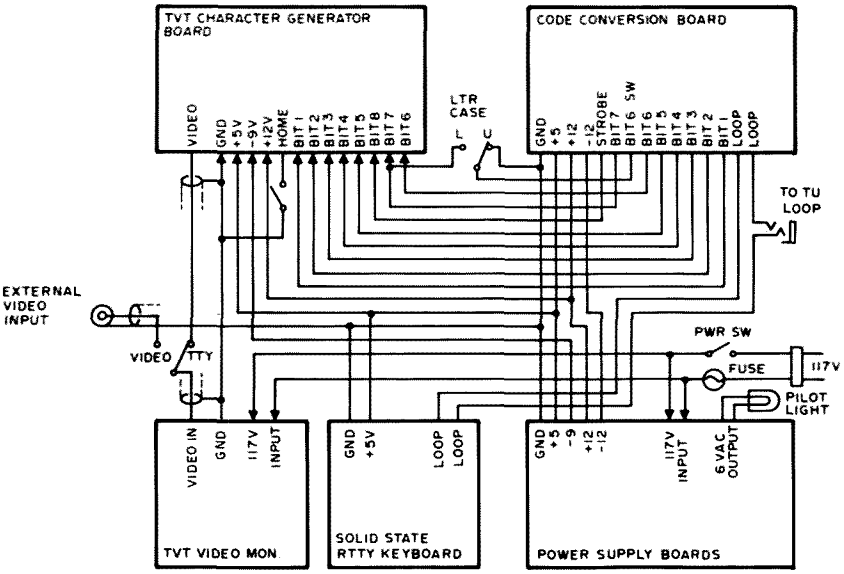

Fig. 6. Intercabling diagram.

PART TWO
TELEVISION TERMINAL

There are two approaches to getting that RTTY signal on a TV set. One way is to make the keyboard output the ASCII code so that it could talk to the TVT without any conversion. This method also requires both send and receive code converters to get the Baudot code converted over to ASCII to be compatible with the display. Also, when you send from your ASCII keyboard it must be converted to Baudot so the other chap's machine can print the message. The second approach is to use a keyboard that only sends in Baudot and make only one conversion from Baudot to ASCII so that the TVT could read the incoming signal from either the keyboard or the terminal unit. This is the approach that I used, and the results of my efforts are described here.

This unit includes a surplus keyboard rebuilt to include a diode matrix for encoding and generating the Baudot code at 60 wpm. The output of this keyboard is used to key the ST-6 loop and the TVT through a code converter board. This circuit board converts the Baudot encoded bit stream coming from the ST-6 or the keyboard from serial to parallel Baudot data. The parallel Baudot data is then converted into parallel ASCII data and a strobe pulse is added to trigger the TVT display circuit. The parallel ASCII is fed to the character generator circuit board and onto the TV screen. The display has eight lines of thirty-two characters per line. When the last character is printed at the bottom right-hand side of the screen the printout returns to the upper left and erases the existing character and prints the new one as it progresses across the screen line by line.

A HOME push-button switch is provided that will return the writing beam to the upper left-hand corner of the screen. An upper and lower case letter selection switch is also provided as that feature is available in the TVT circuit board by The Digital Group. Since this board was used in a microprocessor computer terminal, it has Greek notations which cause some glitches in the Baudot scheme of things. These were most troublesome in the FIG and LTR modes. The code conversion board has circuits incorporated to tell the character generator to ignore those key functions in the Baudot system. All other frills and extras were left out of this terminal to keep the cost down. It is estimated that one could probably be duplicated for anywhere from $250 to $350 depending on how many surplus components were used.

Circuit Description

A detailed description of the design and operation of the keyboard has already been presented. A block diagram of the RTTY TVT is shown in Fig. 4. The input to the code conversion board is made to the ST-6 loop circuit through an optical isolator to keep the loop high voltage from the five volt TTL circuits. An UART (GI AY51013) is used to convert the serial Baudot to a parallel Baudot output where it is fed to the input of a code converter ROM. The clock (LM555) for the UART is set for 60 wpm speed (727 to 730 Hz). In the code converter, a National 5220BL/N ROM, the Baudot code is changed to the ASCII code.[2] A figures-letters function detector is used to tell the code converter to include either bit 6 or bit 7 in the ASCII code output. The case detector is also used in conjunction with the strobe generator to eliminate the Greek letter that would normally appear on the TV screen when the FIG or LTR key is touched. A strobe of at least 500 microseconds is required at the end of the generation of each character on the TV screen. The strobe generator is triggered by the output of the UART transmitter section.

The ASCII output, along with the strobe line, is connected to the TVT character generator board. The video output from the TVT board is connected to the video input of a modified TV set. To prevent the TVT display from returning to home position after every time a CAR RET is keyed, IC30 (7430) is removed from its socket. A 2.2k pull up resistor is connected between pins 8

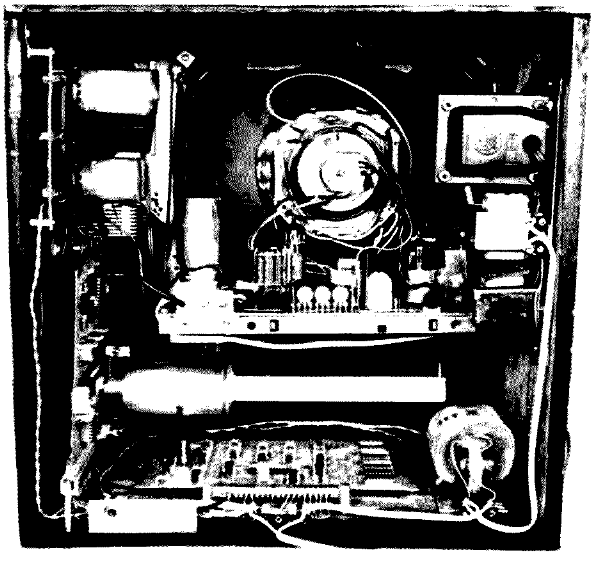

Internal view.

and 14 of the IC30 socket. A wire is run from pin 8 of IC30 socket to pin 14 of the PC board connector. This is the reset "HOME" terminal. When this terminal is grounded momentarily via a push-button switch it drives the write beam of the CRT to the beginning of the first line on the display. This is the only modification required to The Digital Group TVT circuit board to get it working as a RTTY TVT circuit board. The video readout of the RTTY TVT unit is a salvaged 1969 Sears 12" portable TV set. This set came from a junk yard, and to put it into use as a video monitor all the circuits were removed except the sweep, video and high voltage. It makes a very acceptable video monitor for this application.

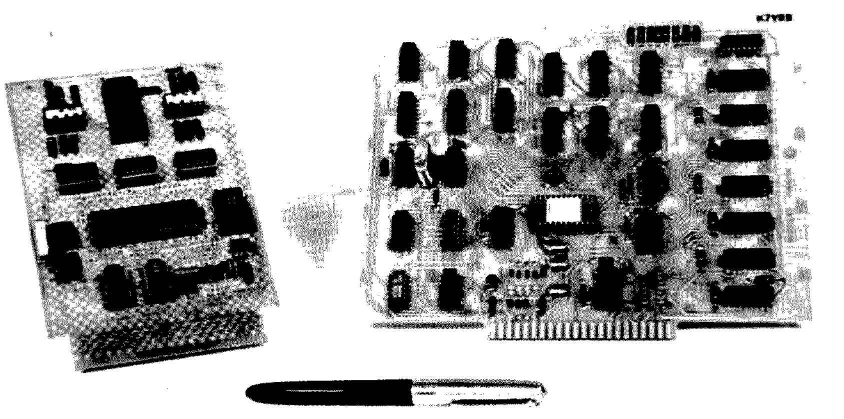

The two PC boards.

Construction

The cabinet for the RTTY TVT is constructed from plywood and is 15" high by 15" wide by 15" deep with about 4" sticking out in front to house the keyboard. The outside of the cabinet was sanded and given two coats of shellac. The edges of the cabinet were painted a dull black. The remainder of the exterior of the cabinet was covered with simulated wood grain sticky-black plastic covering obtained from a hardware store. This makes a really nice looking cabinet. The panel holding the keyboard was also covered with this same simulated grain material. A metal panel was fitted over the holes left by the removal of the TV tuners and controls, and was covered with the simulated wood grain material.

The power supplies were constructed from surplus parts and are mounted by metal standoffs to the inside of the cabinet. The circuit board containing the code conversion circuit is 4½" wide by 6" long. The TVT readout board is 8" wide by 6½" high. A diagram of the code conversion board is shown in Fig. 5. The overall intercabling diagram for the RTTY TVT is shown in Fig. 6.

The conversion of the 12" TV set for use as a video monitor required considerable time as the set was in pretty bad condition. The filaments of the four tubes used were rewired so that they would work from lower voltage circuits. I did not want to run the thing from the power line direct like it was originally wired. I used a small isolation transformer to supply the 120 volts for the power supply input. I found that both the yoke and flyback transformers were defective and had to be replaced using parts from other discarded sets. Fig. 7 is a schematic of how I accessed the input to the video amplifier of the rebuilt set. The original set used a tube to rectify the high voltage to the picture tube and I replaced that with a solid state high voltage rectifier removed from another junk set. This helped to further lower the current drain on the set. The front part of the old set's cabinet formed the front of the TVT unit. It was attached to the plywood cabinet by handmade metal brackets. The panel to the right of the picture tube contains all the controls for operating the RTTY TVT. These are the pilot light, power switch, video monitor or RTTY monitor selector switch, upper case-lower case letters selector switch, and the HOME switch. The CRT brightness and contrast controls were mounted on a small metal plate fastened to the rear of the TV chassis. They are set once and left that way.

Test and Checkout

Since I was developing many of the circuits to put this thing together, I ended up by running all sorts of tests during that time. Many of them are not needed for someone essentially duplicating this circuit. When the code conversion board is finished, the input to the board should be connected to the output of the keyboard and the ST-6 or terminal loop supply. This way you can send Baudot encoded characters to the board one at a time to see if they are being encoded properly at the output of the board in the ASCII code. The clock must be set for an output frequency of from 727 to 730 Hz as measured at pin 3 of the LM555 (60 wpm). Each time a key is depressed on the keyboard a pulse of approximately 500 microseconds should appear at pin 8 of the 7408 gate. There should be no pulse appearing at that point when the FIG or LTR keys are keyed. A "high" or 1 should appear on pin 3 of the 7400 when the LTR

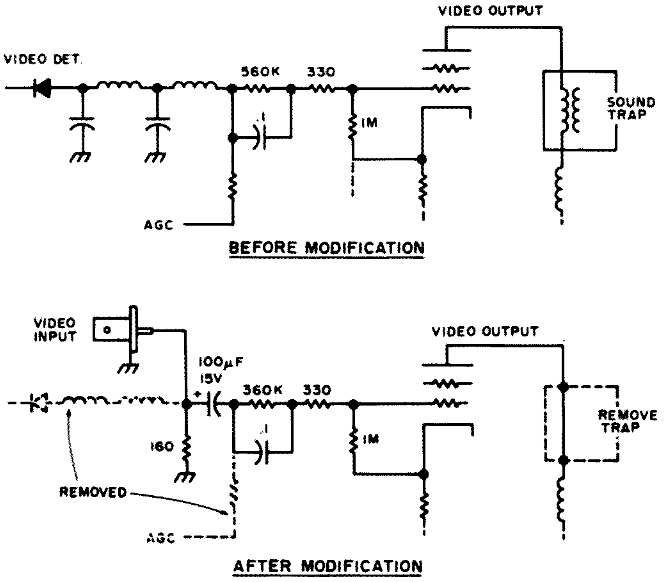

Fig. 7. Video input modifications to 12" TV set.

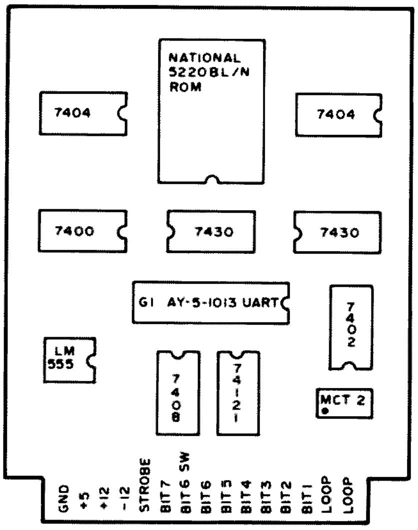

Fig. 8. Major parts layout, Baudot to ASCII code conversion board.

key is depressed, and a "low" or 0 should appear on pin 3 of the 7400 when the FIG key is depressed. Pin 5 of the 7402 should be temporarily grounded so that the output of the code converter may be checked.

Key in the letter A on the keyboard. Now look at the output of the board and bit 1 and bit 7 should be high and all other bits low. Now try the letter R on the keyboard. Only bits 2, 5 and 7 should be high on the ASCII output. Now try the letter Y and the ASCII readout should have 1, 4, 5 and 7 high. Now key the FIG key and then the number 2. The ASCII output should have only 2, 5 and 6 high. On FIG operation bit 6 of the code is used and on LTR bit 7 is used. If at this point you are getting this kind of response on the ASCII output you are in fine shape. The next thing is the character generator circuit board.

The circuit board data furnished by The Digital Group with their TVT character generator gives very detailed step by step instructions on how to check out their board and will not be repeated here in this brief article. I had an old 1950 Admiral TV set that I had previously modified for use as a video monitor with a camera for fast scan to slow scan conversion construction project. I used this set to test out the TVT board and to check out the system from keyboard through the code converter through the TVT board and onto the TV set. This way I was sure all bugs were worked out before I mounted the parts in the cabinet. The TVT circuit board performed as designed with only a slightly defective memory chip giving me any problem. This bad chip caused the wrong character to appear in certain lines on the screen. When replaced by the vendor it worked perfectly.

When connecting the input of the RTTY TVT into my ST-6 I had a polarity problem and had to reverse the input leads to the RTTY TVT to get it to print properly. This was the only interfacing problem encountered. I have my Model 28 KSR wired in series with the loop driving the RTTY TVT and if I want a hard copy I just turn on the power switch on the machine motor and the copy is printed.

I would be interested in hearing from those who decide to build one of these RTTY TVT units and will try to answer any questions they may have about the machine. All I ask is that they include an SASE. 73s and good printing on your CRT. ■

References

1. 256 Character Display Kit, The Digital Group, P.O. Box 6528, Denver CO 80206.
2. *TTL Cookbook*, Don Lancaster, 73 Radio Bookshop, Peterborough NH 03458.
3. "RX for the RTTY Bug," Louis Hutton, *73 Magazine*, February, 1962.
4. "Attache' Case RTTY," D. Krupp, *QST*, February, 1968.
5. "Perfect Teletype at Your Fingertips," P. Horowitz, *QST*, October, 1968.
6. "A TTL Message Generator for RTTY and CW," J. Bell and F. Schmidt, *QST*, November, 1973.
7. "TV Typewriter," Don Lancaster, *Radio Electronics*, September, 1973.
8. "TV Typewriter II," Ed Colle, *Radio Electronics*, February, 1975.
9. CT-1024 Terminal System, Southwest Technical Products, 219 West Rhapsody, San Antonio TX 78216.
10. "The Scopewriter," Gary Steinbaugh, *Popular Electronics*, August, 1974.
11. RVD 1002 Visual Display System, Hal Communications Corp., P.O. Box 365, Urbana IL 61801.
12. "Television Interface," Don Lancaster, *BYTE Magazine*, October, 1975.

by
David J. Brown W9CGI
RR 5 Box 39
Noblesville IN 46060

Magic Fingers for RTTY

If you have speedy fingers, never have RTTY problems (ha!), or have built your last perfect RTTY AFSK unit and have it all tuned up, more power to you. If, however, you are like most of us and have two thumbs per hand, a Model 19 that periodically has spasms of TIN-GT's (this is not *&#% going to's), or ever experiment with building new ideas in AFSK gear, you can sure use the item I am about to describe.

I think the circuit to be described, when coupled to a tone source, is the handiest gadget I have ever built for RTTY. It gives you any RTTY character or the RY test combination automatically repeated over and over. While you can use various tone sources, from a modified AFSK sending unit to the new tone generators like the 566 IC that is TTL compatible when run correctly, I highly recommend using the very accurate and stable tone source described in an article by Dr. Robert Suding WØLMD in the July 1975 *73 Magazine,* page 98. The generator is great and apt to be the starting point for many projects and articles of mine in the future.

Ever since I built the first one (I now have 3 in one form or another), I have been sold on the unit and keep building gadgets to put it to more use around my bench and ham shack. One is the unit to be covered in this article, another I have written up and built as an SSTV generator producing gray scale with sync, and the third will be forthcoming for use with touchtone equipment and repeater users may find it of interest. A fourth is in progress at the time of this writing for use with SSTV in the form of copying the weather satellites.

Project Outline

This little adapter unit will provide you all the RTTY tones (and SSTV) if you use it with the original tone generator by WØLMD. Further, it gives you automatic generation of the "RY" alternating letters used as a standard Teletype test because of its alternating Mark-Space format. For those just getting into RTTY, I am referring to the normal 7 part, 5 level code used by amateurs. All characters start with a Space tone from the "Mark-Hold" tone that keeps the machine (Teletype) quietly sitting there and not chattering away. Then the next five units are either Mark or Space, depending on the character sent. The final or seventh unit is always a Mark, usually sent 31 ms long (the rest are each 22 ms) to be sure some of it makes it through to end the character. Only a small part of the 22 ms units is really used, too, but all is usually sent to be sure of recovery in spite of fading, noise, etc. This unit uses all 22 ms units (often called Western Union because that is the format they use), the reasoning being that the unit

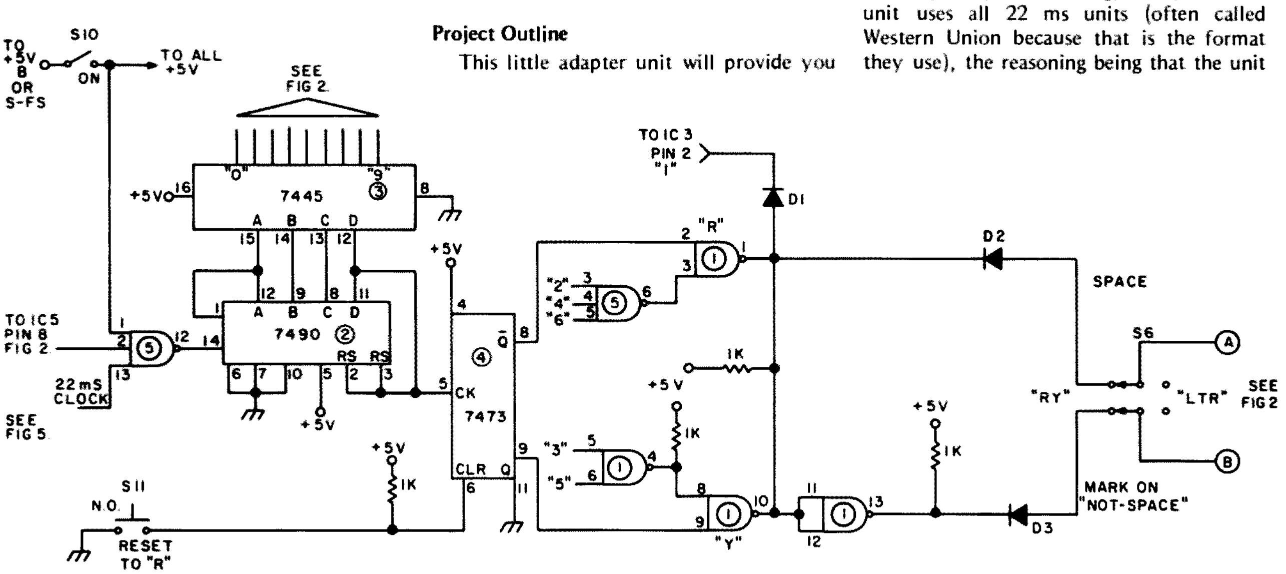

Fig. 1.

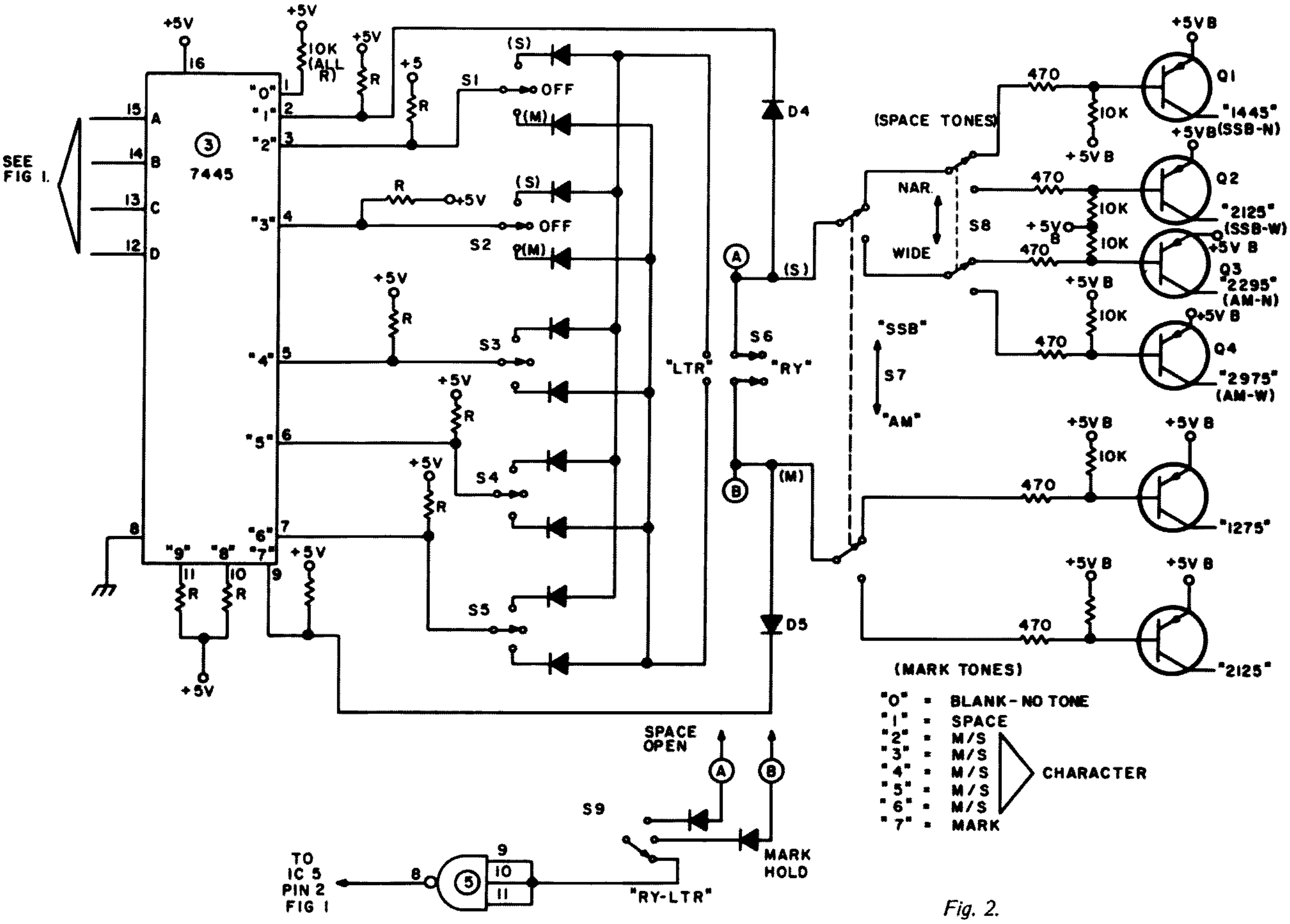

Fig. 2.

will be hooked right into the RTTY AFSK unit, and noise and fading are definitely not a problem in such a case. Secondly, it greatly reduces the hardware required.

A few words on switching are in order at this point. Switches added for the automatic character sending are: (1) S-1 to S-5, which are 3 position slide switches used to set up a character of your choice, to check out the TTY machine or one of the "SELCAL" type decoders if you are building such an item. Fig. 3 shows the actual slide switch form instead of functionally as in Fig. 2. (2) Switch S-6 is used to choose whether a "letter or figure" is sent or the "RY" pattern. (3) Switch S-7 is a DPDT unit marked "SSB-AM." What is really meant is whether the newer-lower tones that will pass through an SSB receiver filter are sent, or the older-higher audio tones used on AM type operation are chosen. (4) Switch S-8 chooses whether the older shift standard of 850 Hz wide (W) shift is sent, or the newer shift of 170 Hz narrow (N) is the result.

S-1 through S-5 are set up by using a chart of the required Mark-Space combinations for the character you desire. S-6 is set to "RY" for the automatic RY test, or to "LTR" for using S-1 to S-5 and a letter. S-7 and S-8 will depend on your use, equipment, and tones that you require.

S-9 is a function switch allowing a continuous Mark-Hold tone for 1275 or 2125 Hz Mark channel adjustments. It also stops the Teletype from chattering away while you change to a new letter or to RY combination. A second choice of S-9 is the Space-Open. The machine will run "open-loop" and chatter away if on, but you can adjust any of the four frequencies used for the Space channel depending on the setting of S-8 and S-7. The last position chooses the automatic mode, either "RY" or "LTR" depending on the setting of S-6.

S-10 is an on/off position to allow this unit to be used with the original tone generator when in the on position, and other gadgets to use the same tone generator when turned to off. In the off position, +5 V is removed from all +5 V points in the adapter except the electronic switches (transistors) used to key on the tone desired. The transistor emitters are supplied directly from the +5 V bus and have +5 V whenever the tone generator is on.

A word about the original tone generator as it applies to this adapter. All of the 7430 ICs with SSTV outputs can be eliminated if you want an RTTY only unit, thus reducing the overall cost. These ICs have SSTV frequencies of 1200, 1700, 1900, 2100 and 2300 marked at their outputs pin 8. The 7410 used to decode 1500 at pin 12, 1275 at pin 6, and 2125 at pin 8 must remain due to the two RTTY frequencies involved, but pins 1-2-12-13 need not be wired. The 7430 that has all the SSTV frequencies at its input can be eliminated and the 7402 pins 5 and 6 tied together. You may note that only half of the 7473 is used in the original tone generator, and you may feel free to use the other half for the RTTY adapter IC-4 by using the numbers shown in Fig. 1 and save some money.

Now that the unused ICs are out and the other half of the 7473 is used for the RTTY unit, you need only IC-1, a 7401; IC-2, a 7490; IC-3, a 7445; and IC-5, a 7410. A typical total cost of all these is $1.82. But you say, "Yeah, what about the tone generator?" If built as I described above for RTTY only, the IC cost for all ICs – tone generator, RTTY unit, and power supply IC – is only $6.45 plus $1.82, or $8.27. The power supply 309K is $1.95 of that cost, but I highly recommend its use. You must increase the power supply transformer to one with a 1 Amp rating, but that is the only power supply change.

My suggestion for wiring eliminates the switch in the original tone generator and replaces it with the electronic switches as shown. Each RTTY tone can be gotten alone or automatic mode is possible. If you choose to retain the SSTV mode, then merely rewire the switch as a seven position switch,

per the original switch for the first six positions A through F. (NOTE: The original Fig. 1 shows 2100 and E in position 6 which should be 2300 and F.) Then use Fig. 4 to wire up position 7. This allows normal SSTV use for six positions, and position seven puts you in RTTY function all with a single pole rotary switch and only +5 V being switched around.

Circuit Description – Logic

By placing a square wave with a 22 ms period into pin 13 of IC-5, and S-10 being on, the encoder IC-2 (7490) will begin to count. Its BCD lines are decoded in the decoder IC-3 (7445), and one line at a time from "0" to "7" goes low. The encoder and decoder is prevented from counting "8" or "9" by tieing the D line back to the encoder reset gate, resetting the counter as it tries to go to "8" (D-high). The D line is used for something else to be explained in RY generation. In the "LTR" mode of operation the lines "2", "3", "4", "5" and "6" cause Marks or Spaces to be generated depending on the settings of S-1 to S-5. Line "1" always generates the characteristic Space first unit, just as "7" always generates a Mark final or Stop unit. Switch settings as described decide what exact tones are generated for each.

RY Generation

The test pattern is a bit more complicated, but not greatly so if you break it down. IC-1 marked "R" can do *anything* only when IC-4 pin 8 is high. Likewise, IC-1 marked "Y" can only get a low output when IC-4 pin 9 is high. These two pins of IC-4 cannot both be high at any one time. Therefore, let us follow through an R generation, that is S – S - M - S - M - S – M (S = Space, M = Mark). Remember the first Space and the last Mark are put in for any automatic LTR or RY by lines "1" and "7" of IC-3, and won't be covered over again. The R is generated when IC-4 pin 8 is high, so let's start as though S-10 is turned on and then the "Reset to R" push-button S-11 is pushed. S-6 is in "RY" and S-9 in "RY-LTR." When the counter and decoder reach "2", IC-5 pin 3 goes low, IC-5 pin 6 goes high, and IC-1 pin 1 goes low. This low

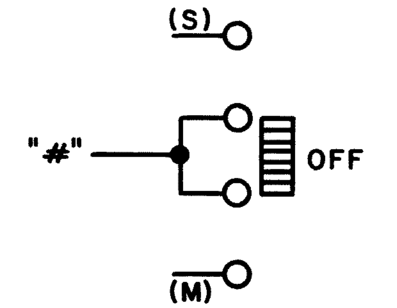

Fig. 3. S1-S5 switches: 1P3T. Center off position allows the generation of false characters to check logic-type decoders. It can be deleted and SPDT used if not wanted.

through S-6 and on through the chosen space frequency switch causes a Space tone to be generated. When advanced to "3", IC-1 pin 5 goes low, and pin 4 goes high, but since IC-1 pin 9 is low, IC-1 pin 10 stays high. Since both IC-1 pin 1 and pin 10 are high, and "1" is high (see D1 Fig. 1), all inputs to IC-1 pins 11 and 12 are high, and its output goes low causing an appropriate Mark tone for the switches S-7 and S-8 chosen. Diode D1, incidentally, defeats the Mark switch IC-1 pins 11-12-13, during the first "1" Space required by all letters and figures and is used in RY mode only. It appears to key the Space by the path through D2, but a better path is found through D4.

As the counter advances to "4", the same action as "2" results using IC-5 pin 4 instead of pin 3. Again at "5", the same as "3", using IC-1 pins 11-12-13 for a Mark. And finally at "6", again as in "2" and "4", using IC-5 pin 5. "7" sends its Mark as well as the low at IC-1 pin 13. This just happens to insure Mark sent when in RY mode only and is just a logic result and not intentional.

To generate a "Y", the same kind of logic applies throughout with "3" and "5" creating Spaces for the Y or S – M - S - M - S - M – M. The "3" and "5" control IC-1 pins 5 and 6, and function just as "2", "4", and "6" did into IC-5 pins 3-4-5. The one change is that following the generation of "R" above, the D line returning low and resetting the counter also sets IC-4 to the opposite state with the Q pin 9 high, and allows IC-1 pins 8 and 9 to control the tone generation. IC-4 (7473) continues to change state (toggle) after each pass of the counter to "8" and the D line falling from high to low. This is a narrow pulse just wide enough to reset the counter and toggle IC-4. The toggling of IC-4 produces alternate use of IC-1 "R" and IC-1 "Y", producing the RY tone sequences.

Position "0" allows a 22 ms opening to be inserted before each new character whether in RY or LTR mode and gives everything a chance to settle down. This makes up in part for the seventh (unit 7) Mark being only 22 ms wide.

Summation

Since the unit will probably be used into an AFSK unit, the filter shown in Fig. 6 should be used at the output of the tone generator to make the output into a pretty good sine wave. It is lifted exactly from an article by Bert Kelley K4EEU in July, 1973, *Ham Radio*, page 6. It worked so well on the SSTV adapter I built and mentioned earlier that I have sort of adopted it – hi! It passes the SSTV nicely, too, so you can use it even if you build the total combination unit SSTV/RTTY.

A couple of tips are in order if you are building an AFSK unit and are going to use this adapter to set things up. (1) Don't overdrive your filters; some type of compression limiting is highly desirable, coupled with an AGC system in your audio channel of the AFSK unit. (2) Consider a pair of active T filters in tandem as a front end. A switch selected resistor tunes each of them to the right high-pass and low-pass frequency easily. This tandem pair forms a bandpass circuit rejecting low frequency noise and high frequency chirps and peeps you tune across (and that tune across you). And finally, (3) DO try a trick I have learned from EME and Oscar listening that works gangbusters on RTTY for tuning. Do build the AFSK unit so that the incoming signal decoded into a dc shift in level keys your AFSK tone generator for sending – even when receiving. The keyboard controls it sending, and the incoming decoded dc shifts controls it on receive. This allows you to put a monitor and speaker/headphone jack on the AFSK sending unit's output. Obviously you can now monitor your sending for openers, but the best deal of all is receiving/tuning. Feed the output direct from the receiver speaker output to the AFSK receive input and the right or left earpiece of your headphones. Next feed the monitor output to the remaining earpiece of the headphones. Tuning becomes a snap – make the receiver sound like the monitor! Build the AFSK unit to have Mark-Hold in the absence of signals. As you tune in on a RTTY signal it will have one note (Mark) that sounds more and more like the other earpiece (monitor). As you tune closer yet, your decoder begins

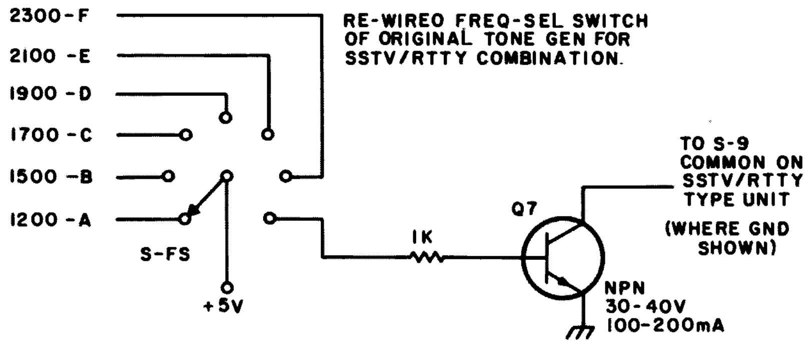

Fig. 4.

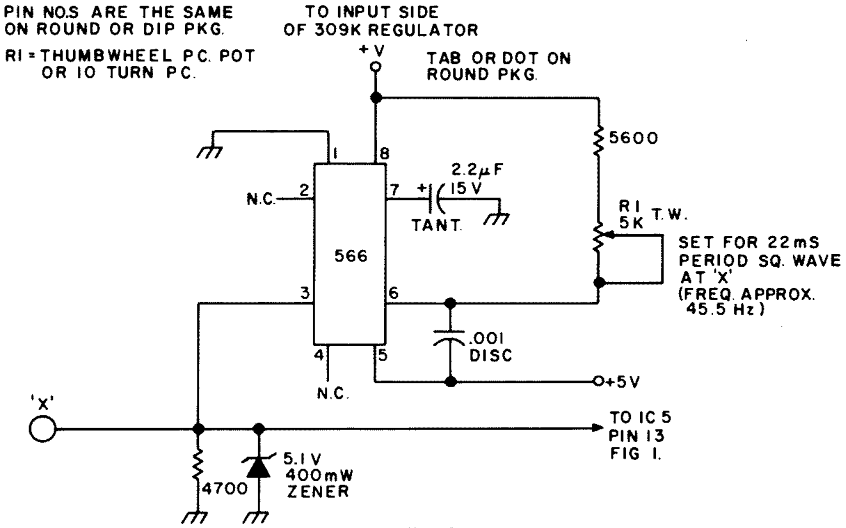

Fig. 5.

working and the machine comes to life since now it sees Mark-Space changes. Make the two sound alike and you are in the money.

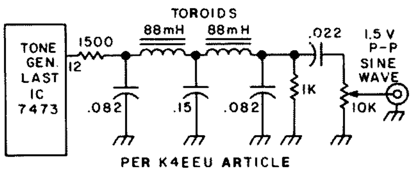

Fig. 6.

Sneaky way to tell in a hurry if he is on narrow shift and you on wide, etc., if either will key your decoder, but your AFSK sending unit is set up (switched) to the wrong shift — the Space tones never match — only the Mark tones!

Per usual, an SASE will bring whatever help I can be, but there should not be much trouble with this one with so few parts and wiring. For that reason, there is no circuit board layout. If enough guys want one, I guess I could lay one out for this and the SSTV unit. I built mine right into the RTTY rack mounted control unit. It also contains such things as a K2OAW CW identifier which was part of a repeater control by Pete. I just put a solid state timer or manual switch control into it, and it sends my call either every ten minutes if I send that long straight, or at the beginning of each transmission. I begin all transmissions with a blank key which sends nothing on my machine, but momentarily breaks the loop. Anytime the loop breaks, a PTT arrangement like VOX keys the transmitter, and the identifier identifies by shifting the Mark tone a small amount, but not enough for the other guy's unit to leave the Mark-Hold and print garble. This is quite legal and a widely used means of CW identifying. When it is running (10 wpm CW), the keyboard is disabled and the line over-run lamp on my Model 19 blinks in step with the CW being sent. Really quite easy, and sure makes RTTY a lot more fun than keeping one eye on a clock, your fourth hand keying the transmitter, etc. It is a collection of other guys' articles plus some original ideas all boiled into one small package by sharing parts, but I guess I should write it up if there is still interest enough in RTTY anymore — it sure works well.

Hope you enjoy the adapter, and a little careful wiring should have it working right the first time. TTL and digital things work that way — wire it right and it loves you. ■

I/O

by
Allan S. Joffe W3KBM
1005 Twining Road
Dresher PA 19025

What's That In Binary?

My first introduction to the world of computers left me with a reaction similar to the one I had when I saw my first schematic of a single sideband rig. The HHW* flag came up in every register.

I also tend to break out into a rash when real math comes my way, which is not the best reaction when starting to shake hands with computers.

Since others of the ham fraternity may suffer similar reactions, I have dredged the contents of my SVM** to recall a simple way of converting a base ten number into the binary numbering system or into the octal system of notation.

Interestingly enough, I was exposed to this method some thirty-five years ago, in, of all places, a Latin class. The instructor believed in making things come alive by spending some class time showing us how to multiply and divide Roman numerals. Computer stuff, by comparison, is mere child's play – and it is no wonder the barbarians wiped out Rome. It had to be painfully obvious that the Romans were so busy XXVIIing it that they had no time left to fight a mere war.

Here is a little something for my fellow non-math lovers:

$$A_{1b} + A_0 + \sum_{1}^{\infty} a^{-1}\ b^{-1} \ldots$$

It is perfectly obvious that this little bit of razzle-dazzle contains all the wisdom needed to convert a number of any base or radix to a number with any other base. For example, a decimal number to a binary number or an octal number to a decimal number.

Rather than trying to unscrew the unscrutable by translating this little gem into basic English, let me pass on a simple nuts and bolts nugget of wisdom derived from said mathematical mouthful.

Specifically, let's examine a way to convert any decimal number, such as 19758 or a number of your choice, to binary or octal. All you need is the native ability to divide by two or by eight.

Decimal to Binary Conversion

1. The digits as derived are set down right to left, the rightmost digit being the least significant bit and the leftmost digit being the most significant bit.

2. We divide the number first into odd or even by inspection. If the number is even we automatically make the least significant bit a ZERO. If the number is odd, we make the least significant bit a ONE.

3. Now we proceed to divide the number by two in a series of successive divisions. We ignore fractional remainders produced by the divisions, i.e., 19 divided by 2 would produce a real world answer of 9½, but we would ignore the remainder or fractional ½.

4. Any division that produces an EVEN number gives us a ZERO in our process of converting decimal to binary.

5. Any division that produces an ODD number gives us a ONE in our process of converting decimal to binary.

6. The process of successive divisions ends when the number is finally reduced to ONE again, ignoring any fractional remainders.

Example: Convert Decimal Number 38 to Binary

1. By inspection, since 38 is an even number the least significant bit is a ZERO.

.....0

2. 38 divided by 2 = 19. Nineteen is ODD, hence next bit is a ONE.

....1 0

3. 19 divided by 2 = 9 (ignore fraction). Nine is ODD, hence next bit is a ONE.

...1 1 0

4. 9 divided by 2 = 4 (ignore fraction). Since 4 is even, next bit is a ZERO.

..0 1 1 0

5. 4 divided by 2 = 2. Since 2 is even, next bit is a ZERO.

.0 0 1 1 0

6. 2 divided by 2 = 1 (divisions end). Since ONE is ODD, the next bit is a ONE.

1 0 0 1 1 0

The final binary number thus produced is decimal 38 converted to its binary form.

This painless method makes it much easier to generate decimal to binary conversions than remembering the absolute values of each binary bit, particularly for conversions where the decimal number is four or five digits long.

Decimal to octal conversion is a similar process involving successive divisions by eight. However, the signposts in the divisions are different. In the decimal to binary conversion we completely ignored the fractional parts associated with the successive divisions. In the octal conversion we use the numerator of these fractional parts to tell us what the octal bit values are to be.

As you know, in binary or base two, we only have a string of ONEs or ZEROs in the final conversion. In octal or base eight we use the numbers ZERO through SEVEN.

*How the Hell does it Work?
**Somewhat Volatile Memory (mine).

Decimal to Octal Conversion

1. As in the binary conversion, we are using a series of successive divisions; this time the constant divisor is 8. The same rule of bit value applies: Rightmost digit is the least significant bit and the leftmost digit is the most significant bit.

2. Select a number in decimal to be converted to octal and divide it by 8. This will result in a whole number or a whole number plus a fraction. If the result of the division is a whole number, the octal bit is a ZERO.

3. If the division results in a whole number plus a fraction then the octal bit is represented by the numerical value of the numerator of the fractional part.

4. The next successive divisions divide the whole number part of the previous division by 8, applying the above rule for determining the bit value of the octal number.

5. The successive divisions come to an end when you are left with a simple fraction.

Example: Convert Decimal 525 to Octal

1. 525 divided by 8 = 65-5/8. Thus our least significant bit is 5.

. . . 5

2. 65 divided by 8 = 8-1/8 thus our next bit is 1.

. . 1 5

3. 8 divided by 8 = 1-0/8. Since ONE is a whole number the next bit is a ZERO. The form 1-0/8 is shown to make it clear that the numerator is really still our guidepost even in the case of "no" fractional remainder.

. 0 1 5

4. We now divide ONE by 8 (which equals 1/8), which produces our most significant bit – and the division process ends as we are down to a simple fraction.

1 0 1 5

Thus 525 decimal has been converted to 1015, which is its octal equivalent.

These simple conversions will make life a bit more livable when you meet the computer, and you are a giant step ahead of good old Flavius Maximus, who had to MCXVII it all the way to the Circus Maximus checkout. By the time he got his change counted, the show was over! ■

by
John W. Crawford WA4SAM
2471 Pyrenees Ct.
Reston VA 22091

The Smart Power Supply

The need for a good, laboratory grade high current power supply prompted the design of this continuously variable current and voltage regulated supply for general bench use. Various parameters were considered with an eye to size, cost and simplicity. It was decided to design a 0-20 Amp, 0-25 volt regulated supply with an additional regulated 5 volt, 10 Amp logic output for experimenting with high current TTL circuits.

A Motorola chip MC1466 is available for \$7.50 from most IC distributors. This basically is the heart of the power supply. The chip continuously monitors the voltage/current requirements and provides an output proportional to the various parameters as set by front panel controls. This output is fed to some pass transistors to boost the current to the required level. All the regulator parts are mounted on a PC card with the exception of the 2 pass transistors and their emitter resistors.

With this design, any voltage/current relationship may be employed, the output depending only on the maximum ratings of the 2 pass transistors and the transformer/rectifier used. It would not be unrealistic to use this same circuit but with a different transformer to provide a 0-50 volt, 30 Amp supply, or by changing both transformer and pass transistors a 0-500 volt, 2 Amp supply. The chip is quite versatile, maximum current and voltage output being determined by the value of the voltage and current adjust pots. For maximum output, 1 mA must flow through pins 3 and 8 of the IC. Therefore, for a 25 volt supply, this value is 25k. For a 50 volt supply, it is 50k. As long as the voltage from the rectifier is 2 volts or so above the maximum value required, the finished unit will exhibit voltage and current limiting to the required maximum limits.

The circuit is straightforward and simple. An auxiliary supply, 20 to 30 volts at 20 mA, is required for operation of the MC1466. A Calrad or similar Japanese transformer rated at 26.5 volts at 80 mA was used with a simple on-card half wave rectifier and filter capacitor. The main dc supply is obtained from a Signal Transformer Company 18-12 transformer. This transformer has two center-tapped windings rated 18 volts at 12 Amps. Paralleling these windings and utilizing a bridge rectifier gives a maximum 25 volt, 24 Amp output from the supply. Transient and noise protection to the IC is necessary and is accomplished by C_1, C_2, C_3, C_9, C_{10}, C_{11}, R_1 and D_3. The capacitors equalize high frequency components across the main and auxiliary supplies while the resistor and zener diode shunt transient spikes around the IC.

A range switch switches the transformer secondary taps to keep from wasting power. When up to 10 volts or so is needed, this switch controls a relay which is hooked to

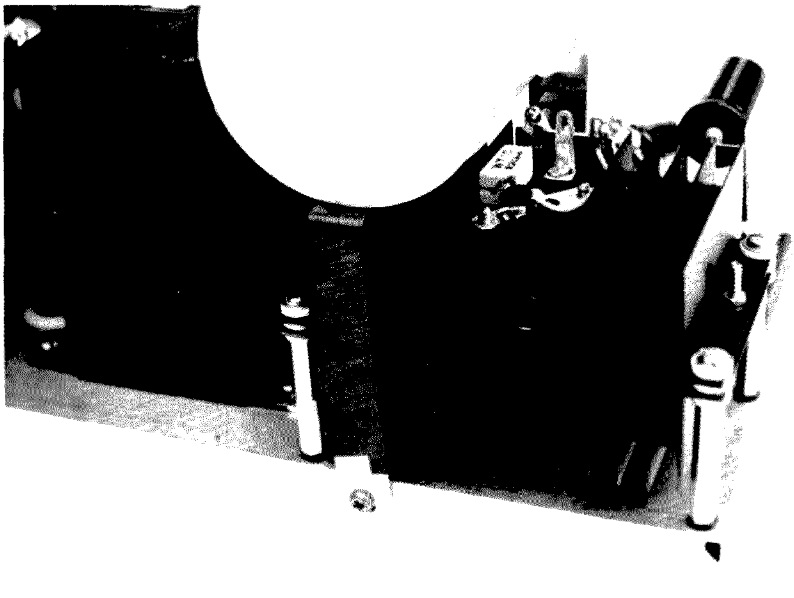

Heat sink and capacitor (C15) mounting. Unregulated voltage from the bridge rectifier assembly is attached to one of similar screws at each end of heat sinks. 2N3055 pass transistors are fastened to heat sinks. The .10 Ohm resistor in view was used in prototype, but higher current supply as described in text must have two each.

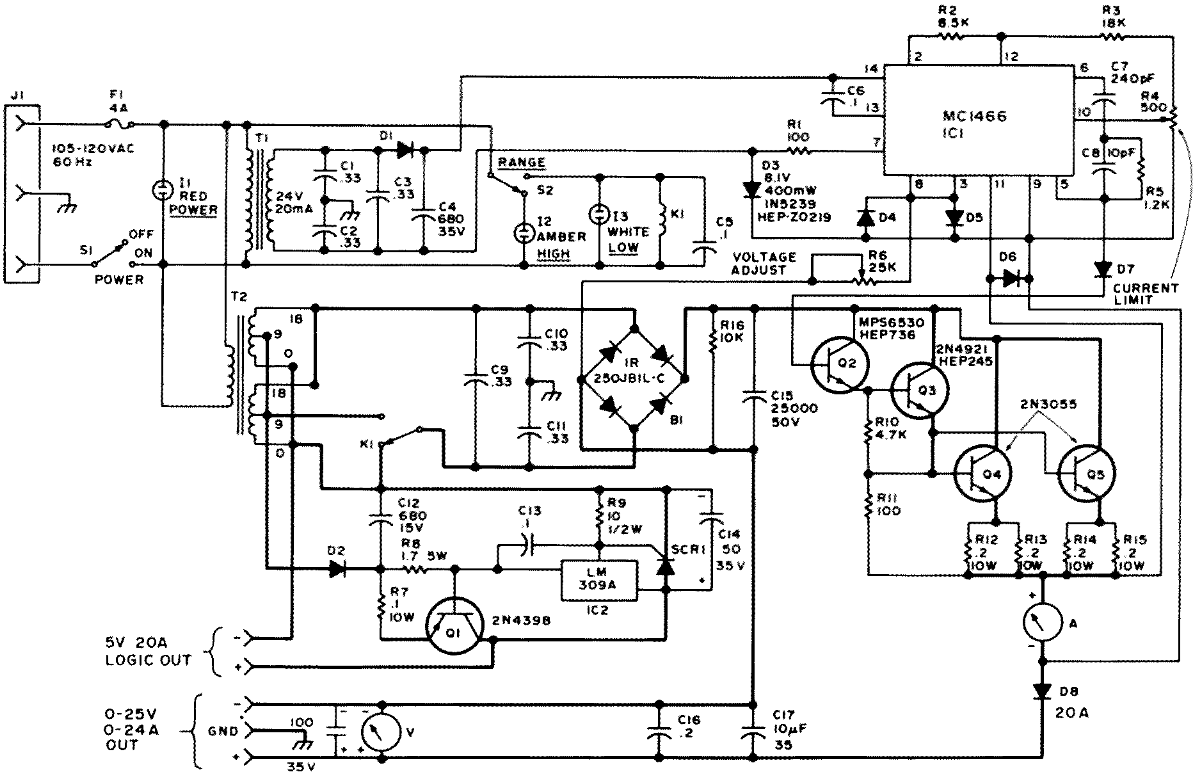

Fig. 1. Schematic. Note: All resistors ¼ Watt except where noted. All diodes 1N4002 or equivalent except D2, D3, D8. D2, D8 are 50 piv 20 A. Dark lines indicate #12-#14 wire or heavier. All other wiring #18.

the 0 and 9 volt taps on the transformer. If higher voltage is needed, it must be placed in the high position which utilizes the full secondary of the transformer.

Since cost was a factor, inexpensive Japanese meters were used. They are accurate to within 4% of full scale. With respect to voltage, this is a mere one volt. When checked against DVOM, they were found to be well within this accuracy.

The bridge rectifier used was an IR 250 JBIL-C, rated at 25 Amps, 100 piv. Since this is an integrated bridge rectifier configuration designed to be mounted on a single heat sink, it was used to save the space four discrete mount rectifiers would require. Note that an adequate heat sink is required (IR HE 510).

After filtering, the 25 volt output from the main supply is fed to the pass transistors and the regulator card. The pass transistors are two 2N3055s in parallel for current requirements mounted on two IR HE513 heat sinks. The collectors must be insulated from ground since they are connected directly to the unregulated dc output from the filter. The IR heat sinks have insulated mounting bushings which preclude the use of mica transistor insulators and thus provide better heat sink action. The four 0.2 Ohm resistors (R12-R15) equalize the emitter loads and allow for differences in

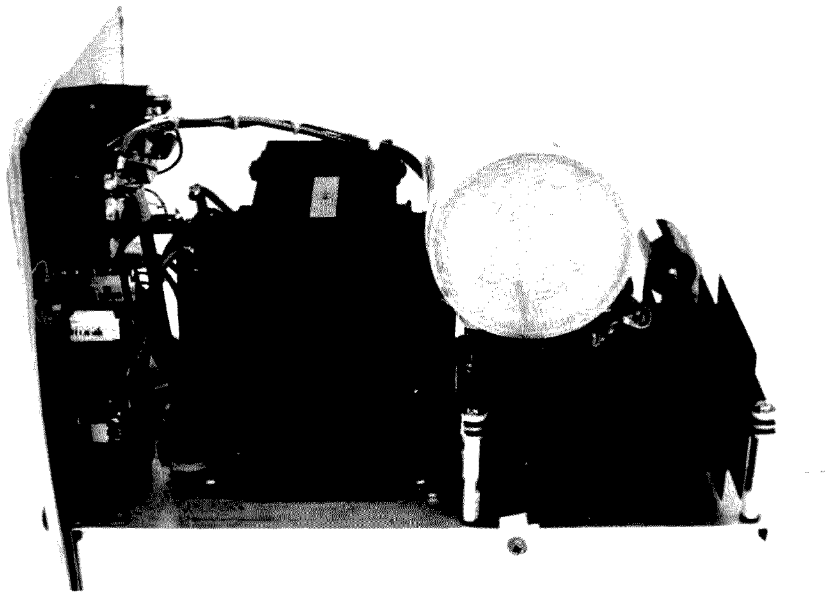

Side view of supply.

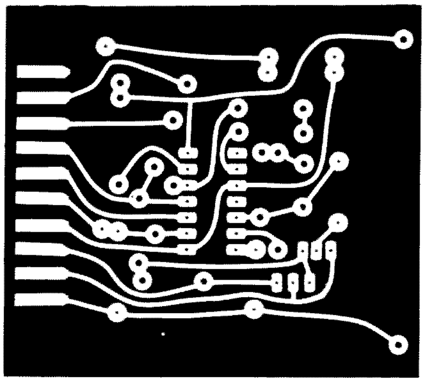

Fig. 2(a). PC board (full size). Etched, drilled and tin-plated boards are available from the author for $5.00 each. Send SASE.

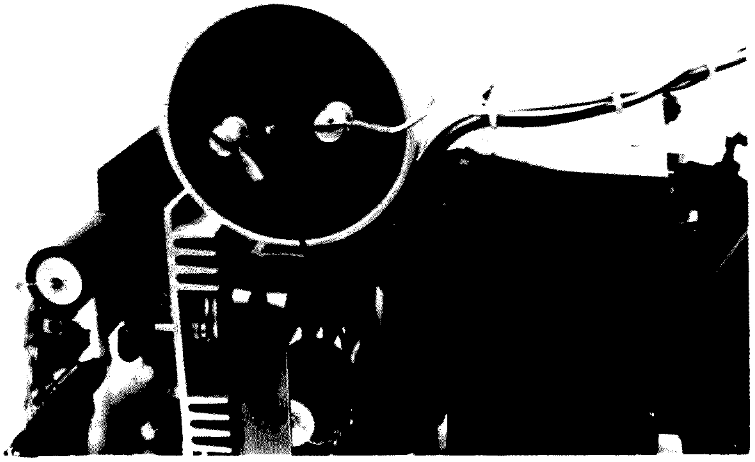

Method of mounting capacitor C15 (25000 uF). Large cable ties strap it to heavy aluminum bar, bent to fit chassis. Heat sink to left contains 10 A 5 V logic regulators. Small capacitor beneath is C12; C13 is visible attached to LM309 socket. R16 is attached to C15 terminals.

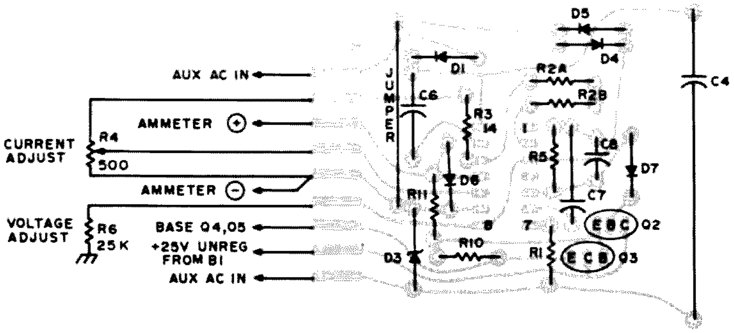

Fig. 2(b). Component layout.

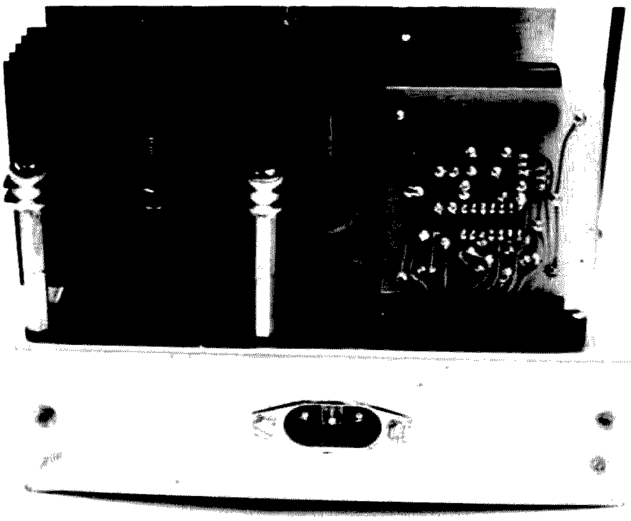

Rear view of power supply showing PC board and heat sink mounting (for pass transistors). PC board contains all regulating parts except for pass transistors.

individual transistors. At full output, each parallel leg passes 10 Watts. Thus 2 resistors at .2 Ohms, 10 Watts in parallel are hooked to the emitter of each transistor to give a .1 Ohm, 20 Watt resistor. A terminal strip is fastened to the heat sink for the other end of these resistors by tapping out a 6-32 hole in the heat sink and mounting the terminal strip so that the resistors fit snugly along the channels of the heat sink.

This method helps keep the resistors cool and makes for a neater layout. After connecting these terminal strips together with heavy wire, another length of 12 or 14 gauge wire is run to the current meter. Note that if this meter is not used, a .025 Ohm, 15 Watt resistor must be used across diode D3 (or 4 0.1 Ohm, 5 Watt resistors). Also diodes D4, D5 and D7 must be used if your input voltage is above 20 volts, for protection of the chip during short circuit or transient conditions. Additional protection is insured by D6 in the case of simultaneous pass transistor failure and output short circuit, and D8 protects the power supply in circuits with a high ac content which could damage the IC.

The logic supply consists of an LM309 and 2N4398 (or equivalent) shunt transistor to provide a fixed 10 Amp, 5 volt regulated supply for logic designs where high current TTL is used. The 0 and 9 volt ac taps from the power transformer are used for primary input power. This is rectified in a simple half wave circuit and filtered with C12. C13 prevents oscillations from lead dress or other factors evident in some of these surplus 309s. The LM309 then provides the control and protection circuitry for the entire circuit. Current limiting is achieved by limiting the base drive to the PNP transistor under short circuit conditions. The internal current limit for the LM309 is approximately 3 Amps. Under short circuit conditions, this causes about a 3.4 volt drop across R8, one Amp being needed to drive the base of the transistor. Assuming a 1 volt VBE for the 2N4398, the peak output current is then limited to about 10 Amps. The transistor and LM309 are mounted on a common heat sink allowing the thermal limiting circuitry of the IC to protect both the power transistor and regulator in case of excessive dissipation. Additional protection is achieved by the SCR and R9. If the output rises above 5 volts, the internal zeners in the LM309's output conduct, greatly increasing the ground pin current. When the output approaches approximately 7.5 volts, the SCR will fire, thereby shutting off the over-voltage and protecting the circuit under test. Under normal conditions, only about 50 mV is dropped across R13. Since the 50 Amp SCR is expensive, this is not a necessary addition. If this is omitted, however, the 10 Ohm resistor R13 should be shorted. This crowbar circuit is effective and is good over voltage protection, however, since the 5 volt supply is not metered.

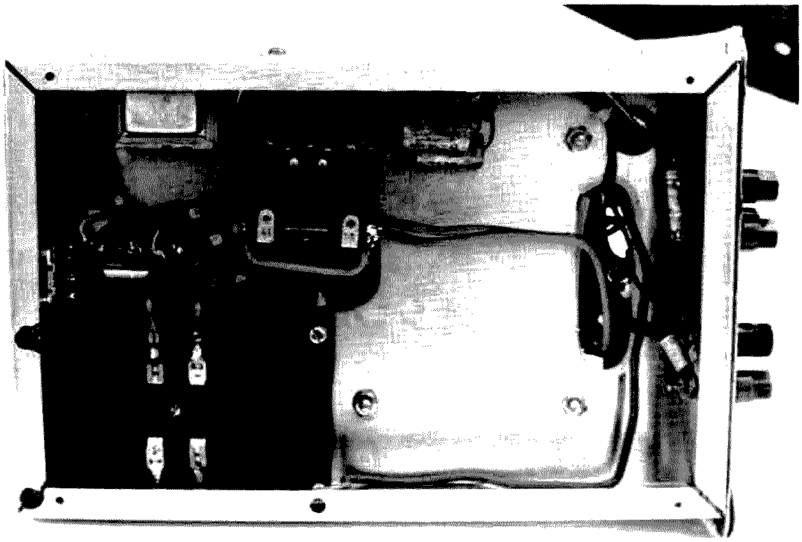

Bottom view of chassis, showing PC board socket wiring, relay placement, and rectifier and heat sink location.

The whole circuit is built into a Bud WA1541 portacab on a Bud AC407 chassis. This cabinet has a handle on the top for easy carrying and is usually found at hamfests, sans front panel which can be easily made. The front panel layout is included in Fig. 3 for photo layout on Scotchcal® or other panel materials. The 2N3055 transistors are mounted on heat sinks which are placed bottom to bottom so that the mounting flanges are closest to each other. After the 2N3055s are mounted and R12-R15 installed as previously stated, a hole is drilled through the center of each heat sink flange and a 6-32 screw with a 6-32 nut, used as a spacer, on each holds the heat sinks together. The main supply connects to one of these screws. The insulated bushings supplied with the heat sinks are secured in place and the whole assembly is mounted on the right rear corner of the chassis using threaded spacers. Directly underneath these heat sinks on the inside of the chassis, the heat sink for the 25 Amp bridge rectifier is secured through the chassis to the threaded spacers. A hole is drilled and tapped in the bridge heat sink to accept an 8-32 screw, which secures the rectifier assembly. The use of silicone grease is recommended to insure adequate heat sinking. Since the IR 250 JBIL-C rectifier is insulated from ground, no mica insulators are needed.

The PC card is designed for a Cinch 50-10A-20 board edge connector. This connector is fastened through the left rear of the chassis and wired. Directly in front of this is another heat sink for the LM309 and 2N4398. The front half of the chassis is reserved for the main power transformer T2. Underneath, the auxiliary supply transformer T1 and relay K1 are located. Filter capacitor C15 is a 25000 microfarad 50 volt unit obtained surplus. It is so large physically that it had to be mounted to a piece of steel bracket bar ½" wide, which was bent to go up, over and down past the pass transistors and other heat sinks on the top. It is then fastened to the chassis sides and the capacitor held in place with large wire ties. The photos show the layout of the larger parts.

Substitutions are no problem. The pass transistors can be any high current types. The others can be any substitutes, keeping in mind that an F_t of $>$ .5 MHz is desirable. The diodes, except for D2 and D8, are all 1N4002 or any 1 Amp garden variety plastic diodes. If the space is available, the IR bridge assembly may be converted to 4 discrete diodes wired in a bridge configuration but with adequate heat sinks. D2 and D8 are 20 Amp diodes heat sinked to the chassis. The main transformer, as stated previously, can be any voltage desired, not to exceed the Vce ratings of the pass transistors. Similarly, the current ratings can be 2 Amps or 200 Amps, making sure, again, that your chosen pass transistors will handle it. Relay K1 is a surplus 110 volt DPDT unit with 15 Amp contacts wired in parallel.

After construction, check the unit out by placing it on its side and setting the controls as follows:

Voltage Adjust	Fully ccw
Current Adjust	Nine o'clock
Range Switch	Low

Turn the unit on and make sure the "low" and "power" lights come on. Set the range switch to high and check its indicator. Then rotate the voltage control until the voltage meter reads 10 volts. Rotating the current limit pot fully ccw, the voltage will fall to zero. Next connect the 0-25 volt terminals together and carefully adjust the current limit pot until the current meter reads 2 Amps. Let this condition remain for a few moments to check for signs of overheating. Next, a 10 Ohm, 10 Watt resistor should be placed across the output which will indicate a current of one Amp. Watch the voltage meter for signs of fluctuation while hooking this up to check the regulating circuits. A small drop may be evident which will be as a result of I^2R losses in the wiring and current meter.

Do these steps in exactly the above manner if you are not sure what you are doing. If all seems normal, disconnect the load and rotate both voltage and current adjust pots to max and watch the meters. Throw the range switch to low and assure that the voltage drifts to about 12 volts with no load.

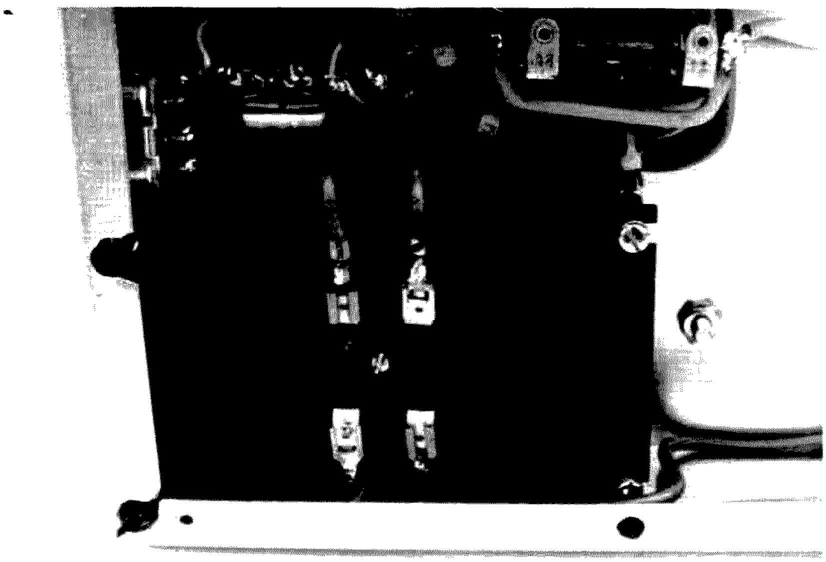

Close-up of 250JBIL rectifier bridge and heat sink assembly, showing method of mounting and wiring.

If all seems normal, install in the cabinet using the 4 panel mounting screws. Next, place it on the rear end and drill out the chassis flanges to accept #8 self-tapping screws, and affix rubber feet through the cabinet to these holes. Do not rely on the 4 panel screws because of the weight of the transformer.

The prototype has been in use for the last three months and has been found to be reliable and trouble free. The power supply exhibits a low impedance at all frequencies and low noise. It has been used at full output to service a 100 Watt Class C amplifier being driven by a 10 Watt transceiver, as well as a low current automobile tape deck, and performed equally as well on both set ups. It was a pleasure to set the voltage output to 13.5 volts, key the transmitter and amplifier and watch the output remain constant in spite of the increased current, a fact not before possible when unregulated, variac controlled power supplies were used. Charging batteries is another use to which this has been put. A constant charge rate is easy to achieve by setting the voltage to anything over what the battery is rated and setting the current flow to the desired rate. ■

References

Motorola Applications Note DS 9130 R3.

Electronic Engineering Times, "IC Regulators Boost Protection."

"Regulated, Variable Solid State High Voltage Power Supply," *Ham Radio*, January, 1975, p. 40.

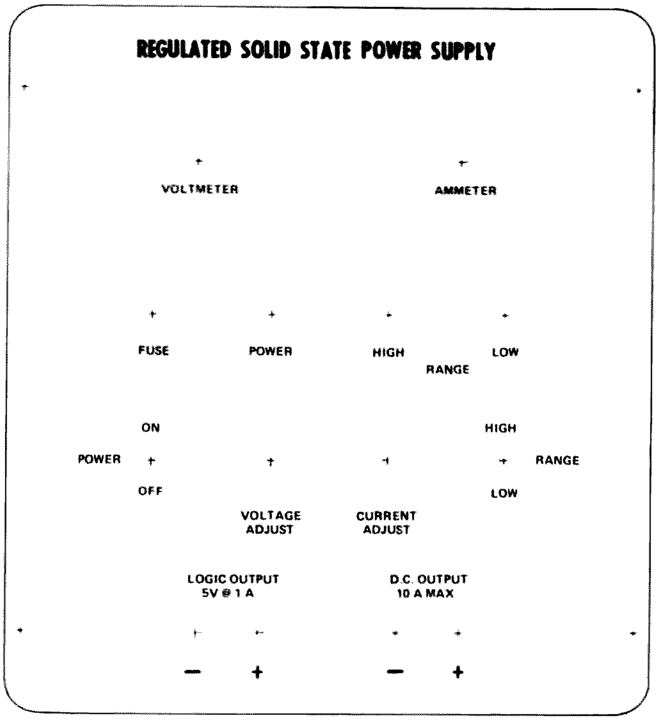

Fig. 3. Front panel layout for photo sensitive panel (50%). Black letters on brushed aluminum Scotchcal® with stick-on back are available from the author for $5.00 each. Send large (8½" x 11") SASE.

FOR YOUR EYES ONLY

Guidebook of Electronic Circuits
by John Markus
McGraw-Hill, Inc. ($24.50)

This is one of the most comprehensive collections of electronic circuits available, and it will save you much time in finding that special circuit for your next project. Here in one volume are over 3600 diagrams of the most widely sought, yet difficult to obtain, electronic circuits. This book is a rich collection of circuits from amateur radio magazines (including *73*), books, application notes and hundreds of other electronics magazines.

All diagrams are arranged in a manner which makes it easy for the amateur, student or engineer to find exactly what he's looking for in a matter of minutes. In addition to the table of contents (arranged in 131 alphabetical classifications), there is an author index – as well as a subject index with over 10,000 entries to help you find the exact circuit you need.

As an example of the sections, here are just a few of the 131 categories presented: alarm circuits, amplifiers, A/D converters, audio, automotive, battery chargers, clock circuits, computer circuits, counters, digital display circuits, filters, hobby circuits, lasers, measuring circuits, metal detectors, multiplexers, op amps, oscillators, photography circuits, receiver circuits, regulators, remote control, science fair projects, stereo circuits, telemetry, telephones, television circuits, test circuits, transceivers, transmitters, VCOs, zero voltage switching circuits – and the list goes on and on.

In addition, all circuits described are fully tested with component values listed to assist you in duplicating the results.

Information for the book was drawn from a multitude of sources and the following quote by the author verifies this:

"The circuits for this new book were located by cover-to-cover searching of back issues of U.S. and foreign electronic periodicals, the published literature of electronic manufacturers, and recent electronic books, together filling well over 100 feet of shelving."

Now that you have some idea of the wealth of information contained in this single, easy-to-use volume, I'm sure that you will want to own your own copy. I highly recommend it.

W. J. Prudhomme WB5DEP

Electronic Projects for Musicians

This is a dandy book, written by one of *73*'s authors, Craig Anderton. It runs about 134 pages and sells for $6.95. If you are into music you'll really get a kick out of this one. There are very simple projects for building all sorts of fantastic music gadgets . . . particularly for electric guitars or amplified guitars. Fuzz, ring modulator, treble booster, all kinds of special effects. If you're not into the guitar, you might be into making money as a builder of music gadgets . . . looks like a very profitable field.

The book is written for the absolute beginner, and there are several chapters about the parts, building, switches, knobs, wire, hardware . . . a very good basic introduction to home building which any Novice would do well to read.

To get the book, complete with a record built in demonstrating the effects of the gadgets, send $6.95 to Guitar Player Productions, Box 615, Saratoga CA 95070.

Master Handbook of 1001
Practical Electronic Circuits
Edited by Ken Sessions
Tab Books No. 800
$9.95

Here is a different approach to a radio and electronics handbook. The *Master Handbook of 1001 Practical Electronic Circuits* is a valuable reference tool, containing schematic, logic, and block diagrams for scads of electronic goodies.

There are circuits for alarms and automotive circuits, power supplies and regulators, timers and test equipment, transmitters, receivers, and lots more, each section including simple and complex circuits. The collection is well organized and indexed. You can use the handbook to help you design equipment, or simply build the circuits directly.

Modern digital IC circuitry is presented, with both large-scale integrated circuit diagrams and "discrete" logic diagrams that clarify what goes inside the "black boxes." An appendix gives IC substitution data.

Staff

Adrift Over Your C's?

by
F. G. Rayer G3OGR
Reddings, Longdon Heath
Upton on Severn, Worcs.
WR8 ORJ, England

Once upon a time capacitors were nicely marked 0.1 uF, or even 0.05 MFD, or so on, as the case might be. But now it is necessary to deduce their value from a rainbow of bands or spots, not to mention such numberings as 4k7, 5n, 5pj. Is that last colored band a figure in the value, or a tolerance? Not to mention the useful collection of mica and other capacitors with obliterated markings, and those with only a maker's number. Having recently used some quite large tubular capacitors marked 5kp, in the expectation that they were 5,000 pF, or 0.005 uF, only to find they were in fact 50 pF, I decided it was high time a simple means of checking the values of doubtful capacitors was made.

The circuit of the result is shown in Fig. 1, and despite its simplicity it works nicely for values from 25 pF to 10 uF. Q1 and Q2 are combined to form an audio oscillator, output from Q1 being applied across the bridge.

The bridge has five capacitors, for five ranges. Cx is the unknown capacitor. VR1 is a linear pot (it must be linear) for balancing, and high resistance phones indicate the null, so that the capacitor value can be read from the setting of VR1.

Oscillator

Assembly details will probably not matter much, but the audio oscillator can be wired on a tag strip, as seen in the photo. Both the

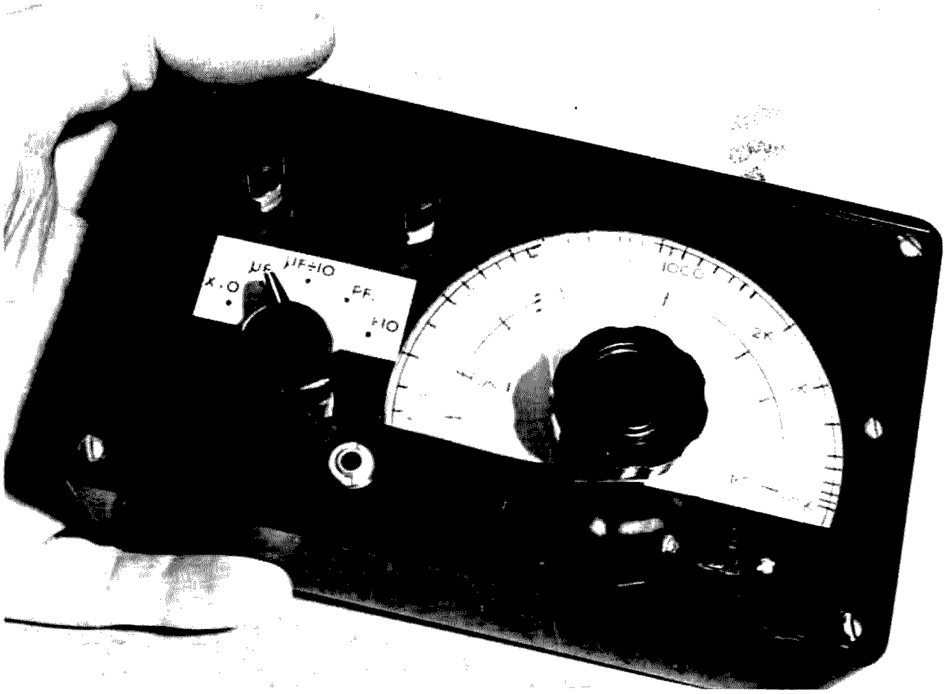

transistors are audio or small output types, such as are available in great number, and it is difficult to find two transistors which will not work here. Q1 must, however, be NPN, while Q2 is a PNP type.

A quite high tone is best, and if necessary juggle with C6 or R2, or both, to obtain this. The supply need not be 9 V. The phones put across R1 will show how this works, and two flying leads are soldered on to go to the bridge part of the unit.

Bridge

The 5-way switch selects any capacitor C1 to C5. Without using the extreme settings of VR1, where accuracy falls, the center setting of VR1 is obtained when Cx is the same as C1, C2 or so on. As an example, if C3, 0.01 uF is in circuit, the middle setting of VR1 balances the bridge at 0.01 uF for Cx. From here, the swing of VR1 goes from one-tenth to ten times, so that this range is 0.001 uF to 0.1 uF.

In the same way, C2 (1000 pF) gives a range of 100-10,000 pF, while C4 gives 0.01-1 uF, and C5 gives 0.1-10 uF. C1 would by the same token provide 10-1000 pF, but the null or balancing point for VR1, easily audible with larger values, grows a little difficult to hear at the extreme low capacitance end of this scale.

It will be seen that the overlap is such that the same total coverage would be achieved with only C1, C3 and C5. These three ranges would be 10-1000 pF, 0.001-0.1 uF, and 0.1-10 uF. However, the extra capacitors C2 and C4 are well worthwhile, to fill in for easy checking.

C1 and C2 should be silver mica 1 percent items. For C3, a 2 percent or 5 percent item will probably have to be adopted. C4 may be difficult to get with better accuracy than 10 percent, unless costly, while C5 is actually two 0.5 uF tubulars in parallel. This means that calibration can be accurate for the lower values, but is less so for high values. In any case much accuracy is often not necessary with large values, except possibly in audio filters and some other applications.

These items are grouped mainly round the switch, and the layout shown allows convenient wiring with the capacitors supported by a near tag of the audio oscillator section.

Case Etc.

A plastic box about 6 x 4 x 2 inches with insulated panel is most suitable. It carries an outlet for the phones, on-off switch, two terminals for Cx and a bracket to clamp the battery in position.

The scale for VR1 is marked 100 pF to 10k pF for C2 range, and 0.01 uF to 1 uF for C4 range. The switch is marked pF and

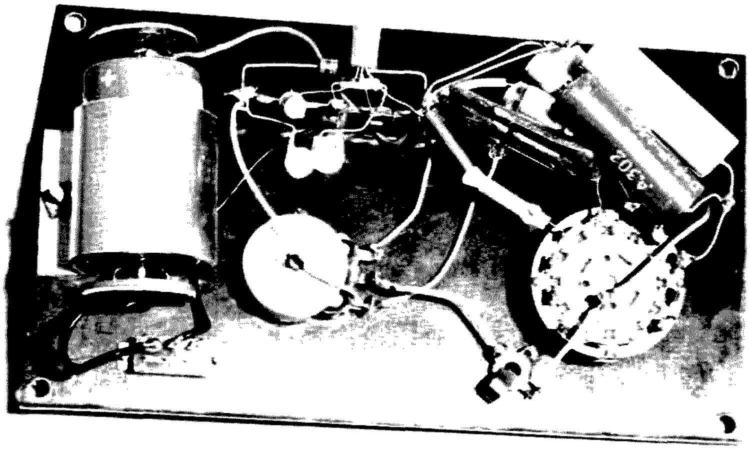

Interior view.

uF for direct reading of these ranges, and for uF x 10, uF ÷ 10, and pF ÷ 10 for the other ranges.

Calibration is carried out on the C2 range, with several known capacitors, perferably 1 percent, such as 100 pF, 250 pF, 500 pF and a few others. Values can be obtained by paralleling some, such as 250 and 100 for 350 pF, while switching to C1 range allows the 100 pF, 250 pF and other low values to be used again, for what will be 1000 pF, 2500 pF and similar 10x values on the C2 range.

No calibration is made for the large capacitor ranges, as these will be progressively 10x the existing ranges (assuming C3, C4 and C5 are accurate enough).

A clip or two on short leads from the terminals will be handy for some capacitors. Simply rotate VR1 for the null, and read the value on the scale. High impedance phones, in the 2k to 4k range, will be best. A dip but no real null shows leakage, and is to be expected with electrolytic capacitors. ■

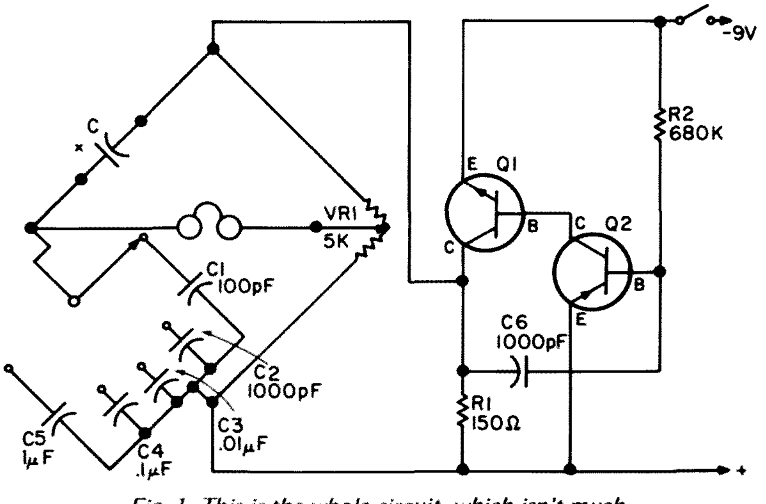

Fig. 1. This is the whole circuit, which isn't much.

How to Use Surplus Pots

by
Robert W. Fay WB0NPN
4201 Briar Park
Lincoln NE 68516

There are many good buys in potentiometers to be found on the surplus market. Some of these are of the adjustment and precision types, forms of pots that are precisely settable and manufactured to exacting specifications. This article will describe basic characteristics of adjustment pots, methods for identifying usable units and simple tests to make sure they are functioning properly.

A potentiometer is a variable resistor used to adjust voltages in electronic circuits. It is composed of a

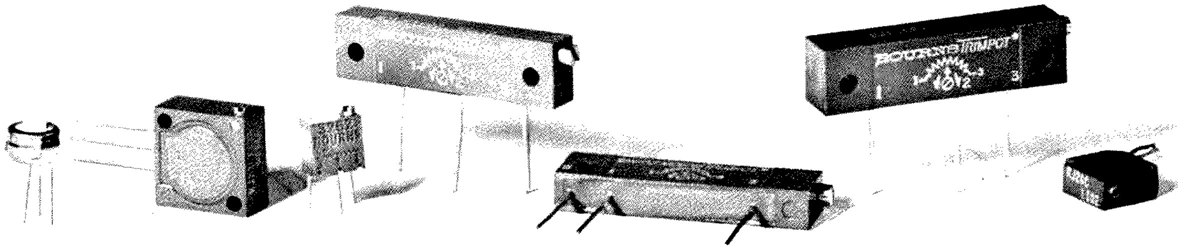

resistive element, whose total resistance is the value used for identification purposes. A current flows through the resistance creating a voltage drop across the resistor, and a movable wiper contact is driven from one end of the resistance to the other, thereby tapping the resistance to obtain the desired voltage.

Adjustment potentiometers are made by several major electronics components manufacturers. Surplus circuit boards often contain pots of varying styles and resistance, thereby offering a variety of additions to the junk box.

The most common type of pot is the single turn panel mount used for repetitive adjustment purposes such as volume, squelch, etc. These are turned with a knob, screwdriver, allen wrench or the bare finger routine, and are adjusted from end to end in one turn or less.

Precision pots are also panel mounted and knob adjustable. However, they are made of multiple turn design which permits the use of a long, coiled resistance element. As the pot is adjusted, the wiper spirals along the coils permitting great precision and settability. Precisions are often mounted with a clock or digital readout dial, thereby allowing exact resetting.

An adjustment pot operates on a screw and gear reduction principle, with multiple revolutions of the adjustment screw being required to drive the wiper from one end of the resistance to another. Since they have a shorter resistance

Style	Resistance-Temperature Characteristic	Temperature Characteristic	Terminals	Resistance	Failure Rate
Wirewound RJ24	C	2	P	101	
Non-wirewound RJ24	F		P	101	
Established Reliability RTR24	D		P	101	M
RJR24	F		P	101	M

Table 1.

element, their precision falls between the multi-turn and the panel control. Additionally, most adjustment pots contain a clutch mechanism at the end of wiper travel to prevent internal damage, which could result due to the mechanical advantage of the gear reduction system. Leadscrew versions are driven linearly with a machined leadscrew, in the same manner as the tool holder of a lathe. Worm gears have the resistance element formed in a circular manner, and contain a worm driving a gear to produce the circular motion of the wiper. Space, mounting requirements, electrical specifications and function are the prime determinants in the selection of which type to use.

The most common types of pots have resistance elements made of carbon, cermet, conductive plastic and wire. The carbon pot is most often found in panel mounting controls. They are made by depositing a carbon based resistance compound on a dielectric mandrel. Carbons can be made in very high resistances, have a negative temperature coefficient, and tend to absorb moisture.

The cermet pot is made by printing a proprietary suspension on a ceramic substrate. This type is rapidly replacing the carbon pot due to superior electrical and mechanical performance, plus manufacturing cost advantages. They withstand elevated temperatures, offer long mechanical cycle life and infinite resolution.

Conductive plastic is quite similar to cermet, and represents the latest development in pots. The resistive ink is chemical in nature rather than a suspension.

The wirewound pot is made by winding a very small diameter wire on a dielectric

or insulated mandrel, which is then formed to fit within the configuration of the finished unit. The resistance per foot of the wire is translated into the number of turns of wire required to produce a predetermined total resistance for a given diameter and length of element. Destructive analysis of a 10 Ohm and a 50k Ohm wirewound would show much larger diameter wire more widely spaced in the 10 Ohm than in the 50k. The wire in the 50k will actually be smaller *in* diameter than human hair.

Generally speaking, wirewound pots are used in applications requiring high power handling capability, stability of setting, and low temperature coefficient characteristics. Carbons, cermets and conductive plastics permit infinite resolution, stability of setting, better high frequency performance than wirewounds, and are available in a very broad range of resistances and tapers. They are lower in cost than wirewounds.

Before we go further into identification and testing, let's look at definitions for some of the terms already used and those to come later. These are the most common terms affecting the casual user.

Resistance (Ohms)	Code
10	100
20	200
50	500
100	101
200	201
500	501
1k	102
2k	202
5k	502
10k	103
20k	203
50k	503
100k	104
200k	204
500k	504
1 Meg	105
2 Meg	205
5 Meg	505

Table 2. Resistance Codes.

Total Resistance (TR): The resistive value in Ohms of the entire pot. Omitting the variable wiper tap, the pot could be used as this value of fixed resistor.

Resistance Tolerance: The variation from nominal value in Ohms, usually specified as a percentage. A 50k Ohm unit with a tolerance of ±10% could have a value between 45k and 55k.

Power Rating: The power in Watts which the pot is capable of dissipating at a specified temperature. Use Ohm's law to calculate the power dissipated in a particular situation. The power dissipation capacity will be reduced at elevated temperatures.

Maximum Operating Temperature (MOT): The highest temperature at which the pot is rated to function.

Higher temperature, either internal or ambient, may result in electrical characteristic changes, and/or electrical or mechanical failure.

Resolution: The minimum change in resistance that can be obtained in adjusting the pot. It is infinite in the case of a continuous strip resistance such as the cermet. In a wirewound, it is dependent upon the number of turns of wire that are in contact with the wiper, and the change in resistance per turn of wire.

Contact Resistance Variation (CRV): The change in resistance seen by the wiper circuit attributable to the movement of the wiper. It is specified as a percentage of the total resistance. This can be demonstrated by connecting a wiper to the vertical amplifier of an oscilloscope. Using a slow horizontal sweep rate, turn the adjustment screw at a constant rate. This will produce a slanted trace which shows the voltage drop seen by the wiper from one end of the resistance to the other. However, at the instant the screw is started and stopped, there will be a sharp vertical deflection of the trace. This represents the added resistance in the circuit caused by the movement of the wiper over the resistance material. Special circuits can also be constructed to show the short time duration spikes which occur during adjustment. A storage scope is of great use in this testing.

Minimum End Resistance: The smallest resistance obtainable when measured between a TR pin and the wiper, with the wiper driven to the end of its mechanical travel. It is expressed as a percentage of total resistance, or in Ohms. Ideally, it is zero Ohms, but in practice will not reach this value due to contact resistance within the pot or physical factors of construction.

Nominal Turns Adjustment: The average number of revolutions of the adjustment screw needed to drive the wiper from one end of the resistance to the other.

Temperature Coefficient: The change in resistance per degree change in temperature, expressed in parts per million (ppm). Typically, the temperature range is $-55°C$ to $+150°C$.

Taper: A term describing the change in resistance per unit advancement of the wiper. The taper is linear when the change in resistance is uniform with respect to wiper advancement. Just about any taper can be made.

Mil-Spec Humidity Requirement: Mil-Spec units must pass a humidity test. This insures that they will

operate satisfactorily in a wide variation of ambient conditions, and may be successfully post coated after assembly to the circuit board. Will be stated as yes or no in the specification sheet.

Noise: A discontinuity between the wiper and resistive element experienced as the wiper is driven along the resistance. It would be observed in the same test set up for CRV as a sharp vertical deflection or discontinuity on the scope. Manufacturers establish QC criteria relating to permissible voltage variations and time durations. Everyone has experienced this in the extreme form of a noisy volume control.

DESC: Defense Electronic Supply Center. The agency which sets Mil-Specs for all electronic components, and verifies performance to these requirements.

Qualified Parts List (QPL): A listing of manufacturers qualified by test and performance verification to produce potentiometers listed in the Mil-Specs. Letter designators are listed on the pot to indicate the level of qualification (number of successful hours of testing without failure exceeding prescribed limits).

When you obtain a surplus pot, you will find it marked with either the manufacturer's model number or the Mil-Spec designation. In some cases both the Mil-Spec designation and the manufacturer's model number may appear on the pot. In this case, it is obvious that the manufacturer uses the same basic design to fill both markets, although the exact specs and quality control testing for each group may be different. It should be noted that Mil-Spec requirements are minimums that a pot must meet. It is possible to exceed these requirements in regular production.

A manufacturer introduces any model potentiometer for which he feels there is a market. However, in the case of Mil-Specs, there are only certain model classifications. These relate to physical size, type of resistive element, and electrical/mechanical specs. This permits standardization

Table 3. Key to terminal types.

Type	Description
J	J Hook Solder Lugs
L	Insulated Stranded Leads
S	Solder Lugs
P,T,Y	Printed Circuit Pins (flat mtg.)
W	Printed Circuit Pins (edge mtg.) with screw parallel to pins
X	Printed Circuit Pins (edge mtg.) with screw at right angles to pins
Y	Printed Circuit Pins (staggered — flat mtg.)

Qualification Level	% Failures per 1000 hours load life test
M	1.0
P	0.1
R	0.01
S	0.001

Table 4. Key to failure rates (established reliability).

within the military electronics market.

To be listed on the QPL for a given designation, a manufacturer must produce pots which will meet all of the applicable Mil-Specs, in test conditions supervised by DESC. Once listing on the QPL is obtained, the manufacturer must periodically retest production units in each designation to insure continued compliance. Additionally, there are different levels of qualification which relate to the total number of hours test units have been functioning under specified electrical load conditions without failures exceeding a set rate. The qualification level, as we will see later, is marked on each Mil-Spec unit. Most manufacturers also conduct a similar program of recertification for their own models.

Each potentiometer model is manufactured in several different mounting configurations. This permits the utmost flexibility for the circuit board designer. Basically, these involve the orientation of the adjustment screw with respect to the terminal pins, the spacing and shape of the pins, and the physical dimensions of the pot. It is also possible to buy pots with wire leads, thereby permitting mounting of numerous assemblies at a location convenient for service adjustment. Rarely will the operating characteristics of the same model vary between pin styles.

Now that we have the basics down, let's pick up a pot and learn how to identify it. We'll start with some Mil-Spec units, which are the most often encountered type.

Tables are included to explain the coding. The breakdown between wirewound and non-wirewound is evident, together with the additional R in the established reliability group. Each type will also have a date code, such as "7426A." This means the twenty-sixth week of 1974, and the letter indicates manufacturing plant location, which can be obtained from the QPL.

See! 73 BICENTENNIAL SUBSCRIPTION AD p.19

There is another grouping of Mil-Spec pots known as the Established Reliability group. These are upgrades of the regular DESC models, and must continually pass the most exacting tests. Table 4 contains an explanation of the failure rates.

All pots also have an electrical schematic printed or molded on them. This enables you to mount the pot correctly and know which way to turn the adjustment screw for the desired effect.

Were you to obtain the same pot produced as the manufacturers' model, it would be labeled as "3290-1-101," or in the non-wirewound, "3292P-1-101," in the case of Bourns. The model numbers have been substituted for the RT/RJ, -1 indicates it is the normal production version of this model, and P and 101 have the same meaning as in the DESC version. Some pots may also have the resistance printed in plain language.

Pots are often made with special characteristics or testing for specific customers. In such a case, the -1 would be changed to an identification number unique to that customer. Although you are apt to find such units on surplus boards, there is no way to interpret these markings, and the unit will have to be tested to determine if it is usable in your particular application. In most cases, it will be, since many of these pots have had only special testing or electrical preconditioning.

Now that we can identify what we have, let's move on to some simple tests that will let you know if the pot is usable. All of these can be performed with an ohmmeter.

Set the ohmmeter range to coincide with the TR code of the pot and measure TR by connecting to the two appropriate pins, as indicated by the schematic. Remember to account for the TR tolerance per our definitions. If you are unable to get a reading, switch the meter successively to different ranges. No reading on any range indicates an open pot, which is useless. If a reading is obtained on a different range, the pot may be misprinted, or there may be an electrical malfunction within the unit. We will see how to determine which of these is the case further along.

Now switch one of the ohmmeter probes to the wiper pin, leaving the other on one TR pin. A change in resistance as the adjustment screw is turned should be noted. If a change does not occur, the wiper is not driving, and the pot is useful only as a fixed resistor.

Continued

	Symbol	Maximum Resistance temperature characteristic (25°C)	Maximum ambient temperature at rated wattage	Maximum ambient operating temperature
Non-wirewound	C	±250 ppm	85°C	150°C
	F	±100 ppm	85°C	150°C
	H	±50 ppm	85°C	150°C
	J	±10 ppm	85°C	150°C
Wirewound	C2	±50 ppm	85°C	150°C
	D (ER Only)	±50 ppm	85°C	150°C

Table 5. Resistance-Temperature Characteristic.

Without changing the ohmmeter connections, turn the adjustment screw until the resistance indicated goes to zero. Now, turn the adjustment screw at a uniform rate until the resistance indicated reaches the TR value. If the resistance change from zero to maximum occurs uniformly with revolutions of the adjustment screw, the unit has a linear taper and is functioning properly. Watch for equal resistance changes per screw revolution, rather than uniform meter movement, since most ohmmeter scales are non-linear. Various tapers can be determined by plotting resistance change vs. screw revolutions.

If a unit whose measured TR did not agree with that printed on the case were tested in this manner and showed a sudden change in resistance under this test, we would have a defect within the pot which is causing a large resistance change at one point along the resistive element. These pots should not be used, as changes in TR with environmental or internal temperature variations may occur. Such failures can occur due to broken substrates, broken wires or numerous other failure modes. Dissection of the pot and subsequent tracking of the ohmmeter probe along the resistor would reveal the defect location.

Connect the ohmmeter lead simultaneously to all three terminals and the other lead to the adjustment screw. There should be no continuity. This test may be repeated several times while you are checking drive. Indication of continuity would mean electrical contact between wiper and screw, resulting in an electrically active screw and a potential for circuit damage or electrical shock.

The ohmmeter may or

may not be able to detect noise within the pot, depending upon time duration of the wiper discontinuity or damping of the meter. A short term deflection of the meter towards infinity is an indicator of noise. It can most readily be observed while turning the adjustment screw slowly. Unless noise extends over the entire resistance, the serviceability for amateur use is not seriously affected, since it is unlikely that the wiper would have to be positioned exactly at that point.

With the general information, definitions, tables of characteristics, and tests which we have developed, you are set to identify, test and use surplus pots. In home brew work, the choice of which pot to use in a given application usually is controlled by what is on hand more than operating parameters. I would suggest only a few guidelines.

If you are dealing with frequencies above audio, stay away from wirewounds. They make excellent inductors, with very unpredictable results. Check the power requirements which will be needed against the manufacturers' or DESC specs, and don't exceed them. By the way, the catalogs of major electronic supply houses are excellent sources to obtain the manufacturers' basic specs.

The MOT of many pots is close to the maximum temperature that internal components can stand without failure. Overloading the pot will raise its temperature, inviting failure. Choose a pin style that will fit neatly on the circuit or perf board and provide easy access for adjustment. If the pot has to be buried in a sandwich, use a wire lead model.

Adjustment potentiometers are rugged devices, so only moderate care need be exercised in mounting to circuit boards. All pots have high solderability requirements for the terminals, since they are usually wave soldered to boards. Surplus pots may show degraded solderability due to contaminants on the pins. These may be cleaned with freon or isopropyl alcohol prior to use. The flux contained in the solder core should do the remainder of the cleaning job.

As with all electrical components, there are a lot of specs that the normal user is never concerned with. I've listed only the most common ones in this article, leaving it to the individual to acquire other information if the situation warrants. Good luck and happy building using adjustment potentiometers. ■

COLLINS R-388/URR RECEIVER, military version of the 51J-3, tunes 500 kHz to 30.5 MHz, 19" rack mount, 115 V/60 Hz $345.00

COLLINS R-388A/URR RECEIVER, military version of the 51J-4, has switch for mechanical filters, tunes 500 kHz to 30.5 MHz, 19" rack mount 115 V/60 Hz 475.00

COLLINS R-389/URR VLF RECEIVER, tunes 15 kHz to 1500 kHz, digital readout, 115 V/60 Hz 550.00

R-390/URR RECEIVER, tunes 500 kHz thru 30.5 MHz digital tuning, dual rf, audio filters, 115 V/60 Hz, 19" rack mount 450.00

R-390A/URR RECEIVER, tunes 500 kHz thru 30.5 MHz, mechanical filters, 115 V/60 Hz 19" rack mount . . 650.00

HAMMARLUND SP-600JX, tunes 540 kHz to 54 MHz in 6 bands, 115 V/60 Hz, 19" rack mount 375.00

URR-13 RECEIVER, tunable UHF 225-400 MHz, used to monitor military and satellite frequencies, 115 V/60 Hz 145.00

R-109/GRC RECEIVER, 27 to 38.9 MHz FM 28 V, tunable 24.50

BC-348 RECEIVER, tunes 200-500 kHz and 1.5 to 18 MHz, 28 V, easily converts to 115 V/60 Hz by building a power supply 65.00

BENDIX MN-26C RADIO COMPASS RECEIVER, 28 V, 150 thru 1500 kHz 18.50

ARN-14 OMNI RECEIVER, 108.1 to 135.9 MHz, synthesized, complete with mount and control head 39.50

BC-733 RECEIVER, 108-110 MHz crystal controlled aircraft receiver, 28 V 7.50

ARN-5 GLIDEPATH AIRCRAFT RECEIVER, 332-335 MHz, 28 Vdc, crystal controlled 9.50

R-19/TRC-1 FM RECEIVER, 70-100 MHz 115 V/60 Hz 19.50

COMMUNICATIONS ELECTRONICS CO. TYPE 901-1 RECEIVER, tunable 30-60 MHz and 60-300 MHz in two bands, AM/FM/CW 300 kHz and 20 kHz bandwidth, S meter, 19" rack mount 225.00

PRC-6 ARMY HANDIE TALKIE, 47 to 56 MHz complete with antenna, less battery 28.50

RT-294/ARC-44 MILITARY FM AIRCRAFT TRANSCEIVER 24.0 thru 51.9 MHz, 280 channels, synthesized, 8 Watts output take 28 Vdc with control head 45.00

SG-3/U FM SIGNAL GENERATOR by Measurements Corp., covers 50 MHz thru 400 MHz in 3 bands, 01 to 100,000 M/V calibrated output fully metered, a late military type generator for FM alignment in the amateur, marine and commercial field, 115 V/60 Hz 375.00

MODEL VOX-2, Technical Material Corp., variable frequency oscillator, tunable 2 thru 64 MHz, oven controlled, 115 V/60 Hz 85.00

FREQUENCY COUNTER FR114/U, 20 Hz – 1 MHz 6 digit Nixie readout, ideal for low frequency or audio work, a scaler could be designed to operate in higher ranges to cover amateur or commercial frequencies – a beautiful counter, govt. cost $3,800.00 . . . . 85.00

ELECTRO MODEL NF FILTERED DC BENCH POWER SUPPLY, metered 0-50 Vdc and 0-25 amps dc, variable pot. Size 9½H x 14W x 14L, ideal power supply to run 12 or 28 Volt equipment, filtered for transistor work 95.00

BALLANTINE 300 AC VTVM, 10 Hz to 150 kHz range, 1 mV to 100 V in 5 ranges, logarithmic scale 1-10 dB, accuracy 2% 32.50

SG-34/GPM-15 LORAN TEST SET, use to calibrate and test all Loran a/c receivers 115 V/60 Hz 125.00

OSCILLOSCOPE PLUG-INS, TEK Type H, K. Lavoie LA545/-54D, Hickok 1824, 1825, 1832 . . . . 45.00

AN/PRM-1 RADIO INTERFERENCE AND FIELD INTENSITY METER, range 150 kHz – 25 MHz, sensitivity 1 mV 185.00

PRM-10 GRID-DIP OSCILLATOR, 2 MHz thru 400 MHz, perfect for antenna work 65.00

TS-175/U FREQUENCY METER, 85 kHz to 1000 MHz high frequency version of the BC-221 with original calibration book 75.00

HP-400D VTVM, a popular lab instrument, ac 1 mV to 300 V, 10 Hz to 4 MHz 69.50

BOONTON 260A Q METER, 50 kHz to 50 MHz . . 225.00

NEW LONDON 257A FM MODULATION DEVIATION METER, 20 MHz thru 1000 MHz 145.00

B & K MODEL 1075 TELEVISION ANALYST, a flying spot scanner, ideal for slow scan 135.00

TEKTRONIX 525 TELEVISION WAVE FORM MONITOR OSCILLOSCOPE. Used to monitor video wave forms165.00

BIRD IM-89/UR SWR INDICATOR, 200-400 MHz, 0-50 Watts 1 to 6 swr UHF version of the model 43 . . . . . 65.00

FR-4/U FREQUENCY METER, replaced by Military BC-221, range 100 kHz thru 20 MHz, has built-in scope and audio oscillator heterodyne unit that generates 100 mV output at 50 Ohms .001 accuracy, with calibration book 65.00

TS-230E RADAR TEST SET, measures power and frequency range 8500-9700 MHz 39.50

TS-505/U VTVM, 0-250 Vac, 0-100 Vdc, 0-100 M resistance, ac frequency response 30 Hz to 500 MHz, high input impedance, portable ruggedized construction, complete with probe 45.00

HP-185B OSCILLOSCOPE with 187B dual trace amplifier, dc to 1000 MHz 10 mV – 200 mV/cm, timebase 10 NSEL-10 PSEC +X2, X5, X10, X20, X50, X100 magnifier, sweep rate 40 PSEC 350.00

HP-410B VTVM, ac 0-300 V, dc 0-1000 V Ohms 0.2 to 500 milliohm, freq 20 Hz to 700 MHz 85.00

TEKTRONIX 181 TIME MARK GENERATOR 95.00

HP-614A SIGNAL GENERATOR, 900-2100 MHz, metered modulation and calibrated output 195.00

MEASUREMENTS 82 SIGNAL GENERATOR, freq. range 20 Hz to 200 kHz in 4 ranges and 80 kHz to 50 MHz in 7 ranges, output 0 to 50 Volts mod 0-50%, ideal for VLF/HF work 225.00

SG-103/URM-25F SIGNAL GENERATOR, 10 kHz thru 50 MHz in 8 bands, calibrated output, crystal calibrator, modulation 400, 1000 Hz 0-80% 275.00

73 READER SERVICE

Circle appropriate Reader Service # for desired company brochures, data sheets or catalogs and mail in to 73. Include your zip code, please. Send money directly to advertisers. *LIMIT: 25 requests.*

ADVERTISER INDEX

☐ *NEWSSTAND* ☐ *SUBSCRIPTION*

READER SERVICE

73 Inc., Peterborough NH 03458
March 1976

Please print or type.

Name ________________ Call ________
Address ________________
City ________________
State ________________ Zip ________

Coupon expires in 60 days . . .

SOCIAL EVENTS

Because of our publication schedule, all notices of social events must be received by the 15th of the third month preceding the event's occurrence. For example, a hamfest announcement for June 27th must be received by March 15th. Unfortunately, we cannot guarantee publication of notices received after this date.

ROCK FALLS IL
MAR 7

The Sterling Rock Falls Amateur Radio Society Hamfest will be held March 7, 1976 at Sterling High School Field House (bigger and better location), 1608 - 4th Avenue, Sterling IL 61081. Tickets $1.50 advance — $2.00 at door. For info write — Don VanSant WA9PBS, 1104 - 5th Avenue, Rock Falls IL 61071. Talk-in 94 simplex.

TOLEDO OH
MAR 13

The 21st Annual Ham Auction. America's Largest. Saturday, March 13, 1976, at Lucas County Recreation Center, Toledo, Ohio. Auction, flea market, commercial displays, prizes, XYL luncheon ($2.75 by 3/1/76). 8:00 am to 5:00 pm. $1.50 advance (SASE), $2.00 after March 1st. Talk-in 146.52. Toledo Mobile Radio Association, Box 273, Toledo, Ohio 43696.

BERRIEN SPRINGS MI
MAR 13

The Blossomland Amateur Radio Association's 10th annual hamfest will be held Saturday, March 13th, at the Berrien County Youth Fairgrounds, Berrien Springs. Advance registration $1.50; $2 at the gate. For info, write: BARA, PO Box 345, St. Joseph, Michigan 49085.

BELTSVILLE MD
MAR 14

The annual Maryland FM Association's Electronic Swapfest will be held on March 14, 1976 from 0830 to 1530 hours at High Point High School, 3600 Powder Mill Road, Beltsville, Maryland. Donations are $2.00 per person, and tables will be available for $3.00 per table. For advance tickets and/or reserved table send appropriate remittance to David McCrory WA3TKW/KQI2199, P.O. Box 111, College Park, Maryland 20740. Please make checks payable to the Maryland FM Association, Inc. Prize drawing will be held at 1500 hours. Talk-in will be on 146.16/146.76 MHz. Any correspondence with reference to the Swapfest should be directed to: David McCrory WA3TKW/KQI-2199, Chairman Electronic Swapfest, P.O. Box 111, College Park, Maryland 20740.

VERO BEACH FL
MAR 20-21

The Bi-Centennial Treasure Coast Hamfest will be held at the Vero Beach Community Center Saturday and Sunday, March 20 and 21, 1976. Sponsored by Vero Beach Amateur Radio Club, Inc., and St. Lucie Repeater Association, P.O. Box 3088, Vero Beach FL 32960.

EAST RUTHERFORD NJ
MAR 20

The Knight Raiders VHF Club's auction and flea market will be held on Saturday, March 20th, at St. Joseph's Church of East Rutherford, Hoboken Street, East Rutherford, New Jersey. Free admission, free parking, refreshments available. Talk-in on 146.52 and 146.94. Doors open at 11 am. Flea market tables: $5 for full table, $3 for a half table. Reserve your tables in advance by writing to The Knight Raiders VHF Club, Inc., K2DEL, P.O. Box 1054, Passaic, New Jersey 07055.

WASHINGTON DC
MAR 24

1976 ARRL Technical Symposium on Mobile Communications will be held on the evening of Wednesday, March 24, 1976 at the Statler Hilton Hotel, Washington, DC. Areas of interest are: HF/VHF/UHF mobile communications, repeater technology and operations, signaling and control techniques, special mobile communications (AMSAT, ATV, RTTY, etc.); especially subjects of interest to both amateur and commercial mobile radio users. Summaries are due by February 1, 1976. Manuscripts, photo of author and biographical sketch of amateur/electronic background due by March 1, 1976. Write: Paul Rinaldo K4YKB, 1524 Springvale Ave., McLean VA 22101 or call (703) 356-8918 evenings.

TOWSON MD
APR 4

The Greater Baltimore Hamboree will be held April 4, 1976 at 8 am at the Calvert Hall College, Goucher Blvd. and LaSalle Road, Towson MD 21204. (One mile south of exit 28, Beltway-Interstate 695). Food service, prizes, contests and a giant flea market. 250 tables inside gym. Registration $2. Over 1000 attended last year. Information: Contact Brother Gerald Malseed at school address or call 301-825-4266.


73
AMATEUR RADIO
APRIL 1976
$1.50
FM Special Issue
With I/O - Computers Are Ridiculously Simple!

#186 APR 1976

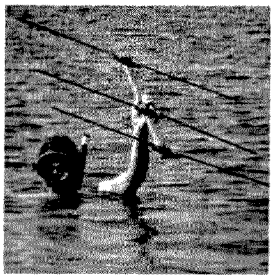

98

18

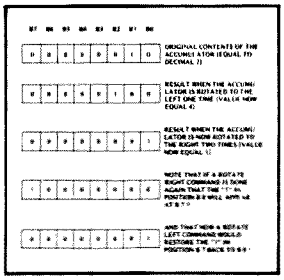

68

60

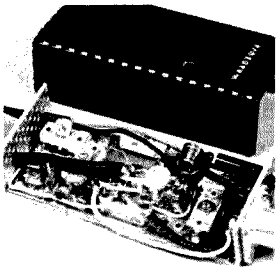

COVER: Nancy Cluff with the Yaesu FT-221. Photo by Ed Crabtree; dogs and sled courtesy of David Houston, Jaffrey NH.

73 Magazine (where the action is) is published monthly by 73, Inc., Peterborough NH 03458 (a good place to live). Subscription rates are a ridiculously low $10 for one year worldwide, $17 for two years, and $17.76 for three years (the buy of the year?). Second class postage paid at Peterborough NH 03458 and at additional mailing offices. Phone: 603-924-3873 (hey, don't call much after 4:30 pm EST, okay?). Microfilm edition — University Microfilms, Ann Arbor MI 48106. Tapes — Science for the Blind, 332 Rock Hill Rd, Bala Cynwyd PA 19904.

INCLUDE OLD ADDRESS AND ZIP CODE WITH ADDRESS CHANGE NOTIFICATION.

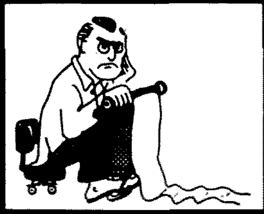

NEVER SAY DIE

...de W2NSD/1

EDITORIAL BY WAYNE GREEN

HAPPINESS IS A NEW RIG

One of the greatest joys of hamming is getting on the air with something new . . . a rig, an antenna, a new mode. Unfortunately, one of the more frustrating aspects of hamming is trying to find out what to buy.

At the heart of the problem is the fact that there are too few amateurs to present a market for ham gear which attracts larger and better organized companies — thus most of the ham gear manufacturers are small outfits, often run as much as a hobby as a profit-making business. It is no fault of the entrepreneurs who run these companies that they can't afford high-powered advertising agencies to write and produce their ads . . . marketing and research consultants to determine the sales potential of products and to see that they are made and delivered on a schedule . . . professional writers to prepare spec sheets and ad brochures . . . etc.

Few men have had the experience it takes to be familiar with all of the aspects of managing a manufacturing firm . . . they may be good engineers . . . or good salesmen (has there ever been one person good at both?) . . . or they may know marketing . . . yet, when they start their own company, suddenly they are expected to be experts in all of these fields, each of which takes years to learn. They also have to know accounting, production, corporate financing and management, stocks and bonds, how to let contracts, printing, packaging, shipping, etc. Just the business of getting familiar with shipping routines is a job in itself, with hundreds of trucking firms to sort out, a weird assortment of mail rates, UPS rates, etc.

Is it any wonder that many of the ads for ham gear are written more from the viewpoint of the manufacturer than from the prospective buyer . . . you? Is it any wonder that getting information about a new product is sometimes an almost impossible exercise? The ads say little; you send for info and either get nothing or else perhaps a copy of the ad. Here you are waving your money and the manufacturer seems to be doing everything he can to push you off.

Add to that the problem of getting delivery. Maybe you decide that you really must have a certain rig. You try to find a dealer ad for it and there isn't any. Or perhaps you do find one, call the dealer, and find that he thinks he will get a unit for you in six weeks (six months is not unusual on some gear).

A POSSIBLE CURE

One thing that might help this whole situation would be some feedback to the dealers and manufacturers of how you, the customer, feel about what is happening. In practice, we've been doing quite a bit of this already, but without any serious organized effort behind it. Many readers, when they get frustrated enough, write to us and plead for help. In many cases we have been able to break things loose.

It seems to me that this should be expanded. I think that the industry would react well to better feedback from customers. I may be biting off more than I can chew (I do that every now and then), but I'd like to enlist your cooperation in an experimental feedback test.

First, there are the ads. If you are unable to find an ad for something you want to know about, drop me a line . . . mark the letter "Feedback" so I will give it priority. It is awfully frustrating to want to know about something and have to look through a year of back issues to try and get data on it. Manufacturers should advertise up to date listings of gear and prices so they are easily available.

If the ads do not tell you what you want to know, write Feedback. Ads should be written from your viewpoint, not the manufacturer's . . . they should explain what the benefits are to you in using the gear, what it costs, and where to get it.

If you send for Reader's Service (and I've been meaning to speak to you about that . . . you have *not* been sending in your reader's service coupons and I know who you are, you slacker) and info is slow in coming or insufficient, write Feedback. That holds for RS for any hamrag, by the way, not just *73*.

If you have trouble with any dealer, write Feedback. Please be sure that you are being absolutely honest with me . . . if you are screwing around with a dealer and are trying to pull a fast one, don't bring me into the hassle. Be sure you are honest about this and have not been fooling yourself because you pulled a stupid stunt and don't want to admit it. I pull 'em too and it is painful to face up to such things. The motto on my wall is comforting . . . "Intelligence is No Impediment to Stupidity."

If you get spec sheets or brochures which leave you cold, write Feedback. If you get hung up with a rig or kit which is a rip-off, write Feedback.

As far as I know, *73* is the *only* ham magazine which puts its loss of money where its editorials are . . . *73* refuses to run ads for firms which appear to be ripping off the readers . . . or causing them severe headaches . . . or seem to be ripping *73* off. It only amounts to a few lost pages of ads a month . . . perhaps a loss of about $5000 a month in ad revenue, about the cost of a 32 page section of the magazine. Would you rather have another 32 pages of magazine and have to worry about being ripped off by an advertiser?

Send your comments to:

FEEDBACK
73 Magazine
Peterborough NH 03458.

One other thing . . . please don't write and ask which firms are not permitted to advertise in *73* . . . our lawyers insist there is no way to pass along this information without opening ourselves to possible legal harassment. Sorry about that.

CHARLIE THE BOOTLEGGER

The anarchy on the CB bands promoted by the FCC's giving up on any serious effort to contain the action there seems to be spreading . . . to the ham bands. Not that we haven't been sort of expecting this.

The use of Yaesu ham rigs for CB sideband is proving a serious temptation for some of the more adventurous CBers. When they run out of steam on the 23 CB channels they start tuning the 10m and 15m bands and hear a lot of silence. What the hell, the FCC doesn't do anything to them on 11m when they ham, run high power and work skip, so they fire up on 15m and give it a try.

One group tried this in an outskirt of New York recently and got stomped by local hams who got the FCC into the act and squashed the CB expansion effort. We need a lot more hams, but that isn't the way to go about it. This was in Far Rockaway.

I'd like to hear from ham groups who are having problems with CB expansion . . . and what they have done about it. I have a feeling that it is time for the home building crew to get busy and come up with some good direction finding gear so we can form posses and find these chaps quickly. It may be that a visit from a half dozen or so hams will convince them to go back to the old 23. If it doesn't, the

FCC will need as much help as it can get in the way of names, addresses, recordings, etc.

Oh, before I forget . . . it is legal to make recordings of CBers on the CB bands if they are breaking the law. The secrecy rules state specifically that they do not hold if any law is being broken . . . and when was the last time you heard a CBer not breaking the law . . . at least by not using his call? There are no restrictions to making tapes of ham band activities . . . the secrecy rules exempt ham transmissions.

WHEN DOES MY SUBSCRIPTION EXPIRE?

Those two numbers under your call letters on your subscription label are the key . . . the first indicates the month and the second the year of your last copy . . . 56 would expire with the May 1976 issue. Now you know as much as we do.

A FIRST?

I claim the first bicentennial QSL delivery for 1976 . . . any arguments? The contacts were made at 0620 EST (no record, of course) and the *73* bicentennial QSL cards were delivered in person to AA1KPS and AC1PVF at 0727 EST January 1, 1976. The contacts were made on two meters from Peterborough NH to the stations in Somerville and Concord, Mass. The cards were delivered in Concord NH. Chuck, Sandy and I were on a field trip to check out some HTs under working conditions. Chuck, who runs Tufts Radio (New England's largest ham distributor), makes it a point to know how good the gear is that he is selling . . . and I have to know how good the equipment is so I know whether or not to accept ads from the manufacturers. Truly dedicated people such as us willingly give up our New Year's Day holiday to work hard under rigorous conditions for your benefit . . and to get in a little skiing.

SAROC — AN EXPENSE ACCOUNT VACATION

After skipping the SAROC hamfest for several years I made the trip down again to see what, if anything, had changed. Not much had. FM has taken a back seat to microprocessors in the exhibits, but that was to be expected since this is the wave of the future for amateur radio.

Exhibitors were enjoying the pleasures of Vegas during the evenings and griping about the scant turnout of hams during the days. January is definitely the off season in Vegas and, other than amateurs and an embalmers' convention or something, not much was doing and the big acts were out somewhere else. Buddy Hackett (one of my favorites) was up in Aspen skiing.

The Smothers Brothers were there. I've been one of their fans for many years . . . starting with their record albums, way before they got into TV. They were great, as usual. I understand that Dick is an amateur, by the way.

Other than the few manufacturers' exhibits, little seemed to be doing with the hamfest. The biggest attractions were the microcomputers . . . one by Hal using the Motorola 6800 chip had a first rate game of 21 set up . . . most appropriate for Vegas. It afforded an opportunity to gamble without losing money . . . and that is indeed unique in that city. Not that I should gripe about the gambling . . . this time I won.

That's right! And at the game giving the worst odds in town . . . Keno. Along about my third $1 game I came up with four out of four numbers and an amazed cashier paid out $114. I was so flabbergasted that I put some dimes in a slot machine and made a bingo there too for $10 more. I changed it all into bicentennial silver dollars and had the whole works stolen a couple days later out of my hotel room. Easy come, easy go.

The MITS systems were on display, being pushed by The Computer Store of Los Angeles. This was my first look at the MITS Altair 680 (using the 6800 chip) . . . surprisingly small package. I got my first look at the Jolt computer. It uses the Fairchild F8 chip and was an impressive unit. I'd have pictures of all this for you, except I didn't lock my cameras up in my hotel room and they got swiped along with the bicentennial silver dollars. From now on it's a metal suitcase with a good combination lock and a bicycle locking chain to go around something in the hotel room which can't be removed. If they want my suitcase they'll have to take along the sink.

SAROC is a nice expense account vacation for the ham industry.

ITU PREPARATIONS

Past amateur preparations for International Telecommunications Union conferences have been less than minimal, despite $100,000 being set aside for just that use. We went into the last big frequency conference in 1959 with virtually no planning and with no requests for more amateur bands which could then be used as bargaining chips. Through an incredible lucky fluke, U.S. amateurs did not lose out that time.

The more recent satellite ITU conference had almost as much planning and the end result was that amateurs suffered a catastrophic loss . . . 99.99% of the UHF frequencies were lost, with only a tiny segment on 450 MHz remaining. All the great ideas for worldwide amateur microwave systems via satellites went down the tubes . . . all because there was no planning, even though the money was there to pay for it.

Happily, things look brighter this time. The next ITU conference is scheduled for 1979 and an amateur committee has come up with some requests for expanded and additional ham bands. If this looks extravagant, remember that at one time amateurs had 7000-8000 kHz and 14,000 to 15,000 kHz, too. And how about that ULF band!

The frequencies suggested in the first draft of the amateur WARC-79 allocations table are as follows (from the West Coast DX Bulletin*):*

160-200 kHz	*420-450 MHz*
1715-2000 kHz	*902-928 MHz*
3500-4000 kHz	*1215-1300 MHz*
7000-7500 kHz	*2300-2450 MHz*
10100-10600 kHz	*3300-3500 MHz*
14000-14500 kHz	*5640-5925 MHz*
18100-18600 kHz	*10000-10500 MHz*
21000-21500 kHz	*24-24.25 GHz*
24000-24500 kHz	*48-50 GHz*
28000-29700 kHz	*71-76 GHz*
50-54 MHz	*165-170 GHz*
144-148 MHz	*240-250 GHz*
220-225 MHz	*300 GHz and up*

Looking West

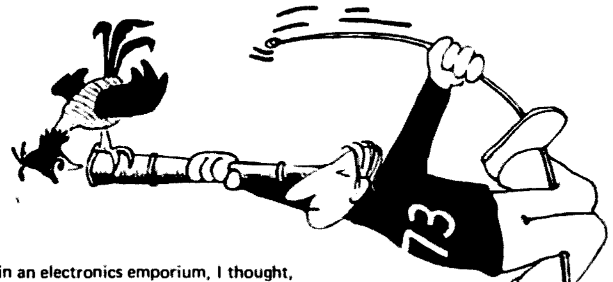

Bill Pasternak WA6ITF
14725 Titus St. #4
Panorama City CA 91402

Now that was one #$&% of a football game they played out here today. Possibly one of the biggest upsets in football history. If you are one of the few that missed it, I am talking about the Rose Bowl game played here in Pasadena but a few hours ago. Ohio may have gone in as the favorite, and that first half it seemed like our local UCLA team had forgotten how to play football, but somewhere "the gods" were smiling on us and what took place in that second half. Well, I guess it's one for the record books! You can't imagine in your wildest dreams the joy that abounds in LA tonight. "Our boys done did it, so celebrate!"

We have spent a lot of column space the past few months on the topic of amateur radio public relations — getting the word out to the general public. I had intended to devote this month to but one topic: VHF-FM in the sunny southland, and in fact most of this column will be just that. However (oops, there's that word again), I came across a book in my travels around the San Fernando Valley that bears mention.

Actually, it was just after mailing last month's column to Peterborough during my lunch hour. Having wolfed down one of Grassi's fantastic Italian sausage sandwiches and a Coke, I still had about 25 minutes before I was due to be back at work. I decided to stop by Sandy's Electronics in Canoga Park to see if any new and interesting goodies were to be found. I was browsing through their bookcase when my eye was caught by a rather interesting title, *The Super 8 Handbook.* Rather an odd volume to find in an electronics emporium, I thought, as I gave it the "once-over" . . . looks interesting . . . hmmmmm . . . five bucks . . . hmmmmm . . . why not?

Little did I know the goldmine of information that I acquired when I paid my $5 to the cashier and went merrily on my way back to "ye olde saltmine." It was during my afternoon break that I began to get a glimmer of what I had in my hot little hand. First, it reads like I try to write — simple and to the point. You do not have to be a pro in the motion picture industry to grasp what the authors are trying to say. It starts by explaining in simple terms what Super 8 MM photography is and how it differs from other motion picture formats. It takes you step by step through every phase of Super 8 photography, and when the need arises, it stops to explain itself.

Want to know how to set up proper artificial lighting? See page 79 under filming techniques. Want to learn how to edit your film so that no splices are ever seen? Start on page 155 and keep going. There is even a construction project or two such as an inexpensive home brew camera dolly. I cannot begin to tell you the wealth of information cleanly and clearly packed into those 240 pages by the authors

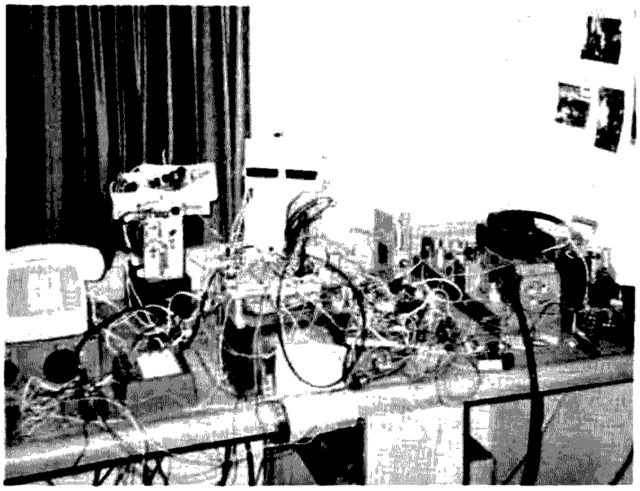

First, a visit to the site of the ultra-sophisticated Sylmar autopatch repeater WR6AJP.

George D. Glenn and Charles B. Schloz. They are award-winning Super 8 filmmakers and tell a lot about how they did it in this volume published by Howard W. Sams & Co., stock #21001. If what I have written in the past about this motion picture format interests you, then I suggest you get a copy of *The Super 8 Handbook* even before you hit the local photo shop to look at equipment. If you do, you will know a lot about what you are looking for before you enter the door. For what it's worth, I hereby give *The Super 8 Handbook* ten gold stars and the "official" (?) Looking West recommendation. Now on to FM . . .

Let's wind up the coverage of the Ventura Convention and the SCRA meeting held there. As to the convention itself, I would be a poor person to judge, as I arrived late and never got a chance to visit the exhibits or partake of the seminars. In the gripe department, I have only one, and it has to do with the banquet. I am not one who believes that at an affair such as this one should have to stand in line, cafeteria style, to get one's dinner. To me, "dinner" or "banquet" suggests service to your table and all the trimmings that go with it. Again, this is purely personal, and the only negative I came upon that evening. On the positive, the food was good and the people sponsoring the convention came up with a special after-dinner treat that more than made up for the food line.

Now I ask you, how many conventions have you been to where you ate good food, listened while a keynote speaker like Roy Neal K6DUE held your mind captivated, and ended the evening with Alvino Ray and his orchestra? That was the bill of fare presented for those attending Ventura '75. I definitely enjoyed it; I think you would have, too. As I write this, close in my mind is SAROC '75 to which I will soon travel. Well . . . that report is next month!

Meanwhile, back at the SCRA meeting . . . quite a bit of time was spent discussing the problem of uncoordinated repeaters, but no concrete solutions to the problem were derived. The problem is that voluntary frequency coordination is just that — voluntary. It's a handshake among amateurs, and when one or two amateurs don't want to partake of that communal handshake, what can you really do? Keep offering that "hand" is one thing that most everyone attending agreed on. Keep trying to develop lines of communication with the owner of such a system, and do your best to make him "see the light." In one such conflict, it looks as if this approach is meeting with success. When they realize it is to the mutual benefit of all parties, amateurs really can learn the art of communication. Communication is the first step toward negotiation, and negotiation is therefore the first step toward solution.

Personally, I tend to prefer having any differences within our "community" settled from within. It is now a historical fact, one well proven by past experience, that when you are forced to go to the Commission for assistance, most of the time this assistance comes in the form of rather stringent regulation. After having fought hard for a good number of years to eliminate all or at least most of the effects of 18803, we do not want to make any move now that would turn the clock back for us.

It is still my belief that the simplest solution lies in some form of official recognition by the Commission of the work being done by regional frequency coordinating organizations. Note that I say coordinating organizations, not individual coordinators. I feel very strongly that a coordinating organization, whether it is called committee or council, should be made up of representatives from not only the ranks of repeater owners, but also from regional organizations representing all interests (repeater FM, simplex FM, remote base operation, AM and SSB use, and other more exotic modes). The concept of the individual entity (amateur) acting as an area coordinator is one that I personally do not agree with. Not that there have not been some truly outstanding people taking on this burden and doing an exemplary job, but is it fair to all? Is it possible for any individual to be totally objective in a situation where possibly one of his or her best friends is involved? Remember, coordinators like all of us are human beings — people — and no person that I know could be termed as perfect. I know that I am not, and I doubt if I could remain totally objective in every case or in every dispute that would come my way if I were a frequency coordinator. It is for this very reason that I doubt if the Commission would be inclined to "officially recognize" any one individual amateur in a given area as "supreme voice" on such matters.

On the other hand, a coordinating organization, one made up of all interested inhabitants of a given segment of spectrum, is a horse of a different color. By the very fact that no two people think exactly alike on all matters, you have built-in controls and are forced to develop organizational guidelines directed to benefitting the vast majority. Giving each repeater owner an equal voice in all matters affecting VHF-FM repeater operation has proven its true viability. I suspect that this simple precept has been the key of success for the SCRA and other similar organizations. Now, with the recent introduction of a number of multi-mode all band coverage radios for two meters (and unless I miss my guess, similar equipment in the future for 50 MHz, 220 MHz and 450 MHz), it will soon be incumbent upon anyone involved in frequency coordination to take steps to insure the sanctity of users of these other modes, for as more and more of such radios proliferate among our numbers, this will become a necessity. If organizations that are now involved in repeater frequency coordination take the initiative and solicit the most knowledgeable users of these other modes into their organizations, it may well prevent chaos from developing in the future. It will also show the Commission that repeater/FM enthusiasts are not isolationists. It will show that we are interested in the welfare of all spectrum users, and may be the kind of key necessary to obtain that sign of official recognition that is now so necessary.

If this sounds a bit different than the recent ideas set forth by the ARRL, I must at least credit them for putting "the bug" into my head about where the future might lead. While the basic ideas are sound, from the foregoing you probably guess I do strongly disagree with the concept of a Regional ARRL Appointed Coordinator. No matter how strong the controls from Newington, it would be too easy for a monarchy to develop should the wrong person wind up entrusted with the future of a given area. Rather, I would like to see the League solicit the formation of coordinating councils in areas now served by a single amateur acting as coordinator, and simultaneously recognize existing councils as the official representatives of those areas in which such councils exist.

Step two might be the formation of four area-wide organizations (i.e., East Coast, Mid-West, Mountain and West Coast) that would be made up of representatives of the smaller regional organizations. This would serve two purposes. First, it would let "neighbors" get to know one another and at the same time provide a platform where problems common to all in that area could be worked on. On this level, lines of communication could be developed between the four regional organizations and an ongoing exchange of information vital to standardized national growth could be maintained, and then disseminated to the local organizations. Meetings of such area-wide organizations could be held in conjunction with a major

Next, a late night interview with WR6AJP's licensee, Jim Hendershot WA6VQP.

amateur convention within that geographic area, or better yet, by use of longer range communication on 75 SSB or whatever you please. Actually, regular on-the-air meetings would accomplish a lot more than one or two meetings eyeball each year, but these are just suggestions, and admittedly open for improvement. Anyhow, going one step further, that being to a national and possibly international level, I can foresee the top echelon being a modification of the now existing VHF Repeater Advisory Committee, i.e., a reorganization to a VHF Spectrum Utilization Advisory Committee. Rather than being appointed by ARRL HQ, this "top drawer" group would be composed of four or five "elected" members of each area-wide organization and would be assigned the task of dealing with *all* VHF/UHF problems that required handling on a national basis. In addition, since VHF operation is not isolated to the USA, I could see an open invitation being given to foreign representatives of VHF/UHF interest to sit in and exchange ideas with us. Similar to the way that the ARRL Board of Directors meet, this committee could hold similar meetings either quarterly, semi-annually or annually as necessity would dictate. Travel costs for such national meetings could be generated through shared funding on the part of each local organization or that in combination with partial funding from the delegates themselves.

Note the difference: From the "grass roots" local level on up, no one individual is appointed. On every level, those in positions of power are elected by their peers. There is no one individual anyplace with supreme power over anyone. Rather all decisions on each level are handled by majority vote resulting in, basically, a democratic republic for the VHF-oriented amateur — one with the possibility of developing worldwide ties. In this bicentennial year, not a bad goal to shoot for. As a "long-standing" League member of some two months now, I offer these suggestions to both them and you for consideration, in the hope that they may be of some true utility.

LOOKING WEST VISITS AN OPEN AUTOPATCH AND VICE VERSA

Ever been visited by a repeater? Believe it or not it has happened more than once around this QTH and I have the pictures to prove it. OK . . . to be honest only once did a complete repeater, along with the person that created it, pass by to spend an evening, that being about three months ago when Mark WA6DPB stopped over to show me a new creation for 420. Got some good color slides of that one and perhaps we can get a "cover" out of one of them in the future. Maybe . . . huh, Wayne?

Anyhow, it was a visit by Jim Hendershot WA6VQP, earlier this evening that has lead to the following. Jim, better known around here as "Jr," passed by to show me the new receiver that will soon serve as the "ears" of his two meter open autopatch repeater system WR6AJP — 146.865 in — 146.265 out. Jim's system Is located here in the San Fernando Valley in an area known as Sylmar, basically the northeast corner of the Valley. AJP is one of the Inverted California Plan split-split systems that has proven that what was thought up out here really does work — an open autopatch on an inverted split-split that operates 24 hours a day without any adjacent channel problems. WR6AJP is one of two fully open autopatch systems serving the Los Angeles metropolitan area, the other being WR6ADH on 147.72 in — 147.12 out. There is a third autopatch system, WR6AKB in Palos Verdes (146.745/145), that also purports to be an open autopatch; however, its owner requires regular users of the autopatch facility to become "club members" and provide ongoing support for the "club." To my way of thinking, this latter stipulation takes WR6AKB out of the truly open autopatch category even though the repeater system itself is open access carrier squelch. By contrast, both ADH and AJP operate under the premise that voluntary user contribution must support their continued operations. While I have never spoken with Wayne Curley WA6NRB, owner of ADH, on this matter, the following from the June 16, 1975 SWAPS NEWSLETTER is a very sensible approach in my opinion.

"What is my fair share of the phone bill? The amount of the donation in support of the phone bill is based on how much a user uses it. Each minute the phone is in use is 6¢, whether he calls Whittier or Hewhall. Of course, there is the cost of the basic phone service, plus the coupler, etc., which is part of the phone bill also. With a totally open autopatch system, support is strictly voluntary. So just remember the more calls, the more time, the more money."

Note the phrase "strictly voluntary." Simply, if you are one of those stalwart souls that is providing your area with open autopatch service, technically, you are doing so "out of the goodness of your heart," and user support of your operating expenses is something really up to the whim of your users. However, when one decides that he will become a regular user of an open autopatch system, he takes on a very important moral obligation to show some form of support. No open autopatch can long survive unless those amateurs making use of its facilities give ongoing financial support. I personally look at any autopatch system as a friend doing me a favor by supplying me with an extension telephone in my car. If it were an extension of my own phone and I used it, I would have to pay the costs involved. Now if a friend were to put an extension of his phone in my home, and I were to make use of said phone, I would be morally obligated to pay my share of the bill. The guy providing you with an open autopatch is doing just that — giving you an extension telephone that you can make use of while mobile and the aforementioned moral obligation does indeed exist. The responsibility for defraying costs rests on the shoulders of all that partake. I would much prefer to see open autopatch repeaters prosper on the basis of voluntary user contribution rather than the road that WR6AKB has gone, since when an autopatch system is forced to form a "club type operation" to insure survival, and even if such a club is open to membership by any interested amateur as is the case with AKB, can it truly be said that such an autopatch repeater is an open autopatch? If the very concept of the open autopatch, a la the ADH and AJP type operation, is to survive this initial time period, it is up to those that make use of these systems, up to you.

I might be sticking my neck out a bit, but the aforementioned SWAPS NETWORK June '75 NEWSLETTER has a lot of good information about operating on an open autopatch repeater with some very good basic common sense ideas on this topic. Perhaps a note to them at PO Box "B," San Gabriel CA 91778 will bring you a copy if any are still available. If not, I will try and find space in future columns to print more of the SWAPS NETWORK's ideas on open autopatch repeater operation.

The story of WR6AJP itself is an interesting repeater story and it will be part of next month's Looking West, along with what took place at SAROC, and if space permits, a few other goodies. In the meantime, I hope that the pictures entice you enough to be back next month for the complete WR6AJP story. No, that photo of the machine itself is not a put-on. What is pictured is a fully operational two meter open autopatch that has never "been down" due to equipment failure! Who said the art of home brew is dead?

Tracking the HAMBURGLAR

STOLEN: RF Communications, Inc 2m FM rig, Model RF-403. Four channels. Crystalled for 16.76, .94, 148.01, 143.99. Noticeable "carbon mike" audio quality. Contact W3DTN.

TAKEN: IC-21 S/N 6047 also hi-lo police monitor suspects two male Negros, driving 1968 Ford Falcon dark green Ohio license 654283. Carl Scheff WB8LTN.

MADE OFF WITH: Regency HR-2, Heathkit linear attached S.S.N. 405-46-6000 inscribed on both units. John Fornash WB4TQH.

ABDUCTED: Regency HR-2-A S/N 040842. Earl Nichols W4PII.

SHANGHAIED: TR-22-C S/N 121124 on 9/3/75. Jack Moorhouse W8IHQ.

ROBBED: Clegg 27/B S/N 27014 3313, Tempo 220 S/N 5171, also Regency 440 no serial number available. Gorden Plainfield VE3HKE.

STOLEN: Icom 230 S/N 2403241; IC-3PA (Icom) power supply S/N 1105929; Drake TR-22C S/N 940898. These items were stolen as of 11-7-75. I would appreciate any information concerning these stolen items, as they were uninsured and a heavy loss. Please contact me, or Wilshire Division/Los Angeles Police Department. Michael Mockler, 121 S. Oxford Ave., Apt. E, Los Angeles CA 90004. Phone 213-388-6584.

FILCHED: Kenwood TS-520 S/N 231023; Icom IC-22 S/N 10718; KW107 supermatch tools, books, etc. Taken from my car in Toronto November 1975. Any information please contact Metropolitan Toronto police. James Knott VE3CVM.

PILFERED: KDK 144 — 10SX S/N 5446. Taken from my car in the Chicago area on 10-25-75. Nick Kalafice W0OZZ, 117 West Glencrest Drive, Mankato, Minnesota 56001. Phone 507-387-2279.

PLUNDERED: Drake TR-72, S/N 860589. Bob Armontrout WB8TNZ.

MISAPPROPRIATED: HR-212 S/N 24-00355. Don Tacy WA8UKS.

KIDNAPPED: Drake TR-22 S/N 430470 large mike conn., also mini phone jack. Bart Rosenberg WA8HKO.

PILLAGED: Unimetrix Ultra Comm. S/N D90325, eight sets xtals. T.T. pad two separate phone jacks, mike had a piece broken on top. Ross Fox W8PZX.

RIFLED: Lafayette HA-146. T.T. pad, ball point marker on deviation pod, phone jack in rear, all CRA xtals plus. Jim Frey WA4LBI.

HIJACKED: Standard Mobile model 825-MA, S/N 205258 written on inside of chassis "K8UYQ" dent on backside lower left, T.T. pad "K8UYQ" on inside of box next to speaker jack. John Zisman WB8JWD.

RUSTLED: Unimetrix Ultra Comm no further info. Donn Nottage W8JGP.

Autobiography of an Ancient Aviator

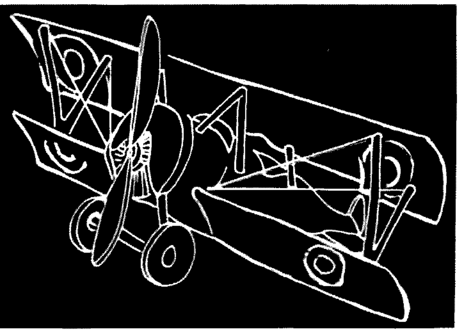

W. Sangen Green
1379 E. 15 Street
Brooklyn NY 11230

EARLY AERONAUTICS BRANCH, U.S. DEPARTMENT OF COMMERCE

In the early part of its organizational phase, the Aeronautics Branch of the Department of Commerce was very short of help. Applications for pilot, aircraft and mechanics licenses were pouring into the Washington office. They had the country divided into regions with a Supervising Inspector in charge of each. About all the Washington office was able to do with these hundreds of applications was separate them according to regions, then ship them out to the Supervising Inspector of each region. Since the District of Columbia was in my region, I would stop in at headquarters as often as necessary and pick up my new applications, sort them out and make up itineraries.

The pay on this job was something like $300 a month to start. You were provided with a book of government travel requests to take care of transportation. When you were away from your official headquarters you could collect $6 per diem to cover food and lodging, tips (not over 25¢), taxies, street cars, buses and local phone calls (not over 10¢) on an expense account. Don't you wish you had a shot at a deal like that?

My earlier trips were made by train and bus. One I remember quite well took Frank Jerdone and me to various places in North Carolina. We started at Raleigh and split up to cover two itineraries. Mine took me to Winston-Salem, Greensboro, North Wilksboro, Maxton, Hamlet and back to Raleigh. I arrived at North Wilksboro a little before noon. I had one applicant there for aircraft and pilot licenses whom I tried to reach by phone. No phone. So I went to the local police station, identified myself and asked if they could help me locate the fellow. They "hemmed and hawed" and said they would see what they could do. I told them I would be having lunch at the restaurant down the street and would appreciate any information they could get me. Well, while I was having lunch, a fellow came in and sat down at my table. He asked me why I wanted to get in touch with the applicant. I told him and showed him my ID card. "Oh," he said, "You're from the government up in Washington?" I said I was. Then he said "Well, the feller you wanted to see won't be available. There's a bus leaving for Winston-Salem in an hour and my advice to you is to be on that bus." I didn't argue with him. *I was on that bus.* The remainder of that trip took us to Rocky Mount and Norfolk Naval Air Station, where they gave us a lift over to Langley Field. After a weekend at Langley renewing old acquaintances and three working days at Richmond, we returned to home plate in Washington.

Since quite a few pilots at NAS Norfolk and Langley Field had expressed a desire to obtain a civilian pilot license, I got approval to spend a few days there checking pilots for transport pilot tickets. The Department assigned me a brand new J5 Laird for the trip. Now the Laird was a beautiful shiny ship, *but* it was an open cockpit job with no heater; the month was December and no winter flying clothes went with the machine. I had my own helmet and goggles so I bundled up as best I could in my business overcoat and set sail for Langley. The temperature on the ground at Bolling was about 45° so I flew low to Langley and didn't suffer too much. The trip back to Bolling a few days later was a different story. It was around 30° on the ground at Langley the morning of my departure for Bolling (Washington). As the trip progressed, I got colder, and the colder I got the more I leaned on the throttle, so I made the 130 mile trip in about an hour. That was unquestionably the coldest ride I ever had. They had to help me out of the ship at Bolling.

First thing I did upon my arrival at the "Deep de Com" hangar was to ask the man in charge to "scrounge" some winter flying gear for me. He said he thought he could help and this is how he did it. It seems that only a few days before, there had been a fairly extensive fire in one of the Bolling Field hangars. Now this is an event that every Supply Sergeant on the field welcomed, because it enabled him to claim that almost every item in his charge that had been lost, strayed or stolen was destroyed in that hangar fire. So all my man had to do was to get a winter flying suit, boots and gloves from a Supply Sergeant who would survey them as having been lost in the fire. I got my winter flying gear for a $10 bill. Since this was some 48 years ago, I guess that the statute of limitations will cover all participants.

As of March 1, 1928, my official headquarters were changed from Washington to Philadelphia. They also issued me a J5 Travelair. I was glad to swap the Laird for the Travelair. The Laird was a much better looking plane and it was faster, but the Travelair was much better for getting in and out of small fields — particularly the many where you had to land up hill and take off down hill.

After four months of operating out of Washington as a temporary headquarters, I was pleased to get the permanent assignment to Philadelphia. First thing I did was to rent a small apartment and move Wayne and my wife, Cleo, to Philadelphia.

The Ludington Philadelphia Flying Service operated the municipal flying field just south of the city. Bob Hewitt, an old friend, was the manager. They did a lot of flying instruction, passenger hopping, cross country work and had an excellent service and repair shop. Bob was kind enough to provide me with a small room for a field office, complete with a desk, chairs, etc. Everyone was happy.

Next month more about the rest of my time with the "Deep de Com" at Philadelphia and a first class hunting trip.

LOOTED: Heath HW-202, series 01324. Setup for 34/94, 31/91, 22/82, 16/76, 28/88, 38/98. Stolen January 1, 1976. Also taken: a first aid kit for volunteer rescue squad. Info to Blacksburg Police Dept. Blacksburg VA 24060, telephone (703) 552-2311. Douglas Hall WA4UNS/P4

ROBBED: Drake TR-22C, S/N 850265. Taken in San Diego. Reward offered. David M. Anderson WA6KHH/6, PO Box 1097, Lemoore CA 93245.

KIDNAPPED: Robyn GT VII B 5001-005801. Stolen September 21, 1975. Mark Jacobson, 2133 Riverwood, Okemos MI 48864.

SHANGHAIED: Courier Traveller II, S/N 12Y21737. Taken from my car in Tamaqua PA on 10/22/75. R. A. Hutton, Box 197, Schnecksville PA 18078.

MADE OFF WITH: IC-230 S/N 240 1926, Heathkit HWA-202-6 colinear, and Data Tone 2 touch tone encoder that was stolen from my car in Tampa FL on October 31, 1975. Report filed with Hillsborough County Sheriff Dept. Bud Holman WA4ASJ, PO Box 698, Vero Beach FL 32960.

ABDUCTED: Drake ML-2 S/N 11603, 17 crystals, coax line from mike input to jack on rear of case. William B. Tilghman, 448 W. Oak Ridge, Apt 201, Orlando FL 32809.

SWIPED: Lafayette HA-146 nine sets xtals. no mike, 115.70 installed in priority position. Lou Rauh WB8WBD.

MISAPPROPRIATED: KDK 144-10SX S/N 5446. Taken from my car in the Chicago area on 10-25-75. Nick Kalafice WØOZZ, 117 West Glencrest Drive, Mankato MN 56001. 507-387-2279.

SNATCHED: Drake TR-22 six channel S/N 610017 I.D. perm. G.E. nameplate attached, has CRA repeater xtals plus 46 simplex and also 66/06. Roger Jollis WB8HUP.

TAKEN: Drake TR-22-C, S/N 810233, broken antenna, trimline T.T. Pad attached all CRA Xtals plus. Steve Coulson WB8QOG.

PILLAGED: Midland 13-505, S/N 030647. Len Malone WB8PTP.

RIFLED: Drake TR-22-C, S/N 851327, large ac plug red power cord, matching net, included for synthesizer in unit. Dr. Ed Casey W8DWJ.

HIJACKED: 12 channel Midland Mobile, no further info. Mike Moore WA8ZPY.

RUSTLED: Heathkit HW202 series 00316 stolen from Newport Shopping Center. Warren Peterson WB4VRJ.

SWIPED: Regency HR-2-B S/N 49/03875, also HR-2-A amp. S/N 11502346. Bill Mell WB4KQB.

BURGLED: One E. F. Johnson Msgr III "CB" transceiver, converted for use on business band, containing crystals for 27.41 and 27.43 mcs. (also some CB channels), S/N 143C080-69008. Also has my name and social security no. "Harold Dalton, 247-56-8723" engraved inside radio. Taken from my car in Greenville SC 12-13-75. Harold Dalton WN4JQR/KWD593, Rte. 5-Box 83A, Pickens SC 29671.

LIFTED: Standard 826 MA, S/N 208185 was stolen from my car October 31 while it was parked in the parking lot of Dow Radio in Pasadena, California. Contact Gary Jaegers WB6WDV, 870 E. Alameda St., Altadena, California or the Pasadena, California police department.

be my guest

visiting views from around the world

Chalk It Up As A Lesson

"Hey honkie, whatcha doin' down here?" is not an uncommon phrase heard in the neighborhood where Mike (WB6ZHD) and I found ourselves. We were there to supposedly "help" a newcomer on WR6ACS get his new rig more on frequency. Since he had given his call as KL8436B or some such, it isn't too difficult to figure out why we placed ourselves in this neighborhood late one afternoon. We had a San Francisco policeman with us.

This story has an unfortunate ending for some unlucky ham somewhere that has had his IC-230 ripped off. Of course, the metalized sticker containing the serial number was merely peeled off. Why doesn't some ham club start a project to encourage manufacturers to *engrave* serial numbers on the chassis or some other hard-to-replace part? But more important, why don't all hams engrave their driver's license and the two letters signifying their state on every easily saleable item in their home???? According to several police departments, the driver's license is much easier to trace than your callsign. It takes approximately 15 seconds to trace any driver's license if you indicate the state. It might take weeks to trace an owner by his call letters. Quite often the well-known callbook is outdated by the time it gets into print, and, believe it or not, a lot of policemen never heard of the callbook.

I personally removed both covers of this IC-230 looking for some kind of ID. There was none. The policeman called in a description of the rig — they had nothing on it. Of course not!!! If it is originally stolen by a "professional" thief, he certainly transports it out of the area before he sells it. So there was nothing we or the police could do in this episode except congratulate the owner on making a good buy (at $150.00) and advising him of the illegality of operating without an amateur license.

You don't have to conceal your engraving; in fact, it is better if it is very obvious — on the cover, front panel, or chrome frame — the thief then has more difficulty in disposing of it. It *DOES NOT* make the rig less valuable if you decide to sell or trade it. Just give the purchaser a "bill of sale" or a note. Then, if it is stolen later, the police would of course contact you, and you would be able to steer them on to the next owner. Even if it has gone legally through several owners, if each passed on a bill of sale with it, it could still be traced to the final owner easily, and believe me, the police would do this bird-dogging gladly when they suspect they have a thief. It may be their best evidence.

Think about it — the price of an engraving tool is a hell of a lot less than insurance, and quite often more apt to get your equipment back. Don't overlook engraving your TV, your tape recorder, your sewing machine, typewriter, etc.

The lucky new owner of that IC-230 is a legitimate CBer, and thought he was buying a CB rig. Now I do *NOT* want to hear descriptions of all of the stolen IC-230s across the country. Just chalk it up as a lesson to engrave your driver's license and state on your next one.

Dick Altman WA6AXV
San Francisco CA

Let's Grow Up

Reprinted from The Canadian Amateur.

Are we mature enough to run our own show or do we always have to be told what to do?

For many years now, in fact far longer than most of us can remember, the lower amateur bands have by regulation (law) been subdivided into "CW" and "phone" segments. Initially this was done to provide "guard" bands to protect services on adjacent frequencies from phone sidebands and splatter. But now the bands have been officially divided up between CW and phone mainly because of the inability of amateurs themselves to sort out and amicably resolve their own problems.

Why is it that in Canada (and the U.S.) it is necessary to have *laws* that tell us what we can and cannot do within our allocated frequency bands? Amateurs in other countries seem to be able to carry on successfully without the need for such official intervention. Surely our amateur fraternity has now reached the age of self-determination and no longer needs to be *told* what or what not to do. Why should the DOC have to expend many man-years of work (and thousands of dollars) in an attempt to solve an unresolvable problem? They never will be able to satisfy everyone. We can do the job just as well (or maybe better) ourselves.

It is my firm belief that CW and phone sub-allocations (except for band-edge guard bands where necessary) should not be made part of official legislation. If we are not mature enough to sort this problem out among ourselves perhaps we should not be enjoying the hobby. If we carry on in our present regimented fashion, CW may soon be prohibited in certain segments of the bands, and there will be sub-bands for SSB, USB, LSB, RTTY, television, etc.

So what if there is some interference between CW and phone operations — is it all that terrible? It may even improve our operating techniques and capabilities.

Such an "open" band concept does not in any way affect the incentive concept since phone and other privileges would still be allocated according to the qualifications (class of radio operator's certificates) and experience of the licensee.

Legislatively this can be easily accomplished by simplifying the list of amateur frequency bands in the (Canadian DOC) General Radio Regulation, Part II, to show only the complete amateur bands and by deleting Schedules II through V. When an operator becomes appropriately qualified, he would be authorized to operate phone on any one or more of the applicable high frequency bands without reference to any specific segment of the bands.

These are strictly the opinions of the writer, who has listened to the pros and cons of this so often vociferously argued subject for these many years, as well as having been involved, from the official side, in trying to find an acceptable solution to the multitudinous "demands" of groups and individuals within the fraternity.

Let's grow up and do the job ourselves as responsible and reasonable individuals.

A.P. Stark VE3ZS
22 Lyall St.
Ottawa, Ontario
CANADA

Art is a retired DOC senior official. — Ed.

LETTERS

THE MAILMAN DIDN'T RECOGNIZE IT

What kind of a nut are you? I mean really you *must* be one to be against one of the best changes in format that you could possibly have made! I can now see the damn printing for a change!

This January issue is really great and I cannot fathom your having such a hang-up on going to the larger size. More room for bigger and better schematics, layouts, pictures and above all easier to read. Best move you could have made!

This issue has a lot in it, too. I am going to build the automatic dialer or something similar to it. I really enjoyed that article. Of the other many fine articles, one worthy of special mention, at least for me, is the one on "Module Kits – a Low Cost Homebrewing Breakthrough." I was interested in this article because it is what I have been engaged in for several months, but I am not as far along as G.R. and Bob. I haven't gotten to the packaging stage, yet, just the kits.

I just wanted to write and encourage you in the new magazine format. There are always some nuts who are against "everything" new, but I'll wager a donut that the great majority of your readers will be enthusiastic about the larger size!

Lon Allbright W6SLF
San Diego CA

Nice work! Your new format for *73* is F.B. Really like it.

F. Tuttle W8QLL
Midland MI

Got my giant issue today and those advantages you wanted are showing up. The mailman, who delivers my mail next door (he can't read), didn't recognize it: It arrived in perfect condition, for once. I don't know how long he'll be fooled! I found that it swats flies better than last year's model, does better no-nos on the kiddies, and makes great placemats.

Don't be too upset over the size; XYL says that quality not size is important (that's what she tells me). Some will like it; some will learn to like it.

Richard Fosburgh WN5PWE
Dayton TX

I received my January 76 issue of *73* and was pleasantly surprised at how easy the new size of type is to read. Please count me as one in favor of the new size, even though it will require new bookshelves for the shack.

Peter K. Von Hagen WA6HXM
Palos Verdes Pen CA

I just received my January issue of *73* and want to congratulate you and your staff on an outstanding job in making the transition to the enlarged format. With a background in journalism, I can appreciate some of the problems you must have had in making layout changes.

I had every expectation that *73* would continue to be a quality periodical, and it appears that I haven't been disappointed.

Dan Davis K3DSQ/4
Langley AFB VA

I like it! I like it! I like it! The new size. The articles. The projects! I even sent for QSLs and a new callbook from this issue.

Good before . . . greater now. Keep on . . . keeping on!

Don Dye KØJVE
University Park IA

I didn't think you could do it, but you did. You actually topped the November 1972 issue with the January 1976 issue. This has got to be the greatest issue of any amateur magazine in history.

There is no way of telling what the reaction will be to the new format, but for what it's worth, I like it. For one thing, the drawings seem to be quite a bit larger, and the older I get the more I appreciate things like that.

For another, the magazine seems to lie flat and open easier. This is reminiscent of the saddle binding you used years ago when you first started *73*.

I must admit I was a bit upset when the Nov/Dec 1975 issue arrived, but I understand the problem now, and this fantastic January issue more than makes up for it.

Bill Gulledge K5UAR
Downsville LA

Just got the January 76 issue. New format looks great!!

Glenn R. Kurzenknabe K3SWZ
New Cumberland PA

Your January 1976 issue is the best ever in the 13 years I have been a subscriber.

Harry Roblyer WØDLM
Burwell NE

I love the new format. Only one comment: Move the printing over toward the edge of the page. It would make it easier to read with one hand folded over. What ever happened to GRRREEEN? About time it came back I think.

Ron Veelik WA6LTH
Crestline CA

TREATED

I have recently treated myself to a 3 year subscription to your magazine after "sampling" it from the local newsstands for some months. *73* is a magazine in a class by itself. It is really great to be able to get hold of such a varied collection of "matter" every month. Your magazine has truly got something for everyone and really doesn't waste the volumes of paper that certain other ham radio publications do on useless chitchat. I especially appreciated the various articles on weather satellite receiving station construction by WB8DQT. I am now planning the construction of my own station using some of his circuitry and some of my own. I would like to suggest that WB8DQT consider publishing a book on the topic in the same way he worked on the SSTV handbook.

John L. Webster VP2DN
St. Augustine
Trinidad, W.I.

WB8DQT's new Weather Satellite Handbook *should be on the 73 presses right now. – Ed.*

SMELL NICE, TOO

Maybe all of the people who've built the SD Sales Clock Kit wonder, as did I, about what the devil you can house the clock in really fast and easy. Here's my idea, and it costs just about nothing.

Have someone give you either after shave lotion or all-purpose(?) lotion put out by English Leather in the eight ounce size. The cardboard box (which used to be real wood) is perfect for the SD circuit boards. The front cutout needed is almost exactly ½ by 2½ inches, and the whole job can be done with an X-Acto knife. No LED mask is needed: Just let the six displays poke right through the hole you've cut in the side of the box. If you cut the box right, you won't even have to fasten down the circuit boards; they'll fit nicely with friction between them and the cardboard.

I know that the clock case people will hate this idea, but why spend money when you can have a nifty case and smell nice, too?

Tom Donohoe W2NJS/WA1PXV
New York NY

GETTING OUT WHAT YOU PUT IN

Just had to pass along some "observations" regarding "Getting Out" in the January issue.

I firmly believe that Mr. Lichtgarn is a "quitter."

I was just around the 40 year old mark when I became interested in ham radio and, of course, it's hard to "teach an old dog new tricks." My line of work is about as remote from electronics as auto racing and ice hockey, so had to enter an entirely new and rather frightening world.

With the aid of a friend, VE1AMZ Clive Bagley, I was able to pass not only the "Experimental" but also the "Advanced" ticket. For those not familiar with Canadian rules, the code is 10 wpm for the "Experimental" and 15 wpm for the "Advanced." I can truthfully say that it was not easy for me and took a great deal of time and effort on my part. Now that it's over and behind me, I can sympathize with others having a rough time, but not quitting. I think the old adage of "you will only get out of something exactly what you put into it" would apply in this case.

I often remark to others that if my XYL, VE1BEV, can pass the exam, anyone can.

Hope I made my point clear without making it sound like I'm blowing my own horn.

Thanks, Wayne, and I like the new format!!

Ralph F. Campbell VE1QU
Dartmouth N.S.

I agree with your answer to Fred Lichtgarn. Anyone that doesn't have the patience to learn the code doesn't belong on a ham band. About your magazine – I'm glad it's around. It's what originally got me interested in amateur radio, and has kept me interested and working on my Novice license. I've already passed the code; the theory comes in 3 weeks. I hope to move to General in 6-8 months after getting on the air. Again, thanks *73*, for being around!

Jim Bay
Columbus OH

FAR AND AWAY THE BEST

Thought you might be interested in hearing the results of my letter about XU4XA that appeared in the Nov/Dec issue of *73*.

First off, I received several nice letters, but wonder of wonders, W8JTW (now WA2BRI) sent me a Xerox copy of one of my XU4XA cards and an original! He had two — I worked him when he was in Columbus, Ohio in 1939.

Then later, W3HTG, now W6HTG, and current chief operator at KPH, paid me a personal visit, and *he* brought me another XU4XA card, as he had two! He was in Atlantic City, N.J. when we were QSO.

W3LTH wrote and says old W8CRA, now W3CRA, is still hale and hearty and going strong in Pennsylvania. Also had a note from Ed Hopper W2GT — he is still quite active.

Now — if I could get a Xerox copy — or better yet — an original of my old XU8LR and XU8XA cards when I was operating in Shanghai, I'd really be pleased!

I still think *73* is far and away the best magazine published in the ham field, Wayne — I like the new and bigger size also.

Keep up the fine work, and I assure you I'll continue as a subscriber as long as I'm around.

Al Lower W6CLB
ex-XU4XA, XU8LR,
XU8XA, etc., etc.
3916 Arden Way
Sacramento CA 95825

BURNED OUT

I have a cathode ray oscilloscope model 670, made by Hickok, and the power transformer has burned out. I would like to be put in touch with someone to wind the power transformer for me, as I cannot obtain one from Hickok. I have the engineering drawing from Hickok with the power windings listed. I would appreciate it if you can help me.

Walter Schivo
560 Eldridge Avenue
Novato CA 94947
415-897-4088

TWO HANDS NOW

The magazine in the new format arrived and the setup looks quite attractive. The only complaint I have would be that it now takes two hands instead of one to hold it up so if one wants to scratch his ear while perusing the periodical, he has to lose his place.

Regarding 2 meter cooperation and band plans and all, in some cases the high officials making the decisions are also high officials in repeaters and there has been some criticism that one will feather his own nest rather than make objective decisions for the benefit of the general public. I note one of the "private repeater" people is on the ARRL Committee.

Paul Schuett WA6CPP/WA7PEI
Wallace CA

WATCH OUT SOUTHERNERS!

I wanted to comment on the Looking West column that Bill Pasternak writes for your thick magazine. I don't know if Bill is a new guy or an old timer in Southern California, but the problems the 2 meter repeater councils in the North and South are having goes way back before repeaters. In fact, it has nothing to do with Ham Radio at all but is purely geographical in nature.

Here is the true problem — it seems that there is a Northern California and a Southern California. And for years the two factions have been fighting over almost everything from politics to tax dollars and water rights. For instance, it appears that when a Governor is elected he usually gets most of his votes by whether he resides in Southern or Northern California — not by whether he is a Democrat or a Republican.

So Bill, don't take it so hard. We Northern Californians have been trying to secede from Southern California for many years. We have all this beautiful country, forests, water, blue skies (smog-free), fairly unpolluted beaches, water, the Golden Gate Bridge, fewer people, water and freeways that actually move at rush hour. And Southern California — well as far as we've been able to determine up here, their biggest assets are smog, people, deserts, and Ronald Reagan the actor.

The Northerners had hoped that the earthquake they had in the South would do the inevitable — make Southern California break off and float out to sea. But since that idea didn't work, tell ya what we're agonna do. Let's go ahead and make it two states like we planned to anyway. Then you guys down there can take Jerry Brown and we'll elect a Northerner for Governor. Or we'll keep Jerry Brown and you folks can elect a new Governor. I heard on the wireless the other day that Richard Nixon is a citizen of your new state. Perhaps him!

Now, you ask, how will we make out financially when Southern California is so rich? That's easy — we sell water to the South and become rich like the sheiks in the Mideast with their oil wells. Watch out Southerners! It gets awful dry down there.

Bill, we can hear you shaking in your boots down there but please don't worry — it sounds great to us. And what of the future of Northern California? Well — today a new state — tomorrow a new country. That way we can ask for foreign aid from the rich Americans. We could also have our own version of the FCC — terrific!

As for working out the problems with repeaters — perhaps you'd like to make an appointment with our ambassador. He will be glad to send you several crates of red tape and forms in 32 parts to fill out. The North shall rise again — but don't worry Bill!!!

Robert Lee Fields
Box 884
El Sobrante
Northern California 94803

RELIABLE SOURCE

Just a note to let *73*'s readers know how pleased I am with one of your advertisers. Dealing with Communications Specialists, manufacturers of the ME-3 miniature PL encoder, has been nothing less than a pleasure. Their products are excellent and delivery is usually less than five days cross-country.

Reliable sources are hard to find. Thanks.

Charles B. Anzman WB2PVH/WR2AIL
Freeport NY

SHOT DOWN AGAIN

In the interest of fair play and downright revenge, I am writing and documenting the below information concerning unethical business practices on the part of one of your former advertisers in the hopes that others will be spared the frustration, mental anguish and expense I have gone through.

On 14 March 1975, I placed an order with Trigger Electronics of River Forest, Illinois for a Drake low pass rf filter. Being a patient person, I waited expectedly until July for my filter. When it did not arrive as expected, I wrote Trigger Electronics and requested to know the disposition of my order and an immediate refund if the merchandise had not already been shipped.

In reply, Trigger stated that the product had been out of stock and that I could expect shipment within two weeks. No mention was made of my desire for a refund, and in fact this was the first indication that my order had even been received in the first place.

When the filter had not arrived by September, some two months after the purported shipment date, I again wrote and demanded an immediate rebate of my purchase price and in turn was advised that I would have to provide additional information so that they might locate the "paper work." I had already provided them with copies of all previous correspondence which remained in my possession.

When I again wrote in October and threatened legal action, I was advised that I could expect them to carry out my wishes once they had completed researching their files. I have heard nothing since then.

I brought this matter to the attention of other local hams in this area via the 2 meter repeater and was appalled at what I heard. Numerous hams in this area have been the recipients of equally poor service by Trigger Electronics, service which is unethical, non-existent, and in my estimation, outright mail fraud. All, other than myself, have resigned themselves to the fact that they have been taken and forfeited their hard earned green, some losing money in the three figure range.

This type of operation must not be allowed to continue and I am sincerely seeking your attention in exposing this shoddy operation to amateurs nationwide via *73 Magazine*.

Raymond E. Ault WA6EVX/KG6
FPO San Francisco CA

ELEVEN METER FREAK?

In response to the recent letter submitted by Scott Liebling WA3OXG of Pittsburg PA, thank you Scott for your letter regarding CBers.

Yes, we are people just like you are! I resent being called an 11 meter freak and the constant nit-picking in the ham magazines concerning "people" who use CB.

I will even give you "hams" the pleasure of seeing in black and white these words from a CBer:

"In my opinion, as many as 85% of the people who key their over modulated D104 mikes belong in juvenile homes."

There once was a time when I too was engaged in chitchat, arguing with the channel "landlord" that I too had a right to use "his" channel, etc.

The time does come, though, after countless letters, calls, etc., to the FCC, that one realizes that it's useless to even bother.

I feel, Scott, that many people now might go the way of the "ham" if they were not to be embarrassed for ever being a CBer.

I recall listening in one evening on a 2 meter FM when a new "ham" was really getting a going over as he was once a CBer. He was being called his former "handle" of "Yogi Bear," etc.

I am no longer active in CB although I still have all my equipment and intend to use it again some day, if things ever straighten out on the CB band.

What I would like to say, though, is something about the good CBers I've known and become involved with.

I've personally seen and been part of thousands of CBers who searched for 8 days under the most horrifying conditions for a lost child, assisted police and fire depts. on Halloween, walking and bike marathons. I've seen CBers donate hundreds of quarts of blood, collect thousands of dollars for a truck driver who was badly hurt, hold benefit coffee breaks for burned out families, dying children, etc.

Assist the Coast Guard with missing boats when people were foolish enough to go too far and depend on a

CB radio, report accidents, render first aid on the scene — and I could go on and on.

Believe me when I say we would love to weed out the bad apples, but there are also some very fine people. Please don't forget them, for they might want to become one of you, if you'll let them.

I'd also like to mention in this letter the Newport County Radio Club to which my son belongs. Bob is now WN1VWN thanks to the fine "hams" who patiently encouraged my son and held his interest by letting him become part of their activities while learning.

A special thanks to Fred Evans W1JFF, for all he's done for Bob, things too numerous to mention.

June Vlasaty KHV-1421
Newport RI

MORE ON ETCHING

I just finished reading the article by John Harrington, "You Can Make Photo PC Boards" (Feb 76). I found it to be a good article. Having also done some work with PC boards, I thought I might offer some of my own findings to supplement the article. When working with the photo sensitizing spray, I found it advisable to do it in a well-ventilated room. Wear one of those sterile masks that painters use to cover their mouths and noses. You can find them in just about any paint or hardware store.

Another type of etchant that I found very nice and neat to use is ammonium persulphate. Sold by Kepro (EPI-G), it comes in a crystalline powder form and is mixed with water when ready to be used. The advantage of this stuff over ferric chloride is that it's clear and not as messy to handle. You can see the progress of the board as it is being etched. It's also fast when heated to the recommended temperature.

If you use the G. C. Electronics sensitizing spray, don't use the Kepro developer. Some thing holds true if you buy the Kepro pre-sensitized board and try to develop it in the G. C. Developer. One way nothing will happen and the other way . . . well . . . it's back to the drawing board or should I say exposure board. In any case, don't mix brands in these two stages. There is no problem which I encountered in the etching stage. Use whatever brand you want.

One more thing: Above all, remember — whatever stuff you use, always read the warnings and the instructions and never lose respect for the chemicals you are using.

Isaac Michalowski WN2ALK
Brooklyn NY

When etching printed circuit boards with ferric chloride, it helps to warm the solution. This will reduce the etching time from about one hour to 15 minutes for small boards. Some use a heat lamp or oven, but these methods generate a lot of heat. If you use a plastic container and don't watch, it could be possible to melt the plastic.

If you have a microwave oven, that works fine. Thirty seconds or less is all that is necessary. No unnecessary heat is generated with this method. I use a glass jar with a plastic lid for small boards. Bigger boards could be done in an open tray.

A note of caution. The ferric chloride fumes might do bad things to the microwave oven so try to use a container that has some type of cover.

Max Holland W4MEA
Madisonville TN

SOME CHRISTMAS

I have bad news. I will be "off the air" temporarily. On Dec. 20, 1975 some PUNKS stole my *entire* communications equipment, and some TV test equipment, out of my garage. Here is the list: 1—Tempo FMH H. T. w/acces.; 1—HR-2 w/touchtone; 1—SX-100 & spkr; 1—Seneca 6&2; 1—Lafayette 6m xcvr; 1—Uticom 2m xcvr; 1—PCL nuvistor amp; 2—6&2m "CW" conv.; 1—swr meter; 1—12V. 4A. DC supply; 1—Sencore MU-150 tube checker/analyzer; 1—Sencore CRT checker/rejuvenator; 2—Tube caddies full of late type TV tubes; 3—Port. B&W TVs.

Loss is estimated at approximately S2,400. Some Christmas.

Anthony E. Bodo WA9YOZ
4380 Hayes St.
Gary IN 46408

KNOW YOUR NEIGHBORS

I recently had the pleasure of attending the first organizational meeting of the new Tri-State Repeater Council. This council, serving Metropolitan New York, New Jersey and Southern Connecticut, has been formed to finish the job that the now-defunct Northeast Repeater Association started. Under the very able direction of Dave Minott WA2EXP (Trustee WR2ACD, NY City), this group is attempting to clean up FM in New York and the surrounding areas and keep it that way. The key to achieving this goal is participation. The first meeting was attended by over one hundred local repeater trustees, an excellent representation, but many were not there. I urge all repeater groups, coordinated or not, to participate in this valiant effort by contacting Dave or one of the directors. The vibrations at the meeting were excellent and I feel that if ALL repeater groups are represented at the coming meetings, the TRC will work. Duke Harrison K2QPF has been retained as area frequency coordinator. Call him if you are planning a machine — it can only benefit you by coordinating.

On the same note, I have a very simple recommendation. If you are a repeater trustee and have other machines on "your" channel or 15 kHz next door, call the trustee of the other machines and say hello. At the Rochester ham convention, I ran into Tom Palmeiri WA2WKP who is trustee of the 175-775 repeater in White Plains NY. As trustee of WR2AIL here on Long Island (also 775) I made an immediate effort to say hello to Tom and develop a neighbor relationship. Now that both repeaters are COR, 24 hours a day, and constantly expanding coverage, Tom and I have avoided many problems by calling each other once in a while and letting each other know what's happening on the other end. In the near future we plan to link the two machines duplex via UHF and many other cooperative efforts are in the works. The moral is: Get to know your frequency neighbors — it couldn't hurt!

Keep up the good work reflecting FM activities in *73*. Love the new format.

Charlie Anzman WB2PVH/WA2AAB
President South Is. Rptr. Soc.
Freeport NY

ONLY LINK

Congratulations on doing it again!! Every time I think I have the "ultimate" in a two meter station, you publish another article which forces me to dig out the tools and commence to mess up the room, much to the chagrin of my long suffering first Sergeant.

At present, I am referring to the article by WA8LEM in the September issue on page 137, entitled "Adapting Telephone Handsets to FM Transceivers."

This is very easy to accomplish on the ITC Multi-2000 transceiver. A careful study of the tiny schematic revealed that pins 1 and 4 on the microphone plug are connected to ground. All that was necessary was to remove all connections from one of these pins (I used pin 1), and reconnect them to either the other pin or direct to ground. A single wire was then run from the external speaker jack on the rear panel to the vacant pin. I elected to use a hook-up which gave audio to the handset at all times, regardless of whether an external speaker was used or not.

I went the whole route with this modification and built a complete "remote" audio system in an old telephone case. If you know of anyone who might be interested, I will be more than happy to pass along the schematics and such on the external system. It definitely makes for more convenient operation and is quieter. The latter is an important item with me as I live in a barracks.

I would also like to correspond with other Multi-2000 owners and exchange ideas and problems. At present, I have a small (2 kHz) problem with my VXO. A frequency meter indicates that the output frequency is 2 kHz lower than the VXO knob indicates. I am also in need of another copy of the schematic to convert the 2000 to selectable sideband. The copy I had was misplaced (lost) in a big room shuffle in the barracks.

Many thanks for your help, both past and present, and keep up the good work with the magazine. It is about my only link with the fast changing hobby up here on this remote site.

Carl Hattan KØBZV/KL7
1931-07 Comm Det Box 75
APO Seattle 98711

DESIROUS

I am in definite desire to repair a Hallicrafters Receiver, Model S-40B, into working condition for monitoring both amateur and broadcast (HF) traffic. I have a copy of the schematic and an idea where the alteration was made by the previous owner. I am very desirous to have this unit back in condition in as short a time as possible.

I am also in the process of attempting to obtain a General Class Ticket!!

Ralph Brigham
405 Oxford Drive S.E.
Huntsville AL 35802
(205)-881-8400
after 4:00 pm

DIGITALITIS

Let's keep up the technical articles and "build it" articles in *73*.

With the new (UGH) size I expect to see PC board layouts!

I use a Mamiya 500 DTL with Litho film to copy the layout and then enlarge it onto 5x7 Litho film — does a good job with G-C photo resist spray.

I have contracted "Digitalitis" from your rags.

Mel Hart WØIBZ
St. Louis MO

WANTED: K6DGX

A lot has happened since you published my letter in the November/December issue.

On 24 December I passed the Advanced Class test, and now I'm anxiously undergoing the weeks-long wait for my ticket.

I found the *73* code tapes very helpful in preparing for the test. I'd like to pass along a hint for others — I started with the 6 wpm tape, since I already knew the code, having once had a Technician license. When I was copying the tape pretty well, I wondered how to get over the hump

Continued on page 112

CONTESTS

Editor:
Robert Baker WA1SCX
34 White Pine Drive
Littleton MA 01460

SAN JOSE BICENTENNIAL AWARD

The Santa Clara County Amateur Radio Association (SCCARA) is offering a special Bicentennial Award to celebrate the bicentennial of San Jose CA. The award is earned by working a number of SCCARA members, and stations located in San Jose, Santa Clara County, or the Pacific Division for a total of 200 points. The points are based on the location of the station requesting the award. A minimum number of SCCARA members must be included. Also, *one* contact with either of the club stations W6UW or W6UU may be counted for special point value. Contacts may be made on any mode, on any band, but each station can be counted only once regardless of bands or modes used. No credit will be allowed for contacts made via repeaters, except that OSCAR contacts will be counted. An endorsement for all phone or all CW contacts will be available if requested (and log data verifies). Contacts to be counted must be made between July 1, 1976 and December 31, 1977. To request the award, send log data (call of station worked, date, time, mode and handle of operator) along with $1.00 US or 5 IRCs (latest type only!) to the Club Secretary, SCCARA, PO Box 6, San Jose CA 95103.

The following table indicates QSO point values and minimum number of SCCARA members that must be included (only one contact with W6UU or W6UW is allowed, not both!):

	W/in SC Cnty	W/in 6th Dist. (Not SC Cnty)	W/out 6th Dist.
Min # SCCARA members	10	5	2
Pts/SCCARA member QSO	5	10	25
Pts for Club Stat QSO (only 1)	10	20	50
Pts for other SC County Contacts (not SCCARA members)	1	2	2
Pts for contacts w/Pac. Div. (not SC County)	–	–	1

WHEAT CITY AWARD

This award is sponsored by the City of Brandon and the Brandon Amateur Radio Club and is offered free of charge. To receive the award, work three amateur radio stations in the City of Brandon, Manitoba, Canada if you live outside of Canada. Those living inside Canada must work five stations in the City of Brandon. All contacts must be made after January 1, 1967. Send log data only to: Mr. Doug Bowles VE4QZ, 1104 First Street, Brandon, Manitoba, Canada R7A 2Y4.

The following two awards are sponsored by the Nortown Amateur Radio Club, VE3NAR, PO Box 356, Adelaide Street Postal Station, Toronto, Ontario, Canada. A sworn affidavit certified by a President or Vice President of a legitimate Amateur Radio organization may be submitted in lieu of QSL cards.

WAVE AWARD
WORKED ALL VE AWARD

Contact two different stations on two different bands in each of the following 8 sections: Prince Edward Island or Nova Scotia or New Brunswick (VE1), Quebec (VE2), Ontario (VE3), Manitoba (VE4), Saskatchewan (VE5), Alberta (VE6), British Columbia (VE7), and Northwest Territories (VE8). All contacts must be made from an area within a radius of 150 miles of one point and after January 1, 1939. Submit the 16 OSL cards (or sworn affidavit) with $1.00 or 10 IRCs. All cards will be returned. Return postage must accompany all submissions.

WACAN AWARD
WORKED ALL CANADA AWARD

Contact two different stations on two different bands in each of the following 12 sections: Prince Edward Island (VE1), Nova Scotia (VE1), New Brunswick (VE1), Quebec (VE2), Ontario (VE3), Manitoba (VE4), Saskatchewan (VE5), Alberta (VE6), British Columbia (VE7), Yukon or Northwest Territories (VE8), Labrador (VO2), and Newfoundland (VO1). All contacts must be made from an area within a radius of 150 miles of one point and after January 1, 1939. VO contacts must be made after March 31, 1949. Submit the 24 OSL cards with $2.00 or 20 IRCs and return postage for QSLs. All cards will be returned. Cards submitted for WACAN can be automatically applied towards the WAVE award – please indicate if desired. For holders of the WAVE Award, submit the QSL cards for the remaining four sections (8 QSLs) with $1.00 or 10 IRCs and return postage.

FLORIDA QSO PARTY
1500 to 2000 GMT
Saturday, April 17
0000 to 0500 GMT
Sunday, April 18
1400 to 2400 GMT
Sunday, April 18

The 11th annual QSO Party is sponsored by Florida Skip. Phone and CW are counted as separate contests. The same station may be worked on each band for QSO points and Florida stations may work other Florida stations for QSO points only.

EXCHANGE:

RS(T) and QTH; QTH = county for Florida stations, = state, province, or country for others.

SCORING:

Florida stations count 1 point per QSO. Multiplier is sum of states (49 max), provinces (12 max), and DX countries (12 max). Maximum multiplier is 73. Florida mobiles and portables operating on emergency power and running 200 Watts or less, multiply total score by 2. Out of state stations score 2 points for each Florida portable or mobile station worked and one point for each fixed

CALENDAR

Mar 27 - 28*	Tennessee QSO Party
Mar 27 - 28*	CQ Worldwide WPX Contest – SSB
Mar 27 - 29*	BARTG Spring RTTY Contest
Apr 17 - 18	Florida QSO Party
Apr 3 - 4	Open CD Party – CW
Apr 3 - 4	SP DX Contest – CW
Apr 10 - 11	Open CD Party – Phone
Apr 10 - 11	County Hunters SSB Contest
Apr 24 - 25	PACC
Apr 24 - 25	Delta QSO Party
Apr 24 - 25	BARC Contest – Phone
May 1 - 2	Massachusetts Bicentennial QSO Party
May 1 - 2	Helvetia 22 Contest (H22)
May 8 - 10	Georgia QSO Party
May 8 - 10	Vermont QSO Party
May 8 - 9	BARC Contest – CW
May 15	World Telecommunication Day Contest – Phone
May 22	World Telecommunication Day Contest – CW
June 4 - 7	IARS/CHC/FHC/HTH QSO Party
June 12 - 13	ARRL VHF QSO Party
July 3 - 4	QRP – Summer – Contest
July 3	ARRL Straight Key Night
July 24 - 25	ARRL Bicentennial Celebration
Aug 14 - 15	European DX Contest – CW
Sept 4 - 5	ARRL VHF QSO Party
Sept 11 - 12	European DX Contest – Phone
Oct 8 - 10	CD Party – Phone
Oct 16 - 18	CD Party – CW
Oct 30 - 31	CQ Worldwide DX Contest – Phone
Nov 5 - 8	IARS/CHC/FHC/HTH QSO Party
Nov 6 - 8	ARRL Sweepstakes – CW
Nov 13 - 14	European DX Contest – RTTY
Nov 14	OK DX Contest
Nov 20 - 22	ARRL Sweepstakes – Phone
Nov 27 - 28	CQ Worldwide DX Contest – CW
Dec 4 - 5	ARRL 160 Meter Contest
Dec 11 - 12	ARRL 10 Meter Contest
Dec 31	ARRL Straight Key Night

* = described in last issue

station. Multiplier is number of different Florida counties worked (max 67). Final score is total QSO points times multiplier.

FREQUENCIES:

CW – 1807, 3570, 7070, 14070, 21070, 28070.

Phone – 1817, 3970, 7270, 14317, 21370, 28570.

ENTRIES:

A summary sheet is requested showing the scoring and other pertinent information. Also, your name and address in BLOCK LETTERS, and a signed declaration that all rules and regulations have been observed. Include a 13¢ stamp for results in a future issue of Florida Skip. Mailing deadline is April 30th but late DX entries will be accepted within reason. Send all entries to: Florida Skip Contest Committee, P.O. Box 501, Miami Springs FL 33166.

AWARDS:

Certificates will be awarded to the top single operator score in each state, province and DX country as well as each Florida county for both phone and CW. There are also 5 plaques to be awarded for: High single operator in Florida and out-of-state both phone and CW (4 plaques), and to the Florida club with the highest aggregate score.

At the discretion of the contest committee, stations may be disqualified for improper reporting, excessive dupes, errors in multiplier lists, unreadable logs, obvious cheating, etc. Anyone disqualified in this year's Florida QSO Party will be barred from the contest next year.

SP DX CONTEST – CW

Starts: 1500 GMT
Saturday, April 3
Ends: 2400 GMT
Sunday, April 4

Work as many SP stations during the contest period as possible on all bands 3.5 to 28 MHz. The three categories are: single operator, single and all band; multi-operator, all band only; and SWL. The same station may be worked on each band for QSO points but a powiat may be counted only once as a multiplier. All contacts must be on CW only.

EXCHANGE:

RST plus a 3 figure QSO number starting with 001 for foreign stations. Polish stations will send RST and their powiat letters.

SCORING:

Each QSO with an SP station counts 3 points. Final score is total QSO points times the total number of different powiats worked regardless of bands.

AWARDS:

Certificates to the top scorers in each category, in each continent and each country and call area of Australia, Canada, USA and USSR.

ENTRIES:

Use a separate log sheet for each band and include a summary sheet with all the scoring information. The usual signed declaration is also requested. Usual disqualification rules will apply. Entries should be postmarked no later than April 30th to PZK Contest Committee, P.O. Box 320, Warsaw, Poland.

SIX METER GROUND WAVE CONTEST

Starts: 0300 GMT
Sunday, April 4
Ends: 0700 GMT
Sunday, April 4

The contest is sponsored by the Society For The Preservation and Encouragement of Six Meters and Global Research. It is open to all amateurs, worldwide – on all modes: SSB, CW, FM, AM, SSTV, RTTY, and FAX. Any six meter contact is valid. Skip stations do count in the event the band is open, but they only count ½ point each no matter where the station is located.

SCORING:

For scoring purposes, there are four zones defined by the distance between your QTH and the station contacted. Zone definitions and QSO points for contacts with each zone are as follows: Zone 1, Stations within 25 miles of your QTH – 1 point/QSO; Zone 2, Stations 25 to 50 miles from your QTH – 2 points/QSO; Zone 3, Stations 50 to 75 miles from your QTH – 3 points/QSO; Zone 4, Stations over 75 miles from your QTH – 4 points/QSO.

LOGS:

Show your name, call, address, ARRL section, and input power. Mobiles and portables must show actual locations. For each station worked, show: call, ARRL section, zone (as defined above), time, and points scored. Show your total score, sign the log, and submit to: Phil Caruso K9DTB, c/o Global Research, Contest Chairman, PO Box 271, Lombard IL 60148. Logs must be postmarked by May 3, 1976 for scoring on May 31, 1976. Incomplete logs will not be eligible for awards.

AWARDS:

All entries will receive a certificate from SPESM. The first place total score in each category will receive a prize. Prize categories are as follows: Mobile – any mode or power; Portable – any mode or power; High power – 100 Watts or more; Medium power – 51 Watts to 99 Watts; Low power – 50 Watts or less.

Any questions concerning rules can be answered by K9DTB (Phil) at 312-279-4658 or through SPESM. All prizes are donated by Global Research.

NOVICE QSO PARTY

Starts: 0000 GMT
Saturday, April 10
Ends: 0600 GMT
Sunday, April 11

The fifth annual Novice QSO Party is sponsored by the International Novice Amateur Radio Assoc. Any class amateurs work only Novices and work each station only once regardless of bands. Please use "CQ NP" for contest call and use the lower 10 kHz of each Novice band. The following are considered as Novices: EL#Nx, HC#Nxx, HI#Nxx, KG4Nxx, KZ5xxN, LB#xx, OA#Nxx, OL#xxx, VU2xxx, WH6xxx, WL7xxx, WN#xxx and WP4xxx (or bicentennial equiv.).

EXCHANGE:

RST and name.

SCORING:

Novices multiply total number of QSOs by total number of different prefixes worked (K1xxx & WA1xxx are different prefixes, etc.). Non-Novices multiply total number of contacts by the number of different Novice prefixes worked (WN4, WN8, OA3N, OA2N, etc.).

ENTRIES:

To qualify for awards, mail logs no later than May 1st to: Andi Anderson WB5MYV, Route 1 Box 193, Heavener OK 74937. Include an SASE for results.

COUNTY HUNTERS SSB CONTEST

Starts: 0001 GMT
Saturday, April 10
Ends: 2400 GMT
Sunday, April 11

The fifth annual County Hunters SSB Contest is sponsored by the Mobile Amateur Radio Awards Club, Inc. (MARAC). Basically, the rules are as follows: Mobile stations may be worked each time they change

Continued on page 32

RESULTS

RESULTS OF THE 1975 DELTA QSO PARTY

Plaque winners are as follows: high score, Delta Division – W5DRW; high score outside division – KØGJD/6; high score, portable station – WB4DJU/4; high score, mobile station – WA5KQD/5. Only WA3VWJ/5, W4CHK and KØGJD/6 worked five stations in each of the four states in the Delta Division for the Delta Achievement Award. Results of a contest survey are available, for a large SASE and two first class stamps, from W5RUB. The first place station in each section is as follows:

DELTA DIV.	CALL	# QSOs	SECTIONS	POINTS
ARK	W5DRW (WA5RTG op)	324	62	20,088
LA	W5WG	299	60	17,940
MISS	W5RUB/5*	584	55	32,120
	K4EOH/5	210	47	9,870
TENN	WB4RJF	232	47	10,904

* = not eligible for plaque

SECTION	CALL	# QSOs	COUNTIES	POINTS
CONN	WA1KMP	29	25	725
E. MASS	W1AQE	71	45	3,195
NH	WB6IPR/1	13	11	143
VT	K1IIK	5	5	25
ENY	W2WSS	30	19	570
NLI	W2RPZ	77	42	3,234
NNJ	WA2DFC	40	24	960
WNY	W2NCI	73	40	2,920
EPA	W3EFY	19	15	285
MD	W3RAB	76	40	3,040
WPA	W3HDH	16	13	208
GA	WB4QGN	72	39	2,808
KY	W4KFB	47	25	1,175
NC	W4OMW	32	21	672
NFLA	K4DDB	34	20	680
SC	K4HQU	46	29	1,334
SFLA	K4HWW	86	35	3,010
VA	W4CHK	113	59	6,667
NTEX	W5SOD	40	23	920
STEX	WA3VWJ/5	74	39	2,886
LA	WAØKXJ/6	12	12	144
ORG	KØGJD/6	124	57	7,068
SBAR	K6QPH	5	5	25
SJV	K6TG	13	9	117
ARIZ	WB7BQN	9	9	81
IDAHO	W7GHT	44	29	1,276
ORE	WA7GOO	22	17	374
MICH	W8WVU	50	29	1,450
OHIO	W8RYP	7	7	49
WVA	K8LOU	10	9	90
ILL	W9VEN	50	28	1,400
COLO	KØQIX	59	33	1,947
MO	WBØNOU	8	7	56
NDAK	KØITP	3	3	9
CANADA				
MAR	VE1AHG	16	15	240
ONT	VE3EJK	65	36	2,340

by
Jim Huffman WA7SCB
P.O. Box 357
Provo UT 84601

Yes, You Can Build This 2m Receiver!

Chances are no one has to tell you how great it is up on "2." You may already have at least one rig on two, or wish you had one. Either you or some of your ham buddies may operate the local repeater(s) and maybe your club even has a repeater. If, however, by some strange uncanny phenomenon, you don't know how good it is on two meters, you'd better build yourself this receiver. If you're like most hams and already have a handle on two meters, build this unit and you can have a good back up receiver, monitor your calling repeater (no matter which one you're working), or spend a few extra dollars to add a transmitter for a dandy economical little FM rig.

For somewhere in the 35 dollar range you can receive two meter signals in the fraction of a microvolt range, run off a handful of batteries, the house current, or the auto battery, and know what's happening on two.

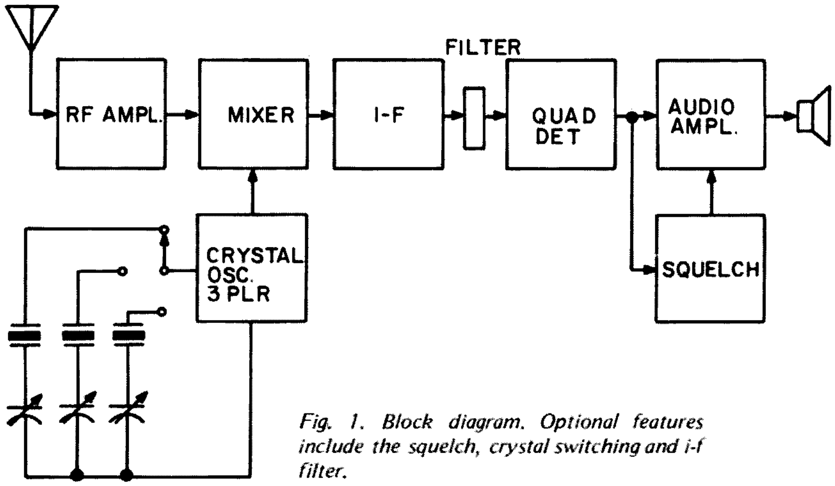

Fig. 1. Block diagram. Optional features include the squelch, crystal switching and i-f filter.

A simple, inexpensive transmitter is on the drawing board as a companion for the thing and there is plenty of room for it in the cabinet. If your junk box is full to the brim, you can probably build this unit for the cost of some of the ICs and the circuit board, etc.

The whole receiver was designed with an eye to the cost vs. performance ratio. You get the best performance possible at the lowest cost. You can leave out some of the circuits if your budget is a little strained. Sort of a "put the squelch on layaway" program. The circuit design uses the right combination of ICs and discrete circuits to give good performance and still save on the cost of the unit. Also, consideration was given to the overall circuit-by-circuit cost; that means you don't pay only a quarter for an IC (bargain, huh?) and then have to add $5.00 worth of external components to make it work. You get the best choice as far as the combination of the IC cost and external components.

Fig. 1 shows the block diagram of the receiver. The receiver is a simple, single conversion unit with no frills. As mentioned before, you can add the frills later. For instance, there is no fancy ten-pole crystal filter in the i-f, but there is enough room on the circuit board to add it for those who need it. After all, why should those of us who have only one or two repeaters in the area, on widely separated frequencies at that, pay for that added selectivity? If the action gets too hot up there later, we can add the circuit. It is a lot easier for the poor amateur to liberate ten dollars here and there than to spend 50-60 bucks a whack.

Fig. 1 shows that the incoming signals are converted to a 10.7 MHz i-f. The front end is FET and the i-f amp is an IC. The quadrature detector is also an IC. The IC audio amplifier is protected so you can disconnect it with the audio going full blast. This allows you to use a variety of speakers, headphones, etc., without worrying whether gross impedance mismatches will ruin the receiver. The squelch is treated as an option, although there are those who feel a receiver without squelch is unthinkable. It is a little noisy up there on two, so the squelch is a good one. It will operate external buzzers, relays and lights, as well as switching the audio. You can operate a buzzer with a telephone handset operation to impress the boys in the carpool, or to soothe the XYL who can't stand to hear the squelch breaking. You have a Watt or two of audio which will work fine for all but the noisiest sports cars. The entire receiver draws about 100 mA. That amount won't run your nicads down for a few hours,

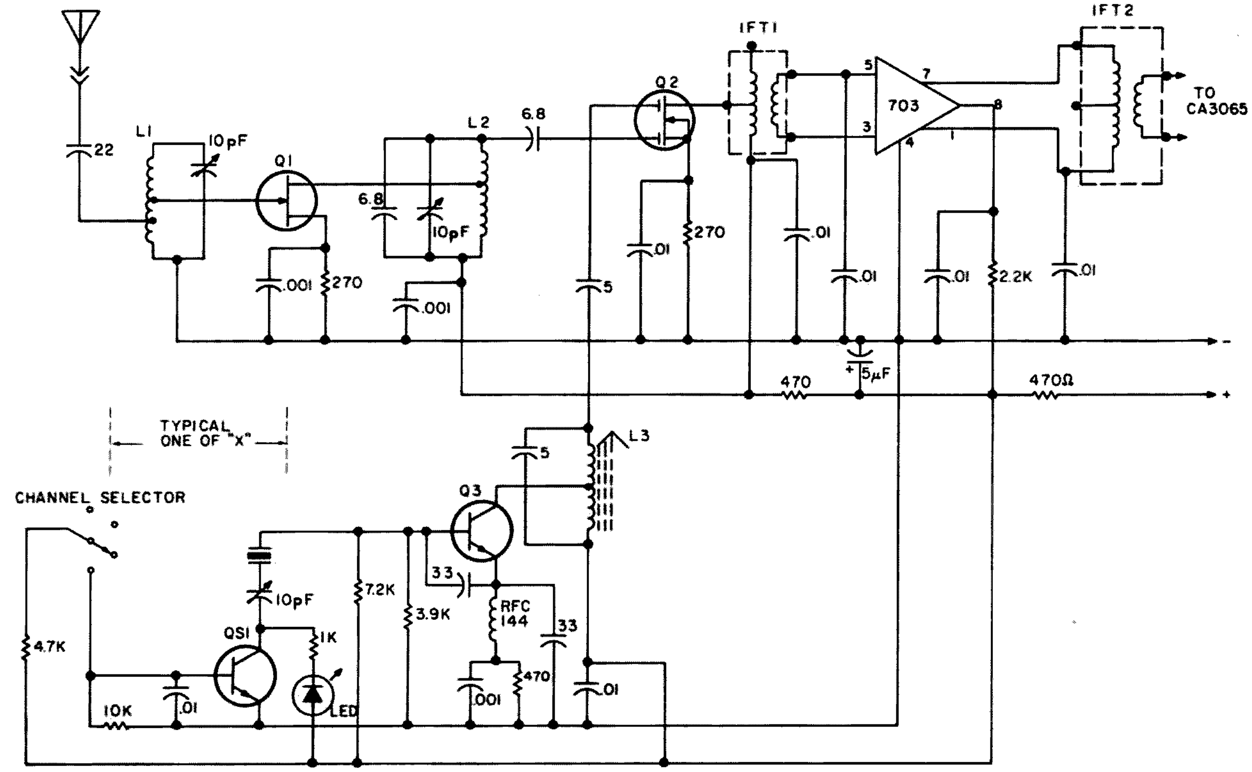

Fig. 2. Schematic diagram (continued on next page). Optional channel selector is shown. Q1: GE FET 2, F0021, MPF102, 3N128. Q2: 40673, 3N140*. Q3: 2N2222. Q1-X: 2N2222*. L1: 7T #18 3/8"d 5/8"l, tapped 1T and 2T from cold end. L2: 5T #18 3/8"d 7/16"l C.T. L3: 5T #18 ¼" cerform, tapped 1¼T from cold end. *See text.*

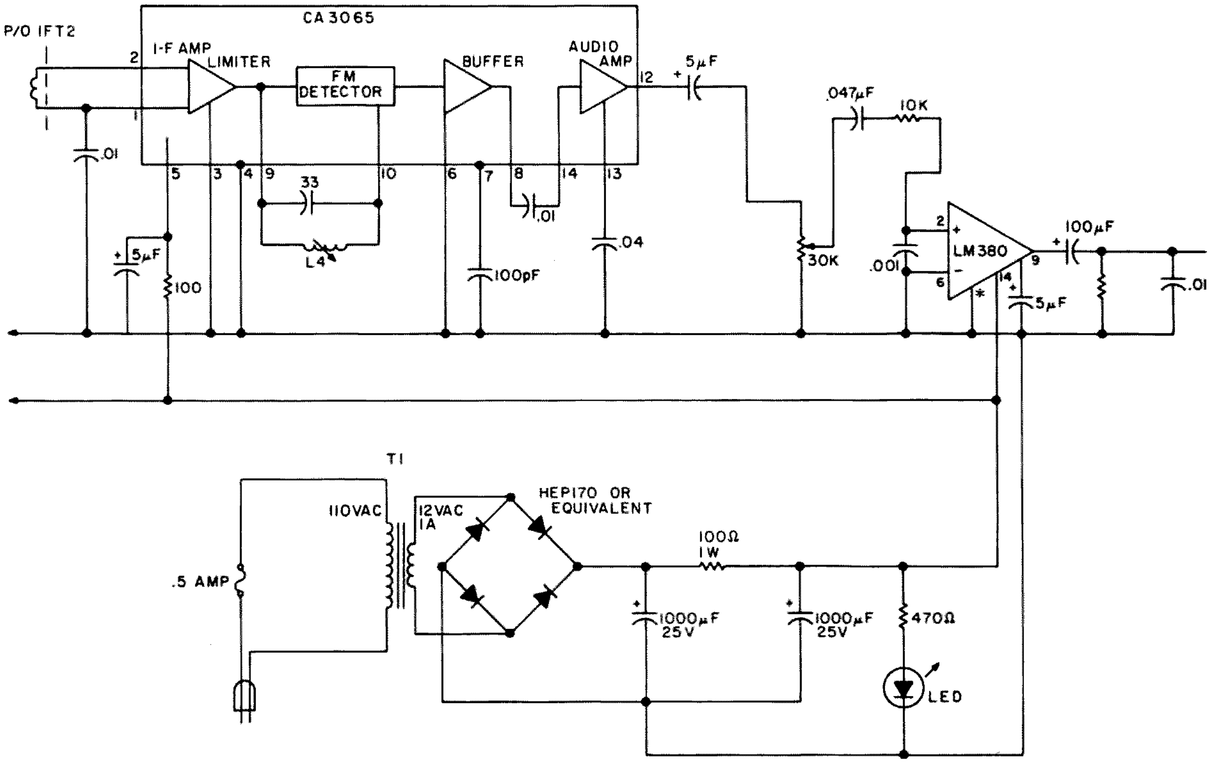

Fig. 2. (continued).

and you'll never notice the new addition to the electric bill.

A look at the schematic, Fig. 2, shows that the oscillator and tripler circuit are one and the same. This circuit uses crystals which triple in the same way the Regency folks do in the HR-2 (or so I'm told). That means you can order your crystals from the inexpensive units that advertise in 73 all the time offering their crystals for particular units, to that unit's specs. To find the crystal frequency, subtract 10.7 from the repeater or other desired frequency in MHz, then divide by three. For a 146.94 unit, the frequency is 136.26 and the crystal frequency is 45.42 MHz. I have had a lot of success with Jan Crystals units selling for $4.00 each; just order for the series mode.

The dual gate mixer and JFET front end provide good overload immunity and help guard against cross-modulation effects. If you find the agc-less receiver suffering from overload in your application, just add the rf gain control shown in Fig. 5.

The i-f stage uses the familiar 703 op amp. Although I have read reports of people having bad luck with the op amps, I find them extremely stable when treated right. Just keep the leads short and bypass close to the case. You won't have any trouble at all.

The limiter, detector, and audio preamp stages are part of an IC that is unique in that its original application was in the 4.5 MHz audio i-f of TVs. If that scares you, you are welcome to the popular CA3089 IC. The 3089 has built-in squelch, but the cost is nearly 4 dollars as compared to less than 75¢ for the CA3065 used here. The squelch circuit can be added for around a buck and a half or less and is far more versatile than the squelch in the CA3089. The CA3065 uses few external components in this application and will do the job well. Ignore the spec sheet that may come with the unit, unless you

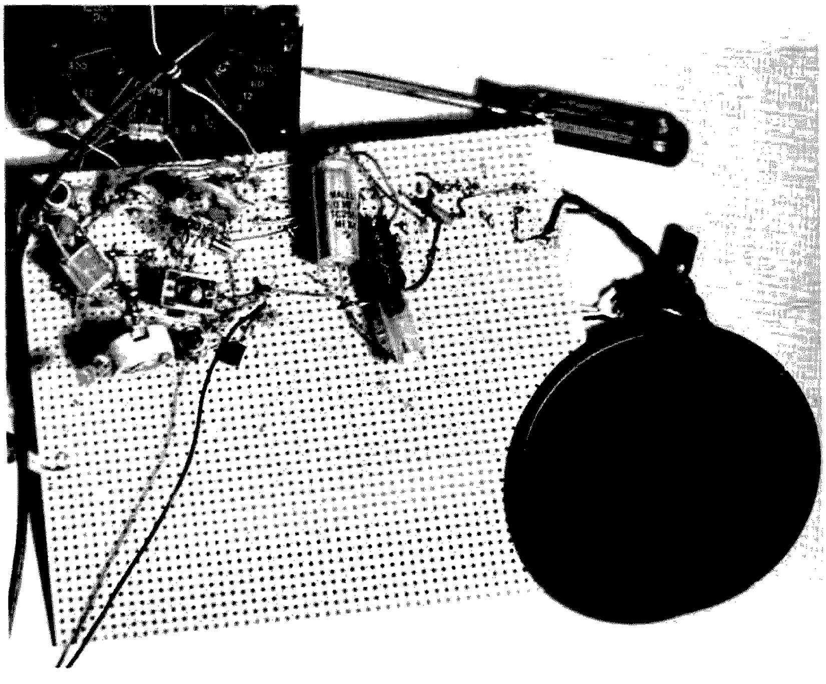

Fig. 3. This is the prototype layout. If this thing worked (and it did, very well) just about anything you can dream up should work with no problem. See the text for pointers on some pitfalls in laying out the receiver.

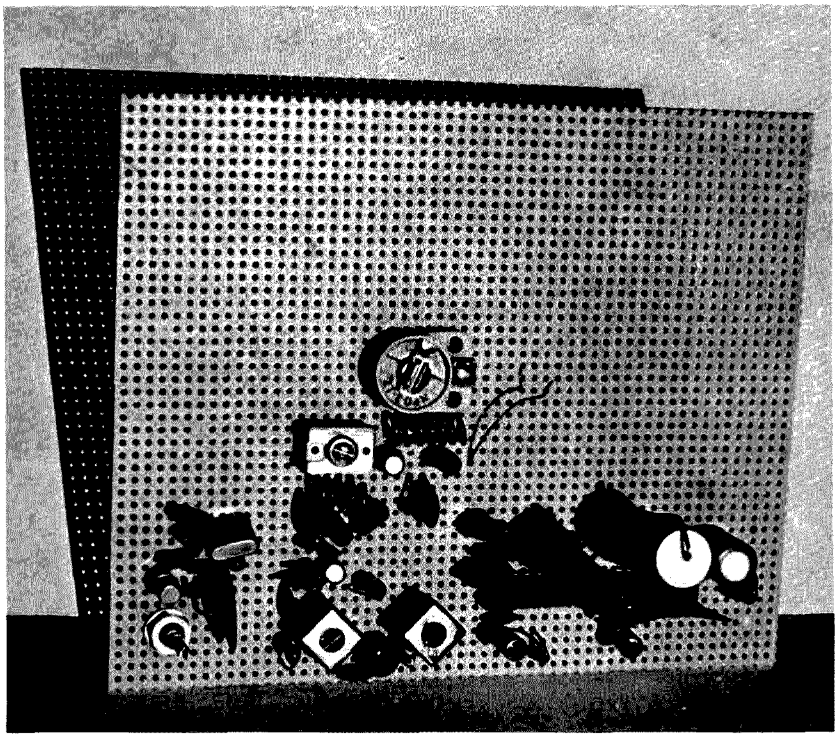

Fig. 4. This is the final layout of the breadboarded receiver circuit. Stick with this one, and you'll have room enough for add ons, and a stable receiver design.

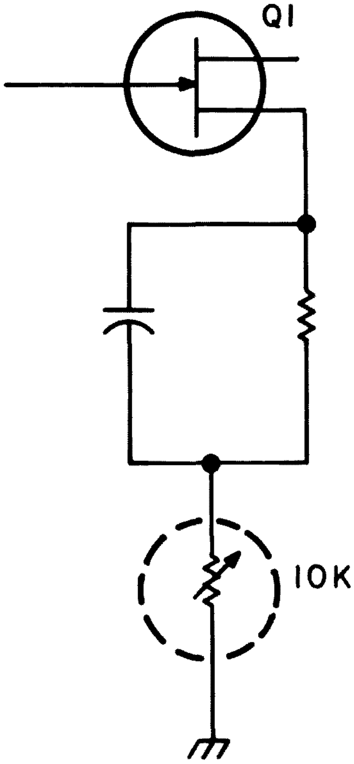

Fig. 5. Installing a 10k rf gain control in Q1 emitter when overload is a problem. When using the unit as a fixed station, it may be a trimpot "set and forget" control. Adjust for maximum gain/minimum cross modulation.

want to do a lot of experimenting. The values given work nicely.

The audio output stage uses the LM380 IC. The 380 puts out better than a Watt with a 12 volt supply and will be adequate for most applications. The best features of the IC are its very low cost ($1.60) and the few external components it requires. The gain is fixed at a maximum limit like the 703 op amp and this gives it a lot of stability as long as good layout is used.

Construction

You can use just about any layout you want. If you use my layout, you will likely have better results right away since mine is proven. You certainly should try your own if you have something in mind as the simplicity of this receiver makes it a candidate for miniaturization. If you do try another layout just try to keep inputs and outputs that are at or near the same frequency separated, shielded, or both. Note, in the PC diagram, how the ground bus is used to provide shielding between stages. The i-f system in this unit has very high gain; the CA3065 was designed to be the sole i-f amplifier in a TV system, so the addition of the 703 op amp can bring the system gain as high as 90 dB. That is pretty hard to keep stable without keeping the inputs and outputs well apart.

Just look at Fig. 3. This was the prototype circuit board while the developmental work was being done. If that worked, just about anything you dream up should suffice. Fig. 4 is a photo of the final layout. The receiver is shown as a prototype layout and there is room for the squelch circuit (layout not shown), crystal switching, even for a transmitter. You'll be reading about the add ons to this receiver later; in fact, you may even have something unique in mind for your own. If you use the same cabinet I did, there will be plenty of room for adding a power supply and the speaker mounts easily in the unit.

Substitutions

Any good ham is interested in using junk box parts in building anything, but sometimes the junk box is not full of the values the schematic calls for. For starters, you can save some money by getting the three MOSFET pack from your local Radio Shack for less than $1.50. Use two in the receiver and add one to the junk box. The gates aren't protected, but I have more static in my carpet than rf in my transmitter, and using just reasonable caution and discharging myself before handling them, I have not burned out a single gate. The 3N128 single gate makes a good front end. The 3N140 makes a dandy mixer. You can substitute paper coil forms for the ceramic forms. Better choices are the resinite forms, those brittle plastic looking things you've seen around. You probably noticed that the crystal switching circuit is strange. If you want to leave out the Q5 stages and just use the switch, just remember to use a layout like mine that puts the oscillator near the front of the case, so the switch leads will be shorter. Just ground the lug of the crystal tuning capacitor rather than connect it to the collector of Q5. The Q5 stages are not given in the PC layout.

In the i-f stages, you may steal the i-f transformers from a transistor radio (1) if it had FM and (2) if you can identify the 10.7 MHz transformers from the 455 kHz transformers in the case of an AM/FM. Use the mixer transformer from the radio as the mixer transformer in the receiver and use the radio's i-f T2 as i-f T2 in the receiver. For saving another quarter, use the bipolar transistor (if it's NPN) from the radio for the local oscillator. Be sure to use either the front end or the oscillator/mixer transistor as Q3. Oh yes, while you're cannibalizing, you may as well use the radio's volume control and/or tone control for the volume and squelch controls. Check the values to insure they are 50k or lower.

The true parts substitution nut will love this last one. Don't even use coil forms or trimmer capacitors. The heavy coil windings can be wound so that a ferrite core from a coil form (the threaded interior type) will fit inside along with a little tape or plastic sheet to insulate the thing. The slug will move in and out of the coil when you turn it since the pitch of the windings acts like threads in the coil form. You no longer need trimmer capacitors because the coil is slug-tuned. Naturally, since the inductance increases you will need to find a value for the fixed

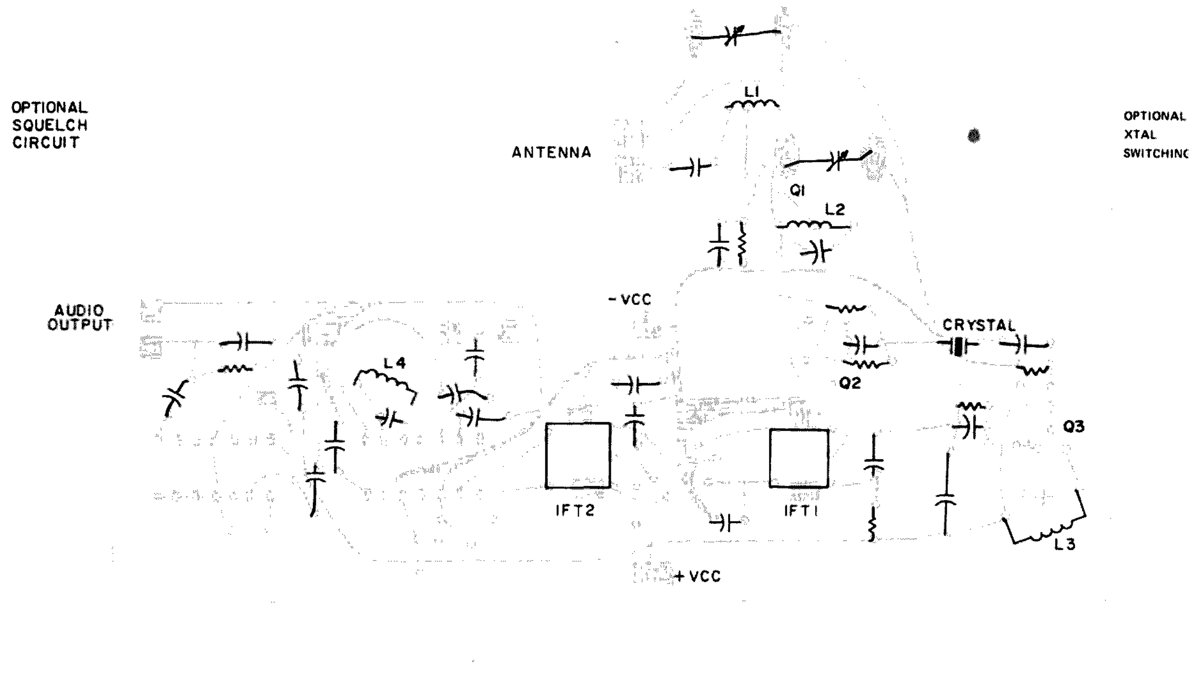

Fig. 6. Foil side PC layout. Note open areas for squelch and crystal switching, as well as crystal filter.

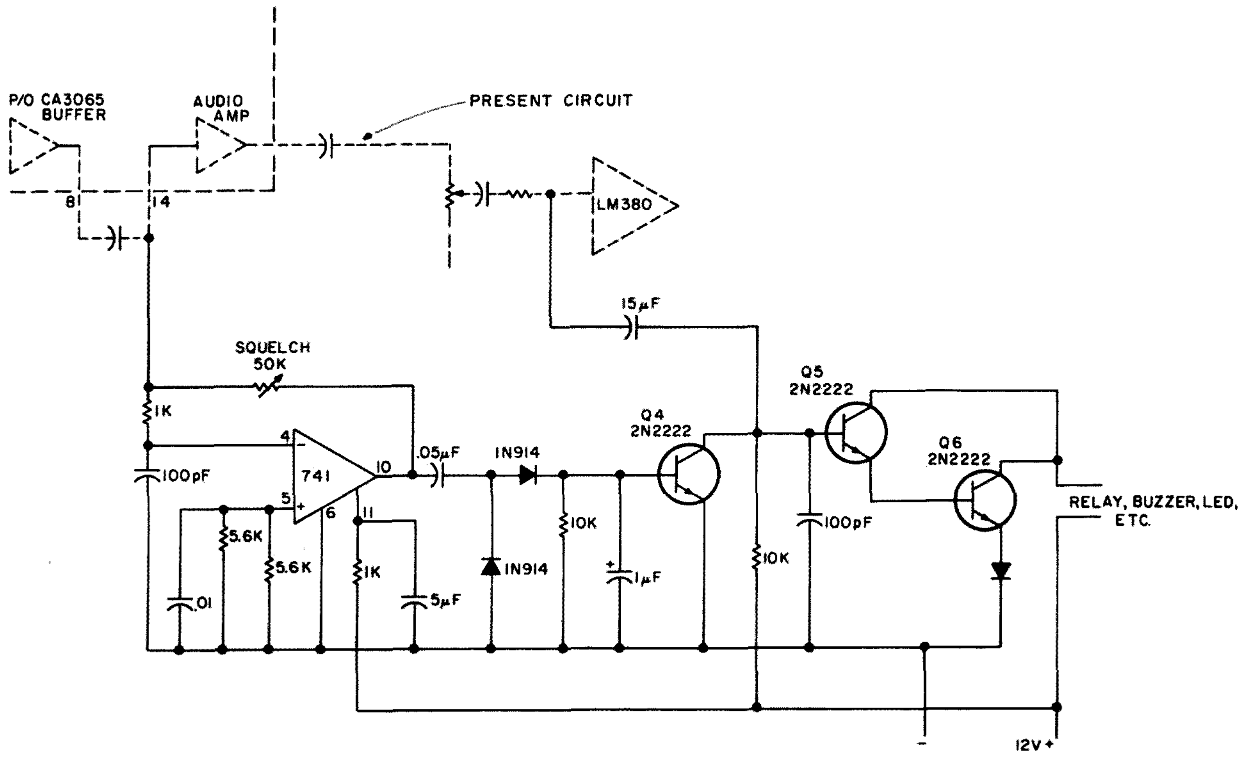

Fig. 7. Squelch circuit. Q5 and Q6 are an option to the option. They will operate a buzzer, or whatever. You will probably want to add a switch to the audible signal so it can be cut when you are in QSO.

capacitor experimentally. A grid dip meter should suffice. Don't worry too much about hurting circuit Q because the FETs don't care, and the Q in the oscillator circuit is not that critical to proper operation. You will still have to use a form for the quad detector coil since it is a relatively high-inductance unit.

Optional Circuits

While you may not consider some of the optional circuits optional, they really aren't basic to the functioning of the receiver and can be added later if you don't wish to do so now. Fig. 7 shows the squelch circuit. The optional crystal switching is part of the main schematic, Fig. 2. The crystal filter circuit is shown in Fig. 8, and the PT12194F Piezo Technology Comline filter should do the trick. You can find a slew of preamplifier circuits if you feel the need to add one to the front end. And diode protection, back to back 1N914s across the input rf amp gate, is recommended when using the receiver with a companion transmitter. This protection may not be necessary, but can't hurt since it will cost only a quarter more and might save the front end from damage from the nearby rf.

Tuneup

Accomplishing tuneup is easy. First align the i-f, then the rf stages. With an input from a signal generator or grid dipper align the quad detector for minimum noise output. Keep switching the rf on and off so you make sure you have noise without signal, no noise with; that way you don't accidentally detune the thing way off frequency thinking you're right on. Next peak the i-fs for minimum noise. Tune up the front end by giving it a signal on two meters, a gdm is fine, and again tune the front end for maximum quieting. Tweak the oscillator for maximum quieting. Then accomplish final tuneup with weak signals on the band when possible. For a sensitivity check without 2 meter signals use the gdm. You should be able to quiet the receiver from as far away from a 19 inch whip or piece of wire as you can your communications receiver. If you have a two meter FM receiver already, you can use its sensitivity as a reference. If all is well with your wiring you can stir up some action on the band.

You should enjoy this receiver. The satisfaction of knowing you built it yourself, as well as knowing how much money you saved over available commercial units should make it a fun experience. The money you save building this unit and a companion transmitter could buy the XYL a nice gift. And then maybe she'll even start encouraging this nutty hobby of yours. Of course, you can also use the left over money to buy yourself another piece of ham gear, or since you've got it sitting around, perhaps you'd consider using it to make up the difference in this week's and last week's grocery bills. ■

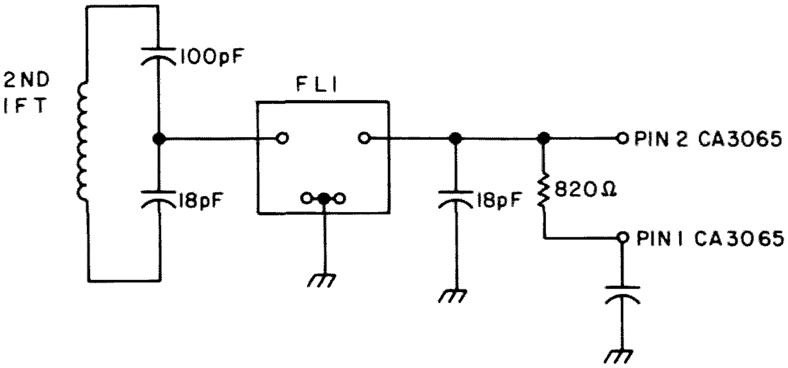

Fig. 8. Crystal filter circuit. FL1 is a PI12194F crystal filter or equivalent.

A Reprogrammable ID

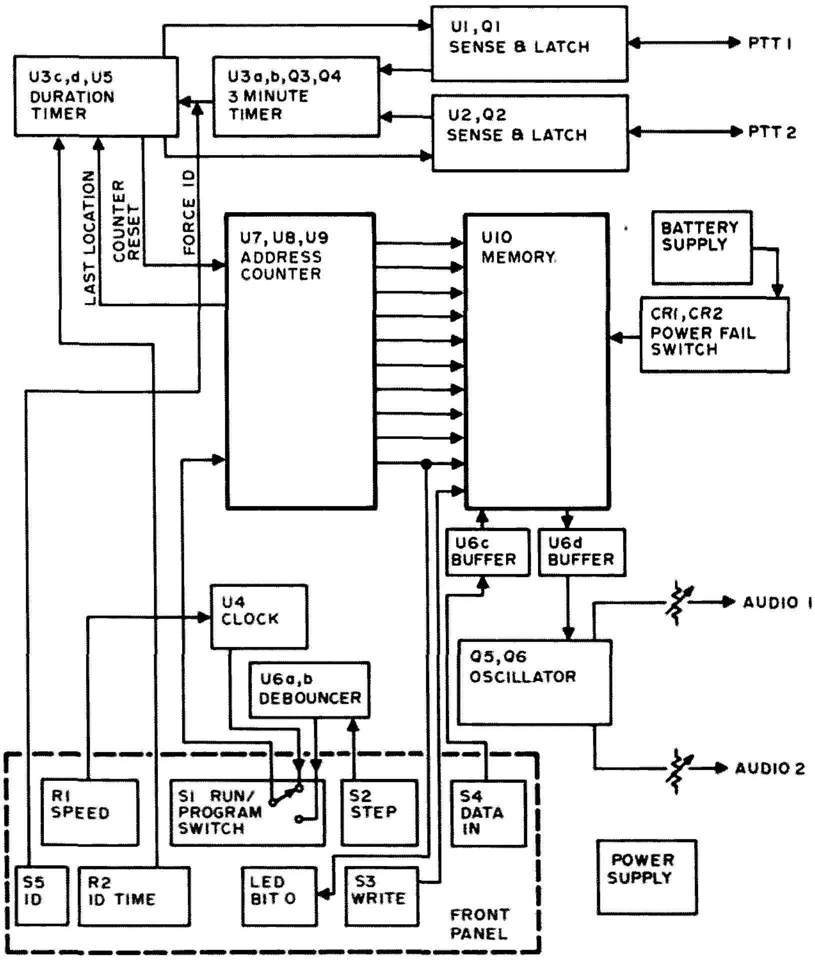

Fig. 1. Block diagram.

by
Robert Glaser WA3MSW
3922 Algiers Road
Randallstown MD 21133

There are a large number of repeaters on the air these days, and most have CW identifiers. The CW operator who takes a sojourn into the repeater bands is inundated with repeater callsigns. After a day or two on the same repeaters, listening to the dull but prevalent "DE WR3ABQ" type of repeater identification becomes rather boring. Being an avid CW operator as well as repeater user, I decided that a more interesting type of repeater identifier could easily be built. It was decided that the identifier should:

1. Be easily reprogrammable (without opening the case).
2. Have capacity for long messages.
3. Retain its memory during power failures.
4. Service two repeaters.
5. Be relatively inexpensive (under $40).

The identifier was to be used at a site where two repeaters are located with the same callsign (150 and 450) – hence the fourth point.

An identifier was designed and constructed which satisfied the above requirements. It is programmed from switches on the front panel, has a 1024 bit non-volatile memory, identifies two repeaters, and costs about $30 to $40 to build (with new parts).

Other Identifiers

The distinguishing feature of identifiers is the memory. Identifiers may be classified according to the type of memory they use. There are basically two kinds of electronic identifiers in use today. The first and older of the two uses a diode matrix for memory. The identifier is programmed by soldering diodes in a matrix. The disadvantages of this system are that large memory units become cumbersome, and that reprogramming entails opening the unit and physically moving diodes around.

The other type of identifier uses read only memory (ROM). These are fairly new devices and can store more in less space than a diode matrix. Typically, fusible link ROMs are used because these are the most inexpensive. The fusible link ROM is programmed by selectively melting fusible links inside the integrated circuit chip. Naturally once a link is melted there is no way to put it back. Generally a ROM of this type can be programmed only once. However, to change the identification in this type of identifier it is only necessary to reprogram another ROM chip and replace the old ROM with the new one.

The latter type of identifier is more easily changed than the former, but still lacks versatility in that a different chip must be purchased every time it is desired to change the identification. This would become impractical if the memory were to be changed every few weeks.

There are alternatives to the fusible link ROM. There are available programmable, erasable ROMs. These can be erased by exposure to ultraviolet light. However, a specialized and complex programmer unit is needed in order to program them. These chips are presently in the $20 price class.

There is another type of memory which, in the past, has not been used in identifier circuits. This is random access memory, or RAM. This type of memory is electrically programmable. Moreover, the 2102 static RAM has 1024 bits of storage and sells for about five dollars. There is one disadvantage to using this kind of memory — it is volatile, which means that when the power is turned off the contents of the memory are lost. Both the diode matrix and ROM are non-volatile. A power fail battery can make the RAM immune to short line power failures. The reprogrammable identifier uses such a system.

Theory of Operation

Fig. 1 is a block diagram of the identifier. The oscillator generates a sidetone with two variable level outputs for the repeaters. The memory unit keys the oscillator, and an address counter drives the memory. The identifier has two modes of operation: program and run. The run mode is normal operation, and the program mode allows the memory to be programmed. In the program

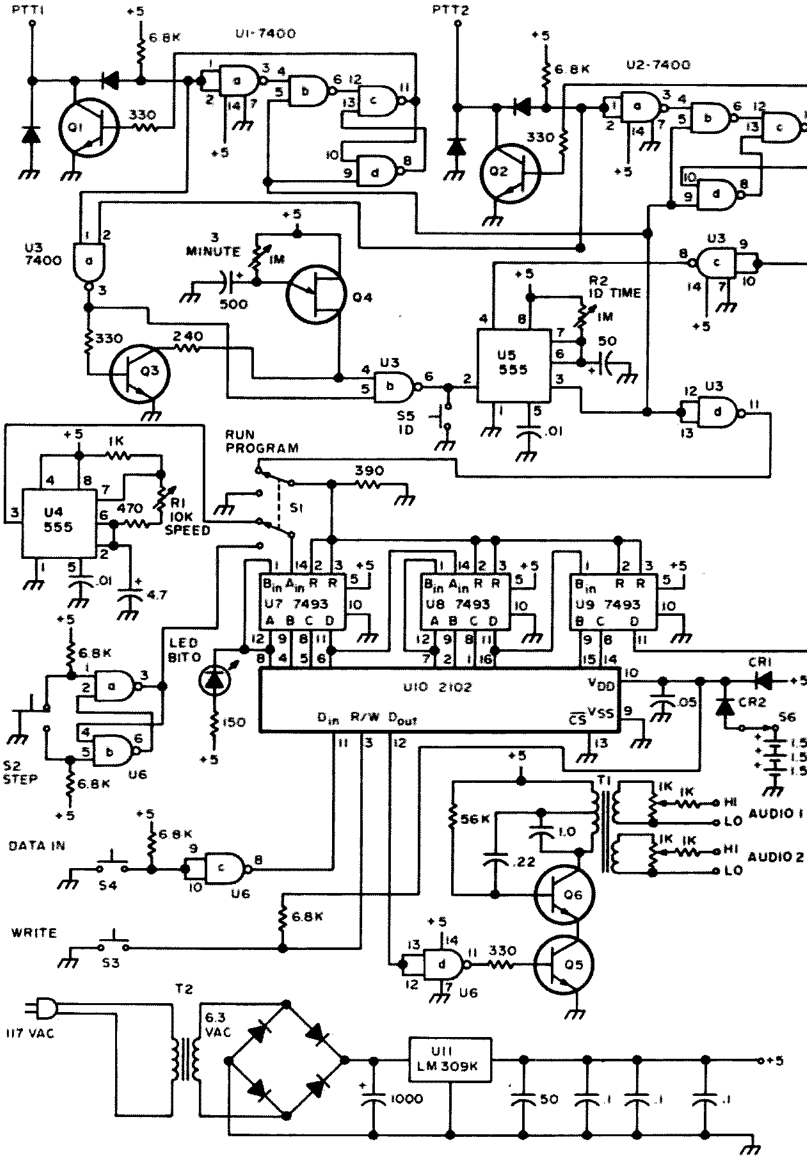

Fig. 2. Schematic.

mode, the address counter is incremented by a push-button on the front panel, and ones and zeros can be written into the memory through the front panel. In the run mode, the address counter is driven by a free running clock. The clock determines the CW speed and is controlled by a potentiometer on the front panel.

A duration timer controls the address counter. When it is low (normally), it inhibits the address counter from being toggled by the clock, and holds the counter at address zero. When it is time for an identification, the duration timer goes high and allows the address counter to count. The timer then falls low (indicating that the identification is over) and resets the address counter. It is the duration timer which determines whether the identifier is identifying or not.

The duration timer is controlled by a three minute timer. This timer does two things: If the repeaters have not been used for three minutes, upon key-up the timer will send a pulse to the duration timer to initiate an identification. Additionally, if the repeater remains on the air, the timer pulses the duration timer every three minutes.

The three minute timer is controlled by two identical sense and latch circuits. The sense and latch circuits go to the push-to-talk lines of the two repeaters. If either of the push-to-talk lines is grounded, the three minute timer is activated. If the duration timer is high when a push-to-talk line is low, the latch on the respective sense and latch circuit is set, which grounds that push-to-talk line to keep the repeater on the air. When the duration timer goes low the latch is reset, letting the repeater drop.

A power supply feeds the electronics, but when power is lost, the memory is switched to internal batteries.

The schematic of the identifier is shown in Fig. 2. The memory consists of a 2102 RAM. The 2102 is an nMOS integrated circuit and has TTL compatible inputs and output. The chip has ten address lines necessary to access 1024 bits. When a particular address is selected, whatever is present at the D_{in} terminal is stored in that location when the read/write (R/W) line goes low. When the R/W is high, whatever was previously stored will be present at the D_{out} terminal when that address is again selected.

The oscillator utilizes an 88 mH toroid coil with two secondary windings. The audio outputs of the identifier are low impedance. With the component values specified, the tone is 1 kHz.

The address counter consists of three 7493 four-bit binary counter chips. The reset lines are tied together and go to the complement of the duration timer.

The clock is a 555 square wave generator. Another 555 is used as a monostable multivibrator for the duration timer. When the input is pulsed, the output is a pulse of predetermined width (5 to 60 seconds).

A unijunction transistor is used as the three minute timer in conjunction with Q3 and part of U3.

The latches are RS flip flops. The reset lines go to the duration timer's output, so the latch outputs are held low until the duration timer goes high, whereupon the set line may go low if the push-to-talk line is low. When the latches are set, Q1 or Q2 is turned on and holds up the respective repeater. When the duration timer goes low, the latches are reset again.

The step control goes to an RS flip flop used as a debouncer, which toggles the address counter. Bit zero of the address is monitored on the front panel by an LED.

The power supply uses a full wave rectifier to an LM309K regulator chip. Three "D" cells in series provide emergency power for the 2102.

Construction

All of the parts used in the identifier are readily available. All of the integrated circuits used are sold by James Electronics. All transistors except Q4 are general purpose NPN silicon and can be bought in bargain packs. The transistors used for Q1 and Q2 should be rated for whatever current the push-to-talk line of the repeaters requires. Q4 is a unijunction and is sold at Radio Shack as #276-111. The diodes are all general purpose silicon and can be bought from bargain packs, with the exception of CR1 and CR2, which should be germanium and capable of passing 70 mA. The oscillator coil is a centertapped 88 mH toroid coil and can be obtained from M. Weinschenker. Two windings of about 25 to 50 turns should be added to the toroid for the outputs. The power transformer is Radio Shack #273-1384. The components used in the timing circuits (particularly the capacitors) should be high quality units.

The prototype was built on a patchboard type of printed circuit board using Molex sockets and jumper wires. Point to point wiring using integrated circuit sockets on vectorboard should work fine. Particular care should be taken to make ground and Vcc lines out of heavy bus wire, with extensive bypassing with .1 uF capacitors. The logic is not being used very fast, but the chips will respond to pulses of several nanoseconds in length, necessitating good rf construction practices. The unit was built into a Radio Shack plastic box with aluminum cover, but it would be better practice to use an all metal enclosure to keep rf out.

Adjustments and Programming

Programming the identifier is a simple matter. The address counter counts up from zero at a constant rate. A zero in a location produces no tone and a one produces a tone. As the counter counts from zero up, a tone will be generated whenever a one is encountered. Since the identifier rests at location zero, a zero must be programmed in that spot, or the repeater will have a constant tone on it. A dit should be one location long, and a dah three. A single zero should follow dits and dahs within a character, and three zeros should follow each character. Characters at ends of words should have seven zeros after them. Table 1 shows the desired encoding for a typical repeater call. As can be seen, "DE WR3AFM" requires only 83 bits out of the 1023 available, so much longer identifications will fit into the memory.

To program the memory with the desired code, apply power and wait for the LED to stop flashing. Backing off the ID time control will stop it. When the light remains on, the address counter will be at location zero. Flip the mode switch into the program mode. To write into the memory, the write button must be depressed with the Data In button down for a zero, and up for a one. A zero should be written in location zero. Push the step button, and the LED should go out, indicating that the counter is now at location 1. Program a one, and proceed on in this manner until location 83 is programmed. It should be noted that there is no way to go back a count, so if a mistake is made the procedure should be started over. A number of zeros should always be placed after the message to give leeway to the duration timer. Put the mode switch back to run and push the ID button. Set the speed control for the desired speed, and then adjust the ID time control so that the counter resets about five seconds after the ID is done. If a mistake is noticed, hit the ID button again, but place the mode switch into program just before the location where the mistake is located. This makes it unnecessary to step through the entire ID when a mistake is near the end. The counter remains where it was before it is placed into the program mode. After programming a message, tie a push-to-talk line low, and measure the time between identifications. Adjust the 1 megohm trimpot for the desired time — nominally three minutes.

Address Contents	Address Contents	Address Contents	Address Contents
0 - 0	30 - 0	60 - 1	90 - 0
1 - 1	31 - 1	61 - 1	91 - 0
2 - 1	32 - 0	62 - 0	92 - 0
3 - 1	33 - 1	63 - 0	93 - 0
4 - 0	34 - 1	64 - 0	94 - 0
5 - 1	35 - 1	65 - 1	95 - 0
6 - 0	36 - 0	66 - 0	96 - 0
7 - 1	37 - 1	67 - 1	97 - 0
8 - 0	38 - 0	68 - 0	98 - 0
9 - 0	39 - 0	69 - 1	99 - 0
10 - 0	40 - 0	70 - 1	100 - 0
11 - 1	41 - 1	71 - 1	101 - 0
12 - 0	42 - 0	72 - 0	102 - 0
13 - 0	43 - 1	73 - 1	103 - 0
14 - 0	44 - 0	74 - 0	104 - 0
15 - 0	45 - 1	75 - 0	105 - 0
16 - 0	46 - 0	76 - 0	106 - 0
17 - 0	47 - 1	77 - 1	107 - 0
18 - 0	48 - 1	78 - 1	108 - 0
19 - 1	49 - 1	79 - 1	109 - 0
20 - 0	50 - 0	80 - 0	110 - 0
21 - 1	51 - 1	81 - 1	111 - 0
22 - 1	52 - 1	82 - 1	112 - 0
23 - 1	53 - 1	83 - 1	113 - 0
24 - 0	54 - 0	84 - 0	114 - 0
25 - 1	55 - 0	85 - 0	115 - 0
26 - 1	56 - 0	86 - 0	116 - 0
27 - 1	57 - 1	87 - 0	117 - 0
28 - 0	58 - 0	88 - 0	118 - 0
29 - 0	59 - 1	89 - 0	119 - 0

Table 1. Example of programming a typical ID: "DE WR3AFM."

Results

After wiring, the only problem encountered was one of the Vcc lines being too small and poorly organized. After remedying this problem, the identifier had no other problems. After the unit was in operation about a month the speed began to slowly vary. Replacement of the components in the clock circuit fixed this problem. The identifier is located in the bottom of a 450 MHz repeater cabinet, next to a 150 MHz repeater, in a building with dozens of 150 MHz and 450 MHz repeaters. There has been no problem with rf getting into the identifier, even though it is constructed in a plastic case. The identifier has been installed for several months and has been working continuously on the Baltimore Amateur Radio Club's 146.07/146.67 and 444.35/449.35 repeaters. The batteries have not been replaced, and they have been successful in retaining the memory when power failures have occurred. It generally takes between five and fifteen minutes to program the identifier. BARC repeater users have been listening to the CW as it spouts notices and comments. If nothing else, this type of identifier makes users cognizant of the fact that the tones actually say something, and are not something to be constantly ignored, as is the case with too many repeaters across the country. ■

Parts List

CR1, CR2 – germanium diodes, 70 mA
Q1, Q2, Q3, Q5, Q6 – general purpose NPN silicon (2N3904)
Q4 – unijunction (Radio Shack #276-111)
R1 – 10k potentiometer with switch
R2 – 1M potentiometer
S1 – DPDT toggle switch
S2 – momentary push-button SPDT
S3, S4, S5 – momentary push-button SPST
S6 – SPST mounted on R1
T1 – 88 mH centertapped toroid coil with two 50 turn windings added
T2 – 6.3 volt power transformer (Radio Shack #273-1384)
U1, U2, U3, U6 – 7400 quad NAND gate
U4, U5 – NE555 timer
U7, U8, U9 – 7493 four bit binary counter
U10 – 2102 1k static RAM memory
U11 – LM309K voltage regulator

CONTESTS

from page 17

counties or bands. They may be worked on different bands in each county for point credit only. Mobile stations contacted on a county line count as one contact but two or more multipliers. Portable stations that change counties during the contest may be worked for both point and multiplier credit from each new county. Fixed stations may be worked by other fixed stations only once during the contest regardless of bands. Fixed stations may be worked, however, by mobile stations each time the mobile station changes counties or bands. Repeat contacts between mobile stations are permitted as long as they are on another band or at least one of the mobiles has changed counties. KL7 and KH6 are considered DX and maritime mobiles are considered fixed stations for scoring purposes.

EXCHANGE:

RS(T), county and state (country for DX). Mixed mode contacts are permitted, but at least one station must be on SSB.

FREQUENCIES:

Suggested frequencies are plus or minus 10 kHz of following: 3.935, 7.240, 14.290, 21.390, 28.580 MHz. No credit for contacts on county hunter net frequencies of 3.943, 7.238, or 14.336 MHz is allowed.

SCORING:

Contact with fixed US or Canadian station = 1 point; contact with DX stations = 5 points; contact with a mobile station = 10 points. The multiplier is the total number of US counties plus Canadian stations worked. Take credit for a county only the first time it is worked. A county does not count again even if worked again on a different band, but a Canadian station counts each time it is worked. The final score is then the total number of QSO points times the total multiplier.

LOGS:

Logs should include the date and time, the station worked, the report exchanged, county, state, band, claimed points (1, 5 or 10), and each new multiplier should be numbered. Check sheets are not required but would be appreciated on all scores over 100,000 points. Summary and log sheets are available free for a #10 SASE or SAE and appropriate IRCs from: James L. Willingham KØARS, Route 1, Bevier MO 63532. All entries should be received by KØARS by June 1, 1976 to be eligible for awards. DX entries should use air mail.

AWARDS:

Plaques will be awarded to the highest scoring fixed US or Canadian station, DX station, and first and second highest scoring mobile stations. Certificates will be given to the top 10 mobile and fixed stations in the USA and Canada, and to the highest scoring station in each DXCC country. Only single operator stations are eligible for awards; multi-operator certificates will be awarded as merited. A station may enter as both fixed and mobile, but with separate scores. Winners will be announced in the MARAC Newsletter and at the 1976 Independent County Hunters Net Convention (to be held in July '76).

ZERO DISTRICT QSO PARTY

Starts: 2000 GMT
Saturday, April 17
Ends: 0200 GMT
Monday, April 19

The contest is sponsored by the TRA-ARC of Iowa State University. Stations outside of the zero district will exchange reports with stations within the zero district only. Zero district stations may work anyone. Any station may be worked once on each band, on each mode. If a mobile station changes counties, he may be worked again — so be sure to look for mobile stations changing counties.

FREQUENCIES:

3570, 7070, 14070, 21070, 28070, 3900, 7270, 14300, 21370, 28570, 3725, 7125, 21125.

EXCHANGE:

RS(T), QSO Number and ARRL section. Zero district stations will also send their county along with the ARRL section.

SCORING:

Zero district stations: Multiply the total number of contacts by the total number of different zero district counties, foreign countries, and ARRL sections. Non-zero district stations: Multiply the total number of contacts by the total number of different zero district counties worked.

ENTRIES:

To compete — logs, claimed score and SASE (for results) must be sent to: TRA-ARC, WAØTKK, B406 Wilson Hall, Ames IA 50013 no later than May 14th. Appropriate certificates will be awarded.

TWO METER ALL MODES CONTEST

Contest Period: 0300 to
0700 GMT Sunday, April 18

This contest is sponsored by the York Radio Club and Global Research and is open to all radio amateurs, worldwide. Any 2 meter contact is valid except for the use of repeaters other than OSCAR. Use all modes: SSB, CW, AM, FM, SSTV, RTTY, or FAX.

EXCHANGE:

RS(T) and state.

SCORING:

Score one point for each completed two way contact. A multiplier of 1 per mode will be given for every mode worked with a minimum of 5 contacts per mode. Example: A station working 5 contacts on AM, 5 on CW, and 5 on SSB would have a multiplier of 3. Final score is the QSO points times the final multiplier.

LOGS:

Logs should show your name, call, address, state, and input power. For each station worked, include their call, state, and RS(T) sent and received. Show your total score, sign the logs, and submit to: Phil K9DTB, c/o Global Research, PO Box 271, Lombard IL 60148. Logs should be postmarked no later than May 8th for scoring.

AWARDS:

All entries submitting logs will be listed in the YRC Circuit Board and will receive a 3 month complimentary subscription. The first place total score in each category will receive a Bicentennial certificate and a prize from Global Research. Second place totals in each category will receive the Bicentennial certificate. Categories: Mobile — any mode or power; Portable — any mode or power; High power — 100 Watts or more; Medium power — 51 to 99 Watts; Low power — 50 Watts or less; OSCAR — 2-10 meters.

Any questions concerning rules can be answered by K9DTB (Phil) at 312-279-4658. The decision of the contest committee is final.

PACC CONTEST

Starts: 1200 GMT
Saturday, April 24
Ends: 1800 GMT
Sunday, April 25

This year's contest is again sponsored by VERON in Nederland and is open to all single and multi-operator stations. Use all bands from 160 to 10 meters, but please keep the lower 10 kHz of CW bands and upper 25 kHz of phone bands free. General call is "CO PA"; PA/PI/PE stations will call "CQ PACC."

EXCHANGE:

RS(T) and QSO number starting with 001. Dutch stations (PA/PI/PE) will also send a 2 letter code indicating their province. The possible provinces are: GR, FR, DR, OV, GD, UT, NH, ZH, ZL, NB, LB, YP.

SCORING:

Each QSO counts three points. Each station may be worked only once per band regardless of mode. Final score is the total number of QSO points times the sum of all worked provinces on each band (max 72).

AWARDS:

Certificates go to the highest scoring stations in each country and district. (A certificate will go to each call area in the US, Canada, New Zealand, Brazil, Australia, Japan, Chile, Russia and South Africa.)

LOGS:

Logs should show: date and time in GMT, station worked, QSO number sent, QSO number and province letters received, multiplier column for each band (only show a multiplier the first time it is worked), and points. Logs must be sent to VERON Contest Manager PAØDIN, PO Box 1166, Arnhem, The Nederlands, postmarked not later than June 30, 1976. Each log must be signed and indicate that the participant has observed the contest rules as well as all regulations of amateur radio in his/her country.

FOR SWLs:

Show information exchanged between PA/PI/PE *station and other station.* Each station heard counts 1 point; otherwise scoring is the same.

Continued on page 115

RESULTS

RESULTS OF 1975 YL-ANNIVERSARY PARTY

COMBINED SCORE (phone and CW):

CALL	POINTS	
K6DLL	5356.25	Cordoran Award
YV5CKR	4839	Hager World DX Award
WA1NXR	3796	

PHONE SCORE:

CALL	POINTS	
K6KCI	5696	Gold Cup
W2GLB	5049	Certificate
K6DLL	5232.5	Certificate
FG7XL	4746	
F5RC	3910	
WA1UVJ	3827	

CW ONLY SCORE:

CALL	POINTS	
YV5CKR	1056	Gold Cup
DKØEK	861	Certificate
DK5TT	828.75	Certificate
I3MQ	630	Certificate
DF2SL	288.75	
WA2DMK	288.75	

Note: No one qualified for the NA-Central America DX-Hager Award!

by
Ralph Orozco, Jr. WB6FVW
2081 Bolero Avenue
Hayward CA 94545

Put That AM Rig on FM

Bring the old AM rig out of retirement and put it on FM for about $10.00 or less. It's one of the cheapest ways to get on FM that I know of, especially if you already have a rig. As most of us know, with an AM transceiver, receiver slope detection can receive FM at a readability comparable with an AM signal of just about the same strength. On the other hand, in transmitting FM, an advantage is that comparatively simple means may be used to generate an FM signal.

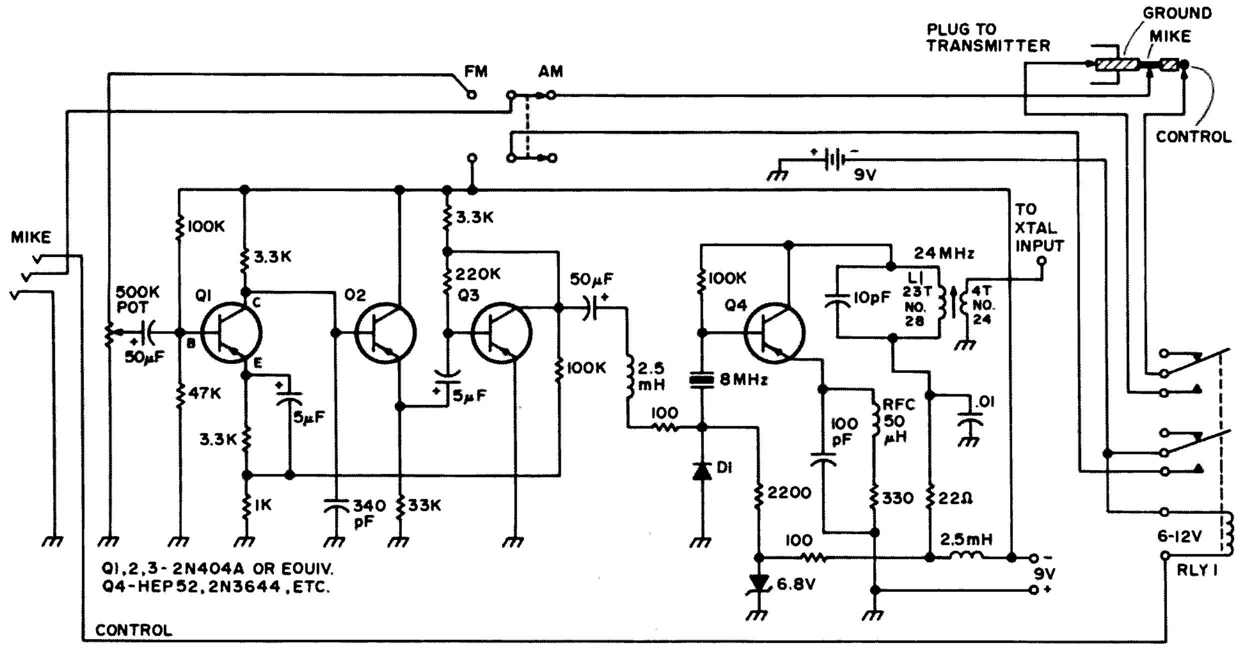

Fig. 1. Circuit of FM adaptor.

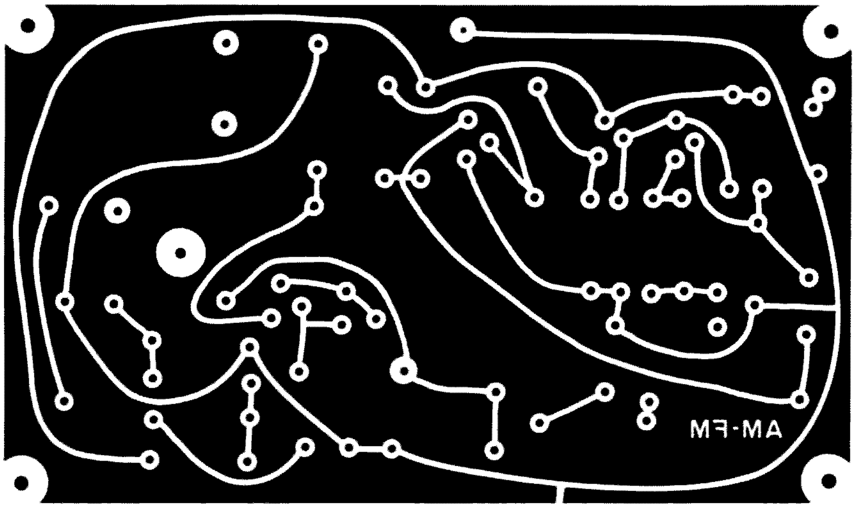

Fig. 2. PC board pattern.

Because a VHF transmitter multiplies the original oscillator frequency several times, only a small amount of deviation at the oscillator frequency will be required to produce narrow band FM. The frequency modulator contains a microphone preamplifier, driver amplifier and 8 MHz crystal oscillator at 24 MHz output. The audio from the modulator drives a variable capacitance diode in the crystal oscillator. I used a silicon switching diode. Frequency multipliers in the transmitter increase the deviation to about 8.5 kHz at the output frequency. A microphone and control with push-to-talk cable plug in the transmitter's microphone jack. It carries the push-to-talk line, but no audio unless the switch is in the AM position. Deviation can be reduced for narrow band FM by adjusting the audio pot on preamp. Use a hi-Z microphone. Results are worth it; I have been using my FM modulator 6 months, working several 2 meter repeaters and signal reports have been good. ■

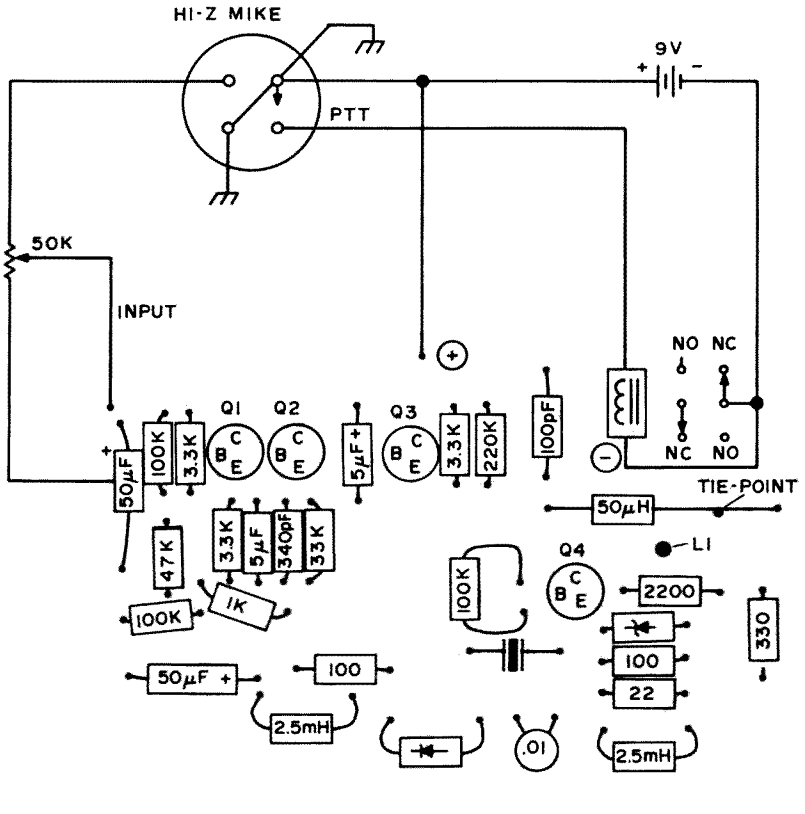

Fig. 3. PC parts layout.

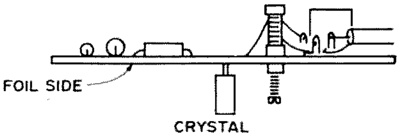

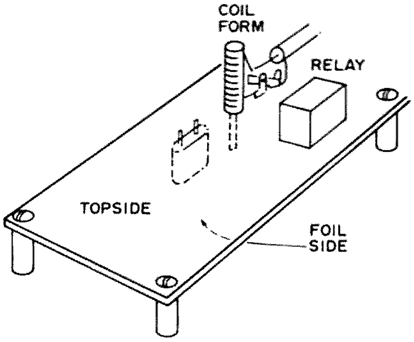

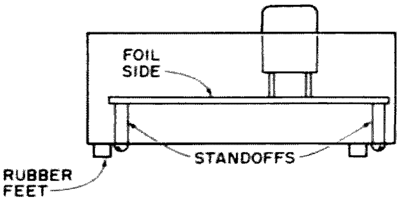

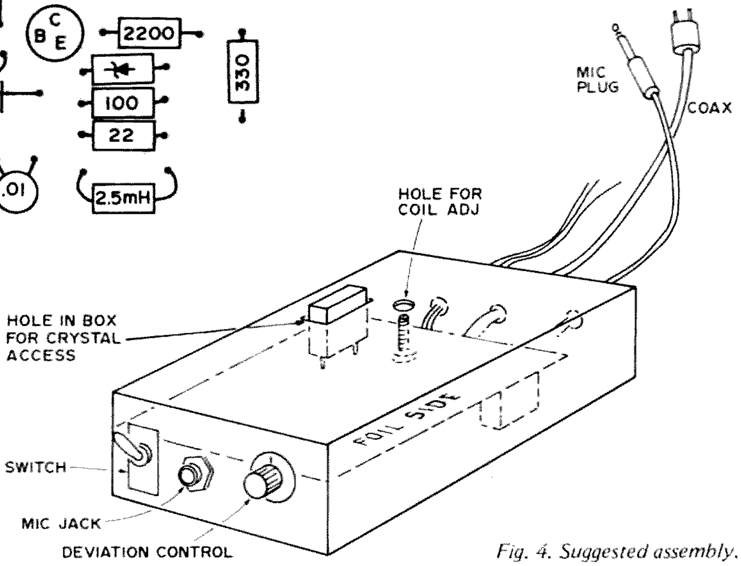

Fig. 4. Suggested assembly.

by
W. J. Hosking W7JSW
8626 E. Clarendon
Scottsdale AZ 85251

A Carrier Operated Relay (COR) for Your Receiver

Fig. 1. Schematic of the COR. Q1 could just as well be an MPF102 or any other N channel JFET. Q2 should be a 200 mA, 30 volt transistor. RY1 is a 26 volt telephone type relay. The LED is nothing more than an indicator I hung on as an afterthought.

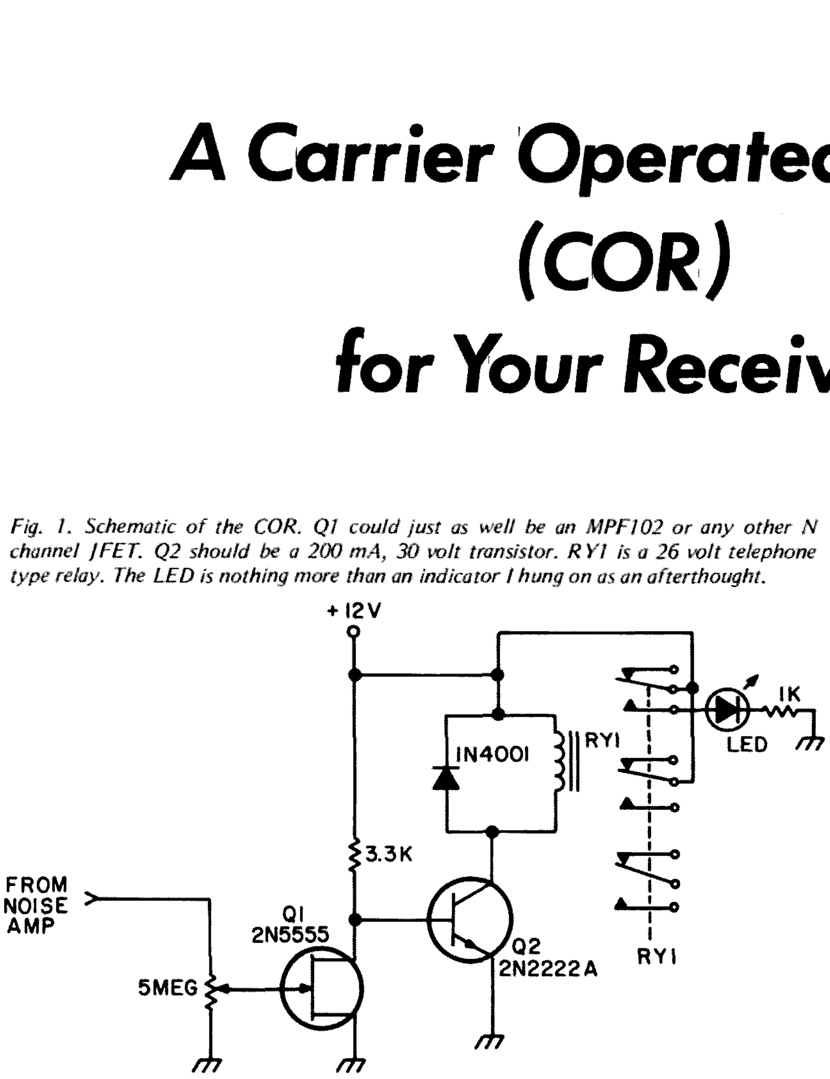

Fig. 2. Connection for a TA141A type receiver is shown.

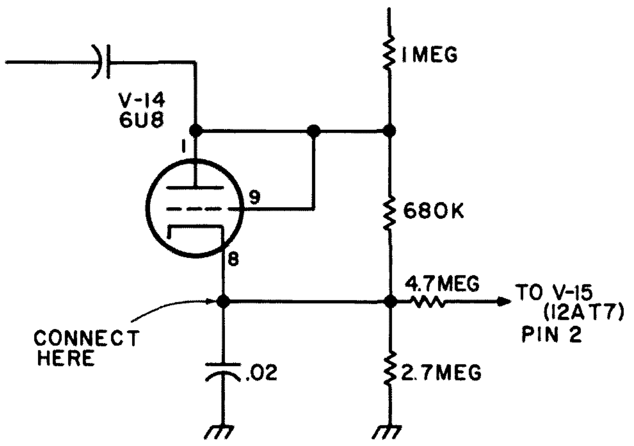

I have a Motorola T44 which I have built power supplies for, mounted in a rack and now use as a base station. I now want to use that equipment as a 450 MHz repeater but, of course, the receiver has no COR. I could have bought a squelch relay kit made for the radio but, besides adding more tubes to the radio, it would cost money.

I retreated to my junk box and came out with a few JFETs, some NPN 300 mA transistors and a telephone type relay. The book of schematics I have for Motorola gear says the squelch relay is connected to the cathode of the noise rectifier on the 450 radios. A measurement there with a VTVM showed a voltage that rested at +2 V dc squelched and swung to about −12 V dc with a carrier present. This seemed compatible with my FETs so I put together the circuit in Fig. 1.

The cathode voltage is brought out across a 5 meg pot. The circuit starts loading and affecting squelch action when a value much below 2 meg is used. The JFET gate is taken off the arm of the pot. When the receiver is squelched, the slight positive voltage causes the FET to conduct, which in turn holds Q2 off. When a carrier is received, the gate swings negative turning Q1 off and Q2 on, thus closing relay RY1. By the way, the relay I have is marked 26 volts but I find it works fine at 12 volts and only draws about 40 mA.

Conclusion

This circuit is perfect for all of you who like to correct, improve, or add to magazine circuits. There are hundreds of ways this could be improved or modified but I wanted it simple, cheap and workable and this fits those needs admirably.

For those of you with T44s, I include Fig. 2 which shows where to hook up the COR. ■

by
Ian Burn VE6OB
16016 78th Avenue
Edmonton, Alberta
Canada T5R 3E4

A $5 100 Watt Amplifier

Over the past few months there have been two antenna-building workshops sponsored by the Northern Alberta Radio Club in Edmonton. At each workshop 15 two meter beams were constructed. The spacing and element lengths are fairly standard, but the construction methods might be unique. The original intent was to construct a small beam that could be easily disassembled for portable use; however, a number of fellows required a simple base station antenna, so materials and methods were chosen to suit both needs. The following outlines the materials and methods used.

Materials

The boom is constructed from 1/2" Type M (very thin wall) copper tubing, at least 48 inches long. A piece 6" to 8" longer would be required for ideal mounting methods, to be discussed later.

The elements are made of 1/8" diameter brass rod. This is relatively expensive, about 15¢ per foot, but the amounts required are not excessive. The element lengths are 40", 38", 36" and 35-1/2".

The gamma match is made of a 4-3/4" length of 1/16" diameter brass brazing rod (or copper), a 10 or 12 mmfd disk ceramic capacitor (12 preferred), a removable shorting clamp of your design, and a small stainless steel worm gear hose clamp.

RG58 coaxial cable is recommended if the antenna is for portable use.

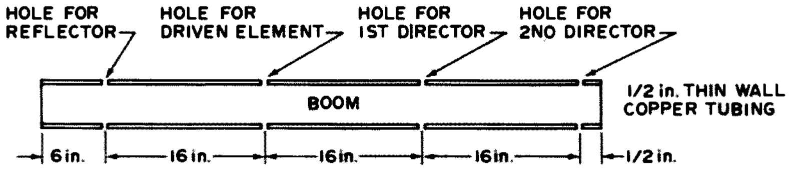

Fig. 1. NOT TO SCALE

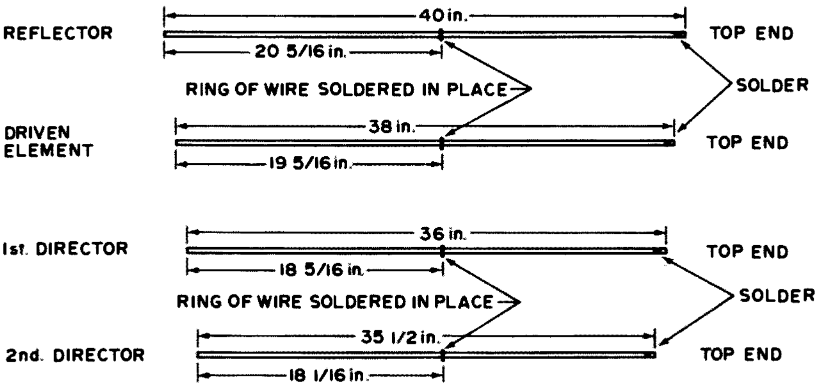

Fig. 2.

Construction

The boom is prepared by drilling 1/8" diameter holes on 16" centers. This can be accomplished by careful use of a drill press or by a hand drill. Since most workshops do not have a drill press, the second method is described.

First, draw or scribe a circle around the tubing at each of the four element positions, i.e., on 16" centers as shown in Fig. 1. A tubing cutter, used with care, will do a good job. Alternatively, wrap a sheet of paper carefully around the tubing so that it doesn't spiral and the edge will form an accurate guide for your pencil.

Once all four lines have been drawn, lay a straight edge on the top of the tubing and using a center punch, mark the 4 hole locations. These 4 holes can now be drilled but DO NOT DRILL THROUGH BOTH SIDES OF THE PIPE.

Again, with reasonable care, mark the holes on the bottom side of the tubing using a straight edge. Drill 4 holes. With a minimum amount of luck these holes will line up with the first set!

The elements should be cut to the lengths shown in Fig. 2, and a small piece of wire wrapped around and soldered to each element as shown. This is required to keep them from falling through. For permanent installation the elements may be soldered to the boom. (I have used the "gravity system" on my base station antenna for the past year with good results.) A spot of solder on the top of each element ensures that they are put in the right way up. Note that the wire ring is *not* in the middle of the elements. When disassembled, the elements are stored inside the boom. Two small corks will ensure their staying put!

The gamma match is very simple as can be seen in Fig. 3. The measurements should be followed fairly closely. The shorting clamp can be made in any number of ways.

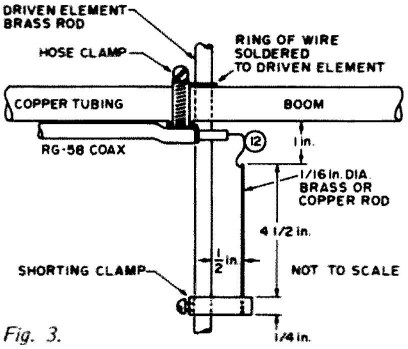

Fig. 3.

A solid block of brass can be drilled to accommodate the driven element and the gamma rod with a set screw to hold them in place. A simpler method is to fold a piece of brass or copper over both rods and place a clamping bolt in the middle. It is important to have something that can be easily loosened if the antenna is to be readily dismantled.

The hose clamp, which connects the shield of the coaxial cable to the boom, should be as close to the driven element as possible. Ideally, the cable should be dressed along the boom past the reflector and then down the support mast. A number of fellows have dropped the cable between the driven element and the first director and they report good results. Figs. 4(a) and 4(b) show the two methods with 4(a) being the preferred.

For base station operation I have fastened the boom directly to the boom of my triband beam as shown in Fig. 5.

Cost

The cost of materials should be slightly less than \$5.00. If a group can get together and make 15 antennas with 48" booms (15-3/4" element spacing), this will prove to be the most economical since both copper tubing and brass rod come in 12 foot lengths. Brass brazing rod comes in 36" lengths and could be spliced up to the 40" and 38".

Test Results

At a recent two meter antenna-testing workshop, this beam provided a 10 dB gain over a reference dipole. There is no doubt in the 10 dB value, but there may be some doubt in the efficiency of the reference dipole used. In any case, the antenna works well. ■

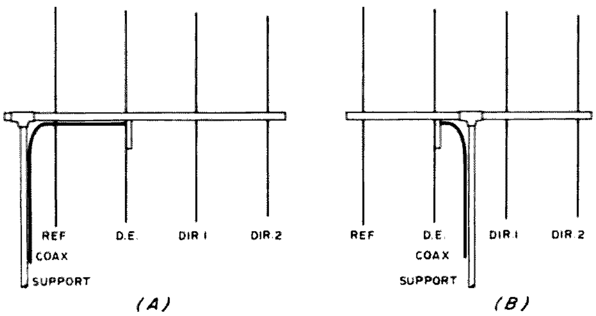

Fig. 4.

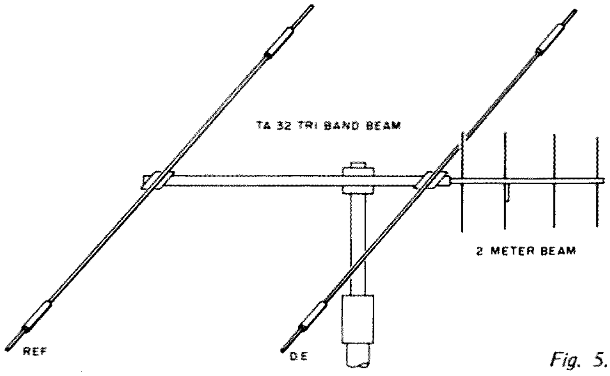

Fig. 5.

by
Geoffry W. Kufchak WA1UFE
15 Fourth Avenue
Westover AFB, MA 01022

Build A 220 MHz Repeater

One must first have a radio to build a repeater. I chose to use my Midland 220 rig. This radio is ideally suited to repeater construction as it is in three separate sections: the exciter, receiver and power amplifier. I separated the sections and then each was installed in its own aluminum chassis, except for the power amplifier, which was mounted on the rear panel of the main chassis. The chassis I'm using to house everything is a Bud AC-415, which is 17" wide, 10" deep and 2" high. The small chassis that the receiver and exciter are mounted in are 7" wide, 5" deep, and 2" high.

Some minor changes were necessary to separate the receiver from the rest of the radio as the receive crystal and trimmers are on the exciter board. This was solved by etching a small PC board and mounting the parts on it and locating it with the receiver. The channel selector switch can be eliminated along with all the parts on the exciter board that were for the receiver. The power amplifier heat sink can be removed (carefully) and discarded, as the rear panel of the main chassis makes a much better heat sink. Throw away the pilot lamps as they are current hungry, drawing over 100 mA. Without them the receiver draws about 90 mA squelched.

The power amplifier is probably the trickiest section to work with. No problems were encountered mounting it; however, it does require a little bit of tweaking to get power out of it when it's mounted. Some stretching of coils and repeaking of capacitors took care of that problem. Expect about 15 Watts or more when using a 12 volt auto battery, and up to 20 Watts with a well regulated 14 volt power supply.

At the present time I'm using what will eventually become an operating repeater as a duplex rig, on the West Hartford 220 repeater featured on the June 1975 cover of *73*.

Referring to the photograph of the top view, the enclosure on the left is the exciter board, the one on the right is the receiver board and in the center rear is the power amplifier.

The sensitivity of the receiver is quite good as it comes from the factory, being .5 uV or better for 20 dB of quieting. Careful retuning will improve this only slightly, so a preamp seemed desirable.

I realized that finding material on the 220 MHz band is at the least difficult, and checking through a few publications confirmed this fact. I definitely wanted a preamp, so I was forced to adapt existing designs for two meters. An excellent design that can be made to work on 220 is in the *FM and Repeaters* book that the ARRL publishes. The schematic and board layout are on page 180. The coils are the only changes needed to make this preamp work quite well on 220. Change L1 to 4 turns, No. 18, 1/4" dia., 1/4" long. Do not change the tap location. L3 remains the same except for the diameter, which is 1/4".

Another change which can be done to the preamp is to reverse the foil pattern so that the parts may be mounted on the same side. Then two small pieces of double-sided PC board can be used to shield the input and output. See the 225% PC board. Tune the preamp as explained in the book.

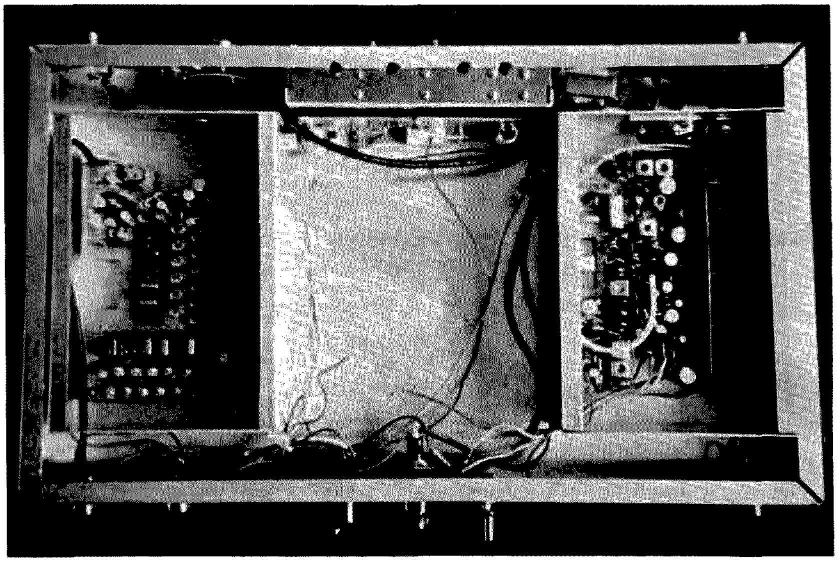

The transmitter is as about as good a circuit I've ever seen performance-wise. Midland is definitely being modest when they claim 10 Watts output. Before I even started on this project, the rig was putting out 18 Watts at 14 V dc input, checked on a Bird Thruline. An automatic swr shutdown circuit is also incorporated in this rig, but I have bypassed it by not running the rf output on the relay board. This was so I could eliminate the eventual problems one encounters with relays by replacing it with a solid state keying circuit. I have already keyed the transmitter into an open line at high power and no damage to the finals occurred. This is probably due to the fact that Motorola power transistors are used, a 2N6081 being the final.

Since I wanted this to be a really good sounding transmitter, I also modified the modulation stage to produce true frequency modulation, rather than the phase modulation employed in the rig. This is not as hard

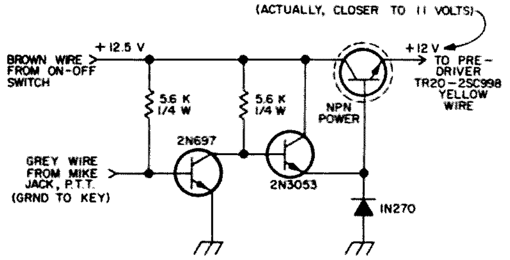

Fig. 1. Solid state transmit control for the Midland 220 repeater. Tie red wire from transmitter board (27) to B+ – this keeps the exciter operating continuously. The output from TR21 is about 100 mW, so running it all the time doesn't hurt, since the TR20 base has a 100Ω ½ W to ground to present a load. Also, the lower voltage on TR20 hasn't decreased power; I still get 15 Watts out at 12.5 volts (automobile battery).

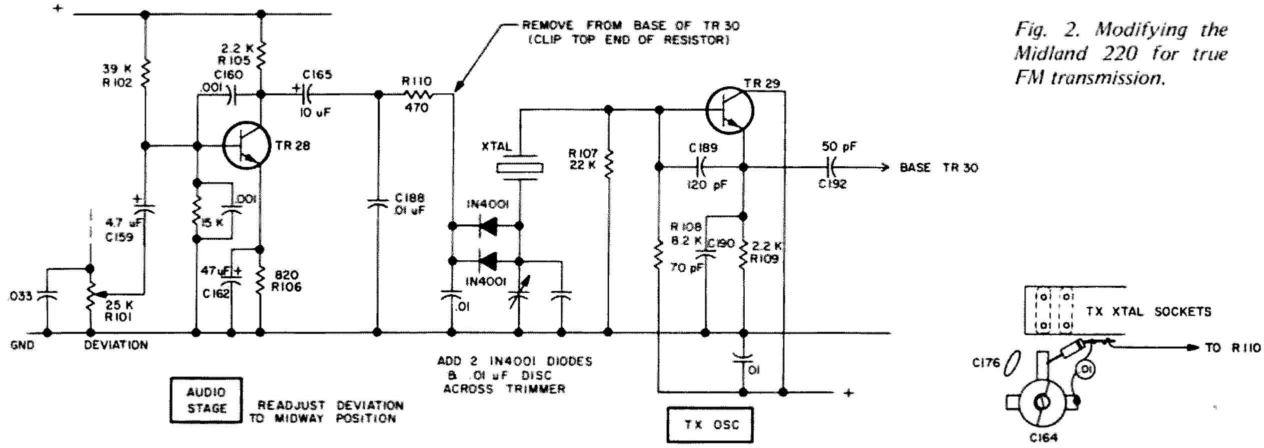

Fig. 2. Modifying the Midland 220 for true FM transmission.

to do as one would think. Since a repeater has only one transmit frequency, shortcuts can be taken. Add two 1N4001 diodes, a .01 uF disc capacitor, and clip one resistor lead and there you have it! The accompanying diagram shows where to make the changes.

I mentioned two paragraphs back that I have converted the radio to solid state keying. The circuit that I am using is also shown; parts and layout are not critical. Any NPN transistor will work, but just in case, I mounted the power transistor on the main chassis. So far it hasn't even gotten warm, even when keyed for long periods. I mounted the other parts on a piece of .1" grid perfboard and mounted the board on the back panel near the power transistor. This circuit keys the B+ to the pre-driver transistor only. The finals have B+ on them continuously. Also, I wired the exciter to operate continuously. Connecting the red wire from the exciter board at point 27 accomplishes this.

The microphone jack and accessory jack were both brought out and mounted on the front panel. The accessory jack is used to feed in the audio from my Touchtone pad. The power switch, a fuse holder, the audio and squelch controls and a 1/4" phone jack were also mounted on the front.

BNC connectors were used for the antenna connections, the chassis mount type being UG-1094s. I plan to change these to type N in the future. Number 14 insulated wire is used for the dc power leads. About six feet should be enough for any installation.

The space in the center of the transmitter and receiver is for the master logic board control circuitry, which is currently under construction. This will be presented in a future article.

If anyone would like to duplicate the layout of this project, scale drawings and additional details are available from the author. Please send a large SASE. Let's get more 220 repeaters on the air to show that we do want to keep the band. As the old saying goes, "220, USE IT OR LOSE IT." ■

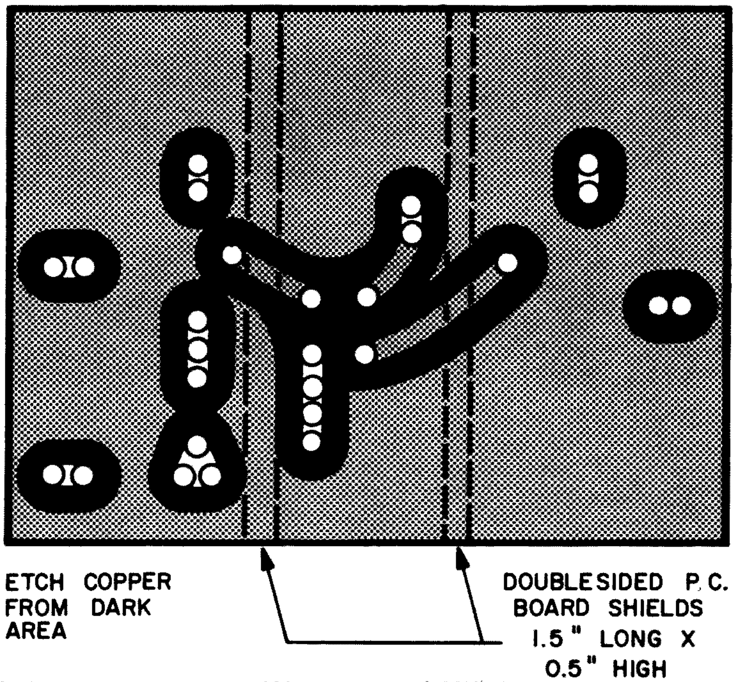

Fig. 3. Foil and component side, 220 MHz preamp (225%). Parts location same as in the FM and Repeaters *book.*

by
Fred Simonds WA1SNI
c/o *73 Magazine*

Carrier Indicator for Your Regency

In mobile and high-noise environments, it can be difficult to distinguish between carrier-off and full quieting conditions. If you have ever tried to key a repeater and heard nothing, only to hear the squelch close up a moment later, you know what I mean. Having noted (and envied) the carrier-indicator feature in Icom equipment as well as in commercial gear, I decided to see what

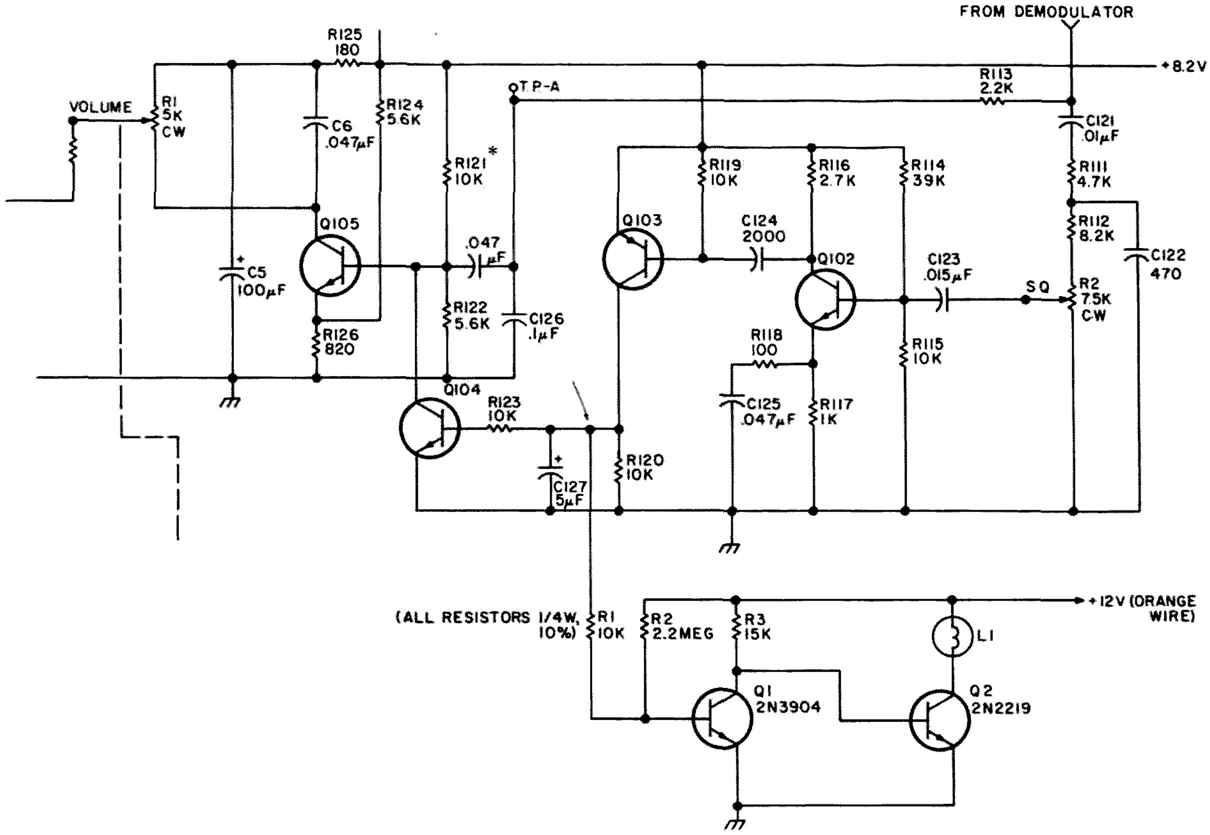

Fig. 1. Regency HR-2B squelch circuit, with inverter and lamp driver.

could be done with my Regency unit. However, this circuit is equally applicable to other rigs with similar squelch circuitry.

This modification requires no additional holes or otherwise permanent disfiguration which would reduce resale value. No etch cutting or board chopping is required. The unit may be restored to its original factory condition within a few minutes. The circuit works very well, and last but not least, it's cheap and simple!

The circuit is shown in Fig. 1. It is essentially nothing more than an inverter, Q1, and a lamp driver, Q2. A small amount of base bias is applied to Q1 to prevent low level noise spikes from turning the lamp on when no audio is heard in the speaker. Also, when Q1 is off and Q2 is on, the lamp lights fully — never at partial brilliance. This is because the biasing arrangement is such that the transistors bias themselves into saturation or cutoff with no in-between states. So even a noise spike that gets through to the speaker will illuminate the lamp momentarily. Yet the squelch control may be set at "critical squelch" and you will still have "crisp" lamp operation.

The Regency squelch circuit is quite straightforward (see Fig. 1). Demodulator noise produced during the no-signal condition is filtered and applied to a noise amplifier, Q102, through the squelch pot. The noise amplifier output is then ac coupled to dc amplifier, Q103, whose output is filtered and dc coupled to the base of transistor switch Q104. The switch simply grounds out or opens the input to the first audio stage, thus shunting noise to ground yet permitting audio to pass through to Q105.

When noise is present, it is amplified by Q102 which turns Q103 on fairly hard. Residual ac ripple is removed by filter capacitor C127. This positive dc voltage, about three volts, turns on the switch, Q104. When ac noise disappears with signal, Q103 is turned off, which in effect grounds the base of Q104, thereby turning it off and permitting audio to pass.

Since one squelch switch is already in use, why not add another one for the lamp? With proper isolation (provided by R1), squelch operation should be unaffected. However, the squelch switch is normally turned on, so an inversion is provided by taking the collector output of Q1 to drive Q2. Thus, the lamp turns on only when carrier is present. As mentioned earlier, R2 provides a small amount of base bias which the squelch signal must overcome in order to turn the lamp on. In this way, short negative-going spikes which would not be heard in the speaker will not illuminate the lamp either. Lastly, Q1 is direct-coupled to the base of Q2, whose collector load is the lamp.

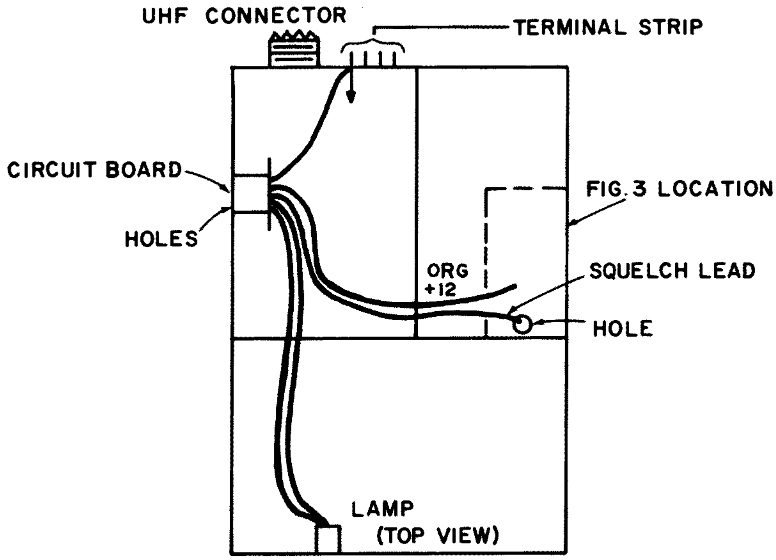

Fig. 2. Layout.

Component Selection

I had always wondered why designers select a particular transistor over another, equivalent transistor. In doing this project, I found out why. First, the devices have usually been used by the designer before, so he is familiar with their characteristics from experience. Second, they are available (in my case, junk box). Third, their general specifications (beta, collector current, power dissipation) are adequate for the task. For Q2, a low V_{CE}(sat) was desirable, since I wanted the maximum voltage drop to be across the lamp, not the collector-emitter junction. R1 was chosen because it would provide both adequate isolation and base current for Q1. R2 was chosen experimentally from observing the lamp. R3 was chosen to minimize current through Q1 and to drive Q2 into cutoff or saturation. As for transistors, I simply used a good general-purpose device for Q1 and a high-current, good gain device for Q2. However, almost any NPN transistors will work, although some may require slight value adjustments in order to work well.

Installation

Since my Regency is synthesized, I don't need the channel window illumination. I removed the orange +12 volt lead from the lamp and installed a lampholder in the hole so conveniently provided by Regency. To this I connected the collector lead from Q2 on one side and +12 volts on the other side. I ran the orange lead to the left rear corner of the radio, near the UHF connector (see Fig. 2). Here I mounted the transistors and resistors on a small piece of experimental circuit board. There are two unused holes here, so I used them to mount the standoffs and then the circuit board. You may need flat washers here, since the holes are rather

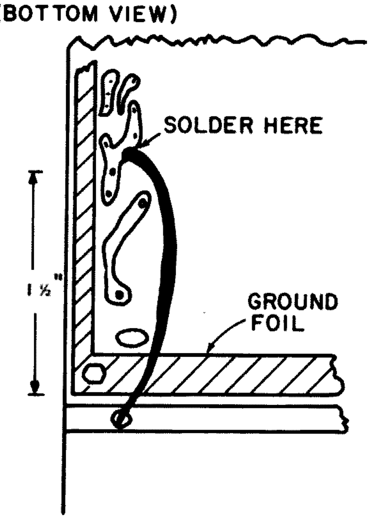

Fig. 3. Foil location detail.

large. Grounding is available at the rear apron terminal strip.

The lead for the squelch switch is provided by running a lead across the board to the foil side through a hole in the frame between the transmitter and the receiver circuit boards. Find the foil that joins R120, R123, and the positive side of C127 (see Fig. 3). Solder the lead here.

You may use the lamp originally provided for the backlight, but it turns on and off rather slowly, so I left it mounted in its clip in case I ever need to restore it to service. I used a Dialco cartridge lamp no. 39 rated at 14 V and 80 mA. Mine has a clear lens. However, the 2N2219 will dissipate .8 W and carry 800 mA, so almost any lamp will work. You could even use it to drive a COR for repeater applications! ■

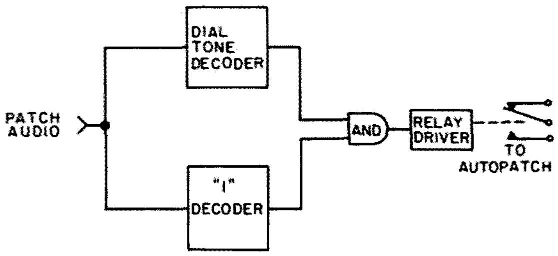

Fig. 1. Block diagram of the decoder system.

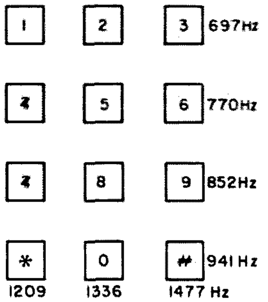

Fig. 2. Standard tone dialing frequencies.

Long Distance Call Eliminator

by
William J. Hosking W7JSW
8626 E. Clarendon
Scottsdale AZ 85251

Our autopatch in Phoenix is an open one and anyone with a tone pad on his radio can use it. The telephone switching center that our line works through was unable to provide us with a tone dialing line without direct long distance dial capability. While this has not been a serious problem, there have been many "malicious" long distance calls, such as to time/temperature in New York City.

I wanted a simple method which would eliminate the direct dial long distance calls without doing a major rebuild of our entire autopatch. One recommendation I received was a digit counter which would allow only seven digits to be dialed. While completely feasible, the idea required more hardware and modifications to the system than I wanted to make. As I was cogitating on the situation and also monitoring the patch, I heard a guy with a marginal signal and weak tones bring up the patch and then get a misdial because his first tone digit was not strong enough to make Ma Bell's equipment function; consequently the dial tone remained until his second tone came along. It took a while to sink in, but in time I realized that the dial tone and the first digit dialed exist simultaneously for a few milliseconds. Therefore, if I decoded the dial tone with a half a second or so delay and also decoded a "1," the combination could be used to hang up the patch phone anytime a "1" was dialed as the first digit of a phone number. The idea is shown in block diagram form in Fig. 1.

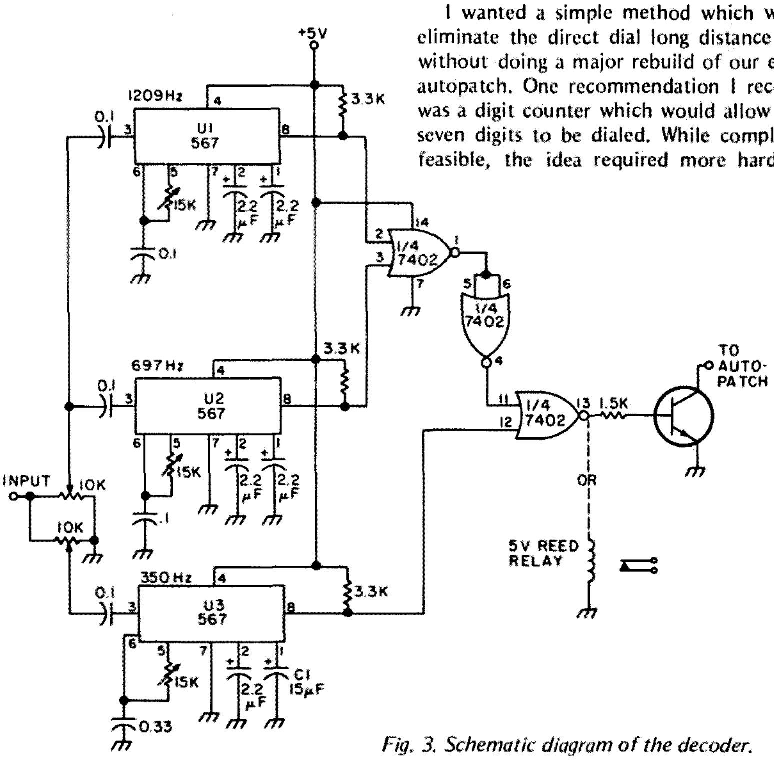

Fig. 3. Schematic diagram of the decoder.

Circuit

A quick check of my reference books showed that Ma Bell is pretty well standardized on a dual tone composed of 350 and 440 Hz for dial tones. Since both tones are well below the normal tone dialing frequencies, I decided to only decode one of the dial tone frequencies – 350 Hz. To decode the "1" I needed two more decoders, one for 1209 Hz and one for 697 Hz (see Fig. 2).

Now, referring to Fig. 1 again, when the 350 Hz dial tone and the 1209/697 "1" tone are present simultaneously, the output of the AND gate goes high thus operating either a transistor switch or a relay which in turn shuts down the patch.

The actual circuit is shown in Fig. 3 and consists of only three 567 tone decoders, a 7402 gate, and either a transistor or a relay. The decoders are connected normally for

567s except for U3 which has added capacity on the output filter. The added capacity causes the device to remain on for a few milliseconds after the dial tone has gone away. Note that C1 on U3 sets this delay and might have to be adjusted slightly to meet individual system needs.

Construction

The unit can be built almost any way you want. I found that, with minor modification, the circuit board for my Single Function Control Decoder (*73 Magazine*, March 1976) works very nicely. The boards are available from Contact, Inc., 35 W. Fairmont, Tempe AZ 85281.

Installation and Operation

First (I mean after the smoke test), using a frequency counter connected to pin 5 of U1, set the frequency to 1209 Hz. In the same manner connect the counter to U2 and adjust the frequency to 697 Hz. Then connect to U3 and adjust for 350 Hz. Now you are ready to install the device in your autopatch.

A sample of how I connected ours is shown in Fig. 4. The power source is a 309k five volt regulator connected across the 25 volt dc relay line. By the way, when using 309s don't neglect the recommended 0.22 uF from input to ground – they sometimes do strange things without that capacitor. The audio input connection is important as it must contain both telephone and receiver audio. I use the audio output from the patch to the transmitter. Then I used a transistor to open the "off" reed relay in our system as shown in Fig. 4. Another method is shown in Fig. 5 using a normally closed relay contact to open the main phone relay in a system.

As it is anytime when using 567s for decoding, they are very level sensitive. Be very careful when setting input levels – otherwise your patch might get falsed off. This is the only application right now where I have 567s in service without an agc amplifier preceding them and I may well yet add one. I hope this cuts down your phone bill – it did ours. ■

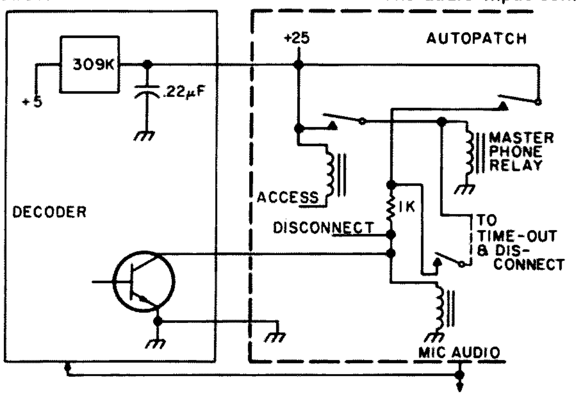

Fig. 4. Interconnection used in the WR7ABQ autopatch.

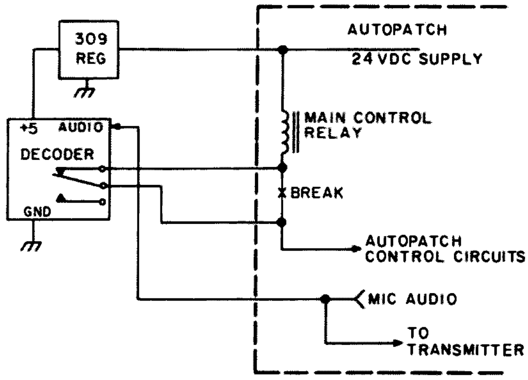

Fig. 5. Alternate interconnection using a relay having normally closed contacts.

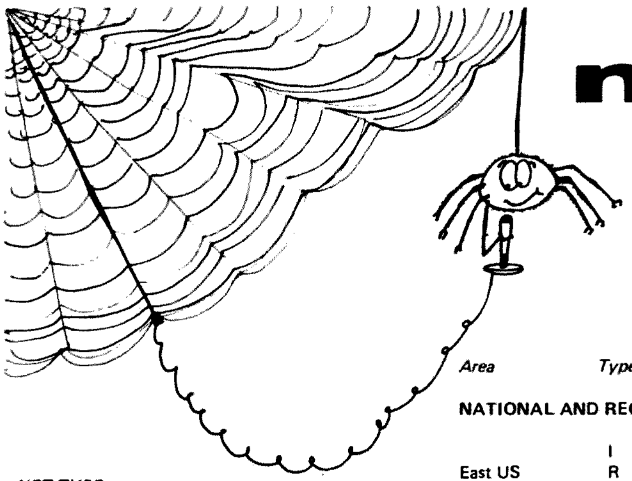

networks

E.H. Barnett WB0IIX
Route 1
Ashland, Missouri 65010

NOTE: Times and Days are given in GMT.

Area	*Type*	*Name*	*Time*	*Days*	*Freq*
NATIONAL AND REGIONAL					
	I	Liberty Net	0300	Thurs	3995
East US	R	Old Goats Net	1200	Daily	7210
	T	Continental Traffic Net	1730	Daily	14315
STATEWIDE					
GA	T	Georgia Side Band Net	0000	Daily	3975
MO	R	Missouri Mules	1330	Daily	3963
SD	I	South Dakota Wx Net	1400	Daily	3961
WA	T	Noon Time Net	1830	Daily	3970
OH	S	Ohio Slow Net	2210	Daily	3577
OK	T	Sooner Traffic Net	2230	M–S	3850
VE3	S	Quebec Net	2245	Daily	3535
MI	I	MI AREC Net	2300	Sun	3932
VE3	T	Laurentian Net	2345	M–S	3755
LOCAL					
	T	Kent County AREC	0100	Sun	146.16/.76
	T	Orange County AREC Net	0230	Tues	146.19/.79

NET TYPE

I – Information
R – Rag Chew
S – Service
T – Traffic

You can only get out of amateur radio what you are willing to give. Check into a net. You will make new friends who will be there when you need them! (Ever tried to raise a tower by yourself??) If you don't want to wait for a long roll call, most nets have a "Short Timer's" check-in before roll call. My thanks to WB8ESK for contributing to this month's column. If you check into a net, drop me a card and tell me about it.

by
Tom Gibson W3EAG
RD 1 Evansburg Road
Collegeville PA 19426

Repeaters in Paradise

Visitors from Capt. Cook (who discovered the islands) to James Michener have all agreed that paradise is that group of islands centered at approximately 20 degrees north latitude and 158 degrees west longitude. The Hawaiian Islands – now the State of Hawaii – certainly qualify as paradise if such can exist on this earth. Now, the Emergency Amateur Radio Club of Hawaii has constructed a "heavenly" system of two meter repeaters to add to the other attractions of this famous, historic and beautiful place.

I spent the last two weeks of June vacationing on the island of Oahu at Waikiki Beach, and having heard that two meter repeaters were available in the fiftieth state, I took my trusty TR-22 along. Much to my surprise I was able to work from Kauai to Hawaii Island from Waikiki by accessing the Diamond Head repeater.

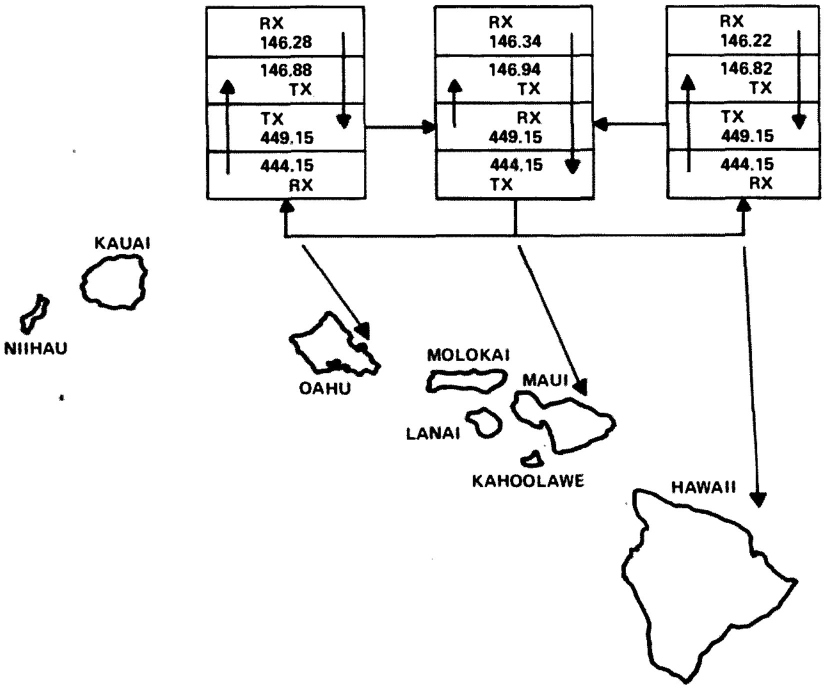

Fig. 1. Repeater link interconnection.

The secret of the Hawaiian system is a series of 450 MHz links which interconnect the repeaters on Oahu, Maui and Hawaii islands. This means that a station accessing the major repeater on his particular island is also able to access the major repeaters on the other two islands via 450 links, simultaneously. The interconnection scheme is shown in Fig. 1.

The Diamond Head repeater operates from the crater rim of that famous landmark on a frequency pair of 146.28/146.88 MHz. This is the major repeater for the island of Oahu and is linked to the other islands by the 450 MHz links previously mentioned. There is also a local repeater operating at 146.16/146.76 MHz at the University of Hawaii Manoa Campus but this may be discontinued due to lack of activity. We could hope not as it is a very nice repeater and easily accessible from the Waikiki area. There is another local repeater on the western side of Oahu at Ewa which operates on 146.19/146.79 MHz. This repeater is not easily accessed from Waikiki with a handie-talkie, but there are plans to move it to a much higher point in the Waianae mountains approximately 4000 feet above sea level. This should improve access considerably.

The major repeater on the island of Maui is located on an extinct volcano, Haleakala, at 10,000 feet above sea level. Haleakala means "house of the sun" and with that kind of elevation we won't argue the point. The frequency pair for the Haleakala repeater is 146.34/146.94 MHz. The location is so good that it provides an input for base stations on Kauai some 200 miles away. I was able to access it with the handie-talkie from a twelfth floor balcony on Waikiki beach, a distance of a little more than a hundred miles.

The "Big Island" of Hawaii is the site of a 146.22/146.82 MHz repeater.

This is located on Mauna Loa, an active volcano, at approximately 8,000 feet MSL. This is the only two meter repeater operating from an active volcano (it has erupted since my visit), and probably holds a DX record for access as well having been worked from the west coast during a band opening — a distance of some 3000 miles. There is a local repeater at Hilo using 146.16/146.76 MHz for operation.

At present, there is no repeater on the island of Kauai, but plans are being made for a 146.04/146.64 MHz machine there to link with the other islands, and a local repeater on 146.13/146.73 MHz according to John KH6BFU at Hanamaulu, Kauai.

It is interesting to note that the ancient and honorable tradition of calling CQ is being preserved in Hawaii. Whereas mainland operators routinely say "monitoring 76" or "listening 88" to indicate their availability for a call, you will still hear "KH6 - - - calling CQ Diamond Head," etc. Some KH6 stations have switched to the mainland type operation, but many still call CQ, so don't be afraid to do likewise.

In spite of the re-transmission necessary to achieve linking, the audio quality is good. During my stay there the operation was consistent and reliable. It was a real thrill to sit on Waikiki Beach and yak with a fellow ham at Kona about 175 miles away using a handie-talkie. And what a fantastic communications resource in the event of an emergency! The fiftieth state should be proud of its hams.

We would like to credit KH6GBX, KH6GRQ, KH6FNB, KH6BFU and numerous others for information, consideration and abundance of the "aloha spirit" during our visit to Hawaii. ■

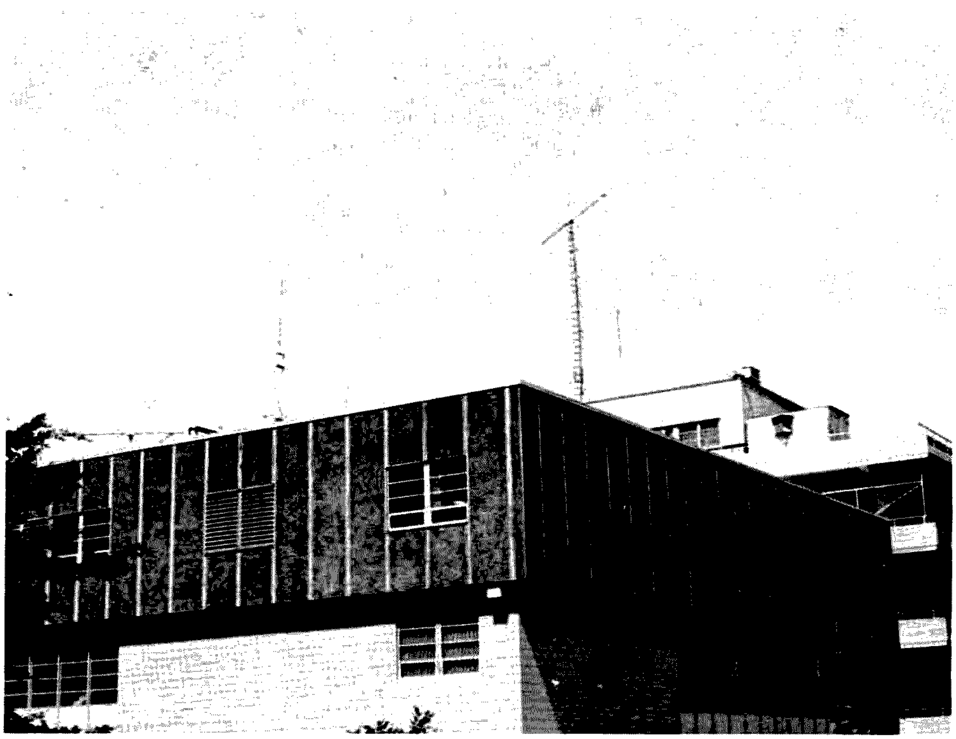

Shown above is the Hawaii Institute of Geophysics Building at the University of Hawaii Manoa Campus on the island of Oahu. KH6FOX operates the 16/76 repeater from this location as well as a variety of other ham gear.

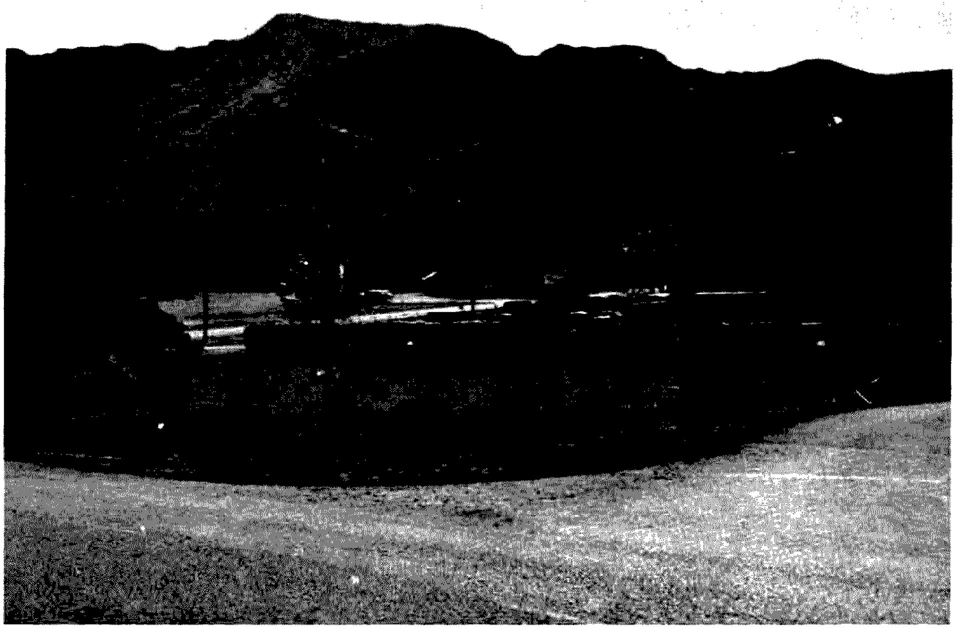

This scene is inside the crater of Diamond Head looking toward the south. The 28/88 repeater antenna is located on the opposite rim of the crater.

Simple New TT Decoder

by
William J. Hosking W7JSW
8626 E. Clarendon
Scottsdale AZ 85251

I recently had need of a simple and compact single function control circuit. I wanted it to fit in most commercial or amateur transceivers and decode two numbers from a Ma Bell tone pad. The 567 decoder fit the bill but I didn't need the full seven tones. Three tones would give me the two numbers I wanted.

Connection of the basic 567 tone decoders is right out of the Signetics Data Book. Three of the decoders are used to decode two Touchtone digits. The values shown in the schematic will allow each of the decoders to be tuned over the entire tone signaling range. With this range the decoder can be set to recognize any two numerals in a given row or column on the tone keyboard. In my particular case, I have one set to turn on with a "*" and off with a "#", and another set for "1" ON and "*" OFF.

Circuit

The circuit is shown in Fig. 1. The audio input to the decoder should not exceed about 200 mV. R1, 2 and 3 in conjunction

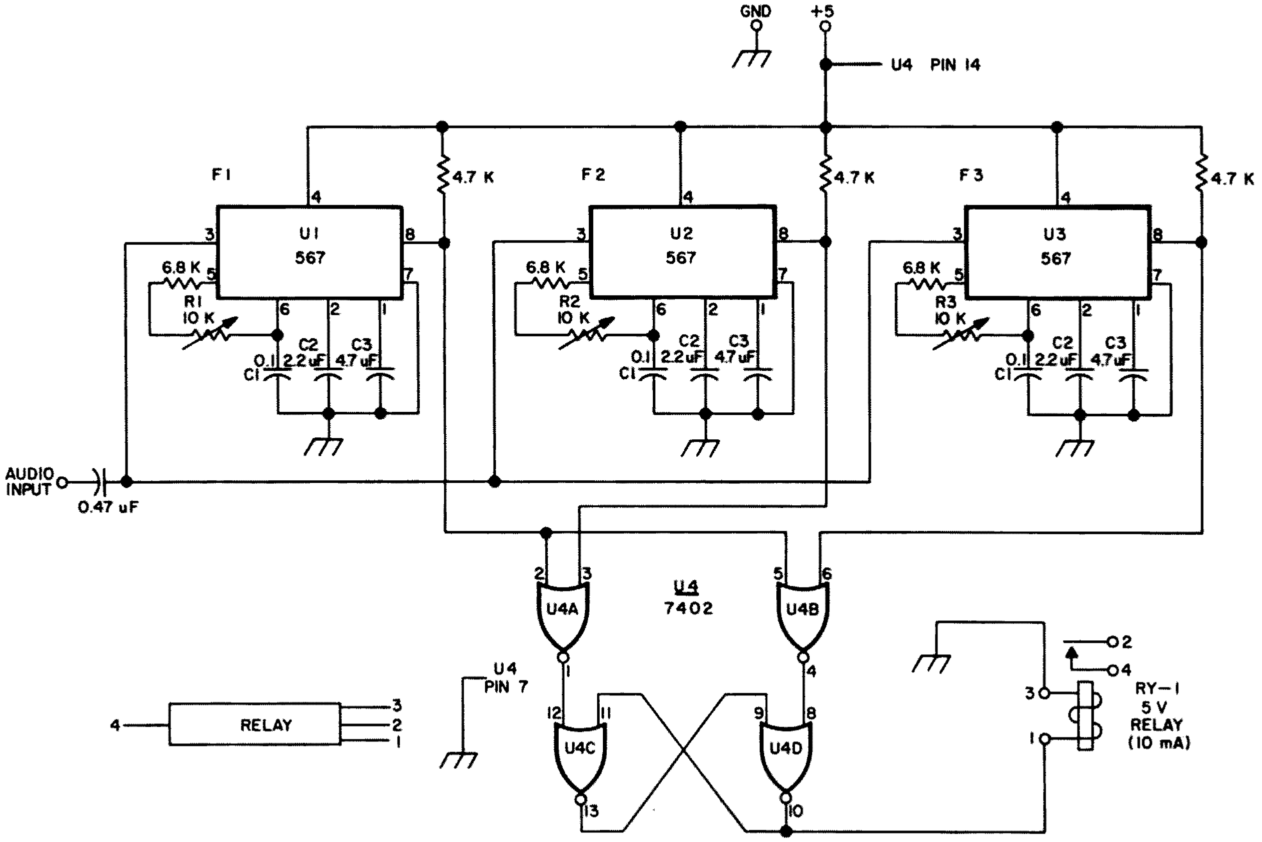

Fig. 1. The complete circuit for the function decoder. F1, F2 and F3 are the required tone frequencies for the desired control numbers. RY-1 on mine is an Electronics Applications Company IA5AH but any 5 volt SPST Reed relay will work.

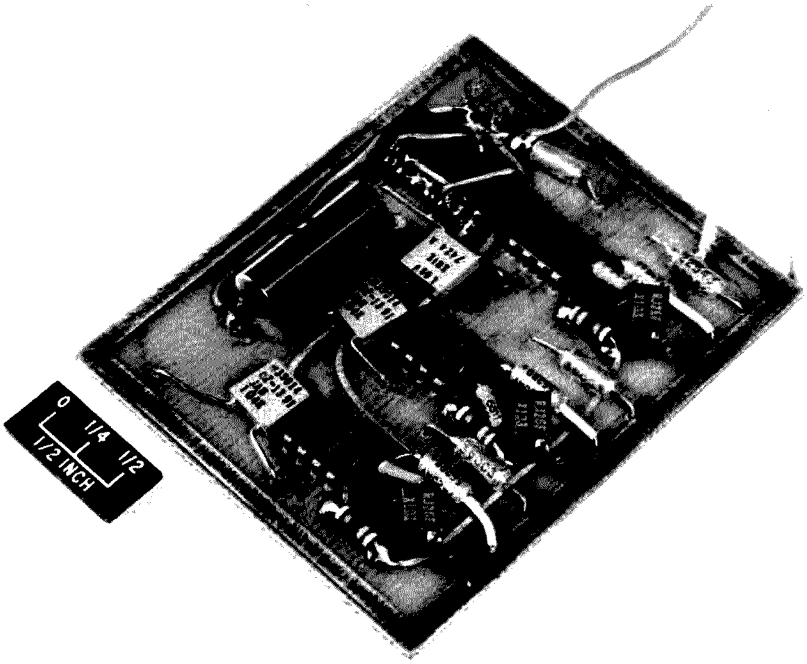

An assembled prototype circuit board. The board is approximately 2½" x 3".

with C1 set the frequencies of their respective 567 decoders. With the values shown the variable resistor will tune the 567s over a range from about 550 Hz to 1500 Hz. C2 is the loop low pass filter and controls the detection bandwidth. I used the 2.2 uF value specified in the application notes and found it works fine. C3 affects the turn-on time and jitter on the output switch. With the value given in the data book I experienced considerable leading edge bounce on the 567 output. Increasing C2 to around 4 to 6 uF cut down the bounce without slowing down the turn-on too much. The output of U1 goes to both decoding gates and this IC sets the common row or column frequency for the two numbers desired. The outputs of U2 and U3 go to U4A and U4B respectively. These 567s are tuned to the frequencies of the second tone required for each numeral. The outputs of U4A and U4B set and reset a latch made up of U4C and U4D. The output of U4D drives a 5 volt low current relay directly.

Adjustment

A frequency counter or accurately calibrated scope is required to adjust the decoder. A chart of the tones is shown in Fig. 2. When the desired numerals have been selected from a single row or column (i.e., 1 and *) then tune U1 to the common tone frequency (i.e., 1209 Hz). This is done by connecting the counter to pin 5 of U1 and adjusting R1 until the desired frequency is read.

In the same manner adjust U2 and U3 to the second tone frequencies for the two numbers desired (i.e., U2 to 697 Hz and U3 to 941 Hz).

Now with a tone pad connected to the audio input and the level set to about 100 mV the relay should turn on and off with the correct tones. With the example I gave, the relay should turn on with a "1" and off with a "*".

Hz	1209	1336	1477
697	1	2	3
770	4	5	6
852	7	8	9
941	*	0	#

Fig. 2. The standard tone frequencies for tone dial systems.

Conclusion

A photo of the completed decoder in its prototype stage is included. The circuit fits my requirements and also fits inside my 450 base station. The board is approximately 2½" x 3". A local group CONTACT, INC., 35 W. Fairmont Dr., Tempe AZ 85281, has etched and drilled PC boards available for the decoder with latch and relay for $5.50. They also sell the decoder wired, tested and tuned to your desired numbers. I have several of these decoders in use in various places and find them quite useful. ■

One IC Tone Burster

by
Lhary Meyer WB6ZUA
Box 379
Fairfax CA 94930

*Fig. 1. R1:15 or 20 turn linear 10k trimmer (Amphenol 3805, etc.). *Cermet or wirewound resistors.*

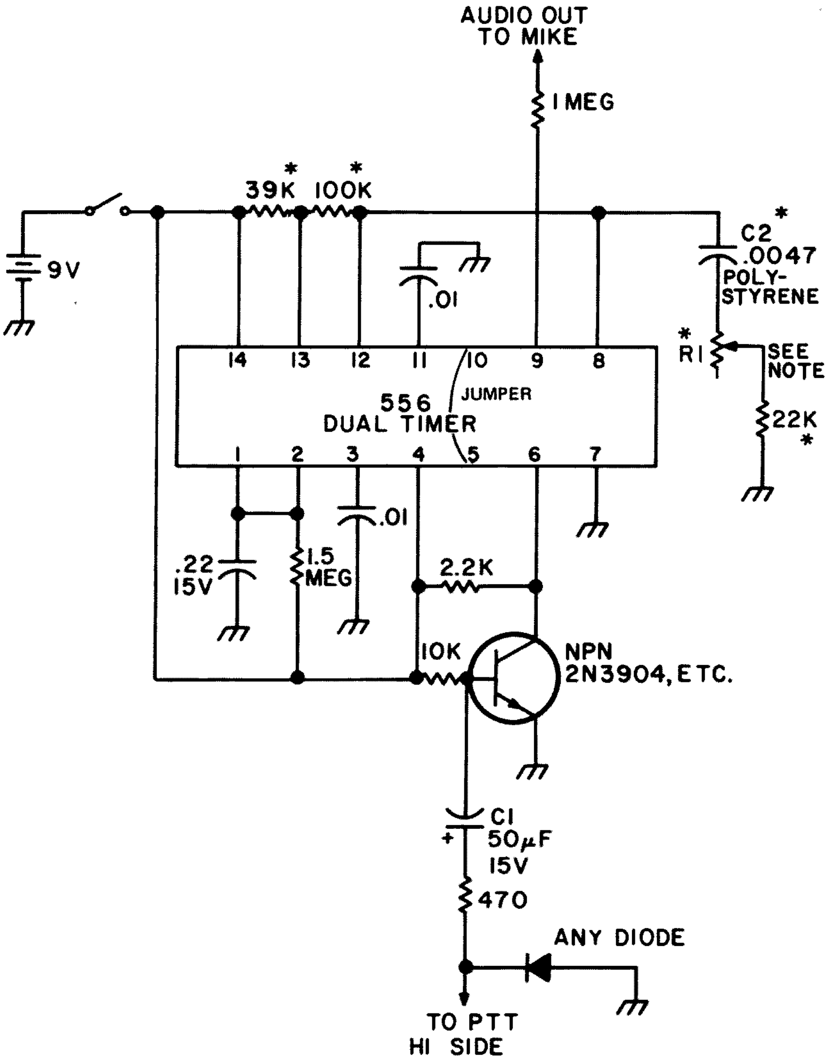

Needing an 1800 Hz tone burst to access a local repeater, I turned to my faithful junk box. The most likely prospect was a 556 IC dual timer that I got as a free sample from a manufacturer (a great way to get 1 or 2 pieces of a part free, especially if you have a letterhead).

The first half of the IC is used as a monostable with an on time of about 400 ms. The second half is a free running oscillator which is disabled via the low output of timer #1. The NPN transistor amplifies the negative going pulse from C1 to start the cycle when it discharges to ground.

The only part that is not common is the 15 or 20 turn trimmer pot. These run about \$2.50 new from Allied and allow a smooth, stable frequency setting. They produce about a 30 Hz per turn tuning and have a low tempco.

The input voltage and the temperature have little effect on the frequency, but if your repeater has a narrow window the parts should be cermet or wirewound resistors and a polystyrene capacitor. The power for the circuit is not critical. I use a 9 V battery, but 12 V is fine. The trigger input requires +12 V.

Mine is mounted in a small minibox with a male and female mike connector on opposite sides. I included a power switch and with only 11 mA drawn, the batteries last a long time. A switch and a few more pots would give various tones if you need them. ■

The Tuna-Two Traveler

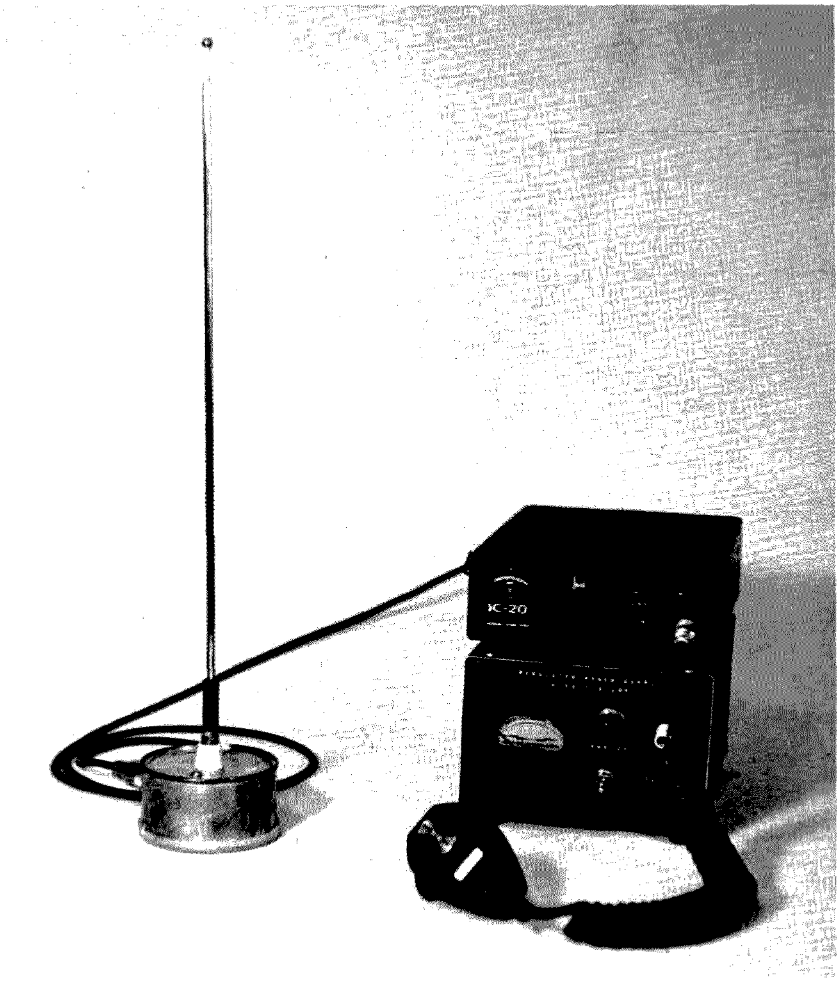

by
Edward R. Spadoni W1RHN
91 Tower Street
Dedham MA 02026

Are you using your 2 meter FM mobile transceiver with battery or ac power supply at the home QTH? Want to move it temporarily away from its present location to the den, without having to reroute the outside antenna? You may want to try it in the living room or bedroom when you're ill or want to be super comfortable, or on the porch or patio on a nice Sunday afternoon. Operate from your motel room after a long drive, whether vacationing or on a business trip. The portable antenna to be described will also give you freedom to find a comfortable spot to operate the rig and still allow you to locate the antenna for best results.

Description

The antenna described here has been used at all of the above-mentioned places, with surprising results. The design and construction was due to the desire for a small, quick to assemble, easy to move around (i.e., looking for a hot spot in a room) type antenna, that can be remotely located from the rig, limited only by the transmission line used. The radiation resistance of a ¼ λ antenna is in the order of 20-30 Ohms under favorable conditions. Most 2 meter FM transceivers want to see approximately 50 Ohms for a load. To help the antenna meet this requirement I introduced a ¼ λ,

RG-58U (53 Ohms) matching section. The transmission line between the transceiver and the antenna can be any reasonable length of RG-59U (73 Ohms) TV type coaxial cable.

Construction

Obtain a tuna fish can or equivalent (approximately 7 ounces), wash well, remove label and drill holes (see Fig. 1). Because the metal is on the thin side, be careful of sharp edges and burrs. Use a 5/8 inch (16 mm) Greenlee punch to make the mounting hole for the coaxial connector. Any telescoping section that will extend between 16 (40 cm) through 25 (63 cm) inches will work. The telescoping section that I used came from an old set of TV rabbit ears. A coupler is needed that becomes part of the telescoping section and is screwed onto the threaded stud of the insulated feedthrough. The coupler was made from 3/8 inch (9.5 mm) diameter aluminum rod. One end is drilled to accept the telescoping section. The other end is drilled and threaded to match the stud on the feedthrough insulator used (see Fig. 2).

Assembly

Most parts came from the junk box, others from the local radio-TV parts store (see Fig. 3 for assembly, and parts list). A replacement CB walkie-talkie antenna from the Radio Shack, catalog no. 21-1156, can be used for the telescoping section. Install the feedthrough insulator onto the can as shown, then the S0-239 coaxial connector with ground lug and associated hardware. The hardware used was 4-40 thread by 5/16 inch (7.9 mm) long screws with lockwashers and hex nuts. Next, make the matching section from RG-58U cable (see Fig. 3). Shape into a coil that will fit inside the can and tape at several places (see photo). Now install inside the can and solder ends of cable to the lugs and coaxial connector. I found a plastic cover of the right size that will fit over the bottom of the can to prevent scratching of furniture, etc. It came with a can of peanuts, a well-known brand and found in most supermarkets.

Final Comments

The transceiver used with the antenna is an Icom IC-20 with approximately 10 Watts output. After attaching the antenna to the rig, I placed the antenna on the hutch in the den, extended the telescoping section to about 19 inches (48 cm) and fired up the rig. The IC-20 has a relative power output meter with a mark that lets you know if you're in the ball park for a 50 Ohm match (this was checked using a known load). The meter indicated that there was a mismatch. By adjusting the length of the antenna, I was able to bring the meter within the proper range. I then tried the antenna on the window sill; this did cause the match to change, but again with a little adjustment

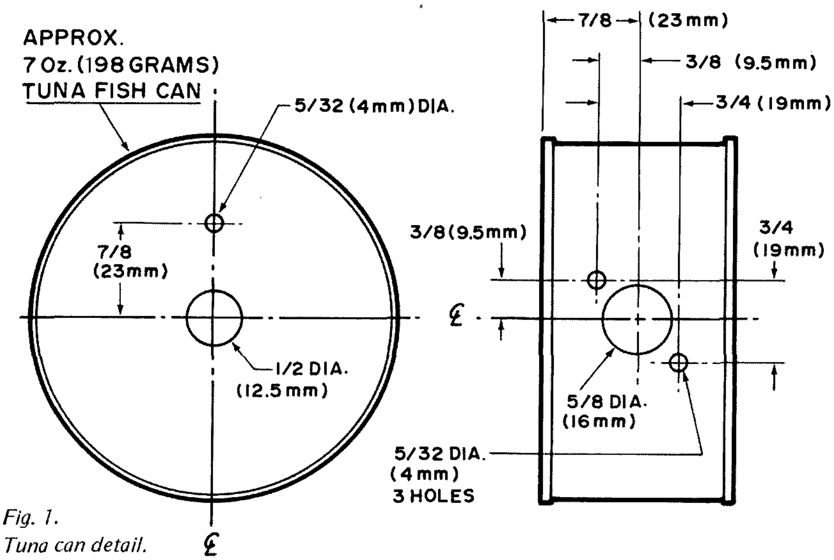

Fig. 1. Tuna can detail.

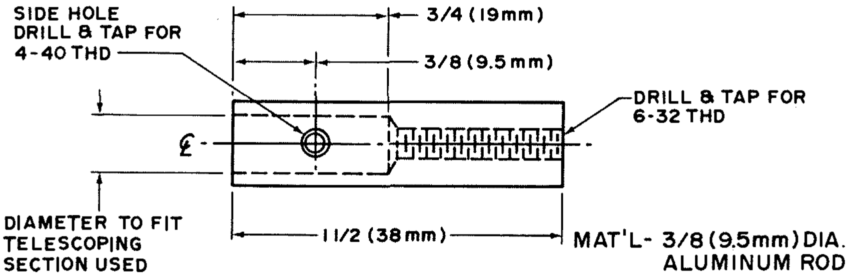

Fig. 2. Coupler.

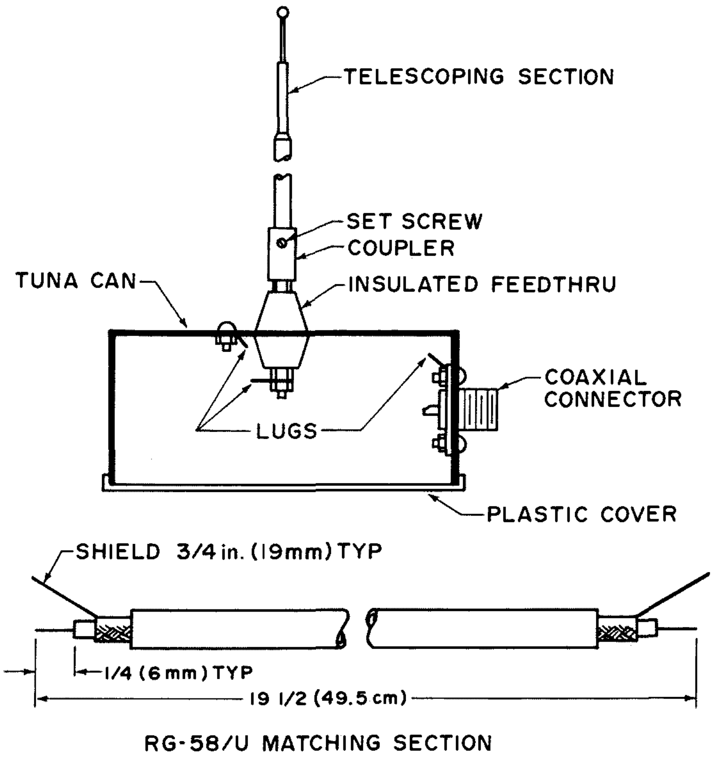

Fig. 3. Assembly. Center conductor is soldered to feedthrough lug and coax connector center.

and watching the meter, the mark was reached. I want to note that when the antenna was not operating at optimum setting, repeater and simplex contacts were being made with good results, indicating that it is not a critical adjustment. Most transceivers today have their output transistor stage protected against antenna troubles that may develop (check owner's manual). I connected a Heathkit VHF swr meter into the circuit with the antenna located on the window sill and found that from 146 through 147.69 MHz the swr was less than 1.5:1. With the antenna located on the sill I have been able to work through 5 repeaters in and around the Boston area including Derry, New Hampshire (WR1ABQ rpt.) located about 50 miles away. QSOs up to 25 miles have been made via simplex. This antenna is a good evening or weekend project. Its low cost and ease of assembly will make it worth your while to use or have available if needed. ■

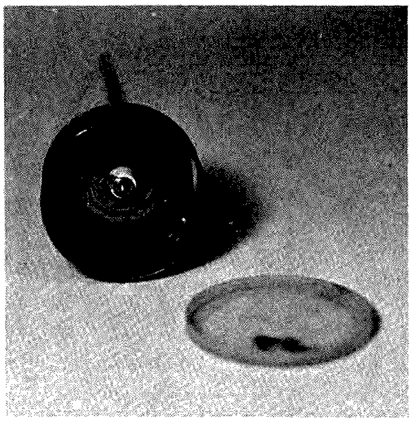

Parts List

QTY	Description
1	Tuna can (refer to Fig. 1)
1	Feedthrough insulator – E.F. Johnson, cat. no. 135-50 (or equivalent)
1	Coaxial connector, type SO-239
1	Telescoping section (refer to text)
3	No. 4 – ground lugs
1	Plastic cover (refer to text)
1	Coupler (refer to Fig. 2)
1	Set screw (4-40 x 1/8" long)

The Mighty TR-22/15

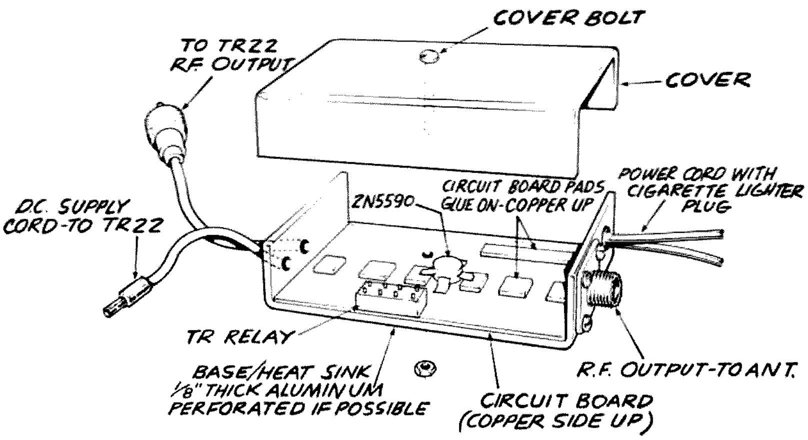

Fig. 1.

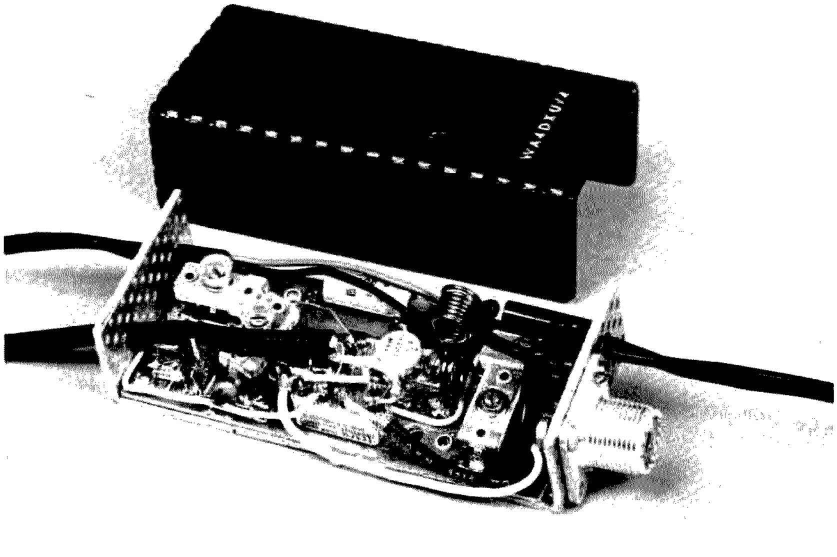

by
Walter W. Pinner WB4MYL
7304 Lorenzo Lane
Louisville KY 40228

Want to add a little more power to your TR22??? Want to make this power package small enough to fit into the microphone pocket??? Want to make the circuit board with tin snips and glue??? YES? Read on . . .

The little amplifier I'll describe is easily constructed, will deliver 15 Watts output with 1 Watt input and can be built for less than $10.00.

The amp fits into the mike pocket of the TR22C nicely and incorporates a dc power plug for the radio. A small 1 inch slit in the mike pocket bottom allows the dc plug and rf input plug to go directly to the sockets on the bottom of the transceiver. The top of the amp has the antenna socket and dc input cable fitted with a cigarette plug. This arrangement provides easy hookup to your car, boat, motorcycle or ??? and when used mobile, both the TR22 and the amp are powered by the external source.

Fig. 1 shows the mechanical construction. An aluminum bottom/heat sink is formed as shown. A piece of copper clad board is pop-riveted or bolted to the bottom cover, copper side up. An aluminum top is formed and secured to the finished amp with a single through bolt. The circuit board is made by cutting copper clad pads with tin snips and gluing with one drop super glue or epoxy as shown in the full size layout in Fig. 2. Fig. 2 also shows the parts placement. All leads

should be cut to the minimum needed length including the compression trimmer caps. Fig. 3 shows the schematic and parts list. The rf transistor has been advertised in *73* at $6.00. Heat sink paste should be used when mounting this transistor and don't get too strong when tightening the mounting nut. Tuneup is simply a matter of connecting the amp to a dummy load or antenna through an output indicator, apply drive and tune C1, C2, C3, C4, in that order for maximum rf output. These adjustments will interact; therefore, the procedure should be repeated several times until no further increase in output can be obtained.

Several units constructed all produced 15 plus Watts out and provided that little extra power needed when you decide to throw the TR22 on the seat next to you and go mobile.

I want to thank Roy WA4DXU for the use of his rig for photography. Mine wasn't painted pretty. ■

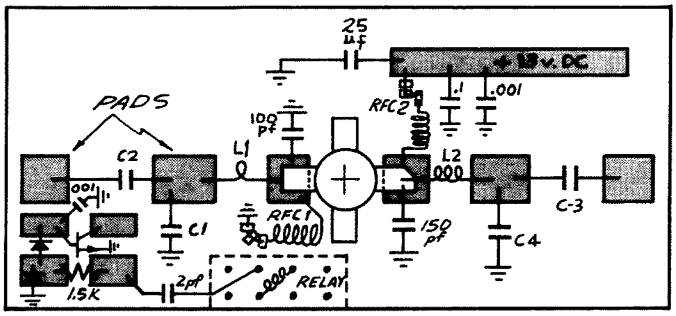

Fig. 2.

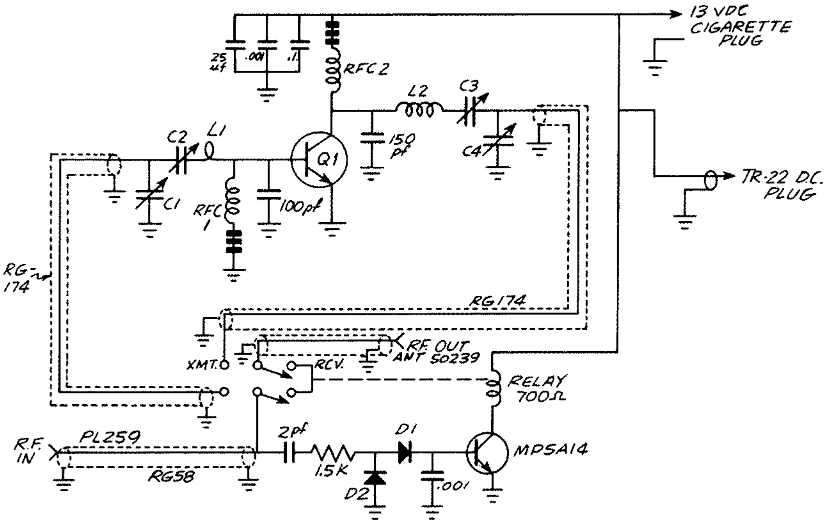

Fig. 3. Schematic. Q1 — 2N5590 or 2N6081; L1 — 1 turn #18 wire 8 mm dia.; L2 — 3 turns #18 wire 8 mm dia.; RFC 1 & 2 — 8 turns #18 wire 8 mm dia. with 3 ferrite beads on the cold end; Relay — 2P2T sigma ½ xtal can 12 V dc or similar (Poly Paks #92CU1743, 12 for $1.00, 26 V dc 700 Ohm, work on 12 V dc or higher); C1, C4 — 15 to 150 pF (Poly Paks #92CU1979, assortment 20 for $1.00); D1, D2 — 1N914.

by
F. E. Hinkle WA5KPG
W. T. Adams WA5QZM
9503 Gambel's Quail Tr.
Austin TX 78758

Inexpensive HF-VHF Frequency Standard

There have been many frequency standard articles published in recent years using advanced technology integrated circuits[1,2]. However, there is a need for a foolproof circuit that is both inexpensive and easy to build in a modest workshop. While looking for a frequency standard for HF operations I noticed that most authors neglect the need for 30 kHz and 300 kHz markers in VHF FM operations, where 30 kHz is the standard channel spacing. Also, most 2m FM frequency standards neglect the needed 100 kHz and 10 kHz markers as used by the HF man.[2] This is why my interest developed for a simple design frequency standard which could develop both 30 kHz and 10 kHz markers as well as a host of other frequencies.

This standard uses readily available TTL integrated circuits which are available from many sources as advertised in the back of *73 Magazine*. The integrated circuits should not cost more than $4.50 total. The crystal I used was one from my junk box, but an International EX Crystal should work as well, and costs $4.95.

The block diagram of the frequency standard is shown in Fig. 1. Note that a five volt regulator was used to furnish the 5 volts needed by the TTL circuits. By using a regulator, an automobile 12 volt battery can be used to power the frequency standard when tuning up the mobile rig in the car. Also, a lantern battery may be used to power the unit for portable use as on field day. The 9 MHz oscillator is composed of a hex inverter operating in the linear mode. The 9 MHz output from the oscillator is divided by three to generate the 3 MHz signal used by the rest of the circuit. Two divide-by-ten circuits are then used to generate the 300 kHz and 30 kHz marker outputs. When 100 kHz outputs are required, another divide-by-three circuit is inserted between the 3 MHz signal and the divide-by-tens. Since there are two different outputs on each BNC connector, a small LED is used to signal when the second divide-by-three is in the circuit. The LED monitors the output of the divide-by-three, and when it is outputting, the LED is illuminated corresponding to 1 MHz, 100 kHz or 10 kHz selections. When the LED is not illuminated, then the outputs are 3 MHz, 300 kHz or 30 kHz.

The circuit diagram of the frequency standard is shown in Fig. 2. A 7404 TTL hex inverter is used as the crystal oscillator. A small 2-8 pF trimmer capacitor is used to permit zeroing the crystal with WWV. A 7476 TTL dual J-K flip flop is connected in a standard divide-by-three configuration. This same circuit is used later as the divide-by-three in order to produce the 100 kHz markers. A toggle switch selects either the second divide-by-three or bypasses it depending whether 100 kHz markers are needed. Two 7490 TTL decade dividers are then used to furnish the lower frequency markers.

The TTL circuit layout is not critical. The standard, however, should be built close together to keep down stray capacitances. To help those who wish to duplicate the circuit, circuit boards are being made available.[3] Alternatively, the circuit may be built on a small vector board. Sockets may be used to help in the point-to-point wiring.

The board was mounted in a small aluminum box and BNC connectors were used for the outputs. The frequency standard is quite readable at 150 MHz and probably higher. Because of the square wave output, the harmonic content is very high. To calibrate the oscillator, the 100 kHz mode is chosen. The 100 kHz is then compared with WWV at 5, 10 or 15 MHz. The small trimmer capacitor is then adjusted until a zero beat is noted. Using this method, the harmonics at 146 MHz should be no more than a few Hz off. ■

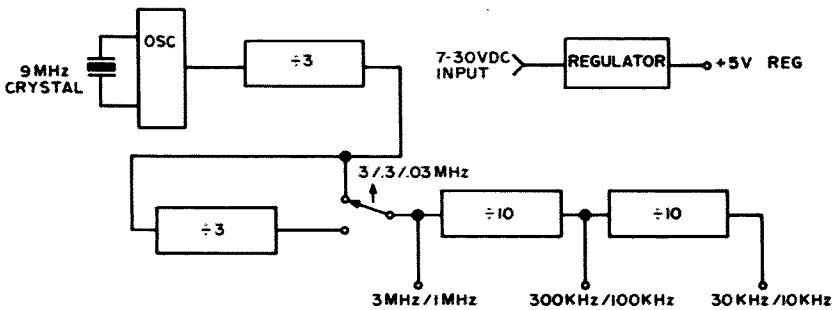

Fig. 1. Block diagram of the frequency standard. Selection of the 1 MHz/.1 MHz/.01 MHz is made by the toggle switch.

References

[1] K. W. Robbins, "All Band Frequency Marker," *73*, June 1975, p. 88-90.

[2] "Frequency Standards," *FM and Repeaters*, ARRL 1972, p. 166-168.

[3] Printed circuit boards are available from I/O Engineering, 9503 Gambel's Quail Tr., Austin TX 78758. Undrilled, 2x4 inch is $3.75; drilled is $4.75 postpaid.

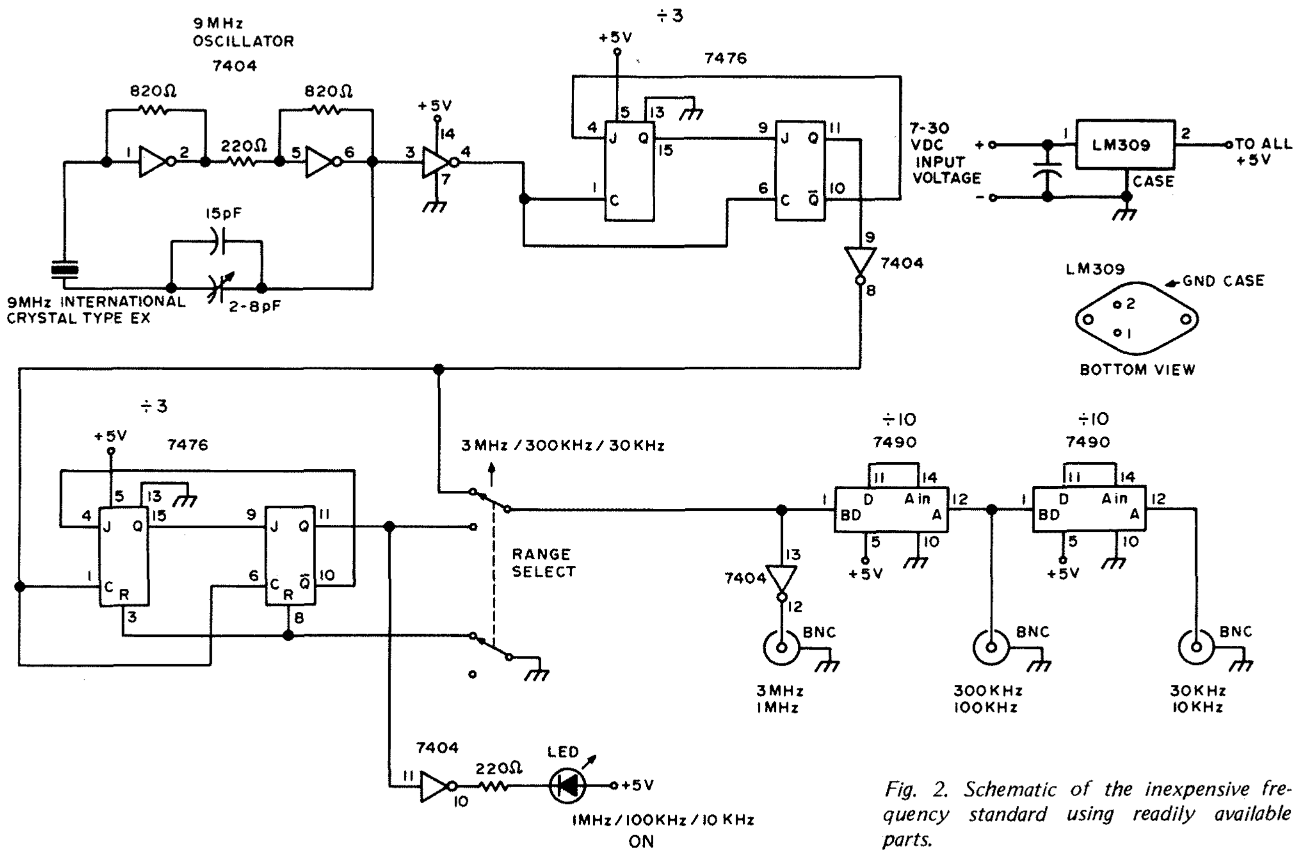

Fig. 2. Schematic of the inexpensive frequency standard using readily available parts.

HAM HELP

Please put my name and the names of the organizations I represent on the list of available and eager ham radio teachers.

Steve Gold WB8OJF
Pres., Beachwood A. R. C.
Secy., South East A. R. C.
23881 Bryden Road
Beachwood OH 44122

I would appreciate knowing of anyone in my area who would be interested in helping me on the road to becoming a VE3.

Tim Molyneux
31 Grass Point Cres.
Etobicoke
Ontario M9C-2T9

Would be glad to help any prospective or present ham to get his license or upgrade.

Barry Anderson K3SUI
5114 Darlington Rd.
York PA 17404
(717)-792-0828

Help.

Richard K. Burrows
1335 Faxon Circle
Williamsport PA 17701

Does anyone out there know where I can get a set of schematics for two pieces of equipment I have and can't get running? One is a Motorola Dispatcher, transistorized, model no. D.33BAT-1104A, xmtr. type CC3501, 6 volt.

The tough one came from the MARS program. It's a signal generator that looks like a very good model, but, as with all MARS equipment, it only half works. Though new, it looks like some one has taken the rippers to it and I don't want to get into it unless I have documentation. I'm willing to pay, if need be. It's a SG 47/USM-16, made by B. J. Electronics Div. of Borg Warner, Santa Anna CA. It has modulation, deviation, pulse and rf output 10 to 440 MHz. I have written to the above address but not received an answer. I understand that there are four books for this set, but I couldn't get them from the military. Any help out there?

Donald F. Kelso WA8YFO/4
6233 Pinewood Village
Circle West
Lakeland FL 33803

CORRECTION

"Build This $5 Timer," January, 1976, page 129: Five pin numbers from the NE555 were inadvertently omitted. Clockwise from the top, they should be 8, 3, 4, 2, 1, 7, 6. Our apologies.

by Wayne Green W2NSD/1

I/O EDITORIAL

COMPUTERS, SIMPLIFIED

The main part of the I/O section of *73* this month is taken up by a reprint of Nat Wadsworth's explanation of the basics of computers, originally published in the Scelbi-8B User's Manual. It is hoped that this article will dispel once and forever the idea that computers are something mysterious and incredibly difficult to understand.

Computers are complicated, but the basic parts of them are not difficult to get to know, and from there on it is a matter of a whole lot of the same thing over and over, so the complication is one of quantity.

For many ham applications of computers you can think of them as being an almost endless switchboard which can be operated by means of a keyboard rather than individual switches or the soldering of wires. Take a repeater, for instance. Right now repeater nuts have to wire in a time delay for the squelch tale, another for the three minute time out, an ID generator, another timer to play the ID at desired times, an autopatch decoder, and so forth. With a microcomputer, said nut can do all of that with a program. And if he wants to change the length of time for the squelch tale he can go on the air, access the repeater control computer and change it. Ditto the three minute timer . . . perhaps he'd like to shorten the drop out time to two minutes during drive time . . . no strain. The uP will turn on the cassette recorder during autopatches, etc. It is an almost infinitely flexible way of simulating a lot of electronic circuits. Now do you understand what all the fuss is about?

Amateurs have, for the most part, a decided advantage over most of the people who are already into computers. Most of these people are into the programming end of things and it just happens that programming is a lot easier to learn than electronics. We can learn programming quickly, but they will have a long hard row to hoe trying to catch up with us on the digital electronics end.

Well, perhaps you have no great interest in founding a multi-million dollar firm in microcomputers . . . no interest in grabbing a piece of the big computer pie in the sky which is coming. The estimated ham purchases of computers and accessories for this year is only about $50 million . . . let's see now, if we only get 2% of that market that is $1 million in sales. Hmmm. And once a few more people get hold of the Digital Equipment book on computer games the computer hobby market could explode. Fortunately DEC has managed to keep this book a tightly held secret . . . otherwise all hell might break loose. 101 utterly fascinating computer games and the programs to get them running all in one $7.50 book . . . fantastic.

With home use, hobby use, ham use, and business use, computers will be everywhere in a few years. Offices will use the same computer for bookkeeping, invoicing, writing letters (watch out IBM, your $850 Selectric typewriters are about to be made obsolete), inventory, addressing, payroll, indexing, and anything else that now uses paper, pencil, typewriter, etc. Your friendly local computer store will sell, program and service said ubiquitous computers. It is not often that we can see a multi-billion dollar market about to open up and decide whether we want to grab the shirttails or not.

CHU DIGITAL TIME

CHU, the Canadian Observatory station, has added a digital time function to its transmissions. This time tick uses the standard modem tones of 2025 and 2225 Hz and is sent during the 30-39th seconds of each minute. Who will be the first to come up with an article on using this time standard for a ham shack clock or computer application?

The time code is a modified ASCII at 300 baud. During the first 500 ms of each of the 30th to 39th seconds, CHU sends first 10 cycles of 1 kHz (bringing us up to 0.01 seconds . . . 10 ms), then 125 ms of 2225 Hz. This is followed by two bursts of the time code (182.5 ms each). If the two time bursts are not identical the pulses should be ignored.

The time bursts are made up of five 8-bit characters, each containing two decimal numbers (BCD), for a total of ten digits in the pulse. The first digit must be a six as this will prevent inversion of the code. The next three indicate the day of the year, then two for the hour of the day, two for the minute, and two for the second. 2025 Hz is level 1 and 2225 Hz is level 0.

Gearing up to use these digital time clicks is a fine project for you digital home brewers.

SOME PUBLICATIONS OF POSSIBLE INTEREST

by
Wayne Green W2NSD/1
and
Fred R. Goldstein WA1WDS

PCC — People's Computer Company, Box 310, Menlo Park CA 94025. This is a tabloid newspaper bi-monthly . . . $5 for six issues, $9 for two years . . . ran 32 pages in the latest issue. PCC is a mixture of chitchat, news of computers in the schools, game programs, news of products and services . . . emphasis is school computer use. Delightful. PCC has just announced a couple of new publications, TINY BASIC at three issues for $3, a newsletter on Tiny Basic, a new program language for tiny kids so they can write games, do math recreations and operate relays and other real time stuff. The other new publication is a series of booklets on Computers in the Classroom. Book 1, 60 pages Xeroxed, is $3.

Computer Hobbyist, Box 295, Cary NC 27511. $6 a year. This is an advanced type of newsletter and a major source for info from Hal Chamberlin, one of the leading computer hobbyist circuit designers. This is a little heavy for rank beginners . . . a recent issue had a program for generating random numbers and a cassette recorder interface circuit. Editor Stallings is doing a fine job.

Computer Notes, MITS, 6328 Linn Ave NE, Albuquerque NM 87108. While this newsletter is designed primarily for Altair owners, and much of it is far beyond the beginner to comprehend, it is a very well done and interesting publication. Costs $30 per year.

Creative Computing, Box 789, Morristown NJ 07960 . . . $8/yr. Bi-monthly. Heavy on games, complete with programs for them . . . heavy on school use of computers.

Micro-8 Newsletter, Cabrillo Computer Center, 4350 Constellation Road, Lompoc CA 93436. $6/6 issues. Aimed at the hobbyist, particularly the hardware enthusiast and the 8008 user. Tiny type and an enormous amount of info in each issue . . . sources of info, parts, equipment, names and addresses of other hobbyists. Circuits of interest. First rate source.

Microcomputer Dictionary and Guide. Matrix, Champaign IL 61820; $15.95 postpaid. Also available from Radio Bookshop, Peterborough NH 03458.

It's a whopper . . . well over 700 pages . . . and the price is right at $15.95. The term "dictionary" is not quite accurate . . . this is more like what you might expect in an encyclopedia. The definitions of computer terms are not brief; they are almost enough for you to learn about computers just from reading the book.

In a field where there is a completely new lexicon, where it is almost impossible to read articles in computer magazines or newsletters without an interpreter, where you can't even understand the computer folk when you try and talk with them, a dictionary such as this is invaluable.

It is an unfortunate fact that virtually everyone who is deeply involved with computers and has learned the new language also seems to have forgotten English. Computer folk are unable, to a man (it would seem), to write in English or even to talk it. They no longer talk with people, they interface. Without a lot

Continued on page 94

People's Computer Company

COMPUTER NOTES

creative computing

by
Nat Wadsworth
SCELBI Computer Consulting Inc.
1322 Rear Boston Post Road
Milford CT 06460

Computers Are Ridiculously Simple!

Did you just get hooked? Has the first reaction of bewilderment and perplexity set in as you begin to explore the ins and outs of computing? Nat Wadsworth of SCELBI Computer Consulting – makers of an Intel 8008 based packaged microcomputer system – provides us with this article on fundamentals of computer operation. The article is written with the Intel 8008 in mind as an example of a typical computer, but the principles involved apply to nearly any microcomputer you can find on the market. The material of this article is taken from the first chapter of author Wadsworth's SCELBI-8H/B User's Manual, *one of the best documentation support packages among the various kit manufacturers.*

There have been numerous examples put forth over the years to illustrate the basic scheme behind the operation of computers. The scheme is deceptively simple and incredibly powerful. The power comes from the speed with which the machines can perform the simple operations. The fundamental concept of the computer is that it is a machine that is capable of doing two fundamental operations at very high speed: First it is able to obtain a piece of information from a storage area and perform a function as directed by the information it obtains; and secondly, based on its current status, it is able to ascertain where to obtain the next piece of information that will give it further "directions." This fundamental concept is the key to the operation of all digital computers and while it is a simple concept, it can be built upon to arrive at all the complex operations computers of today can perform. How this is done is what this article is about.

One of the best analogies for describing a computer's basic operations is to consider a bank of boxes, similar to a bank of Post Office mail boxes. A piece of paper containing "directions" can be placed in each box. A person is directed to go to the bank of boxes, and after starting at a given place, to open each box, withdraw the piece of paper and follow the directions there-on. The boxes are labeled in an orderly fashion, and the person is also told that unless a piece of paper in a box directs otherwise, when the person is finished performing the task directed, they are to replace the paper in the box and proceed to open the next box. Note, however, that a piece of paper may give directions to alter the sequence in which the person is to open boxes.

Fig. 1 shows a picture of a set of such boxes. Each box is labeled for identification.

To present a view of a computer's operation, assume a person has been told to start at box A1 and to follow the directions contained on the pieces of paper in the boxes until a piece of paper containing the direction "stop" is found in one of the boxes. In this example the person finds the following "instructions":

In box A1 is the message: *"Take the mathematical value of 1 and write it down on a scratch pad."*

Since the "instruction" in box A1 only pertained to some function that the person was to perform, and did not direct the person to go to some specific box, then the person will simply go on to the next box in the row.

Box A2 contains the information:

"Add the number 2 to any value already present on your scratch pad."

The person will at this point perform an addition and have a total "accumulated" value on the pad of scratch paper. The accumulated value would be 3. Since there are no other directions in box A2, the operator would continue on to open box A3 which has the following message:

"Place any accumulated mathematical value you have on your scratch pad into box H8."

Thus the person would tear the current sheet off the "scratch pad" and place it – containing the value "3" – into box H8. Note, though, that while the person was directed to place the accumulated value on the scratch pad into box H8, the person was not directed to alter the sequence in which to obtain new "instructions" so the person would proceed to open box A4 which contains the directive:

"Take the mathematical value of 6 and place it on your scratch pad."

Going on to box A5 the person finds:

"Add 3 to the present value on your scratch pad."

This is obviously just a "data word." The operator adds the value 6 from the previous box to the number 3, noting the calculation on the scratch pad and proceeds to open box A6:

"Place any accumulated value you have on your scratch pad into box H7."

The person thus would put the value "9" on a piece of paper (from the scratch pad) into the designated box and proceed to open box A7:

"Get the value presently stored in box H8 and save the value on your scratch pad."

This is a simple operation and the person proceeds to open up box A8:

"Fetch the value in box H7. Subtract the value of your scratch pad from the value found in box H7. Leave the result on your scratch pad."

When the operator has performed this operation, the operator will have finished the "A" row and will then continue obtaining "instructions" by going to the "B" row and opening box B1 where more directions are found:

"If the present value on your scratch pad is not zero go to box B3."

At this time if the person checks the scratch pad it will be found that the value on the scratch pad is indeed non-zero as the last calculation performed on the scratch pad was to subtract the value in box H8 from the value in box H7. In this example that would be:

$$9 - 3 = 6$$

Therefore the directions in box B1 for this particular case will tell the operator to "jump over" box B2 and go to box B3. For the sake of completeness, however, box B2 does contain an instruction, for had the value on the scratch pad been zero the operator would not have "jumped over" box B2 and would have found the following message inside box B2:

"The values in box H7 and H8 are of equal value. STOP!"

However, for the values used in this example, the person would have "jumped" to box B3 where the following directive would be found:

"If the present value on your scratch pad is a "negative number" jump to box B5."

Since this is not currently the case the person will not "JUMP" to box B5, but will simply continue to open box B4 which contains:

"The value in box H7 is larger than the value in box H8. STOP!"

At this point the person has completed the "instruction sequence" for this example. It should be noted, however, that box B5 did contain the message:

"The value in box H7 is smaller than the value in box H8. STOP!"

This little example of a person opening up boxes and following the directions

The basic scheme behind the operation of computers is deceptively simple and incredibly powerful.

One of the best analogies for describing a computer's basic operations is to consider a bank of boxes, similar to a bank of Post Office mail boxes . . .

A1	A2	A3	A4	A5	A6	A7	A8
B1	B2	B3	B4	B5	B6	B7	B8
C1	C2	C3	C4	C5	C6	C7	C8
D1	D2	D3	D4	D5	D6	D7	D8
E1	E2	E3	E4	E5	E6	E7	E8
F1	F2	F3	F4	F5	F6	F7	F8
G1	G2	G3	G4	G5	G6	G7	G8
H1	H2	H3	H4	H5	H6	H7	H8

Fig. 1. A set of Post Office pigeon holes containing messages.

Fig. 2(a). The computer structure compared to the Post Office pigeon holes.

POST OFFICE BOXES

A1	A2	A3	A4	A5	A6	A7	A8
B1	B2	B3	B4	B5	B6	B7	B8
C1	C2	C3	C4	C5	C6	C7	C8
D1	D2	D3	D4	D5	D6	D7	D8
E1	E2	E3	E4	E5	E6	E7	E8
F1	F2	F3	F4	F5	F6	F7	F8
G1	G2	G3	G4	G5	G6	G7	G8
H1	H2	H3	H4	H5	H6	H7	H8

= MEMORY

PERSON

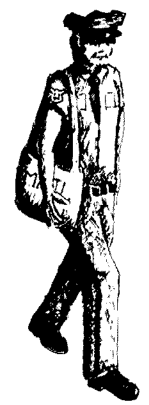

= CENTRAL PROCESSING UNIT

PAD & PENCIL

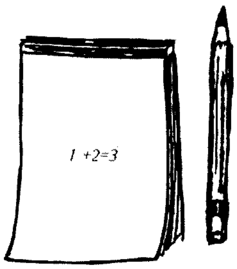

= ACCUMULATOR

contained in each one is very similar to the concept used by a computer. Note that each "instruction" is very short and specific. Also note that the combination of all the instructions in the example will result in the person being directed to solve the problem:

Is 1 + X greater than, less than, or equal to: 6 + Y?

For the reader can note, if the "data words" contained in boxes A2 and A5 for the example were changed, the sequence of "instructions" would still result in the person being told to "STOP" at the box that contained the correct answer. The reader can verify this by simply assuming that different numbers than those used in the example are in boxes A2 and A5 and going through the instruction sequence until told to "STOP."

The example illustrates how a carefully planned set of directions, arranged such that they are performed in a precise sequence, can be used to solve a problem even though the "variables" (data) in the problem may vary. Such a set of "instructions" is often termed an "algorithm" by those in the computer field. The example solved a mathematical problem using the "algorithm," but the reader will find that "algorithms" can be devised to solve many problems on a computer that are not strictly mathematical!

Any person learning a new skill must of necessity learn the vocabulary of the field in order to proceed to any great extent. You might think that it would be easier if everything was written in plain everyday words, but the truth of the matter is that specialized vocabularies do serve several useful functions. For one thing, they can greatly shorten the time that it takes to communicate ideas or concepts. In today's fast-moving world, that is of significance in itself. In addition, the limitations of the English language often result in a given word having a special meaning when it is used in the context of a particular subject. One must know the new meaning when it is used in such a manner. Fortunately, much of the computer vocabulary is very logically named. This is probably due partly to the fact that computers are of necessity extremely dependent on logic, and hence many persons who helped create the field – and by that fact were rather logically oriented themselves – seem to have had the logical sense to have named many of the parts and systems of computers and computer programs, in a logical manner.

In the text which follows, two diagrams, Figs. 2(a) and 2(b), are used to demonstrate the analogy between the person taking "instructions" from a group of mail boxes and the basic operation of a real minicomputer.

Fig. 2(a) shows the Post Office boxes, a figure representation of a person who is able to "fetch" and return the "instructions" or "data" from and to the boxes, and a "scratch pad" on which the person can make temporary calculations when directed to do so.

In Fig. 2(b) are three interconnected boxes which form a "block diagram" of a computer. The uppermost portion of the "block diagram" is labeled the "memory." The middle portion is labeled the "central processor unit" or "CPU" for short. The lower part of the diagram depicts an "accumulator."

The correlation between the two pictures is extremely simple. The "Post Office boxes" correspond to the "memory" portion of a real computer. The "memory" is a storage place, a location where instructions and data can be stored for long lengths of time. The "memory" can be "accessed." "Instructions" and/or "data" can be taken out of memory, operated on, and replaced. New "data" can be put into the "memory." A "memory" that can be "read from" as well as "written into" is called a "read and write memory." A "read and write memory" is often referred to as a "RAM" as an abbreviation. Many times it is feasible to have a "memory" that is only "read from." A memory that is never "written into," but is only used to "read from," is termed a "read only memory" and is abbreviated as a "ROM." For the present discussion the term "memory" will refer to a "read and write memory" ("RAM").

The figure of a person in Fig. 2(a) corresponds to the central processor unit in Fig. 2(b). The cental processor

unit in a computer is the section that "controls" the overall operation of the machine. The "CPU" can receive (fetch) "instructions" or "data" from the memory. It is able to "interpret" the "instructions" it fetches from the memory. It is also able to perform various types of mathematical operations. It can also "return" information to the memory – for instance make deposits of "data" into the memory. The "CPU" also contains control sections that enable it to sequentially "access" the "next" location in memory when it has finished performing an operation, or, if it is directed to do so, to "access" the memory at a specified location, or to "jump" to a new area in memory from which to continue fetching "instructions."

The pad of paper and pencil in Fig. 2(a) corresponds to the block titled "accumulator" in Fig. 2(b). The "accumulator" is a temporary "register" or "manipulating area" which is used by the CPU when it is performing operations such as adding two numbers. One number or piece of information can be temporarily held in it while the central processor unit goes on to obtain additional instructions or data from memory. It is an electronic "scratch pad" for the CPU.

The three fundamental units – the memory, central processor unit, and the accumulator – are at the heart of every digital computer system. Of course, there are other parts which will be added in and explained later, but these fundamental portions can be used to explain the basic operation of a digital computer which is the purpose of this article.

The reader should learn the names of the basic parts of the computer as they are presented. Note how easy it is to remember the portions that have been shown. The "remembering" element is a "memory." The portion that does the "work" or processing is simply termed the "central processor unit," and the part that is used to accumulate information temporarily is aptly called the "accumulator!"

The reader should now have a conceptual view of the concept behind a computer's operation and an understanding of the machine's most basic organization. It is simply a machine that can fetch information from a memory, interpret the information as an instruction or data, perform a very small operation, and continue on to determine the next operation that is to be performed. Each operation it is capable of doing is very tiny by itself, but when the many operations of a typical "program" are performed in sequence, the solutions to very complex problems can be obtained. It is important to remember that the computer can perform each little operation in just a few millionths of a second! Thus a program that might seem very large to a person – say one with many thousands of individual instructions – would only take a digital computer a few thousandths of a second to perform. The speed with which the computer can execute individual instructions is what gives the computer its seemingly fantastic capability.

Fig. 2(b). Block diagram of a computer's fundamental components.

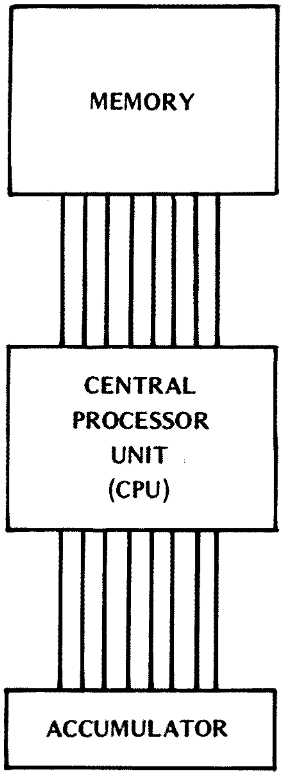

It is now time to start delving into the actual physical manner in which a computer operates. How can a machine be constructed so that it is able to perform the processes of the central processor unit? While it will require a number of pages of text to explain the procedure, it is not nearly as difficult to understand as many people might suspect. The complexity of a computer when first viewed by a person is caused by the fact that it appears to consist of many hundreds of parts. It becomes much simpler when one understands that the hundreds of parts are really made up from a few dozen similar parts and they are carefully organized into just a few major operating portions. The reader is already familiar with the most fundamental portions.

As fantastic as it may sound at first, a digital computer can be thought of as really nothing more than a highly organized collection of "on or off" switches! Yes, computers are constructed from electronic devices that can only assume one of two possible states! The electronic switches can be constructed in a variety of ways. For instance, the switch can be made so that the voltage at a given point is either high or low, or current through a device is either flowing or not flowing, or flowing in one direction, and then the other direction. But, regardless of how the electronic switch is constructed, its status can always be represented as being either "on" or "off." This "on" or "off" status can be mathematically symbolized most suitably by a mathematical system based on "binary" notation.

Some people tend to think that computers are very difficult to understand because they have heard of "strange" types of mathematics that are often

As fantastic as it may sound at first, a digital computer can be thought of as really nothing more than a highly organized collection of "on or off" switches!

referred to in conjunction with computers. In actuality much of the mathematics that are dealt with in computer technology are much easier to understand and deal with than the decimal system that the average person is familiar with. In the decimal numbering system a person must learn 10 different symbols, and in order to manipulate those symbols, they must memorize a lot of information. For instance, look at how students are taught to multiply. The learning process actually involves the student having to memorize a rather large number of facts. Because of the way it is typically taught, most students never realize how much work they have to go through just to learn the multiplication tables! The teacher does not stand up and say, "OK, now you are going to memorize about 100 facts." Instead, over a period of a few weeks or so, the student is made to memorize the 100 or so facts – a few at a time. The student must learn the value of each digit multiplied by all the other digits in the decimal numbering system. The decimal numbering system is far more complicated for the beginner than learning the binary numbering system, and the binary numbering system is the one utilized by computers at their most basic functioning level. The reason the computer uses the binary system is because it is the simplest system around and hence the easiest one with which to construct a computing machine!

Readers know the word "binary" indicates "two." Computers are built up of electronic switches that can only have two possible states. The switches are binary devices. The status of the switches can be represented mathematically utilizing the "binary" numbering system. The binary numbering system only has two digits in it! They are zero (0) and one (1). A switch can thus be mathematically symbolized, for instance, by a zero when it is "off" and a one when it is "on." The opposite relationship could also be established, a one could be used to represent a switch being "off" and a zero used to represent a switch as "on." It would make no difference mathematically which convention was used as long as one was consistent. For the purposes of the present discussion, the reader can assume that the first convention (switch off = 0, switch on = 1) will be used.

It should be immediately apparent that working with a numbering system based on only two integers will be a lot easier than working with one having 10 integer symbols. In fact, most problems for people learning the binary system come about because they tend to forget how simple it is, and they tend to keep going towards a decimal solution out of habit when they are working with the binary system. For instance, when one starts to add binary numbers, as soon as the value "1" is exceeded, a "carry" to the next column must be made. The value of the addition of "1 + 1" in the binary system is: 10. It is not 2! There is no such integer as "2" in the binary numbering system. However, when a person who has worked with the decimal system for years first starts working with the binary system, old decimal habits tend to get in the way. The reader will have to beware!

To formally introduce the binary mathematical system one can start by stating that it uses two integers, zero (0) and one (1), and no others. A binary number has a value determined by the value of the integers that make up the number, and the position of the digits.

In the decimal numbering system, the reader is familiar with the location of a digit having a "weighted" value as follows: A three digit number has a value determined by the unit value of the digit in the right-most column plus the value of the digit to the left of it multiplied by 10, plus the value of the third digit multiplied by one hundred as illustrated in the following example:

THE DECIMAL NUMBER
345 IS EQUAL TO:

5 UNITS = 5
PLUS(+) 4 TIMES 10 = 40
PLUS (+) 3 TIMES 100 = 300

In other words, after the right-most column (which has the value of the digit), each column to the left is given a weighting factor which increases as a power of the total number of digits utilized by the numbering system. Note that in the above example the 4 representing 40 units is equal to 4 times the number of integer symbols in the decimal system (10) because it is located in the second column from the right. The number 3 representing 300 units is equal to 3 times the number of integer symbols in the decimal system squared because it is located in the third column from the right. This relationship of the weighted value of the digits based on their position can be described in mathematical shorthand as follows:

If the number of different integer symbols in the numbering system is U (for the decimal system U=10)

and the column whose weighted value is to be determined is column number M (starting with the right-most column and counting to the left)

and any digit is represented by the symbol X

then the weighted value of a digit in column M is expressed as:

X times U raised to the power (M-1) or $XU^{(M-1)}$

The reader can easily verify that the above formula applies to the decimal numbering system. However, the above formula is a general formula that can be used to determine the weighted positional value of any numbering system. It will be used to determine the weighted positional values of numbers in the binary numbering system.

In the binary numbering system there are just two different integer symbols (0

and 1). Thus U in the above formula is equal to 2. For illustrative purposes assume the following binary number is to be analyzed:

1 0 1

and it is desired to determine its value in terms of decimal numbers. (Remember its binary value is just 1 0 1). Using the above formula for the digit in the right-most column: M is equal to 1, thus (M-1) is equal to 0, and with X = 1:

$$\text{Weighted Value} = X \cdot U^{(M-1)} = 1 \cdot 2^{0} = 1$$

(Remember that any number raised to the zero power is equal to 1.) Going on to the next digit it can be seen that the weighted value is simply 0! Finally, the digit in the third column from the right has the weighted value because of its position:

$$\text{Weighted Value} = X \cdot U^{(M-1)} = 1 \cdot 2^{(3-1)} = 2^{2} = 4$$

Then, by adding up the sum of the weighted values (similar to that done for the decimal example earlier) one can see that the decimal equivalent of 1 0 1 binary is 5:

THE BINARY NUMBER 101

IS EQUAL TO:

	1 UNITS	=	1
+	0 TIMES 2	=	0
+	1 TIMES 4	=	4

and thus 1 0 1 in the binary numbering system is the same as 5 in the decimal numbering system.

There will be more to learn about the binary numbering system. However, the brief information given will be enough to continue on with the discussion that this section is primarily concerned with – the basic operation of a computer. Since the reader is now aware that a computer is composed of numerous electronic switches and knows that one can use a mathematical shorthand to represent the status of the switches (whether they are "on" or "off"), and is also aware of the fundamental concept behind a computer's operation, it is now possible to proceed to show how electronic switches can be arranged to build a functional computer. That is, how the electronic switches can be arranged and interconnected in a fashion that will allow a machine to "fetch" a piece of information from a "memory" section, decode the information so as to determine an "instruction," and also determine where to obtain the next instruction or additional "data."

To begin this part of the discussion it will be beneficial for the reader to picture a group of cells (similar to the Post Office boxes shown earlier) arranged in orderly rows as shown in Fig. 3. This time, instead of each cell holding a complete instruction, it can be understood that each cell only represents part of an instruction and that it takes a whole row of cells to make up an instruction. Furthermore, each cell may only contain the mathematical symbol for a one (1) or a zero (0) – or, in other words, its contents represent the status of an electronic switch!

At this time a few more computer technology definitions will be illustrated. In Fig. 3, each box containing a binary 1 or 0 represents what is called a "bit" of information. While each cell may only contain one piece of information at a time, a cell can actually represent one of two possible states of information. This is because the cell can be in two possible states – it either contains a zero or a one. If one starts assigning positional values to the cells in a row, it can be seen that the total number of possible states in one row will increase rapidly. For instance, two cells in a row can represent up to four states of information. This is because two cells side-by-side, containing either a 0 or 1 in each cell can have one of the following four states at a particular moment in time: 1

The decimal numbering system is far more complicated for the beginner than learning the binary numbering system, and the binary numbering system is the one utilized by computers at their most basic functioning level.

WORD #1	1	0	1	0	1	0	1	0
WORD #2	0	1	0	1	0	1	0	1
WORD #3	1	1	0	0	1	1	0	0
WORD #4	0	0	1	1	0	0	1	1
WORD #5	1	1	1	1	0	0	0	0
WORD #6	0	0	0	0	1	1	1	1
WORD #7	1	1	1	1	1	1	1	1
WORD #8	0	0	0	0	0	0	0	0

Fig. 3. An array of electronic cells, 8 bits per cell.

The combination of the eight cells can be filled with zeros and ones in 256 different patterns.

0, 0 1, 1 1, or 0 0. Three cells in a row can represent up to eight states of information as the possible states of three cells side-by-side are: 0 0 0, 0 0 1, 0 1 0, 0 1 1, 1 0 0, 1 0 1, 1 1 0, 1 1 1. In fact, when each cell can represent a binary number, the total number of states of information that a row of "N" cells can represent is: 2 to the Nth power, 2^n. Thus, a row of eight binary cells can represent 2 to the eighth (256) states of information! That is, the combination of the eight cells can be filled with zeros and ones in 256 different patterns!

A group (row) of cells in a computer's memory is often referred to as a "word." A "word" in a computer's memory is a fixed size group of cells that are "accessed" or manipulated during one operational cycle of the central processing unit (CPU). The CPU will effectively handle all the cells in a "word" in memory simultaneously whenever it processes information in the memory. Digital computers can have varying "word lengths" depending on how they are engineered. Many microcomputers have a memory word size consisting of eight cells. The number of cells in a word, and the number of words in a computer's memory have a lot to do with the machine's overall capability. In the typical microcomputer system, the memory is available in modules – groups of words which can be plugged into a common set of wires in the system. With current LSI technology, a typical module of moderate price has 1024 bytes in an 8-bit computer system. With the 8008 oriented design serving as the basis for this article, one could potentially plug in 16 such modules for a total of 16,384 bytes or 131,072 bits. Thus, a large amount of information can be "stored" in the computer's memory at any one time.

The astute reader may have already figured out a very special reason for grouping cells into "words" in memory. It was pointed out earlier that a row of eight cells could represent up to 256 different patterns. Now, if each possible pattern could be "decoded" by electronic means so that a particular pattern could specify a precise "instruction" for the central processor unit, then a large group of "instructions" would be available for use by the machine. That is exactly the concept used in a digital computer. Patterns of ones and zeros organized into a computer "word" are stored in memory. The CPU is able to examine a word in memory and decode the pattern contained therein to determine the precise operation that it is to perform. Most microcomputers do not decode every one of the possible 256 patterns that can be held in a row of eight cells as an instruction. They have an "instruction set" of over 100 "instructions" which are represented by different patterns of ones and zeros in an eight cell memory "word." Each pattern that represents an "instruction" can be decoded by the CPU and will cause the CPU to perform a specific function. Details of all the functions a computer can perform are usually found in the manufacturer's documentation.

There is another ingredient necessary for making the machine "automatic" in operation. That is that the CPU must "know" where to obtain the next "instruction" in memory after it completes an operation. That function is greatly aided by having the memory cells grouped as "words." The reader should note that in Fig. 3 each group of cells representing a word was labeled as: "word #1," "word #2," etc. There is a special portion of the central processor unit that is used to control where the next word containing an instruction in memory is located. This special part is commonly referred to as the "program counter." One reason it was given the name "program counter" is because most of the time all it does is count! It counts memory words! Each word in memory is considered to have an "address." In Fig. 3 each word was given an "address" by simply designating each word with a number. Word #1 has an "address" of 1. Word #2 has an address of 2, etc. The "program counter" portion of the CPU keeps tabs on where the CPU should obtain the next instruction by maintaining an "address" of the word in memory that is to be processed! About 90% of the time all the program counter does is "increment" the value it has each time the CPU finishes doing an operation. Thus, if the computer were to start executing a simple program that began by its performing the instruction contained in "word #1" in memory – the very process of having the machine start the program at that location in memory would cause the program counter to assume a value of 1. As soon as the CPU had performed the function the "program counter" would increment its value to 2. The CPU would then look at the program counter and see that its next instruction was located in word #2 in memory. When the instruction in word #2 has been processed the "program counter" would increment its value to 3. This process might continue uninterrupted until the CPU found an instruction that told it to "STOP."

A sharp reader might be starting to ask, "Why have a program counter if each instruction follows the next?" The answer is simply that the availability of a "program counter" gives the freedom of not having to always take the instruction at the next "address" in memory. This is because the contents of the "program counter" can be changed when the CPU detects an "instruction" that directs it to do so! This enables the computer to be able to "jump" around to different sections in memory, and as will become apparent later, greatly increases the capability of the machine.

Fig. 4. The program counter of an 8008 based machine.

13	12	11	10	9	8	7	6	5	4	3	2	1	0
0	0	0	0	0	0	0	0	0	0	0	0	0	0

The "program counter" is actually just a group of cells in the CPU that may contain either a binary zero or one. The binary value in the row of cells that constitute the program counter determines the "address" of a word in memory. Since the number of words in memory can be very large, and since the program counter must be capable of holding the address of any possible location in memory, the number of cells in a row in the program counter is larger than the number of cells in a word in memory. In an 8008 oriented computer design, for example, the number of cells in the program counter is 14. Since 2 to the 14th power is 16,384, the program counter can present up to 16,384 different patterns. Each pattern can be used to represent the "address" of a word in memory. Fig. 4 illustrates what the contents of the program counter would look like when it contained the address for a specific word in memory. The address the example displays is "address 0" which can be considered the first word in memory. The reader should note that an address of zero can actually represent a word in memory!

Earlier it was stated that some "instructions" can actually change the value of the program counter and thus allow a program to "jump" to different sections in memory. However, the reader now knows that a word in memory only contains eight cells, and yet the program counter of an 8008 based computer contains 14 cells. In order to change the entire contents of the program counter (by bringing in words from memory), it is necessary to use more than one memory word! This can be done if the program counter is considered to actually be two groups of cells connected together. One group contains eight cells, and the other six. In order to change the contents of the entire program counter, one whole eight cell word could be read from a memory location and placed in the right-hand group of eight cells of the program counter. Then another eight cell word could be read from memory. Since only six more cells are needed to finish filling the program counter, the information in two of the eight cells from the second word brought in from memory could be "discarded." If the information in the two left most cells of the word in memory were thrown away then the remaining six cells would contain information that could be placed in the six unfilled locations in the program counter. Most of the common 8-bit micro-computers use a similar scheme of breaking an address into two pieces when the program counter is loaded in a jump instruction.

In order to make it easier for a person working with the machine to remember "addresses" of words in memory, a concept referred to by computer technologists as "paging" is utilized. "Paging" is the arbitrary assignment of "blocks" of memory words into sections that are referred to figuratively as "pages." The reader should realize that the actual physical memory unit consists of all the words in memory – with each word assigned a numerical address that the machine utilizes. As far as the machine is concerned, the words in memory are assigned consecutive addresses from word #0 on up to the highest word # contained in the memory. However, people using computers have found it easier to work with addresses by arbitrarily grouping "blocks" of words into pages. For example in the Intel 8008 "pages" are considered to be "blocks" of 256 memory words. The first memory word address in an 8008 system is at address zero (0). Programmers could refer to this word as word #0 on page #0. The 256th word in memory as far as the computer is concerned has an address of 255. (Note: Since the address of 0 is actually assigned for the first physical word in memory, all succeeding words have an address that is one less than the physical quantity!) A programmer could refer to this word as word #255 on page #0. The 257th word in memory has an absolute address of 256 ("n"th word minus one since location 0 contains a memory word) as far as the machine is concerned, but a programmer could refer to that word location as being on page #1 at location 0! Similarly, the 513th word in memory, when the paging concept is used, becomes word #0 on page #2 for a programmer – but it is just 512 as far as the machine is concerned. Paging at multiples of 256 is a convenient tool when dealing with any 8-bit micro-computer.

The reader might have noted a nice coincidence in regards to the assignment of "paging" in 8-bit computers. Each "page" refers to a

There is a special portion of the central processor unit (CPU) that is used to control where the next word containing an instruction in memory is located – the "program counter." Most of the time all it does is count!

"block" of memory words that contains 256 locations (0 to 255). The reader will recall that that is exactly the number of different patterns that can be specified by a group of eight binary cells, and there are eight binary cells in a memory "word." The relationship is more than coincidental! Note that now one has devised a convenient way for a person to be able to think of memory addresses and at the same time be able to specify a new address to the program counter that will still result in it containing an "absolute" address that the machine can use. For instance, if it was desired to change the contents of the 14 cell program counter from an absolute address of word #0, say to word #511, the following procedure could be used: The programmer would first specify an instruction that the CPU would decode as meaning "change the value in the program counter." (Such an instruction might be a "jump" instruction in the instruction set.) Following that instruction would be a word that held the desired value of the "low order address" or word # within a "page." Since a memory word only has eight cells, since eight cells can only represent 256 different patterns, and since one of the patterns is equivalent to a value of zero, then the largest number the eight cells can represent is 255. However, this is the largest word # that is contained on a page. This value can be placed in the right-most eight cells of the program counter. Now it is necessary to complete the address by getting the contents of another word from memory. Thus, immediately following the word that contained the "low address" would be another word that contained the "page #" of the address that the program counter was to contain. In this case the page number would be 1. When this value is placed in the left six cells of the program counter the program counter would contain the pattern in Fig. 5.

If desired, the reader can verify by using the formula presented previously for determining the decimal value of a binary number, that the pattern presented in Fig. 5 corresponds to 511, and thus, by using the "page #" and "word # on the page," each of which will fit in an eight cell memory word, a method has been demonstrated that will result in the program counter being set to an absolute address for a word in memory. Fig. 6 provides some examples as a summary.

By now the reader should have a pretty good understanding of the concepts regarding the organization of memory into electrical cells which can be in one of two possible states, the grouping of these cells into "words" which can hold patterns which the CPU can recognize as specifying particular operations, and the operation of a "program counter" which is able to hold the "address" of a word in memory from which the CPU is to obtain an instruction.

It is now time to discuss the operation of the "scratch pad" area for a computer – the accumulator (and some

Fig. 5. The program counter with address 511 represented in binary notation.

13	12	11	10	9	8	7	6	5	4	3	2	1	0
0	0	0	0	0	1	1	1	1	1	1	1	1	1

$$\underbrace{\overbrace{0\ 0\ 0\ 0\ 0\ 0}^{\text{PAGE \#0}}\ \overbrace{0\ 0\ 0\ 0\ 0\ 0\ 0\ 0}^{\text{WORD \#0}}}_{\text{ABSOLUTE ADDRESS IN THE PROGRAM COUNTER}}$$

1ST PHYSICAL WORD IN MEMORY HAS AN ABSOLUTE ADDRESS OF: 0

$$\underbrace{\overbrace{0\ 0\ 0\ 0\ 0\ 0}^{\text{PAGE \#0}}\ \overbrace{1\ 1\ 1\ 1\ 1\ 1\ 1\ 1}^{\text{WORD \#255}}}_{\text{ABSOLUTE ADDRESS IN THE PROGRAM COUNTER}}$$

256th PHYSICAL WORD IN MEMORY HAS AN ABSOLUTE ADDRESS OF: 255

$$\underbrace{\overbrace{0\ 0\ 0\ 0\ 0\ 1}^{\text{PAGE \#1}}\ \overbrace{0\ 0\ 0\ 0\ 0\ 0\ 0\ 0}^{\text{WORD \#0}}}_{\text{ABSOLUTE ADDRESS IN THE PROGRAM COUNTER}}$$

257th PHYSICAL WORD IN MEMORY HAS AN ABSOLUTE ADDRESS OF: 256

$$\underbrace{\overbrace{0\ 0\ 0\ 0\ 0\ 1}^{\text{PAGE \#1}}\ \overbrace{0\ 0\ 0\ 0\ 0\ 0\ 0\ 1}^{\text{WORD \#1}}}_{\text{ABSOLUTE ADDRESS IN THE PROGRAM COUNTER}}$$

258th PHYSICAL WORD IN MEMORY HAS AN ABSOLUTE ADDRESS OF: 257

Fig. 6. Examples of addresses in an 8008 based system.

additional "manipulating registers" in the typical 8008 based computer).

As was pointed out earlier, there is a section of a computer that is used to perform calculations in and which can hold information while the CPU is in the process of "fetching" another instruction from the memory. The portion was termed an "accumulator" because it could "accumulate" information obtained from the CPU performing a series of instructions until such time as the CPU was directed to transfer the information elsewhere (or discard it). The accumulator is also considered to be the primary "mathematical" center for computer operations for it is the place where additions, subtractions, and various other mathematically oriented operations (such as Boolean algebra) are generally performed under program control.

The concept of an "accumulator" is not difficult to understand and its physical structure can be readily explained. The actual control of an accumulator by the CPU can be quite complex, but these complex electronic manipulations do not have to be understood by the computer user. It is only necessary to know the "end results" of the various operations that can be performed within an accumulator.

The accumulator in an Intel 8008 based machine can be considered as a group of eight "memory cells" similar to a "word" in memory except that the information in the cells can be manipulated in many ways that are not directly possible in a word in memory.

Fig. 7 shows a collection of eight binary cells containing ones and zeros to represent an accumulator. The cells are numbered from left to right starting with "B7" down to "B0." The designations refer to "bit positions" within the accumulator. Note that the right-most cell is designated B0 and the eighth cell (left-most cell) is designated B7. The reader should become thoroughly familiar with the concept of assigning the reference of "zero" to the right-most bit position in a row of cells (similar to the concept of assigning a reference of zero to the first address of a word on a page in memory) as the convention is frequently used by computer technologists. The convention can be confusing for the beginner who fails to remember that the physical quantity is one more than the reference designation. The convention of labeling the first physical position as zero makes much more sense once the reader learns to think in terms of the binary numbering system and thoroughly realizes that the "zero" referred to so frequently in computer work when discussing actual operations actually represents a physical state (the status of an electronic switch) and does not necessarily imply the mathematical notion of "nothing." The concept of assigning a bit designation to the positions of the cells within the accumulator will allow the reader to follow explanations of various accumulator operations.

Fig. 7. The accumulator, pictured with binary 10101010 (decimal value 160) in its 8 bits.

B7	B6	B5	B4	B3	B2	B1	B0
1	0	1	0	1	0	1	0

The accumulator simply holds a number–it adds and subtracts–and "rotates" its contents.

One of the most fundamental and most often used operations of an accumulator is for it to simply hold a number while the CPU obtains a second operator. In an 8008 type of machine the accumulator can be "loaded" with a value obtained from a location in memory or one of the "partial accumulators." It can then hold this value until it is time to perform some other operation with the accumulator. (It will become apparent later that the accumulator of an 8008 can also receive information from external devices.)

Perhaps the second most often used operation of an accumulator is to have it perform mathematical operations such as addition or subtraction with the value it contains at the time the function is performed and the contents of a memory location or one of the "partial accumulators." Thus if the accumulator contained

PAGE #1 — WORD #2

0	0	0	0	0	1	0	0	0	0	0	0	1	0

ABSOLUTE ADDRESS IN THE PROGRAM COUNTER

259th PHYSICAL WORD IN MEMORY HAS AN ABSOLUTE ADDRESS OF: 258

PAGE #1 — WORD #255

0	0	0	0	0	1	1	1	1	1	1	1	1	1

ABSOLUTE ADDRESS IN THE PROGRAM COUNTER

512th PHYSICAL WORD IN MEMORY HAS AN ABSOLUTE ADDRESS OF: 511

PAGE #2 — WORD #0

0	0	0	0	1	0	0	0	0	0	0	0	0	0

ABSOLUTE ADDRESS IN THE PROGRAM COUNTER

513th PHYSICAL WORD IN MEMORY HAS AN ABSOLUTE ADDRESS OF: 512

PAGE #3 — WORD #255

0	0	0	0	1	1	1	1	1	1	1	1	1	1

ABSOLUTE ADDRESS IN THE PROGRAM COUNTER

1024th PHYSICAL WORD IN MEMORY HAS AN ABSOLUTE ADDRESS OF: 1023

Fig. 8. Adding the content of a memory word to the accumulator.

B7	B6	B5	B4	B3	B2	B1	B0	
0	0	0	0	0	1	0	1	ORIGINAL CONTENTS OF THE ACCUMULATOR
0	0	0	0	0	0	1	1	CONTENTS OF THE SPECIFIED WORD IN MEMORY
0	0	0	0	1	0	0	0	FINAL RESULTS AFTER THE ADDITION IN THE ACCUMULATOR

the binary equivalent of the decimal number 5, and an instruction to add the contents of a specific memory location which contained the binary equivalent of the decimal number 3 was encountered, the accumulator would end up with the value of 8 in binary form as shown in Fig. 8.

Perhaps the next most frequently used group of operations for the accumulator is for it to perform "Boolean" mathematical operations between itself and/or other "partial accumulators" or words in memory. These operations in the typical microcomputer include the logical "and," "or," and "exclusive or" operations.

Another important capability of the accumulator is its ability to "rotate" its contents. In an 8008, as in many micros, the contents of the accumulator can be rotated either to the right or left. This capability has many useful functions, and is one method by which mathematical multiplication or division can be performed. Fig. 9 illustrates the concept of "rotating" the contents of the accumulator.

The astute reader may notice that the accumulator rotate capability also enables the accumulator to emulate a "shift register" which can be a valuable function in many practical applications of the computer.

The accumulator serves another extremely powerful function. When certain operations are performed with the accumulator the computer is capable of examining the results and will then "set" or "clear" a special group of "flags." Other instructions can then test the status of the special "flags" and perform operations based on the particular setting(s) of the "flags." In this manner the machine is capable of "modifying" its behavior when it performs operations depending on the results it obtains at the time the operation is performed!

In an 8008 based computer, there are four special flags which are manipulated by the results of operations with the accumulator (and in several special cases by operations with "partial accumulators"). These four flags are described in detail below. Other micros have similar condition flags.

The "carry flag" can be considered as a one bit (cell) extension of the accumulator register. This flag is changed if the contents of the accumulator should "overflow" during an addition operation (or "underflow" during a subtraction operation). Also, the "carry bit" can be utilized as an extension of the accumulator for certain types of "rotate" commands.

The "sign flag" is set to a logic state of "1" when the most significant bit (MSB) of the accumulator (or partial accumulator) is a "1" after certain types of instructions have been performed. The name of this flag derives from the concept of using two's complement arithmetic in a register where the MSB is used to designate the sign of the number in the remaining bit positions of the register – conventionally, a "1" in the MSB designates the number as a "negative" number. If the MSB of the accumulator (or partial accumulator) is "0" after certain operations, then the "sign flag" is zero (indicating that the number in the register is a positive number by two's complement convention).

The "zero flag" is set to a logic state of "1" if all the bits in the accumulator (or partial accumulator) are set to zero after certain types of operations have been executed. It is set to "0" if any one of the bits is a logic one after these same operations. Thus the "zero flag" can be utilized to determine when the value in a particular register is zero.

The "parity flag" is set to a "1" after certain types of operations with the accumulator (or partial accumulators) when the number of bits in the register that are a logic one is an even value (without regard to the positions of the bits). The "parity flag" is set to "0" after these same operations if the number of bits in the register that are a logic one is an odd value (1, 3, 5 or 7). The "parity flag" can be especially valuable when data from external devices is being received by the computer to test for certain types of "transmission errors" on the information being received.

In its simplest form, a group of switches can be used as an input device and a group of lamps as an output device!

In addition to the full accumulator previously discussed there are six other 8 bit registers in the Intel 8008 computer referred to as "partial accumulators" because they are capable of performing two special functions normally associated with an accumulator (in addition to simply serving as temporary storage registers). The full accumulator will often be abbreviated in this manual as "ACC" or "register A." The six "partial accumulators" will be referred to as "registers B, C, D, E, H and L."

Registers B, C, D, E, H and L of an 8008 are all capable, upon being directed to do so by a specific instruction, of either incrementing or decrementing their contents by one. This capability allows them to be used as "counters" and "pointers" which are often of tremendous value in computer programs. What makes them especially valuable in 8008 architecture is that when their contents are incremented or decremented the immediate results of that register will affect the status of the "zero," "sign," and "parity" flags discussed above. Thus it is possible for the particular contents of these registers to affect the operation of the computer during the course of a programs operation and they can be used to "guide" or modify a sequence of operations based on conditions found at the actual time a program is executed.

Fig. 9. Rotating the content of the accumulator.

B7	B6	B5	B4	B3	B2	B1	B0	
0	0	0	0	0	0	1	0	ORIGINAL CONTENTS OF THE ACCUMULATOR (EQUAL TO DECIMAL 2)
0	0	0	0	0	1	0	0	RESULT WHEN THE ACCUMULATOR IS ROTATED TO THE LEFT ONE TIME (VALUE NOW EQUAL 4)
0	0	0	0	0	0	0	1	RESULT WHEN THE ACCUMULATOR IS NOW ROTATED TO THE RIGHT TWO TIMES (VALUE NOW EQUAL 1)
1	0	0	0	0	0	0	0	NOTE THAT IF A ROTATE RIGHT COMMAND IS DONE AGAIN THAT THE "1" IN POSITION B 0 WILL APPEAR AT B 7 !!
0	0	0	0	0	0	0	1	AND THAT NOW A ROTATE LEFT COMMAND WOULD RESTORE THE "1" IN POSITION B 7 BACK TO B 0 !

It should be noted that registers B, C, D, E, H and L are capable of being incremented and decremented — but the full accumulator — register A — cannot perform those two functions in the same manner. (The full accumulator can be incremented or decremented by any value by simply adding or subtracting the desired value. There is not, however, a simple increment or decrement by one instruction for use with the full accumulator of an 8008!)

Two of the partial accumulators, registers H and L, serve an additional purpose in the 8008 computer CPU. These two registers can be used to directly "point" to a specific word in memory so that the computer may obtain or deposit information in a different part of memory than that in which a program is actually being executed. The reader should recall that a special part of the central processor unit (CPU) termed the program counter is used to tell the computer where to obtain the next instruction while executing a program. The program counter was effectively a "double word length" register that could hold the value of any possible address in memory. The program counter is always used to tell the machine where to obtain the next instruction. However, it is often desirable to have the machine obtain some information — such as a "data word" — from a location in memory that is not connected with where the next instruction to be performed is located. This can be accomplished by simply loading "register H" with the "high address" (page) portion of an address in memory, then loading "register L" with the "low address" portion of an address in memory, and then utilizing one of a class of commands that will direct the CPU to fetch information from or deposit information into the location in memory that is specified ("pointed to") by the "H" and "L" register contents. This information flow can be from/to the location specified in memory and any of the CPU registers.

At this time it would be beneficial for the reader to study Fig. 10. Fig. 10 is an expanded block diagram of Fig. 2(b) and shows the units of the computer which have been presented in the previous several pages.

Until now no mention has

It has been said that the computer is the most versatile machine in existence and that its applications are limited only by man's ability to develop programs that direct the operation of the machine.

The computer's great versatility comes about because the machine is capable of executing a large group of instructions in an essentially limitless series of combinations.

been made of how information is put into or received from a computer. Naturally, this is a very vital part of a computer because the machine would be rather useless if people could not put information into the machine upon which calculations or processing could be done, and receive information back from the machine when the operations(s) had been performed!

Communications between the computer and external devices – whether those devices be simple switches, or transducers, or teletype machines, or cathode-ray-tube display units, or keyboards, or "mag-tape" and "disk" systems – or whatever, are commonly referred to as input/output operations and are collectively referred to in abbreviated form as "I/O" transfers.

In the Intel 8008 computer designs all "I/O" transfers are typically made between external "I/O ports" (which connect to external devices via appropriate electronic connections) and the full accumulator in the computer. This I/O structure means that a whole group of devices can be simultaneously hooked up to the computer and the computer used to receive information from or transmit information to a variety of devices as directed by a "program." A special set of commands is used to instruct the computer as to which "I/O port" is to be operated at any particular instant. With appropriate programming it is then possible to have the computer "communicate" with a large variety of devices in an essentially "automatic" mode – for instance receiving information from a digital multimeter at specified times, then possibly performing some averaging calculations, and then outputting results to a teletype machine without human intervention. Or, in other applications – information from a human operator can be typed into the machine using a typewriter-like keyboard. In its simplest form, a group of switches can be used as an input device and a group of lamps used as an output device for the computer!

Fig. 10. The block diagram of Fig. 2(b) filled in with the designations for an Intel 8008 computer.

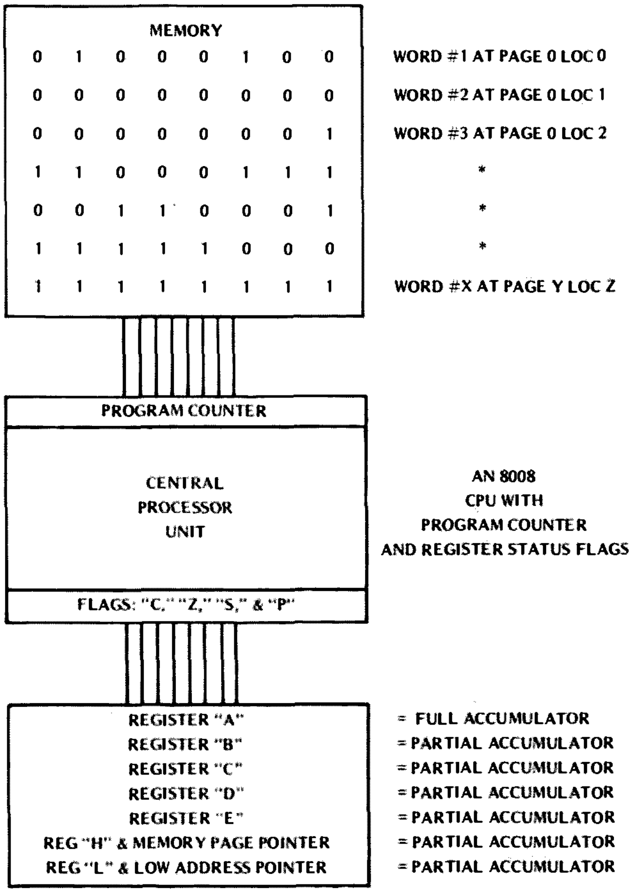

However, a more sophisticated system used in many applications would be to use a teletype machine or a combination of a keyboard and a cathode-ray-tube (CRT) display attached to input and output ports to serve as the primary means of I/O. A person can thus type information on the keyboard which will pass it into the computer, and the computer can display the results of its operations on the CRT display (which can, incidentally, be made from an ordinary oscilloscope and a special CRT interface unit such as that described in Jim Hogenson's article in BYTE #2).

Perhaps the most wonderful and exciting aspect about a digital computer is its tremendous versatility. It has been said that the computer is the most versatile machine in existence and that its applications are limited only by man's ability to develop programs that direct the operation of the machine. It is undoubtedly one of the best machines for allowing man to exercise and test his creative powers through the development of programs that direct the machine to perform complex operations that can not only control other machines, or perform calculations many times faster than humanly possible, but because it can be used to "simulate" or "model" other systems that it might be impractical to build for purely experimental purposes. Thus man can create a "model" in a computer program and actually "play" with the synthetic model without actually building the physical device!

The computer's great versatility comes about because the machine is capable of executing a large group of instructions in an essentially limitless series of combinations – these series of instructions are stored in the memory bank(s) of the computer – and a new series of instructions can be placed in the memory bank(s) whenever desired. In fact, the memory bank(s) can often hold several completely unrelated "programs" in different sections and thus one can have a machine that performs totally unrelated tasks simply by pushing a few buttons and thereby directing the machine to start executing a new program in a different section of memory!

The digital computer is capable of providing services to people from all walks of life! A person need only choose (or develop) programs and connect external instruments that will provide the capabilities desired.

For instance, a scientist might put a mathematical calculator program into the

computer's memory and use the computer as a sophisticated electronic calculator by using a calculator-type keyboard as an input device and a CRT display as an output device on which to receive the answers to complex mathematical calculations which the computer performs. After using the computer as a calculator for a period of time, the scientist might decide to utilize the same computer to automatically record data from instruments during an experiment. By simply putting a different program in the computer's memory and plugging some peripheral measuring instruments into the computer's I/O ports, the scientist could have the computer periodically make measurements while he went out to lunch and save the results in its memory. After lunch the scientist could have the computer tabulate and present the data obtained from the experiment in compact form. Then, by merely putting a different program in the memory, the scientist could have the computer help him set up and arrange a "reference file" all sorted into alphabetical order or any manner that would enable him to use the computer to extract information far faster than a manually operated "paper file card" system.

So the computer can be a valuable tool for a scientist; but, the same machine with a different program in its memory (and possibly different peripheral devices) could be used to control a complex manufacturing operation such as a plastic injection molding machine. In such a case I/O units that coupled to transducers on the injection molding machine might be used to relay information to the computer on a variety of parameters such as temperature of the plastic in the feed barrel, amount of feed material in the hopper and injection barrel, available pressure to the mold jaws and feed barrel, vacancy or filled status of the mold and other useful parameters. The computer could be programmed to analyze this information and send back signals to control the operation of heaters, pressure valves, the feed rate of raw materials, when to inject plastic into the mold, when to empty the mold, and other operations to enable the plastic injection system to operate in an essentially automatic mode.

Or, a businessman could use the same computer connected to an electric typewriter, with a suitable program in memory, to compose, edit and then type out "personalized form letters" by directing the computer to insert paragraphs from a "bank of standard paragraphs" so as to form a personalized customer answering system that would handle routine inquiries in a fraction of the time (and cost) that it would take a secretary to prepare such letters. Or, the businessman might utilize the computer to help him control his inventory, or speed up his accounting operations.

However, a computer that costs as little as the typical micro system does not have to be restricted to a business or scientific environment. The computer that can do all the types of tasks mentioned above can also be used to have fun with, or to perform valuable services, to private individuals.

The computer can be used as a sophisticated electronic calculator by almost anyone. It can be used to compose letters (using an editor program) by virtually anyone. Programs that sort data alphabetically or in various other categories can be of valuable service to people in many applications. The computer can be used to monitor and control many household items, serve as a security monitoring system, be connected to devices that will dial telephones, and do thousands of other tasks.

The electronic hobbyist can be kept occupied for years with a digital computer. For instance, one can build a little test instrument that plugs into a few I/O ports on the computer, then load programs into memory that will direct the computer to automatically test electronic components (such as complex TTL integrated circuits) in a fraction of a second! (Businesses can do this too!)

Or a ham radio operator can put a program into memory that will enable the computer to receive messages typed in from a keyboard, convert the messages to Morse code, and then actuate an oscillator via an output port to send perfectly timed Morse code. In addition, the ham radio operator might use the computer with an appropriate program to serve as a "contest logging aid." The "logging aid" would serve as an instant reference file whereby the operator could enter the calls of stations as they were worked and have the computer verify if the contact was a duplicate. The computer could do other tasks too, such as record the time of the contact by checking an external digital clock (or by utilizing a program that would enable the computer to be used as a clock within itself)!

And, the computer can be used to play numerous games with, such as tic-tac-toe, checkers, word games, card games, and a large variety of other types of games that one can program a computer to perform.

And perhaps most important – for the student, hobbyist, scientist, businessman, or anyone interested in the exciting possibilities of its applications – the contemporary microcomputer offers unlimited possibilities for the expression of individual creativity. For the development of computer programs can be an extremely creative, exciting and personally rewarding pastime and offers essentially limitless ways to exercise one's creative capabilities in developing "algorithms" that will enable the machine to perform desired tasks!

The development of computer programs can be an extremely creative, exciting and personally rewarding pastime and offers essentially limitless ways to exercise one's creative capabilities . . . .

The electronic hobbyist can be kept occupied for years with a digital computer.

The Micro-Sphere 200 Series computer is the most ADVANCED, low-cost computer SYSTEM available today. Together with a TV and up to three cassette recorders you can have big computer performance at a rock bottom price.

The system features a 6800 type micro-computer with 4000 characters (4K Bytes) of internal Random Access Memory (RAM) Storage. The memory is easily expandable to 8000 total characters with the addition of an optional second 4K of RAM, with even more memory to be made available shortly. The 4K bytes of memory is equivalent to 6-8 pages of close typewritten material.

Access into the Micro-Sphere is achieved by the keyboard or from cassette recorders. The computer can display information on a standard TV screen (optionally supplied) or store information on a cassette recorder.

The keyboard uses highly reliable keyswitches to insure user satisfaction. It is full alpha-numeric including an integrated numeric key pad. The cassette interface uses the "Kansas City" standard which means that you can use even the least expensive cassette recorders with your system satisfactorily though we suggest that you do use high quality tapes with your system.

You may use your own TV without modification as the system display device, or you may purchase one from Sphere.

The power requirement is a single 110 volt AC outlet. The unit uses less power than an ordinary 100 watt light bulb. All fuses, jacks, switches, and interface signals are provided on an easy-access panel at the rear of the cabinet.

The Micro-Sphere is supplied with a built-in loading program from cassette, which is in one of the several standard or optional Read Only Memory (ROM) Integrated Circuits (IC). ROM IC's are pre-programmed with specific non-eraseable information. This feature greatly reduces program loading time and inconvenience, ROM's also save valuable RAM storage. RAM's lose all stored memory whenever the computer power is turned off, while ROMs retain all programs indefinitely.

The Micro-Sphere is unique in that 16,384 different dots on your TV screen can form any number of pictures or designs which you have instructed your computer to display. These images can be changed by the computer program at a rate that appears as real-life movement, such as aircraft flight simulation, "walk-through" inspection of architectual mock-ups, time-lapse stock market graphic analysis, or even computer generated art forms, or space flight simulation where you can guide your spacecraft to the moon, planets or the universe.

You can experience the thrill of rolls, dives, loops, near-collisions and other types of aerial maneuvers to out wit the Red Baron in your Sopwith Camel and then the excitement of a victorious landing as you crash at the end of the approaching runway.

This same 128 row by 128 column dot matrix can form an alpha-numeric display of up to 16 lines by 21 characters. An optional graphics input device (Mouse) digitizes hand movements when moved about on a flat surface. The "Mouse" has a window and crosshairs, so it may be used for the accurate entry of maps or other graphic data. The mouse may also be used in the place of a joy stick for flight simulation or to enter hand movements for ping-pong or other games of skill.

Sphere Corp. has included in the basic price of the Micro-Sphere 200 the Monte Carlo games package on cassette, which allows you to play blackjack, roulette, and other games just for fun.

The Sphere Cassette Operating System (SCOS) is supplied on tape and provides Assembler, Edit, and Debugging functions to the computer when read in to RAM from the Cassette. Sub-routines for floating point and trig functions are included in the SCOS cassette and may also be purchased as an option in ROM. Sub-routines are included in SCOS which provide all necessary alpha-numeric character generation for your TV using approximately 400 bytes of RAM. An optional character generator ROM can be purchased to reduce RAM usage to 50 bytes. SCOS also supports file handling.

If the second 4K of RAM is purchased the macro facility of the assembler is then available as an extended aid to help you in the development of your own programs. The second 4K of RAM will also allow you to read in extended Business Basic from cassette. This basic provides 16 digits of decimal accuracy and extensions for business use. This Business Basic can make use of the Floating Point and Trig Package in RAM or ROM to expand its capabilities into the engineering field. The Business Basic and Trig Packages are available in ROM, which leaves all of the RAM storage available for applications written in the Basic Language. This is a concept for which you may pay $9,000 to get from an IBM 5100 computer.

One Cassette recorder is sufficient to do everything by simply changing tapes. Multiple file handling such as inventory control, pay roll, and general ledger processing etc. will be more convenient if two or even three cassette recorders are used. For example tape #1 may contain the last year-to-date accumulation file, tape #2 may contain the present pay period account, while tape #3 is used to combine tapes #1 and #2 into a new year-to-date accumulation master file. The second and third Cassette Interface options are available for those who require them.

In the near future, Sphere will release a Programmable Input/Output Controller for use with printers, disks, and other input/output devices.

The attractive two-tone case is made of mar-resistant high impact plastic designed to fit any modern decor. Additional strength and protection to components is provided by an internal metal chassis.

The unit is designed to operate in a normal home or office environment without any extra care. The Micro-Sphere is the product of many years of experience in the micro-computer field, providing a tremendous amount of power and capability in the smallest space-it requires only a small desk with space left over, and it comes fully assembled and tested--ready to use.

SPHERE CORPORATION
791 South 500 West Bountiful, Utah 84010 801 292-8466

PRICES FOR MICRO-SPHERE 200 WITH OPTIONS

No.	Description	Price/Each	Total
200	MICRO-SPHERE 200 - SYSTEM PRICE INCLUDES "A" ITEMS BELOW	$ 860.00	$ 860.00
	"A" ITEMS: 6800 type Micro-Processor unit		
	4K of Memory (RAM)		
	Cassette Loading System (ROM)		
	Sphere Cassette Operating System (SCOS) Cassette 1 time license fee@ $137.50		
	Includes Floating Point and Trig Package Cassette copy @ 12.50	$150.00	Incl.
	Monte Carlo Games Package (Cassette)	$10.00	Incl.
	First Cassette Interface		
	128 by 128 B&W Dot Matrix Graphics Display		
	Alpha-Numeric Keyboard		
	Attractive Mar-Resistant Plastic Case		
	Operators Manual		
	OPTIONS AVAILABLE THROUGH FACTORY INSTALLATION.		
	* To install options after purchase is $35.00 per shipment to our plant.		
	"B" ITEMS: Second 4K of memory (RAM)	$180.00	$180.00
	Character Generator (ROM)	$25.00	$25.00
	"C" ITEMS: Second Cassette Interface	$50.00	$50.00
	Extended Business Basic (ROM)	$400.00	$400.00
	Includes Business Basic Manual		
	Floating point & Trig package (ROM)	$130.00	$130.00
	Third Cassette Interface	$50.00	$50.00
	OPTIONS FOR PURCHASE NOT NEEDING FACTORY INSTALLATION.		
	Extended Business Basic on Cassette (Requires 2nd 4K of RAM and Character Generator in ROM.) Includes Business Basic Manual, Floating Point & Trig Package	$100.00	$100.00
	9" TV for use with Micro-Sphere 200	$150.00	$150.00
	"Mouse" Graphics Input Device (Available in May 1976) 2 ea.	$150.00	$150.00
	Operators Manual (SCOS)	$10.00	$10.00
	Business Basic Manual	$10.00	$10.00
	Maintenance Manual	$40.00	$40.00
	Empty Cassette Tapes 3 for	$10.00	$10.00
200A	INCLUDES MICRO-SPHERE 200 PLUS ALL OF "A" ITEMS ABOVE	$860.00	$860.00
200B	INCLUDES MICRO-SPHERE 200 PLUS ALL OF "A" & "B" ITEMS ABOVE	$1065.00	$1065.00
200C	INCLUDES MICRO-SPHERE 200 PLUS ALL OF "A" & "B" & "C" ITEMS ABOVE	$1695.00	$1695.00
	EVERYTHING IS IN ROM !!		

ALL UNITS ARE COMPLETELY ASSEMBLED AND READY TO USE!!

MICRO - SPHERE ORDER FORM

Item	Description	Quantity	Price/Each	Total
1				
2				
3				
4				

NAME ______________________
please print clearly

STREET ______________________

STATE ______________________

CITY: ______________________ STATE ZIP

PHONE NO. ______________________

BANK CARD NO. ______________________

SIGNATURE ______________________

A. Item Purchase Total	
B. Utah Residents add 4.75% tax	
C. Postage, handling, shipping and insurance add 2% of A	
D. Full Warranty = 10% of A.	
E. Order Total	
F. Down Payment = 25% of E.	
G. COD Balance	

SPHERE generally offers 60-90 day delivery on its products, however, parts availability may delay delivery beyond that time.
Orders may be cancelled after 120 days without penalty. Sphere's only obligation is to deliver the product. Introductory offer valid in U.S.A. only.

SPHERE CORP. 791 South 500 West, Bountiful, Utah 84010 Tel. (801) 292-8466

by
C. Warren Andreasen WA6JMM
P.O. Box 8306
Van Nuys CA 91409

A Versatile TTY Generator

A short time ago, an old Model 15 Teletype machine was, so to speak, left on my doorstep. I wanted to see it do something, and was not satisfied with pounding on the keyboard. Since I did not have the proper terminal unit and receiver combination to copy off the air, I asked myself what kind of a simple test device could be made that would make the machine print. I set to work thinking that an RY generator should not be too hard, but much to my surprise I came up with a nifty little unit which is inexpensive to build and yet will print every key and function on the Teletype machine. Not only will it print a test pattern testing *all* figures and letters, but it will also take an input from an external source, such as a memory device, and will generate useful TTY signals. With a simple interface, this unit may be run directly from a solid state keyboard.

The scope of this article will be to present a basic TTY generator which is not only a useful test generator, but may also be expanded into a complete transmission system with memory.

The heart of the system is a data selector (IC-5), and counter (IC-2&3). The data selector has eight inputs and one output. The output is connected to any one of the inputs, and the selection is done by the BCD code applied to the selection inputs. If the BCD code 000 is applied, the output is connected to input X0. If the BCD code is 100, input X1 is selected, and so on. The counter is an eight bit counter consisting of a CD4024 7 stage counter, and ½ of a CD4013, adding the 8th stage. This counter is stepped by the output of an oscillator which steps the counter every 22 ms (refer to Fig. 1). The first three stages, Q1, Q2 and Q3, are connected to the selection inputs of the data selector, causing the output to scan each input at a rate of one input each 22 ms. The inputs of the data selector are wired so that X0 is always low, X1 is always high, and X7 is always low. This leaves inputs X2-X6 open for data. For ease of explanation, we will assume the open inputs are low, the counter has been sitting, reset, at count zero. Input X0 is selected causing the output of the data selector to be low (mark). The oscillator and counter are enabled and 22 ms later input X1 is selected causing 22 ms of high (space), the start pulse, to be output. Since the next five inputs are low (assumed) the next 110 ms (5 x 22 ms) will be low (mark). Now the 8th input is selected and it is always low. If the circuit as described were allowed to continue to run, each cycle would consist of 22 ms of space and 154 ms of mark. If this were applied to a Teletype machine, the repeated LTR function would be observed. If the five (X2-X6) data inputs were

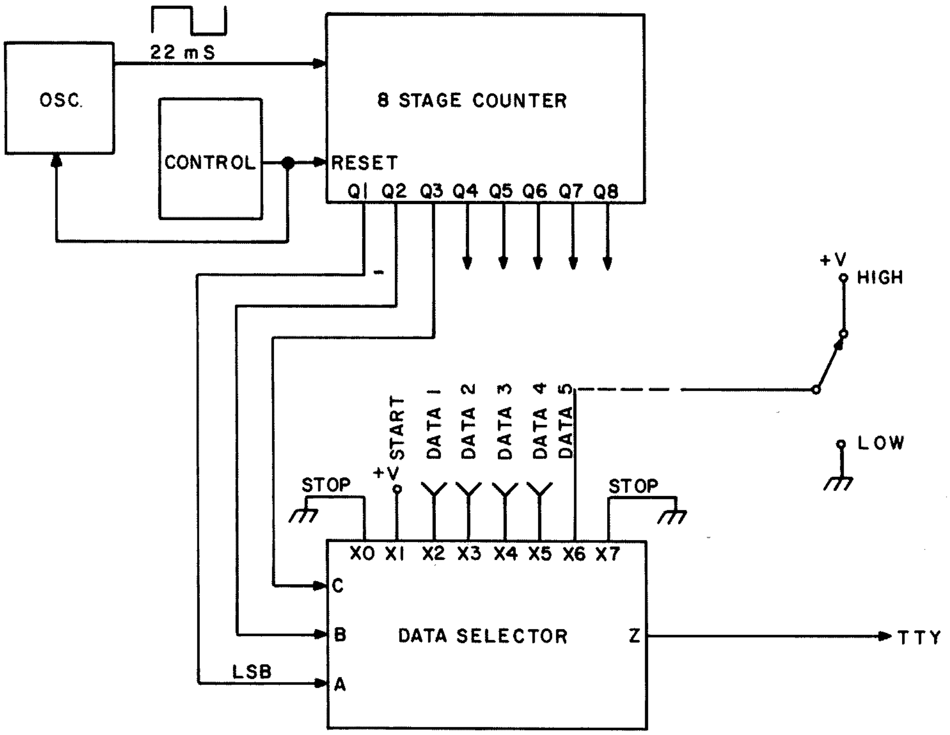

Fig. 1.

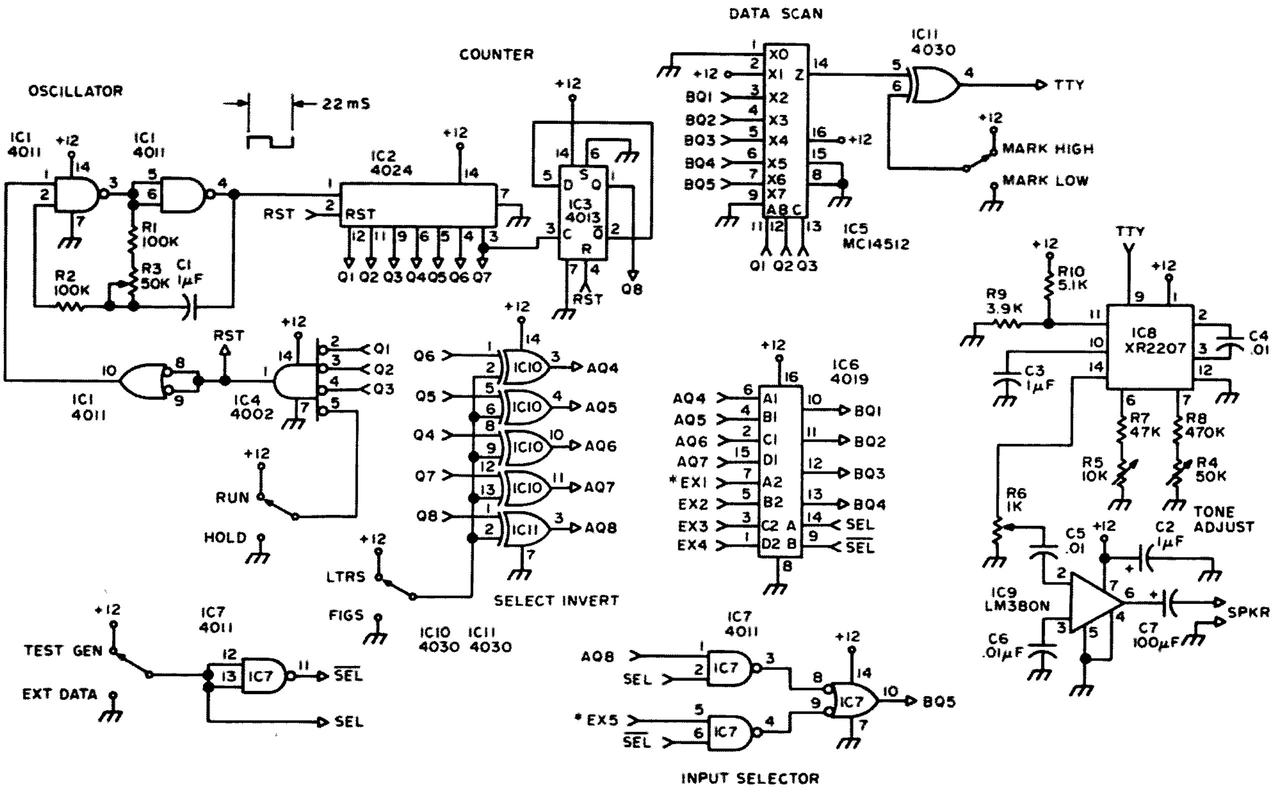

*Fig. 2. *Note: Terms EX1-EX5 have no source, but are provided as inputs for external data, or switches.*

connected to switches so that a high or low could be placed on each input, each combination of the switch settings would produce a different character or function. Going a step further, we will now connect each of the five data inputs to one of the five remaining counter outputs (Q4-Q8). As can now be observed, each pass, or scan, of the data selector will have a different combination of data for the five data bits. Again, if this were applied to a Teletype machine, it would be observed that each full cycle would consist of every key (every code) being "hit" once. Some of these characters would be upper case, and some lower. It is desirable to have all upper or all lower case characters, and if counter outputs Q4 and Q6 are interchanged, we will get this. As described, the printing would be all upper case (since the letters function is followed by the figures function). If all five bits are inverted, all will be lower case because figures is now followed by letters.

To select which polarity of signal is sent to the data selector from the counter, each bit is passed through an "Exclusive OR" gate, which will be used as an invert select function. The counter bit goes in one input, and the control signal in the other. If the control input is high, the gate will invert and the print will be all letters. If the control input is low, the gate will not invert and all figures will be printed. Now there are two selectable patterns consisting of all letters (entire alphabet), or all figures. In both patterns there is a carriage return and a line feed so the paper does not overprint, but since there is no delay after a carriage return, some machines will print the first letter of the line before the carriage has fully returned, causing a single character overprint.

To add the final touch to this circuit, a data selector will be used to select the data source. If the control signal is low, the five inputs, which can come from anything from static switches to memory, will be selected. If it is high, the internal test pattern data are selected. Also added will be a selectable inverter on the TTY output so mark high or mark low may be selected, and also a simple ASFK oscillator and audio amplifier.

When built with the values shown, this circuit will provide audio tones of 2125 Hz and 2975 Hz, and will drive a loudspeaker to ear-splitting volume. ■

Parts List

IC-1	CD4011	RCA	Quad 2 Input NAND Gate
IC-2	CD4024	RCA	7 Stage Counter
IC-3	CD4013	RCA	Dual D Flip Flop
IC-4	CD4002	RCA	Dual 4 Input NOR Gate
IC-5	MC14512	RCA	8 Input Data Selector
IC-6	CD4019	RCA	Quad AND/OR Select
IC-7	CD4011	RCA	(SEE IC-1)
IC-8	XR2207	EXAR	Voltage Controlled Oscillator
IC-9	LM380N	NAT	Audio Amplifier
IC-10	CD4030	RCA	Quad Exclusive OR
IC-11	CD4030	RCA	(SEE IC-10)
R1-R2	100k ¼ Watt Resistor		
R3-R4	50k Variable Resistor		
R5	10k Variable Resistor		
R6	1k Variable Resistor		
R7	47k ¼ Watt Resistor		
R8	470k ¼ Watt Resistor		
R9	3.9k ¼ Watt Resistor		
R10	5.1k ¼ Watt Resistor		
C1-C3	1 mF 16 volt Capacitor		
C4-C6	.01 mF Disc Capacitor		
C7	100 mF 16 volt Electrolytic Capacitor		

I/O

from page 65

of reading of *73* articles (many of which are not even written yet) you will be plain high and dry trying to fathom what these strange folk are trying to say in their weird new language.

My Computer Likes Me (when I speak in BASIC) by Bob Albrecht. Dymax, Box 310, Menlo Park CA; 64 pp., $2.00.

BASIC (A Self-Teaching Guide) by Robert L. Albrecht, LeRoy Finkel, and Jerald R. Brown. Wiley, New York; 324 pp., $3.95.

The most popular computer language for both small systems and time-sharing is BASIC. It is a powerful language, yet easy to learn, and is fast being adopted as the standard language for hobby computer program exchange. The computer novice who purchases a microcomputer will probably want to obtain a BASIC operating system for his computer, as it speeds up programming immensely.

These two textbooks are very different in scope and approach, though both are authored by Bob Albrecht of the People's Computer Company. *My Computer Likes Me* is written as a simplified approach for rank beginners, and seems aimed at the secondary school user with a classroom terminal. The approach is friendly, informal and light, with plenty of examples to show every step of the way. Only the fundamentals of BASIC are covered, with a demonstration of mathematical modeling to predict population. For a student with an innate fear of the computer and what it takes to understand one, this simple text is perfect to break down that first barrier.

BASIC (A Self-Teaching Guide) takes a more sober approach and goes much farther. Programmed teaching, with step-by-step questioning of the student, punctuates the text into individual concepts, none of which intimidate the student the way a less cautious text can. After explaining input and output, arithmetic, and simple logical statements, the more sophisticated capabilities of BASIC, such as matrix arithmetic and string (character) operations, are cautiously introduced. After completing the text, the student should feel competent to handle most problems that can be solved with BASIC and a small computer.

No text in programming is really complete without a computer to practice on, and the versions of BASIC that different manufacturers supply are not all identical to any textbook. But no manufacturer's reference book takes the time to start a new programmer off on the right track without major confusion — unless perhaps he's a genius. For a timid user, *My Computer Likes Me* would be ideal as an appetizer, but *BASIC (A Self-Teaching Guide)* provides a main course for the hungry learner.

What to Do After You Hit Return (or, PCC's First Book of Computer Games). People's Computer Company, Menlo Park CA; 158 pp.

Computers are fantastic toys, and the best thing about them is that they can be made to do so many different things, so you never really get bored. Especially with this book, which includes fifty different games you can play on a computer that speaks BASIC. These were developed on the Hewlett-Packard 2000 minicomputer system, and the programs were all tested by H-P personnel. Many have been circulating for years; some are quite recent.

There are number games, word games, pattern games, board games, simulations, and even science fiction games. *Nim, Lunar Lander, Star Trek, Madlib, Bagels*, and most other popular computer games are included. Rules are explained, sample runs are shown, and in most cases, program listings are included (in BASIC). Most can be played without a computer if you're so inclined, but the hardware is half the fun, right?

What to Do After You Hit Return is big and attractively put together on giant pages that stay open on the table. It's the software equivalent of a barrel of monkeys. See why most colleges find that most of their computer time is spent playing games!

Games, Tricks and Puzzles for a Hand Calculator by Wallace Judd. Dymax, Box 310, Menlo Park CA 94025; 91 pp., $2.95 + .50 postage and handling.

Even when I read old "fun with math" books I didn't think mathematics was fun. Now I know what was missing. This book updates the old number tricks by using calculators to do the dirty work. Suddenly math *is* fun — with the machine. *Games, Tricks, and Puzzles . . .* includes simple mathematical tricks that even children would appreciate, as well as more complicated exercises that require some high school algebra. They are explained in order of complexity.

There are also the calculator "word" games played by turning the calculator upside down, a photo story on how a calculator is made, and information to help evaluate calculators prior to purchasing one. Answers to the puzzles are in back, along with explanations of how they work. Impress your friends. You may even impress yourself!

1952/1976 — 25th Anniversary — 1952/1976 — 25th Anniversary — 1952/1976 — 25th Anniversary — 1952/1976

April - 1976

by
Jon Matthews WB0FKZ
Box St 302
Augustana College
Sioux Falls SD 57102

Chariots of the Hams?

Anyone who is aware of the history of mankind realizes the enormous engineering capabilities that some of the ancient civilizations held. Both the Greeks and Romans devised *ingenious* inventions to benefit their respective cultures.

Professor C. Q. Flugalsnort (alias Dan WN0OZW), crack archeologist, checks out an obviously primitive ham rig at the digging site.

But of course we all know that they weren't so advanced as to allow a citizen of Athens to jump into his chariot and key up the local repeater mounted on the nearby Parthenon. And we all know that it would be stupid to expect to find an FET stuck in one of the hoofs of the Trojan Horse. That would be just plain dumb, wouldn't it? Or would it? Better wait to decide until you've read this story of an ancient civilization that may have some lessons for all amateurs!

It all started one clear fall afternoon as our college ham club was holding its annual transmitter hunt and "refreshment hour." One of the guys had already found the transmitter – hanging from a shower nozzle in the fifth floor bathroom of the women's dorm. Tracking down the transmitter hadn't been the toughest part of the hunt – retrieving it from its ingenious hiding place with-

out getting caught was what took guts!

But anyway, it turned out that two of our club members had started their personal "refreshment hour" a few hours before the hunt even started, and had somehow ended up sauntering through a field some 10 miles away from the transmitter. Upon returning to the festivities, they claimed that they had been led astray by some freak harmonics from the airport VOR. But we knew better. To make matters even more ridiculous, they claimed to have tripped over a mike cord coming right out of the ground!

That's right – right out of the ground!

"Sure," we all said, having a nice chuckle over this bit of QRM. But the guys kept insisting that they were telling the truth, and pretty soon the refreshment hour had been in progress long enough for everyone to want to take a look at this place. Needless to say, we tied up the repeater with talk of this on the way out to this field, and also needless to say, every other guy in town listening thought we were nuts.

But sure enough – coming right out of this field was a mobile mike and coiled cord. We quickly checked the club records to see if we had ever had a party out here; no, we hadn't. (The possibility of a rig getting buried at one of our club parties wasn't to be overlooked, although I don't think this is what they were talking about in the recent *73* article on underground radio transmissions.)

The whole thing was so darn funny that pretty soon we had half the hams in town tromping around in this field. Shortly, one of the guys tripped over something about 30 yards away from the mike cord coming out of the ground. We all ran over.

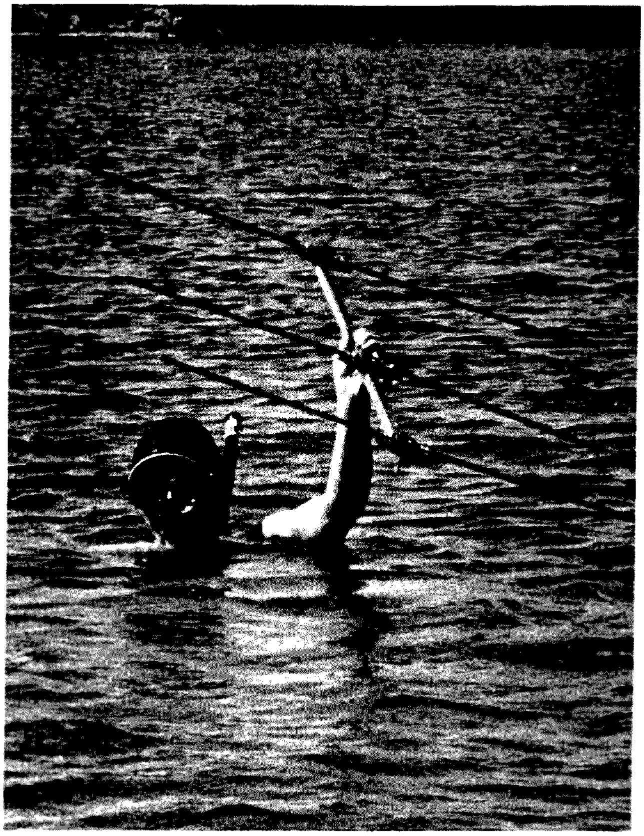

Ham scuba diver from our college ham club pulls "fossilized" 2 meter beam out of lake. Was there an ancient civilization of ham operators, and if so, did they disappear because of incentive licensing?

Flugalsnort (note puzzled expression on face) checks out mobile mike coming right out of the ground.

"Darn if that doesn't look like a two meter beam," he said, "but it looks like it's fossilized!"

Well, we all had a good laugh over this obvious prank and headed home to recharge our hand-helds and finish the "refreshment hour," which by now was becoming something more like a "refreshment day."

I awoke bright and early at 12 noon the next day to the ringing of the phone. On the line was Professor C.Q. Flugalsnort, our college's crack archeologist. Prof. Flugalsnort had heard from somebody about the strange things discovered in the field the night before. I tried to explain that it all had to be a joke pulled by someone, because one just doesn't find real fossilized two meter beams laying around in cornfields.

But Flugalsnort insisted that we had to go out and take a look. I agreed to meet him at the field, but just as I was leaving the phone rang – it was a member of the club reporting that scuba diving that day in a nearby lake he had come across another fossilized beam! Either somebody was going to an awful lot of effort to get some laughs, or we were really on to something strange.

I rounded up the rest of the club and we headed back out to the field with an assortment of shovels. Not to pass up an opportunity like this, two members of the club were already drawing up proposals to submit to the dean for us to get a full class credit in archeology for digging up

this field. (Which reminds me of the time I tried to get a class credit in physical education for hauling a 20 meter beam up a 75 foot tower alone; I deserved it. But that's another story . . .)

Anyway, Professor Flugalsnort met us at the field. Flugalsnort is the kind of guy who, if you ever saw him coming over your SSTV screen, would cause you to slap the side of your rig to see if something inside was loose.

We dug around in the cornfield for awhile with Flugalsnort on his hands and knees certain that he was about to make the biggest archeological splash since he'd delivered his paper on the plumbing of ancient fountains before a Chicago convention.

As he galloped around, the rest of us were having a difficult time resisting some 20 over S9 laughter. The two guys who had originally discovered the place had just confessed in whispers that it was their little joke on Flugalsnort all along. It seemed to the guys that a little comic revenge was in order on the professor after he had refused to let our club run antenna coax through his office window pane back at school. Seems that he unjustly thought our rigs were causing him TVI problems at home (we checked it out), and to make matters worse, he even drilled the pane himself (just the right sized hole) and hung a sign over it saying, "NO COAX." What a creep.

Well, after digging a bit more we decided that we had had our fun and started to convince the professor to give it up. We had just about accomplished this when suddenly one of our shovels went "clunk" on something in the ground. This was really funny because the guys hadn't mentioned anything about planting something else in the field. We were all too stunned to see the slight grin on Flugalsnort's face as he slowly pulled a large and ancient-looking stone slab out of the ground with the drawing below on it . . . ■

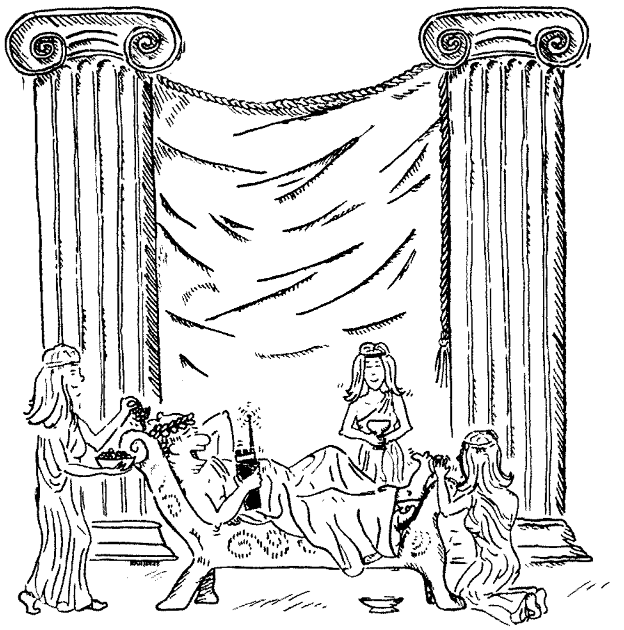

Mysterious drawing on stone slab pulled out of ground at digging site. Does the fellow on the couch resemble a well-known ham editor from New Hampshire hard at work?

by
Larry Kahaner WB2NEL
4259 Bedford Avenue
Brooklyn NY 11229

The PLL - EXPOSED!

The phase locked loop is not a new concept. But before integrated circuits, the PLL was an expensive and cumbersome device. Using vacuum tubes, chokes, and other "ancient" components, it was a mess.

The simplest PLL consists of three internal units: a phase detector or comparator, low pass filter and voltage controlled oscillator. They are connected in a loop (Fig. 1).

The Phase Detector

A phase detector (also called comparator) monitors the frequency of its input. When a change in phase (therefore frequency) occurs, it will cause a corresponding change in its output voltage. This change of output is immediate and linear. If we watch the output voltage we can tell if a frequency change was happening at the input.

In the crudest form it can be an exclusive OR gate. Fig. 2 shows the inputs and corresponding outputs. (See July, 1975, "How Gates Work," for details on the exclusive OR gate.) The action of the RC network on the output yields the error voltage.

The Low Pass Filter

The action of a low pass filter is well known. Suffice it to say that PLLs have provisions for parts of the filter to be internal and others to be external. For example, the 565 chip has an internal resistor and external capacitor forming the filter.

The Voltage Controlled Oscillator

The VCO is a complex device. As the name implies, it is an oscillator. Its task is to change its output frequency when input voltages change, the opposite of the phase detector. The output frequency will increase as the input voltage increases. To do this, however, the input voltage must increase past a known value called the "threshold voltage." The input is then known as the "control voltage." With no input it operates at a "free running" frequency (f_o) determined by external adjustments.

The Set Up

Here is what happens. If the input frequency changes, the output of the phase comparator increases or decreases. This voltage change is fed through the filter which eliminates extraneous noises and passes the signal to the VCO. This change at the VCO input will alter the output frequency such that its value will be closer to the free running frequency. And the system goes 'round and 'round until the loop is locked on the incoming signal. Reinforcement takes place.

In other words, we set the PLL to search for a certain frequency. When that special frequency is seen, the system works to keep it locked in. The error voltage is then zero and the PLL output goes low. (Does the name phase locked loop make sense now?)

Obviously, the input source, whatever it is, is independent of the PLL, but the action is such that the signal we desire is there even if it disappears for short periods of time. It works as a "flywheel effect" does. How long can it disappear and still have a locked condition? Or, to put it another way, how long does it take to realize the desired signal is there and lock on it? This is related directly to the natural frequency of the loop. The lower it is the longer the lock up time. It is therefore a function of the low pass filter. We adjust the filter for our conditions depending upon how fast our information is. If we are transmitting very fast information, we must have a fast lock up time. If the lock up time is too great (meaning slow), we will lose too much data while our loop is taking its time locking up. Less information speed gives us a greater leeway. It's a tradeoff. We want our filter as low as possible to exclude unwanted noises in our loop circuit, yet fast enough to keep all information intact.

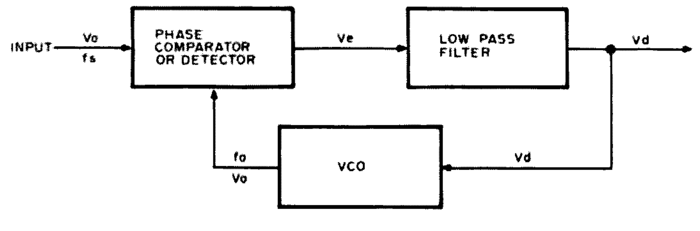

Fig. 1. Phase locked loop.

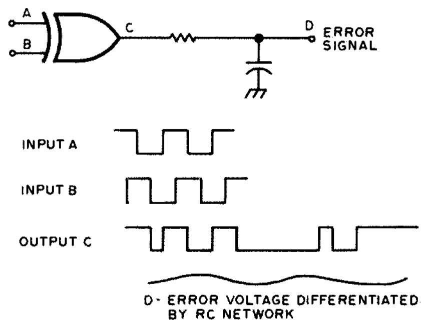

Fig. 2. Exclusive OR gate as a phase comparator.

When the input frequency (f_s) is close to the free running frequency (f_o), the VCO will synchronize and lock. But how close must they be? Just how large is this "capture range"? On most PLLs it is adjustable. It is a function of the input voltage, free running frequency and low pass filter. Equations for figuring capture range are given in PLL specs. Other names which are used are "acquisition range" and "bandwidth."

Once the loop is locked, how far can the input stray before it loses lock? This feature known as "lock range" is larger than the capture range. Once the loop is locked, the input can wander quite a way (relatively speaking) before the PLL will lose its grip. It is also called the "tracking" or "holding" range. The lock range is usually given as a percentage of the frequency. The larger the percentage, the further the input can move before the PLL unlocks. Again, very exact and easy equations are supplied in specs to compute the tracking range.

As an example, we might design a PLL to look for a touchtone signal. We would keep in mind that the capture range must be wide enough to accommodate those signals that might be slightly off frequency but still narrow enough to prevent the wrong numbers from activating our device.

Tracking range would not figure very heavily (again, relatively speaking) in our design as the tones must only be detected for a short time to be effective.

Applications

As we said before, the output dc level of the phase comparator is proportional to the frequency of the input signal at lock. As the frequency shifts, the signal to the VCO changes linearly. If we can track over a large area (about ± 60%) with linearity, we have *FM demodulation.*

The 565 is a good PLL to look at (Figs. 3, 3a). The free running frequency is determined by $f_o = \frac{1}{4} R_1C_1$. It is adjusted for the center of the input signal frequency range. The 565 also has an amplifier to increase gain of the loop – a good feature. C_3 prevents unwanted oscillations by inhibiting any feedback to the power source. The reference voltage (pin 6) is a voltage close in value to the average dc output of the demodulated signal. By connecting it to the output we can lower the gain of the loop with very little loss of output amplitude. Since the lower the gain the smaller the lock range, we can decrease the lock range without leaving too small an output to use.

C_2 is the low pass filter capacitor. It is coupled with an internal resistor of 3.6k.

Frequency Multiplication

Frequency multiplication using PLLs is easier than you may suspect. There are two methods in use. The first requires that the PLL be set to look for an harmonic of our input. If we set the VCO for the second harmonic of a signal, the completed loop will lock onto it. For all intents we have multiplied a frequency. Of course we are limited to signals rich in harmonics. We are also held captive to the first few harmonics as harmonic strength decreases with harmonic number. Loop amplification is always used in this case.

The second method is also not difficult but does require some extra equipment. Insert a frequency divider between the VCO and phase comparator. The divided VCO frequency is locked to the input. Therefore, the VCO is running at the multiple of the input frequency. The multiple depends upon the divider value. The frequency limits of the inputs must be taken into consideration with both of these procedures. (Fig. 4.)

Frequency Synthesis

PLLs have made low cost, compact FM frequency synthesis a reality. In its simplest state (Fig. 5), a multiplier is used at the input. The PLL is used as an adding device because it has a very important characteristic which others lack – stability. By setting the loop to stringent criteria, the output can be kept to close tolerances with accuracy. The input (f_{ref}) reference frequency is supplied by a crystal oscillator. By adjusting a counter or similar divider we can select or "program" a choice of frequencies. The low pass filter gets rid of the $f_o + f_{ref}$ component which exists.

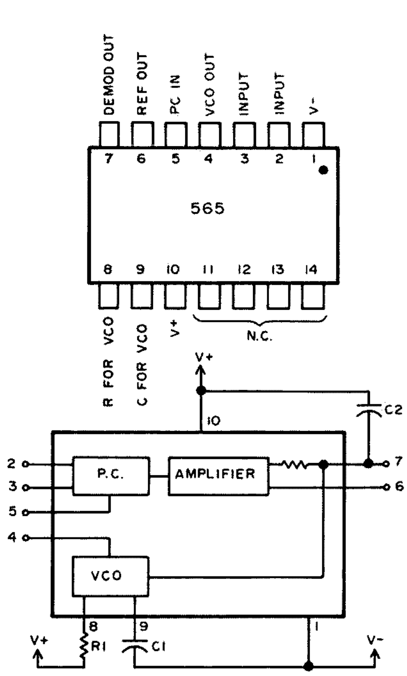

Fig. 3. 565 PLL chip.

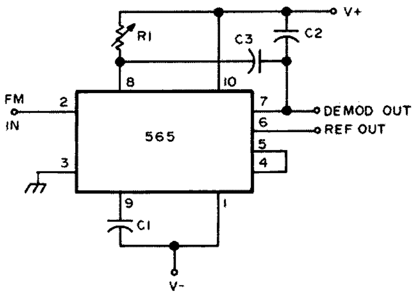

Fig. 3a. 565 PLL as an FM demodulator.

I hesitate to give exact block diagrams of synthesizers as work still continues on their design. I have seen and used many good ones, both home brew and commercial. But all leave something to be desired. This is not meant to be a criticism but a push for all experimenters to improve on current designs.

AM Detection

PLLs can also be used for AM demodulation. By using a special VCO or RC phase shifter network and another phase com-

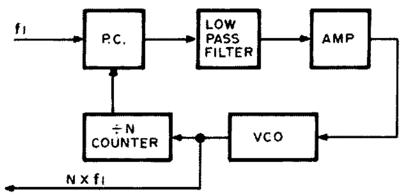

Fig. 4. Frequency multiplication.

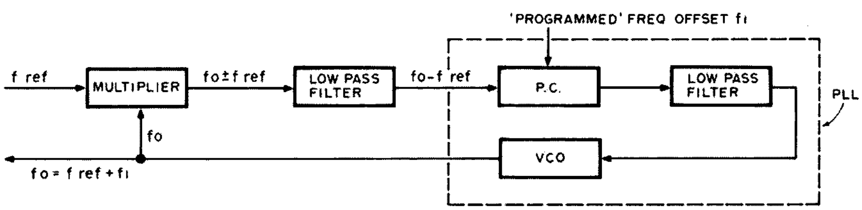

Fig. 5. Frequency synthesis.

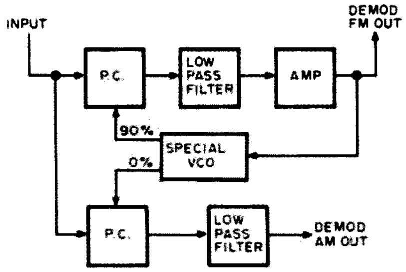

Fig. 6. AM detection using second internal phase comparator.

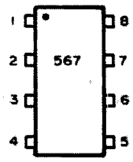

Fig. 7. 567 PLL.

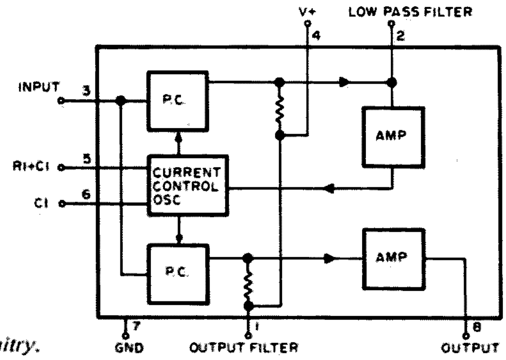

Fig. 7a. Internal circuitry.

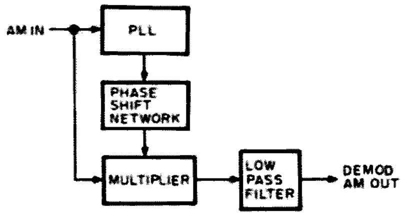

Fig. 6a. AM detection using external phase shift network.

parator, we can demodulate amplitude modulation. Internal operation is shown in Fig. 6 where the VCO output of 90° is changed to 0°. Or as in Fig. 6a where a whole new phase shift network is used. The 561 chip has an internal capability for AM detection along with its FM capability.

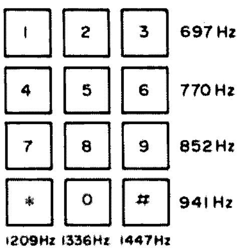

Fig. 8. Touchtones.

With the basic knowledge of the PLL, let's show how a touchtone decoder can be designed.

In order to fully design any system, all available information is needed. In this case, only the sections of the spec sheet which are necessary to this problem will be shown. Keep in mind that a lot more data is available to the user by the manufacturer.

The 567 PLL has shown to be ideal for touchtone decoding. Fig. 7 shows the layout. The "inside" view is given in Fig. 7a.

As you may already know, each digit delivers TWO tones simultaneously when pressed. Each row has a frequency and each column has a frequency. When a digit is pressed the two combine for our signal. A frequency chart is given in Fig. 8. It is therefore necessary to have two PLLs for each digit. There are a total of seven different tones. To decode the number "1" our PLLs must detect 697 Hz and 1209 Hz. The circuit is shown in Fig. 9.

The values of R_1 and C_1 are figured first. They determine the frequency of the loop. The equation is $f_o = 1/R_1 C_1$. According to the specs, R_1 should reside between 2k and 20k for best stability. In our case the top PLL will decode the 697 component, so good values might be R_1 = 6.8k and C_1 = .1 mF. To get the frequency right on the mark (our values yield 680 Hz), a potentiometer near the value of R_1 would serve nicely. Since all components have tolerances trial and error is the rule.

C_2 is part of the low pass filter. For this we use a graph supplied by the manufacturer. The graph in Fig. 10 shows bandwidth versus amplitude.

Decide the bandwidth you desire; find the input signal amplitude and pick off the value of f_oC_2. The equation for bandwidth is BW = 1070 x input voltage/f_oC_2; for inputs not greater than 200 mV, f is in Hz and C is in mF. Again, trial and error may be easier than the arithmetic.

If the input is 50 mV, f_oC_2 should equal 4.1 x 10^3 (4100) for a bandwidth of 4%. Therefore, C_2 would equal approximately 5.9 mF at 697 Hz. As we increase the tone values C_2 would get smaller because 4% of 1477 is larger than 4% of 697 Hz.

The next value is that of C_3. It sets the band edge which attenuates spurious outputs. Hence the name – output filter capacitor. If too small, it will allow frequencies near the detection range to beat against the output frequency and switch the output on and off. If too large, switching time at the output will be delayed as it charges. By experience it turns out to be equal to twice the value of C_2 or a bit more.

To make a touchtone decoder for all digits use the same techniques shown here. You may want to trade off values to get an average capacitor so you don't go nuts buying seven different kinds. And, you may decide to use only one value of rheostat for R_1, one that will satisfy all tones. Fine, no problem. But if you run into trouble, these design notes will help you out.

It is customary to have a high when the desired tone is pushed. The NOR gate at the output works fine because when the PLL locks, the error voltage is zero and a low is present. Both PLL lows presented to the NOR gate will give a high output. ■

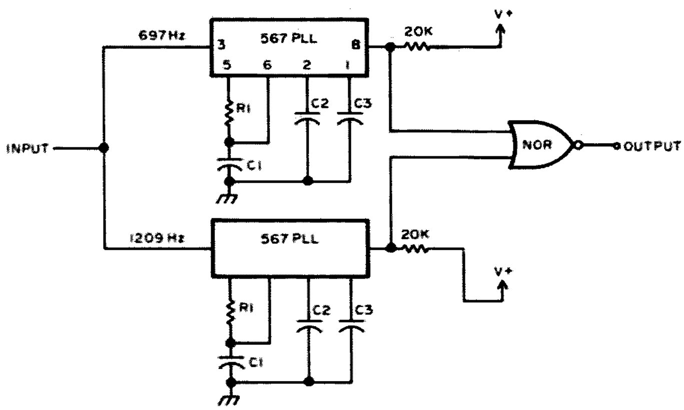

Fig. 9. Decoder.

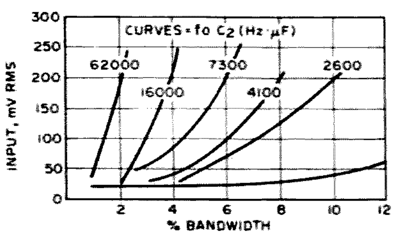

Fig. 10. Graph for determining C_2.

by
Corky Deeds
Nexus Trading Co.
Box 3357
San Leandro CA 94578

The Two-Timer

The two-time clock will display either of two different times and also flash the display at a one Hertz rate every ten minutes to remind you that it's time to ID. This clock can give you local time normally, and with a flick of the switch you have Greenwich Mean Time for operation and logging. The clock was designed with several things in mind: reliable continuous operation, two separate time display capabilities, a station ID reminder, and the ability to use several different power sources. A further qualifica-

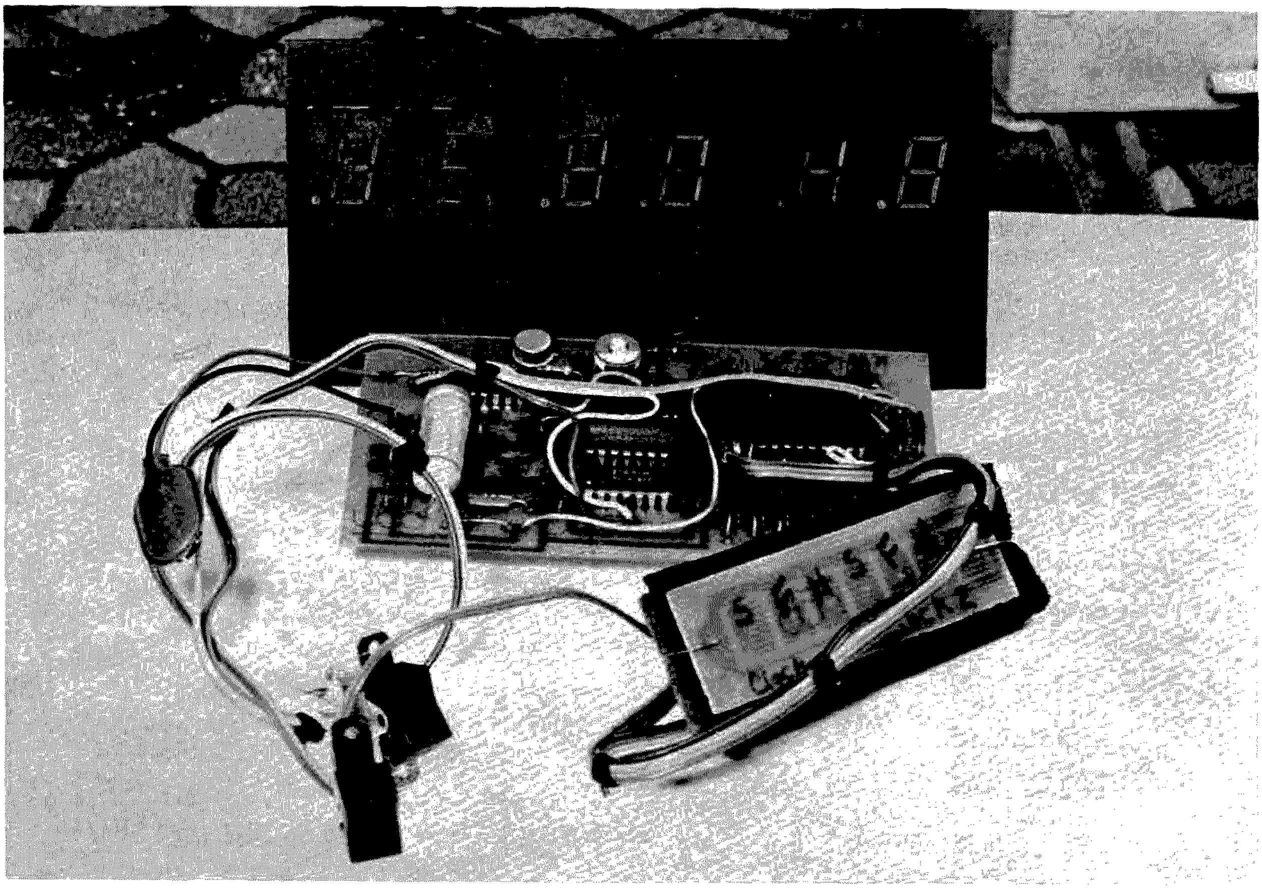

tion was that all parts be readily available to the hobbyist/amateur from usual sources. The final design was able to fulfill all the qualifications.

Theory of Operation – Clock

The simplest way to understand this circuit is to treat it as if it were a single 5314 clock with the interfacing to drive common cathode LED displays. Complete details on this circuit can be found in the National Semiconductor MOS Integrated Circuits Book in the section covering the MM5314. The 60 Hz for time keeping and the 960 Hz for the multiplex frequency are obtained from the oscillator divider circuits.

All inputs and outputs for both ICs are in parallel except the output enables (pin 1), the time setting pins (pins 13, 14 and 15) and if desired the 12/24 hour select pin (pin 10). The output enable lines are used to enable the segment outputs from the desired chip. The resistors R_{12} and R_{13} act as pull downs, holding the not selected chip's output enable low and placing that chip's segment output in a non-conducting high impedance state. The output enable of the chip selected by S_2 is either held high or pulsed high by the output of the ID timer. The multiplex timing signals for both ICs come from the same source, allowing the digit enables to function in unison.

Theory of Operation – Oscillator-Divider

The oscillator makes use of two inverters in the CD4060 to form a series resonant crystal oscillator. The 1M Ohm resistor limits the crystal drive voltage and the 4.75 Ohm resistor provides the feedback. The capacitor, C3, gives the circuit phase lead allowing the crystal to operate at series resonance. The output of this oscillator is 15.36 kHz, which is then fed into a 14 stage binary divider. The base frequency of 15.36 kHz is divided by 2^5 for 960 Hz, 2^8 for 60 Hz and 2^{12} for the 3.75 Hz used in the ID timer. Grounding pin 12 allows the oscillator and counter to function continuously. Pin 12 is the reset for the counter and shuts the oscillator off when it is pulled high.

Station ID Timer

The 3.75 Hz square wave from the OSC divider is fed into the input of a CD4040 twelve stage binary divider. The outputs of the 2^7, 2^5, 2^6, and 2^{12} stages are fed into one half of a CD4012 which acts as a coincidence detector. When 2160 pulses have been fed into the CD4040 there will be 1s on the 2^5, 2^6, 2^7, and 2^{12} outputs and zeros at all other outputs. When this happens the output of the first half of the CD4012 will go low, which is then inverted by the second half of the CD4012. A high level on the output of the second half of the CD4012 sets the RS flip flop made up of two of the four gates in a CD4001. The $\bar{Q}$ output of the RS flip flop is now forced low and NORed with the output of the second stage of the CD4040, a .937 Hz square wave. When both

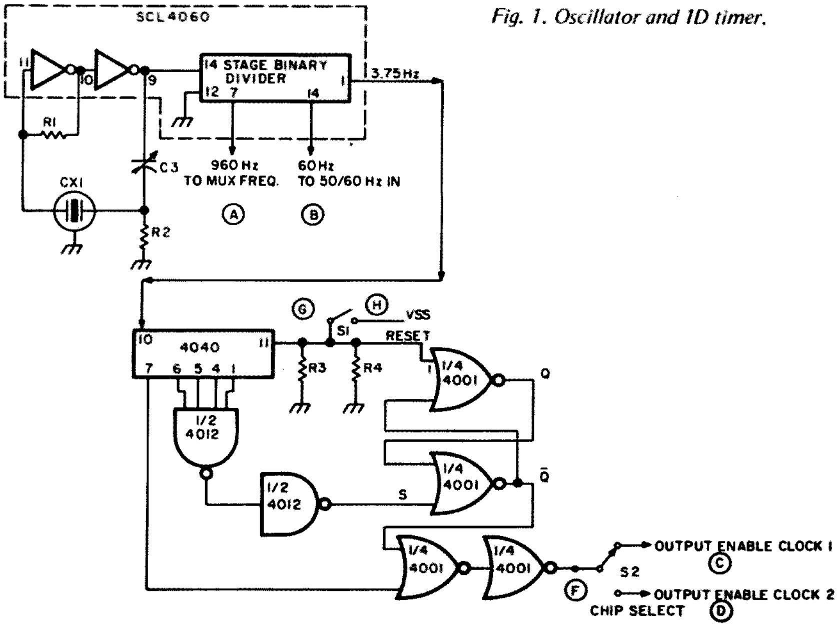

Fig. 1. Oscillator and ID timer.

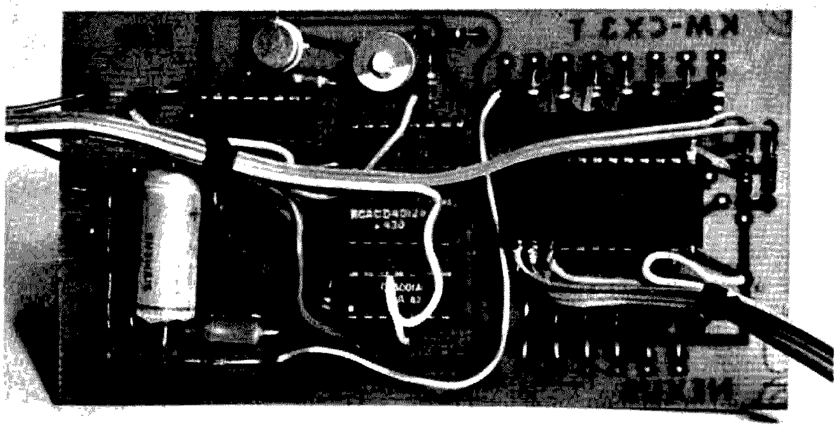

Clock board.

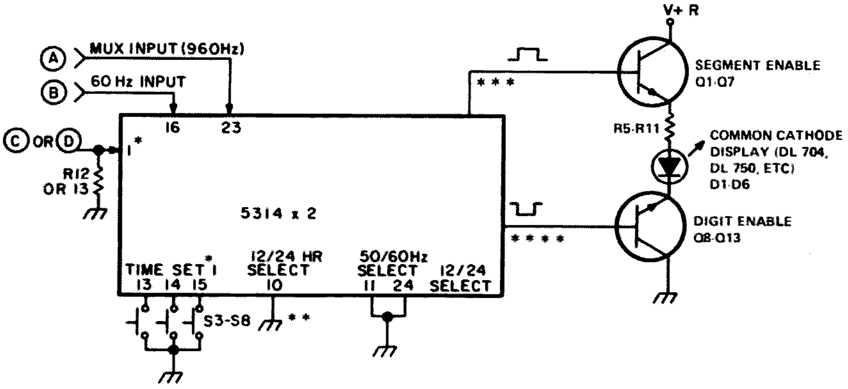

*Fig. 2. Clock chip connections. *These connections are made to each chip separately — all other pins are in parallel. **See text for connection. ***Segment outputs: Pin 3/Segment A, 4/B, 5/C, 6/D, 7/E, 8/F, 9/G. ****Digit outputs: Pin 19/Digit H10, 20/H1, 21/M10, 22/M1, 17/S10, 18/S1.*

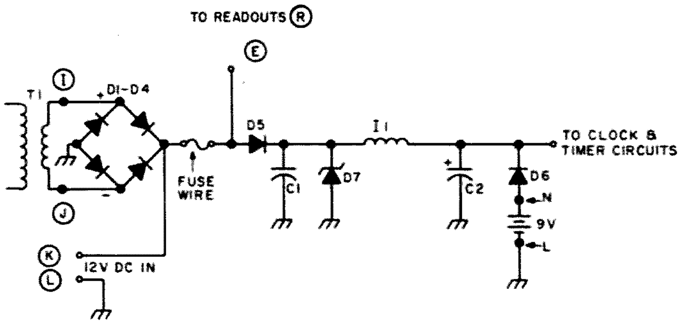

Fig. 3. Power supply.

inputs are low, the output goes high and is then inverted by the remaining quarter of the CD4001, which drives the output enable of the selected clock chip. The result is a .937 Hz blinking in the clock display. Switch S_1 is closed to place a high on the reset input of the RS flip flop and the binary divider, which reset both of them. With the RS flip flop reset, the $\bar{Q}$ output is high, forcing the output of the NOR gate low, which is inverted and holds the selected clock chip output enable high until the cycle is repeated. Placing S_1 in the reset position inhibits the operation of the ID timer. The output of either NOR gate may also be used to trigger an audible circuit of some type.

Power Supply and Filtering

The power supply will take either 9-12 V ac or from 10-14 V dc for power. When neither is present the clock will continue to operate from the 9 V battery but the displays will not light. Diode D5 prevents the standby battery and filter cap C2 from being drained by the readouts. Capacitors C1 and C2, inductor 1, and zener diode D_7 form a filter network for the ac supply and also act as spike and over voltage protection circuit for operation from a 12 V automotive system. Diode D5 also prevents damage in case the power is connected in reverse.

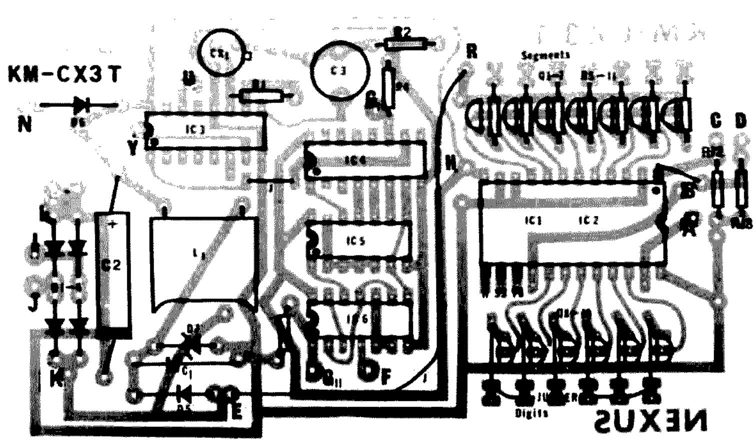

Fig. 4. Clock board (full size).

Construction is relatively straightforward using the printed circuit layouts. The use of two boards allows the clock to be assembled in a minimum of space and with only two jumpers on the clock board. The 17 interconnections between the clock and readout boards also serve as bracing.

The two 5314 clock chips are soldered together pin to pin with the exception of pins 1, 13, 14 and 15. If 12 hour operation is desired on only one chip, then it must be the bottom one. Pin 10 on the top chip is left unattached for 24 hour operation. For either dual 12 or 24 operation, pins 10 on both chips are soldered together. The trace to pin 10 is cut for dual 24 hour operation and left connected for dual 12 hour operation.

Switch S_2 is a single pole double throw, while S_1 is a single pole single throw switch, as are the time setting switches. Power from the ac line comes from a wall plug transformer.

There are only two critical procedures in putting this clock into operation: adjusting the oscillator for 60 Hz and syncing the digit enables of the two clock chips.

The oscillator can be adjusted by any of several methods: The 60 Hz can be beat against the line frequency, a scope set to line triggering can be used, and the frequency adjusted until a stable wave form is obtained, or a frequency counter can be used. If none of the above is available the clock can be run against a known standard and adjusted until it matches.

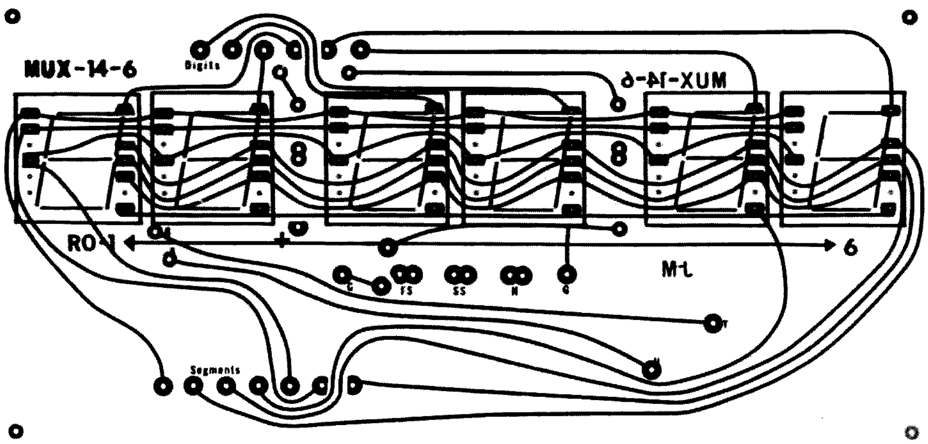

Fig. 5. Readout board (full size).

To synchronize the digit enable lines it is necessary to disconnect all power from the clock including the standby 9 V battery and ground the positive side of C2. The ground on the positive side of C2 is removed and the standby battery is now reconnected, then normal power is applied to the clock. If the display is not correct on both clocks, check the 9 V battery's voltage and replace it if it is not above 8.2 V. Repeat the above procedure again.

At this point the only thing left to check is the 10 minute timer. The actual time is related to the timebase and should be 9.6 minutes. Place the reset switch in the reset position and then back to the timer position. Approximately 10 minutes later the display should start blinking and continue to do so until it is reset. The timer can be disabled by leaving the reset switch in the reset position.

This clock, with its unusual features, should provide you with a timepiece usable in many situations and not subject to the annoying time glitches of its line-based brothers. ■

Parts List

You can beg, borrow, steal, scrounge, or otherwise purloin the following parts. Or save time, trouble, and anxiety pains by purchasing the whole kit and kaboodle from Nexus Trading.

C_1	.1 uF disc cap
C_2	250 uF/25 V electrolytic cap
C_3	3-12 pF ceramic trim cap
CX_1	15.36 kHz crystal
D_1-D_6	1N914 or F125
D_7	15 V/400 mW zener – 1N965B
I_1	680 uH inductor
$IC_{1,2}$	MM5314
IC_3	CD4060
IC_4	CD4040
IC_5	CD4012
IC_6	CD4001
Q_1-Q_7	2N3904
Q_8-Q_{13}	2N3906
R_1	4.7M Ohm ¼ Watt
R_2	1 M Ohm ¼ Watt
$R_{3,4}$	10k Ohm ¼ Watt
R_5-R_{11}	24 Ohm ¼ Watt
R_{12}-R_{13}	2k Ohm ¼ Watt
RO_1-RO_6	DL750 (common cathode)
S_1	SPST switch
S_2	SPDT switch
S_3-S_8	SPST push-button switch

by
Robert E. Bloom W6YUY
8622 Rubio Ave.
Sepulveda CA 91343

How Accurate Is Your Counter — Really?

But I can't be off frequency by two kHz. I just calibrated my transceiver with my counter which was just set with WWV! This is a comment most often heard among hams operating 2 meter repeater FM. The resulting dialogue indicates there is much misunderstanding among the ranks as to counter frequency accuracy, how a counter should be calibrated and the relationship with one's transmitter output frequency. This article's intention is to shed light upon the multiple ramifications involved in frequency counter calibration.

A most likely starting point, therefore, is the counter time base oscillator. This usually is comprised of a 100 kHz, 1.0 MHz, 5.0 MHz or 10.0 MHz crystal oscillator which may or may not be temperature stabilized with an oven. Typical time base accuracy may be as good as one part in 10,000,000 ($1/10^7$) or less per 24-hour period. If measurements with reasonable repeatable accuracy are expected, the counter will require a minimum warm-up time of one hour with 24 hours' time being recommended. If the counter is being calibrated to factory specifications, a 24-hour period becomes minimum and 3 months is not unheard of.

A laboratory-type crystal reference oscillator used to calibrate the basic time base oscillator in a counter generally goes not reach its stabilized aging rate until a minimum "ON time" of 3 months. This type of standard has its complete oscillator circuit encased in a heavily constructed double oven (an oven within an oven). The typical size of such an oven may be as small as 8" long and 3" in diameter and ovens twice this size are quite common. Such oscillators, when calibrated against WWVB or WWVL, 60 kHz and 20 kHz, respectively, have accuracies as great as one part in one hundred billion ($1/10^{11}$), with $1/10^{10}$ being typical in a metrology laboratory.

A comment quite often heard by lab technicians and radio amateurs contains the following substance: "I have the audible capability to zero beat a signal emanating from the speaker of my receiver." If this is so, then these individuals have indeed been endowed with a very special human ability . . .

The transmitted accuracy of the N.B.S. (National Bureau of Standards) WWV transmission from Boulder, Colorado is $1/10^{10}$, one part in ten billion. Because of signal path distortions, however, the accuracy is degraded by about two orders of magnitude or possibly more. This is known as "The Doppler Shift." The received accuracy is now $1/10^8$ or less. Under the most optimum of receiving conditions and using the best calibration techniques, including an overall time period of 6 weeks for the daily corrections of the crystal oscillator frequency, one could achieve a counter time base accuracy of one part in 10^7 or .00001%.

Reference laboratories on the other hand do not use the WWV transmission

frequencies of 2.5, 5.0, 10.0 or 15.0 MHz because of the limited accuracies available. The low frequency transmissions of WWVB and WWVL are used as they are not subject to the same types of transmission frequency distortions. In addition they can be and are transmitted with much higher accuracies. The transmitter oscillators of WWVB and WWVL do not use crystals. They are controlled by atomic references.

The Cesium Beam standard is an atomic resonant device which provides access to one of Earth's invariant frequencies in accord with the principles of quantum mechanics. It is a true primary reference and requires no other reference for calibration. A cesium atomic beam resonator controlled oscillator is used and is the nation's primary frequency reference. The accuracy of transmission is $1/10^{13}$, one part in ten trillion.

Time and frequency are intangible quantities which can be measured only with respect to some physical quantity. The basic unit of time, the second, is defined as the duration of 9,192,631,770 periods of transition within the cesium atom.

The transmissions of WWVB on 60 kHz are intercepted on receiving equipment of very narrow bandwidth, usually a few Hz wide. The time interval between a local reference oscillator and the frequency of WWVB are compared minute by minute on a strip chart recorder which records the phase differences. The resolution of this comparison is typically 1 us. One part in 10^{10} takes 10^4 sec. to achieve a 1 usec. error (somewhat less than 3 hours).

The transmission of WWVB is coded in the binary coded decimal system. The characters are formed by variations of the carrier in ± 10 dB levels. This presents time-of-year information each minute: the minute, hour, day of the year and the millisecond difference between the broadcast signal and UT2 time.

Universal time, defined as UT time, is the time of day on earth. UT time varies with the variations of the earth's rotation. UT2 time is one of a number of offset times used to correct for seasonal variations in the earth's rotation. These variations are caused by displacement of matter in and over the earth's surface.

Other devices of interest as frequency standards are the Thallium beam, the Ammonia maser, the Hydrogen maser and the Rubidium gas maser. The Rubidium vapor reference standard uses a passive resonator to stabilize a quartz oscillator. It is considered a secondary standard because it must be initially calibrated against a primary standard such as a Cesium Beam. Once adjusted and sealed, the frequency remains superfinely stable and the frequency accuracy is within parts in 12^{12}.

The crystal oscillator, although not the most stable, is still the most economically available to the ham. It is also compact in size and fits easily into the geometry of a compact frequency counter. The frequency counter does have a number of inaccuracies and the crystal reference frequency oscillator is the major one.

The crystal is the time reference base for a divider chain which basically sets up start and stop trigger pulses in the counter. The counter has a number of these, 1 Hz, 10 Hz and 1 kHz being typical. Besides the time base inaccuracy there is also an inherent trigger error which causes a ± 1 count in the readout. The crystal when first turned on has a large drift error. This is overcome by use of an oven and a warm-up period. Thereafter the crystal has an aging rate. This is a constant periodic upward change in frequency with time. All crystals have it. After about 90 days of ON time this rate becomes quite predictable and can be compensated for if the oscillator is equipped with a dial capable of a 1,000 to 1 or better resolution. On the finer laboratory oscillators this vernier readout can be related to time in microseconds.

One does not expect the average ham either to possess the accurate equipment usually found in a metrology laboratory or to apply the techniques necessary for such accuracy. The awareness that such equipment does exist, however, sheds light upon what is required to make accurate calibrations . . .

The average ham is most apt to set up the counter's reference oscillator by zero beating the counter's time base reference oscillator against WWV's high frequency transmissions. This is generally performed aurally after a warm-up period of 1-5 hours. Most often, the inexperienced ham may wind up by beating against the audio of the transmitted signal in which case the crystal will be set to the wrong frequency. WWV usually uses 440 Hz for a period during the hour, then shifts to 600 Hz. If the oscillator has been zero beat to one of these, the error will become apparent when the modulation frequency is changed as the apparent zero beat will have disappeared.

A comment quite often heard by lab technicians and radio amateurs contains the following substance: "I have the audible capability to zero beat a signal emanating from the speaker of my receiver." If this is so, then these individuals have indeed been endowed with a very special human ability, especially when one considers that the human ear cannot hear frequencies below 30 Hz regardless of their amplitude. This also brings into view the necessary unusual hi-fi characteristics required of the receiver's output transformer which probably does not respond below 100 Hz – to say nothing of the speaker response. What one actually is hearing is a difference in the amplitude in the noise frequencies accompanying the signal.

One does not expect the average ham either to possess the accurate equipment usually found in a metrology laboratory or to apply the techniques necessary for such accuracy. The awareness that such equipment does exist, however, sheds light upon what is required to make accurate calibrations. It, therefore, follows that if it is not practical for the amateur to make time interval measurements on the time base generator of a counter and the follow-up corrections in time and frequency, then it also is not reasonable that the amateur expect to have time base frequency accuracy to within $1/10^7$. A more reasonable accuracy level can be expected by following certain ground rules. Allow a 5 hour minimum warm-up time if the equipment uses an oven, 1 hour if not; the time base generator (crystal) should be calibrated by use of a null detector against one of WWV's higher frequency signals, and the intended measurements with the counter be executed as soon

thereafter as practicable. Expected accuracy will be in parts per million or slightly better of the WWV referenced frequency.

A recommended procedure that affords quite good zero beat capability and is readily available to most radio amateurs is as follows:

1. Tune in the WWV frequency to be used. The reception of the signal should be free of fading.

2. The oscillator signal to be calibrated should be coupled so that its amplitude closely equals that of the incoming WWV carrier level.

3. Zero beat aurally as closely as possible, then continue refining the adjustment while observing the receiver "S" meter indication. As zero beat is achieved the "S" meter will reach either a maximum or minimum stabilized indication. This reading will be maximum if both signals are of the same phase relationship or minimum if the phase is out by 180 degrees. It is of little concern which is obtained just so the meter needle has stabilized its position.

If the crystal is of high stability quality and is in an oven, one might want further refinement in the long-term stability capability. In such case it will be required that the crystal oscillator be left on continuously. Further refinements in the zero beat setting will be required each 24 hours, first to correct for the initial phase error setting and then to correct for the crystal aging rate. These further refinements could result in parts in 10^7 accuracy.

Note: For long-term stability a 1.0 MHz or higher crystal is recommended. Zero beat becomes more difficult the higher the WWV referenced frequency. This follows because the resolution of adjustment is reduced and you are working to a finer tolerance.

Assume that the received signal is accurate to 1 part in a million ($\pm 10^{-6}$) and that the adjustment you have just made was set to zero beat with $\pm 10^{-6}$ of the received signal. This will produce a short-term accuracy of $\pm 2/10^6$ Hz. Therefore one can set a 147.00 MHz transceiver frequency to an accuracy of ± 294 Hz depending on which side of the WWV carrier frequency you are zeroed in on. This accuracy will decay with time elapse between the act of calibration and use of the counter.

The above happens to be the hard core truth and should start spinning the mental wheels of those who wonder why they are 2.0 kHz off the center of the repeater bandpass.

For the ham fortunate enough to have the means to perform more accurate measurements, the following is supplied.

1. Counter minimum ON time: 90 days.

2. Compute oscillator drift rate for single measurement spans. The average fractional error of frequency is equal to the fractional time error which is given by:

$$\frac{\Delta f}{f} = \frac{t_2 - t_1}{T}$$

Where

$\frac{\Delta f}{f}$ = Average frequency error.

t_1 = Initial time comparison reading.

t_2 = Final time comparison reading.

T = Elapsed time between readings.

Example (Time comparison reading at 9 am May 1 = 4.64 ms. A reading on 9 am May 4 = 1.70 ms.):

$$\frac{\Delta f}{f} = \frac{4.64\text{ ms} - 1.70\text{ ms}}{3\text{ days}} \times$$

$$\frac{1\text{ day}}{8.64 \times 10^7} = \frac{2.94}{3 \times 9/74 \times 10^7}$$

$$= \frac{29.4}{25.92 \times 10^6} = \frac{1.19}{10^6} \text{ or}$$

$$1.19/10^6$$

That is, the average oscillator error during this period (or assuming a constant frequency drift, the instantaneous error at 9:00 am on May 2) is 1.19 parts per million high. The average frequency of the oscillator during this measurement interval is given by:

$$f\text{ av} = f\text{ nom.} \left(1 + \frac{\Delta f}{f}\right)$$

Where

f av = Average frequency.

f nom. = Normal Oscillator frequency.

$\frac{\Delta f}{f}$ = Average frequency error.

Thus, continuing with the above example and an oscillator with a nominal frequency of 1.0 MHz,

$$f\text{ av} = 10^6 \left(1 + \frac{1.19}{10^6}\right) =$$

$$1{,}000{,}000.119\text{ Hz}$$

Using this method of continuous corrections and recording continuous data one is able to iron out the propagation anomalies of WWV and approach a precision better than 1 part in 10^8. Now with this background behind you — do I hear someone questioning the accuracy of the local repeater frequency??? ■

LETTERS

from page 14

to the 13+ tape, and I found out that the hard way isn't so hard after all. I simply sat down with the faster tape and copied as much of it as I could. At first this wasn't much, and I got very frustrated, but as time went on, I found I was copying several code groups in a row . . . then a solid minute . . . and finally copying it almost solid.

I would like to take this opportunity to publicly thank Jim WB2EDW, who provided an enormous amount of help for me in getting the theory together for the Advanced test. There really are hams around who are willing to help other people with code and theory, and Jim is one of them. (He and his wife, Kathy, also gave me a very good Thanksgiving dinner!) I'd also like to thank Dave WA2CLS for his help.

Finally, I'd like to ask for some help. In 1958 Jim Lev K6DGX administered the Technician test to me (after having shepherded me through the Novice license). I've tried to write to him, but apparently he is no longer at his callbook QTH. Will you please print my address with this, so that if Jim reads it he can contact me, or if anyone else who knows Jim reads it they can either tell him about it or write to me with Jim's QTH? Thanks.

Paul Busby ex-K5QJL, K9ZEM
Box 613
Grand Central Station
New York NY 10017

KH-1B

I am looking for a schematic for a KH-1B keyer or information on how to hook it to a Viking Valiant.

Joe Robidoux WN1UDU
829 Lebanon Hill
Southbridge MA 01550

SOCIAL EVENTS

TOWSON MD
APR 4

The Greater Baltimore Hamboree will be held April 4, 1976 at 8 am at the Calvert Hall College, Goucher Blvd. and LaSalle Road, Towson MD 21204. (One mile south of exit 28, Beltway-Interstate 695). Food service, prizes, contests and a giant flea market. 250 tables inside gym. Registration $2. Over 1000 attended last year. Information: Contact Brother Gerald Malseed at school address or call 301-825-4266.

DAYTON OH
APRIL 23

The 7th Annual F.M. BASH will be held on the Friday night of Dayton Hamvention April 23, 1976 at the Dayton Biltmore Towers (hotel) in the downtown area. This new location will accommodate the ever-increasing crowd and will allow a leisurely social evening and a live floor show, featuring television personality Rob Reider (WA8GFF) and his group. Admission is free to all hams and their ladies, and includes free snacks and a C.O.D. bar. A fabulous prize drawing at 11 pm includes a Clegg FM-DX transceiver. Hours are from 9 pm til midnight. Miami Valley F.M. Ass'n., Milt Kohl W8SLY.

GRAND RAPIDS MI
APRIL 24

The 2nd Annual Swap and Shop will be held Saturday, April 24, 1976, 9 am to 5 pm in the auditorium at Woodland Mall on East 28th Street in Grand Rapids, Michigan (corner of M11 and M44). Featured will be ham equipment, electronic parts, monitors and CB. Admission $1.50. For further information write: Grand Rapids REACT Inc., PO Box 2402, Grand Rapids, Michigan 49501.

SULLIVAN IL
APRIL 25

The Moultrie Amateur Radio Klub announces its 15th Annual Hamfest at the American Legion Pavilion in Wyman Park, Sullivan, Illinois on the 25th of April, 1976. Rain or shine, same place as always.

AMBOY IL
APRIL 25

The Rock River Hamfest will be held April 25, 1976, Amboy, Illinois Lee Co. 4-H Center Jct. 30 & 52. Same place as last year. $1 advance, gate $2, write Carl Karlson W9ECF, PO Box 99, Nachusa, Illinois 61057. Rain or shine — indoor or out, camping, large swap shop, food, and many prizes. Short trip west of Chicago. Talk-in 146.94.

CADILLAC MI
MAY 1

The Wexaukee Amateur Radio Association announces their 16th Annual Swap-Shop and Eyeball that will be held May 1st in the National Guard Armory in Cadillac, Michigan, starting at 9 am. This Swap-Shop is open to all radio amateurs, citizens banders, and anyone interested in radio communications. Lunches will be available at noon and there is lots of free parking. Tickets available at the door.

Oscar Orbits

TM

Oscar 6 Orbital Information					Oscar 7 Orbital Information			
Orbit	Date (Apr)	Time (GMT)	Longitude of Eq. Crossing °W	Mode	Orbit	Date (Apr)	Time (GMT)	Longitude of Eq. Crossing °W
15820	1	0043:08	65.4	B	6293	1	0008:55	52.0
15833	2	0138:04	79.1	A	6306	2	0103:12	65.6
15845	3	0038:00	64.1	B	6318	3	0002:32	50.4
15858	4	0132:56	77.8	A	6331	4	0056:49	64.0
15870	5	0032:52	62.8	B	6344	5	0151:06	77.6
15883	6	0127:47	76.6	A	6356	6	0050:26	62.4
15895	7	0027:43	61.6	BX	6369	7	0144:43	76.0
15908	8	0122:39	75.3	A	6381	8	0044:04	60.8
15920	9	0022:35	60.3	B	6394	9	0138:21	74.4
15933	10	0117:31	74.1	A	6406	10	0037:41	59.2
15945	11	0017:27	59.1	B	6419	11	0131:58	72.8
15958	12	0112:22	72.8	A	6431	12	0031:18	57.6
15970	13	0012:18	57.8	B	6444	13	0125:35	71.2
15983	14	0107:14	71.6	AX	6456	14	0024:55	56.0
15995	15	0007:10	56.6	B	6469	15	0119:12	69.6
16008	16	0102:06	70.3	A	6481	16	0018:33	54.4
16020	17	0002:02	55.3	B	6494	17	0112:50	68.0
16033	18	0056:57	69.1	A	6506	18	0012:10	52.8
16046	19	0151:53	82.8	B	6519	19	0106:27	66.4
16058	20	0051:49	67.8	A	6531	20	0005:47	51.2
16071	21	0146:45	81.6	BX	6544	21	0100:04	64.8
16083	22	0046:41	66.5	A	6557	22	0154:21	78.4
16096	23	0141:37	80.3	B	6569	23	0053:41	63.2
16108	24	0041:33	65.3	A	6582	24	0147:58	76.8
16121	25	0136:28	79.0	B	6594	25	0047:19	61.6
16133	26	0036:24	64.0	A	6607	26	0141:36	75.2
16146	27	0131:20	77.8	B	6619	27	0040:56	60.0
16158	28	0031:16	62.8	AX	6632	28	0135:13	73.6
16171	29	0126:12	76.5	B	6644	29	0034:33	58.4
16183	30	0026:08	61.5	A	6657	30	0128:50	72.0

CONTESTS

from page 32

BARC CONTEST

Phone: Starts: 0001 GMT, Saturday, April 24; Ends: 0200 GMT; Sunday, April 25; CW: Starts: 0001 GMT, Saturday, May 8; Ends: 0200 GMT, Sunday, May 9

Any number of transmitters/receivers will be allowed. However, all stations participating must be single operator only. All contestants must operate from their own private residence or property. North America and United Kingdom winners are ineligible for a period of two years, regardless of section won. Use all amateur bands from 80 to 10 meters. No crossband or crossmode contacts will be permitted.

US and Canadian stations may contact UK and VP9 stations only. UK stations may contact US, Canadian, and Bermuda stations only. UK stations are requested to use the official RSGB counties list and abbreviations to avoid confusion.

EXCHANGE:
RS(T) and state, province, UK county or Bermuda parish.

SCORING:
Each completed contact counts 3 points. The multiplier for all stations outside Bermuda is the total number of different VP9 callsigns worked on each band. For Bermuda stations the multiplier is the total number of states, provinces, and UK counties worked on each band. The final score is the sum of all QSO points times the total multiplier.

LOGS:
All dates and times must be in GMT and all contestants must compute their own scores and check logs for duplicate contacts. Include a signed statement that all contest rules and license terms have been complied with. Please print your name, call and address on each page of your log. All logs must be received by the Contest Committee, Radio Society of Bermuda, PO Box 275, Hamilton 5, Bermuda — not later than June 30, 1976.

AWARDS:
A trophy will be awarded to the phone and CW winners in North America and United Kingdom. Round trip air transportation plus one week's accommodation at the Sonesta Beach Hotel will be provided to overseas winners to enable them to receive their awards at the Radio Society of Bermuda's Annual Banquet to be held on October 21, 1976.

HELVETIA 22 CONTEST

Starts: 1500 GMT, Saturday, May 1; Ends: 1700 GMT, Sunday, May 2

Use all bands, 160 to 10 meters, CW to CW or phone to phone; no cross-mode contacts.

EXCHANGE:
RS(T) and 3 figure serial number from 001. Swiss stations will also send the abbreviation of their canton. Abbreviations of the 22 cantons are: AG, AR, BE, BS, FR, GE, GL, GR, LU, NE, NW, SG, SH, SO, SZ, TG, TI, UR, VD, VS, ZG, ZH.

SCORING:
Each contact with a HB station counts 3 points. Each station can be worked once per band, either on CW or phone. The multiplier is the sum of Swiss cantons worked on each band, making a possible multiplier of 22 per band. Your final score will be the sum of QSO points multiplied by the sum of cantons worked on each band.

AWARDS:
Certificates will be given to the highest scorer in each country. USA and Canadian call areas are considered as separate countries.

LOGS:
Logs must be postmarked not later than 30 days after the contest and sent to: TM USKA, Rene Oehninger HB9AHA, 5707 Seengen/AG, Switzerland. Send QSLs for each of the 22 cantons worked on CW or phone for the Helvetia 22 Award to: Blattner Walter HB9ALF, President USKA, via B. Varenna 85, 6604 Locarno, Switzerland.

MASSACHUSETTS BICENTENNIAL QSO PARTY

Starts: 0000 GMT, Saturday, May 1; Ends: 2400 GMT, Sunday, May 2

The contest is sponsored by the South Shore Repeater Association, WR1ACT, of Scituate MA and is endorsed by the Mass. Bicentennial Commission. Any station may be worked once per band; CW and phone are considered separate bands. No crossband or repeater contacts are permitted. MA stations may work other MA stations.

FREQUENCIES.
Phone: 1820, 3960, 7260, 14290, 21390, 28590, 50.110, 146.52. CW: 1810, 3560, 7060, 14060, 21060, 28060. Novice: 3720, 7120, 21120, 28120.

EXCHANGE:
RS(T) and county for MA or ARRL section/country for others.

SCORING:
Each completed QSO counts 2 points. Outside stations multiply total QSO points by total number of different MA counties (max 14) worked. MA stations multiply total QSO points by the number of MA counties plus ARRL sections (not EMASS or WMASS) and DXCC countries worked.

AWARDS:
Distinctive awards will be given along with a certificate for working all MA counties. Separate awards will be given for VHF bands.

ENTRIES:
Mailing deadline is July 15, 1976 and should be sent to: R. J. Doherty W1GDB, RFD =1, 14 Pine Street, Sandwich MA 02563. Include an SASE for results and awards. Decisions of the contest committee are final and logs will become the property of WR1ACT.

NEW PRODUCTS

Lab Science's ECONOTRACE

If you're the kind of person who has to see something to believe it, this new product might be right down your alley. That is, if you test many transistors (and what ham doesn't?). Imagine going through that box of "unknowns" on your bench, and finding out all about them, in just a few minutes. Just plug the device into the "ECONOTRACE," connect three leads to your oscilloscope, and you're ready. One catch: *You* provide the 'scope. Display leakage (ICBO), DC & AC beta, low voltage breakdown, almost anything the big expensive tracers display, according to the manufacturer, Lab Science, PO Box 1972, Boulder CO 80302.

The big advantage is price: the ECONOTRACE sells for $39.50 (plus $1.00 for postage & handling), about a third of the nearest competitor. And it comes completely assembled, ready to operate. One disadvantage: Since it's battery operated, it only tests up to ± 9 volts and ± 90 milliamperes, so it is no good for testing high voltage characteristics. What it is good for is making transistor testing simple and exact (all drives and outputs are calibrated). You can also compare or match devices, just like on the big tracers, with just a flick of a switch. It's also small, 2-7/8 x 4 x 1-7/8 inches, lightweight (10 oz.) and comes complete with its own battery, which lasts for a year. Furthermore, Lab Science offers it on a 30 day, no strings, money-back guarantee, so you too can see it to believe it.

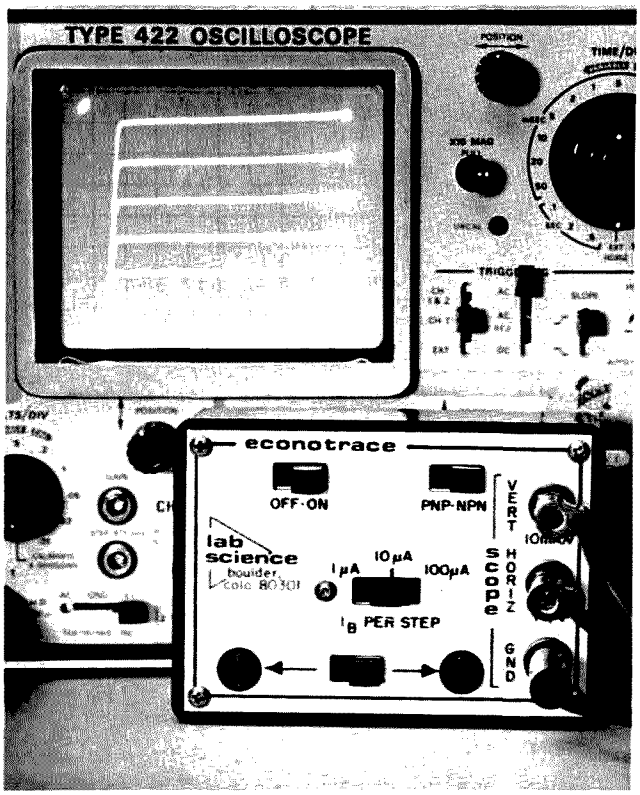

by
David J. Brown W9CGI
RR 5 Box 39
Noblesville IN 46060

Gray Matters

If any of you SSTV enthusiasts have ever been through setting up a monitor or even a camera, then I'm sure you can appreciate the need for a good accurate and stable tone source. Such a source was described as a construction article in the July 1975, *73 Magazine* on page 98. The item was by Dr. Robert Suding WØLMD, and was just too good to pass up. The ICs totalled up to $7.60 in a recent magazine ad, including the power supply regulator IC – typical of the low cost of TTL-ICs these days.

After I built this amazing little tone source that gives all the tones required for SSTV, and RTTY to boot, I was then tempted to make it even more useful to my needs in building my first monitor. I started building the monitor just for copying the weather satellites, but I have included all the normal SSTV parts in order to set it up and maybe even tune in on all the SSTV these days (on Oscar even!). The following is a small adapter to allow you to use the WØLMD tone source to produce an automatic gray scale for setting up your SSTV projects very accurately (see Fig. 1).

Circuit Changes

The adapter requires you to acquire 5 more ICs at first glance, which from a source like that used above (typical) runs a total of $2.03. Also, you will have to increase the current rating on the transformer used in the original article to 1 Amp. That is the only change to the original power supply. The only change to the rest of the original tone source is to change the control switch marked "Frequency Selector."

Dr. Suding was kind enough to do his frequency changing by only switching around a +5 V source, and therefore I was able to change to automatic switching very easily (see Fig. 2). If you will check the schematic of the adapter in the area of Q1, you will see this is only a simple "electronic switch" with discrete diode or gating. This replaces the original manual switching when the "gray scale pattern" mode of operation is chosen. The original switch called for a single pole (usually a single deck rotary) eleven position switch. Since these are usually twelve position switches anyway, the position 12 can be used for the new manual control switch by getting one with two decks. One deck switches ground around, and the other switches the +5 V, and the two levels control all switching while maintaining the original eleven discrete frequencies.

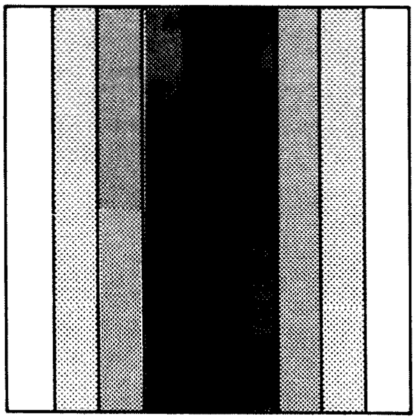

Fig. 1.

Fig. 3 is shown as a slide type switch only for clarity. Obviously, double pole or single pole individual switches could have been used for each position, but this allows the possibility of two on at once which can produce really weird results in this type of device. A twelve position, two deck rotary switch was used in my adapter. If you are building the original and the adapter as an SSTV only generator, some ICs may be deleted as pointed out.

In order to explain my adapter and the original circuit as it applies to my adapter, let me explain the terminology I have used. Since the ICs were not numbered in the original article, I will refer to them as follows:

1. Counters, #1, #2, #3 are the 74193 ICs left to right in the original article Fig. 1.
2. IC "1200," IC "1500," etc., are the gates identified by those numbers near their outputs. (Caution: The frequency found at these points is actually 2X that marked there.)
3. IC "SSTV" is the left 7430 with SSTV frequencies entering it, and IC "RTTY" is the right 7430 with RTTY frequencies entering.
4. The remaining ICs if mentioned are "final gate" for the 7402, and "output divider" for the last 7473.

Circuit Description

First let us decide what ICs can be removed from the original article should you decide to want an SSTV unit only. All 7430 ICs used on RTTY frequencies can go, i.e., IC "1445," IC "2295," IC "2975," and IC

"RTTY." Tie pin 5 to pin 6 on the IC "final gate" 7402. The 7402 has four gates, leaving two not used. IC "1275" and IC "2125" cannot be eliminated as they are part of IC "1500" used in SSTV, but just do not wire them up. This frees up two 3-input NAND gates, to be used differently.

With the extra ICs now eliminated, those retained in part can be wired as follows. First, use part of the 7410 as IC-20 in the adapter using the pins shown in my Fig. 2. Next, the gates I have shown as IC-19 (used as inverters) can be wired up using the extra two gates in the "final gate" 7402. Use the pins shown in Fig. 2 under "OPTION 7402." This has already eliminated two of the ICs I said you would have to buy. One more trick occurs. You can eliminate buying IC-21, a 7473, as well! This and the use of the 7402 unused gates are true whether you go SSTV only or keep the RTTY. This is due to the fact that only half of the 7473 is used in the original article as well. The pin numbers I have given for IC-21 in Fig. 2 allow you to use the other half. That drives the cost of the SSTV only unit down to buying a 7493 and a 7445, and only an additional 7410 for the SSTV/RTTY version ($1.53 or $1.71 respectively). It almost doesn't pay to leave off the adapter!

Now, following the signal through the unit, a 15 Hz square wave or pulse at TTL levels is fed from the monitor, camera or timebase you are using to the 15 Hz input point to IC-17, a 7493 pin 14. A word is required here, as you are probably used to seeing a decade encoder (7490) type IC driving a decade decoder (7445). The 7493 and some gating is used instead to allow very accurate width control to sync width on the gray scale pattern. The normal scan used in SSTV is a 5 ms scan and 1.6 ms sync and retrace period for the 15 Hz standard. This long sync allows for noise "masking" part of sync, etc., and is used much like the automatic line return on RTTY to insure a new line is in step with new information and not skewed. The 15 Hz standard yields a 120 lines times a 6.66 ... ms per line, or 8 second vertical period. With a ten line decoder it is convenient to use a nine or ten vertical stripe pattern, and I chose nine for two reasons. First it allows the generation of a 2300-2100-1900-1700-1500-1700-1900-2100-2300 format, nine stripe white to black to white pattern per Fig. 1. Since sync is "blacker-than-black," you can check your white to black transition response of filters, amps, etc., using the last bar. The use of the white and black bars for setting those levels is obvious and the same as a black or white only generator. Position "0" is left blank, and going to bar #1, white, will show both your overall response to noise in the filters, amps, etc., and another "rather" black to white transition. This is the sneaky reason for using a more than ten position encoder.

As the 15 Hz enters the encoder (counter), the encoder advances the decoder from "0" to the "1" to "9" positions producing the gray scale by gating on the proper tones via the electronic switches. The encoder then goes to position "10." As it leaves "9," that line going high again drives the output of IC-19 pin 6 low. That fall sets the J-K, IC-21, to a high on the Q output, and a low on the not Q pin 8 output that I used. That low turns on Q6 and the 1200 Hz sync tone. The encoder proceeds to positions "11" and "12." The decoder does not recognize any of the 10, 11 and 12 BCD inputs, so all the lines 0-9 stay high. As the encoder tries to go to "13," the BCD (binary really) output of the encoder 7493 is as follows: A = high, B = low, C = high, D = high. The A, C and D lines of the encoder are tied to inputs of a gate, IC-20, and when all are high as in position 13, the output of IC-20 pin 6 goes low. This low is used to pin 6 of IC-21, resetting it and turning off the sync tone after three positions of sync (10-11-12). The same low is sent to IC-19 used as an inverter. The high out from this inverter resets IC-17 encoder, and the entire cycle begins all over.

Using this arrangement, the width control on the monitor is used to set up the "0" noise position on the left edge of the screen, and the "black" of sync on the right edge. Since the minimum hardware was my idea from the start, you may see where as much as one line can be out of sync with the monitor, and this is quite true. The first sync tone puts everything in order, however, and this was not thought to be much of a

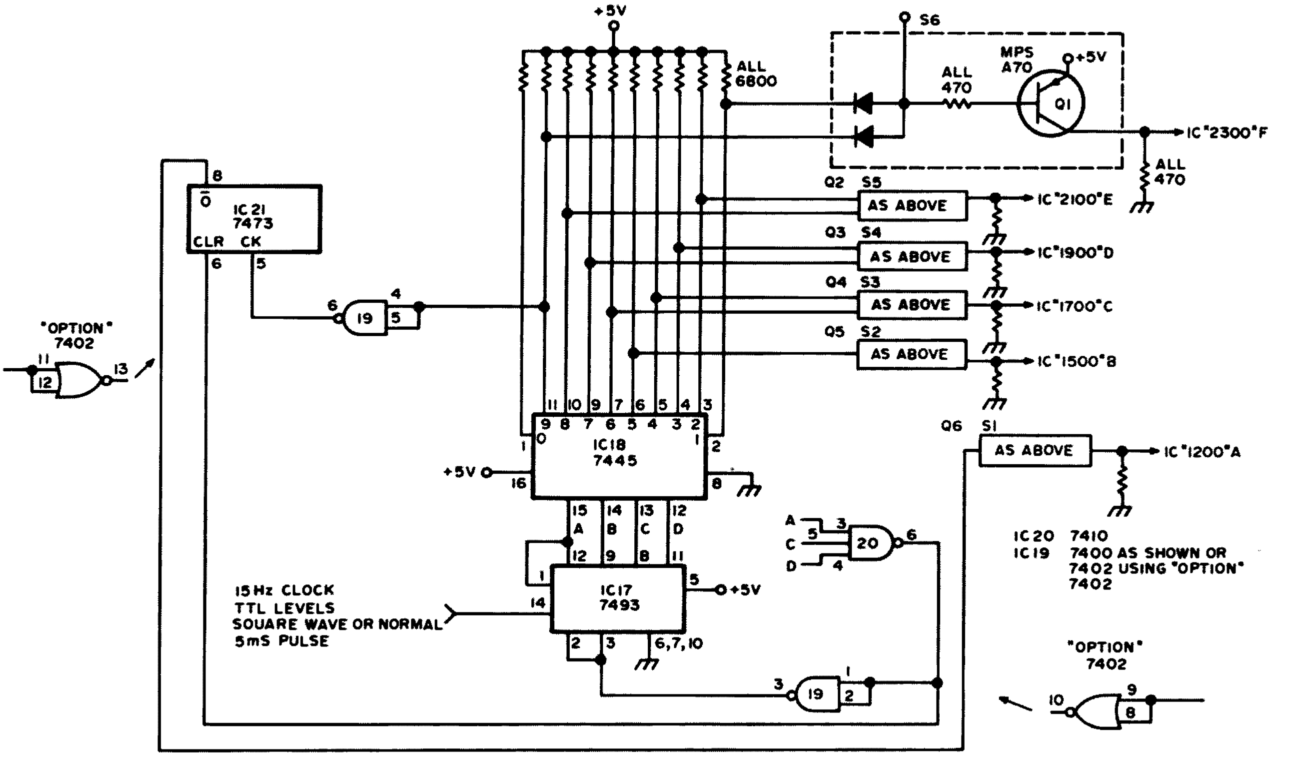

Fig. 2.

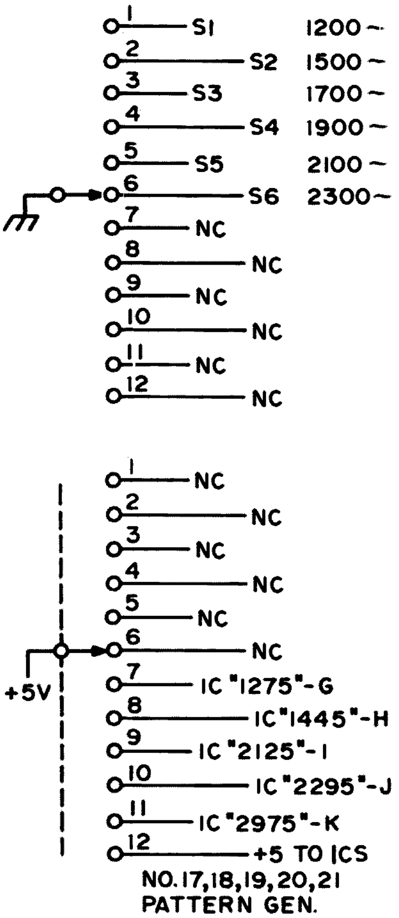

Fig. 3.

problem. In fact, I noticed it following the diagram through, and not in practice to begin with.

Using the adapter as shown, other variations are possible. The most obvious is perhaps to feed the one-per-eight second vertical sync to the 15 Hz input point and you have a white to black to white scan occurring at a one level per field rate, including one of no input. This works if the vertical sync provides your monitor with a return to start and follow new field capability (automatic retrace). Another easy use occurs if you want black/white stripes instead of gray scale. Instead of hooking the diodes up as shown, or by switching them around with a switch, the diodes can be hooked up as all decoder positions odd (1-3-5-7-9) go to electronic switch Q1 (2300 Hz), and all decoder even positions except "0" (2-4-6-8) go to electronic switch Q5 (1500 Hz). Leaving all else the same will give you a wh-blk-wh-blk-wh-blk-wh-blk-wh pattern or alternating white and black stripes. With a bit more tricky gating you can even get a checkerboard out of that one, but more on it later. By feeding the 15 Hz source to a simple divide by ten (7490) and the resulting 1.5 Hz to the 15 Hz input, a horizontal gray scale of sorts results. These latter patterns may not be in sync at first either, of course, for the same reason as the one line problem, but after one sync period all straightens out. Remember to feed the internal horizontal sync to the monitor when doing the vertical tricks, or very strange things happen. Think about it!

As to adapting the adapter, several cute tricks have been tried. I highly recommend you read also the article "Slow Scan TV Test Generator" by Bert Kelley K4EEU in *Ham Radio* (you know – the other mag – hi), July 1973, page 6. This was a TTL device also, and by feeding 2300, 1500 and 1200 Hz in proper timing into the circles lettered E, C and H, and then doing away with all of U1 and the half of U2 used as the sync oscillator, and not using ICs U9, U10 and U11, you can produce vertical, horizontal and checkerboard. The article will provide you with an H and V sync source if you are building a monitor or can't get to yours in a commercial version, and the filter at the end produces a pretty good sine wave in place of the square wave out of the WØLMD device. WØLMD mentions the filtering required, but did not include any, so I have shown the K4EEU filter as my Fig. 4. The 88 mH coils are the familiar telephone toroids and I included Bert's source hoping it is still valid. Several sources exist as I'm sure you are aware. *Don't* run to a transmitter without some filter or you may just regret it. Square waves contain rich hormonics FAR out into the beyond audio range, and TTL square waves seem to strive to get all of them – hi. A word to the wise?

Construction

Construction will vary with the builder as always, and the amount of parts hardly warranted a separate circuit board. I wired mine right into the original article using a particular type of perfboard that has the patterns for ICs and strips out from each pin and then hard wired the interconnects. It really doesn't take long if you use some logic to wire the logic (no pun intended). Wire +V, grounds, all 2048 leads, etc., and use a yellow pencil to mark out what you have done on a copy of the schematic. Construction is not critical, just time-consuming.

For those of you who have not already thought of it, by running three more 74193s from the same crystal source, using another 7410 to decode "1500" just as IC "1500" is wired, and using a divide by 2 (7473) to get a very accurate 1500 Hz just as the article did, but independent from it, you can add two simple divide by ten (7490) ICs and come up with a very accurate 15 Hz source. Another divide by 12 (7492) and divide by ten (7490) IC, just as in the K4EEU article, followed by 5 ms and 30 ms one shots (74121), and you get a very accurate one per eight second vertical sync source. With this you become the neighborhood SSTV "standard." For those of you who like accuracy or as a club project for membership use, this is only $6.52 more in ICs!! I tried it and like it so I'll pass it along, since it does not affect the rest of the operation at all. I'm building all of this into a deluxe monitor with built-in checks, so it comes out pretty cheap (common supply, cabinet, etc.). Use the third lead of the 7410 in the added divider chain to control on/off of this timebase. A +5 V applied to the original terminal "B" turns on and off both horizontal and vertical outputs from this timebase.

An SASE gets all the answers I can provide. Please try to be specific as to what you have/don't have, and where. Please address all questions about the original tone generator to the author. I almost became a K2OAW frequency counter expert (unknown drip under pressure!) over my follow-up "Garnishing a Counter" article, and it is not fair to the original author if I have to quiz him to get an answer, then relay it to you. Comments or further ideas regarding the original or my adapter are, however, very welcome if you send the author a copy for his use, too. We all can learn from these adventures – me, too! It's just not fair for me to get the credit, and sometimes be forced to give advice that may not agree with the author's original intent, such as known limitations, etc.

Have fun using your "gray matter" (source of infinite wisdom located – I'm told – somewhere between the ears) and your "Gray Matter" (scale) source. It sure is handy. ■

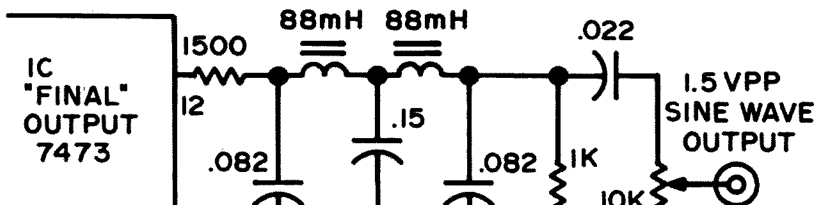

Fig. 4. Toroid source: M. Weinschenker, Box 353, Irwin PA 15642; 5 toroids for $2.00, postpaid.

David F. Miller K9POX
7462 W. Lawler Ave.
Niles IL 60648

TR-22 Tips

As implied by the title, this article concerns tips directly applicable to the Drake TR-22 2-meter FM transceiver, but many hams (being the innovators that they are) will see value in applying these tips toward other rigs of similar design. Each of these tips has been tried and tested by the author and is workable; furthermore, none will detract from the appearance, operations, or re-sale value of the "stock" TR-22. Sound too good to be true? Please read on and judge for yourself.

The first tip has to do with knowing when your TR-22 is on or off. Maybe this has never been a problem for you...yet. It was for me one day when I accidently left mine on with no antenna connected and squelch fairly tight. The squelch on these radios is excellent, so good in fact, that it is impossible to tell if the rig is on or not unless a signal of sufficient strength is present to break the squelch. The only way you will know that is when the battery pack has run down enough to break the squelch by itself and at that point the batteries are dangerously low. Remember what Peter Stark K2OAW said about nicads in his excellent article in December 74, *73 Magazine*? My TR-22 on-off indicator is a jumbo diffused red LED (light emitting diode) with an appropriate series current limiting resistor. The LED can be run at fairly low light output (which is also low current drain) and still be effective in its purpose. I am using a 390 Ohm, ½ watt resistor in series with the LED and end up with

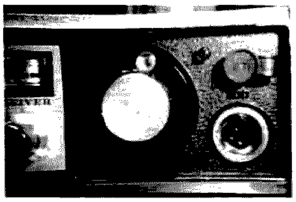

Light Emitting Diode on front panel.

about 25 mA additional current drain from the batteries. Normal TR-22 receive current drain under squelched conditions is about 45 mA and will peak to 100 mA or so depending upon the setting of the volume control when audio is present. Since the "stock" batteries are 450 MAH units, I felt that the additional 25 mA drawn by the LED was

Broom holder for use as mike clip.

well worth the added protection. By the way, it has been my experience that not all surplus LEDs give out the same amount of light output per current input. You may very well find that you can increase the series resistor (lower the battery drain) by picking and choosing thru several LEDs which I did in the first place.

I located my on-off LED in the upper right-hand open area of the front panel just to the left of the earphone jack, and it looks like "it come outa da box that way." See photo. One 3/16" dia. hole is all that is needed for mounting, but first drill a smaller pilot hole and loosely place masking tape around where the drill will come thru the rear of the panel to catch the filings. Once the LED fits nicely and the hole has been de-burred both sides, a couple of drops of epoxy will hold it in place forever (thank goodness LEDs last that long).

The wiring is easy, only two connections to the TR-22 are needed and one is right next to the LED. The easiest place to pick up ground is from the "sleeve" or outer connection of the earphone jack. The negative (cathode or flatted side of the LED) is connected to this ground thru the 390 Ohm, ½ watt resistor. The positive (anode) of the LED is connected to switched hot 12 VDC; I ran a red wire to point "B" on the receive board which is located at the center rear of that board and is clearly marked. Just wrap the tined end of your wire right around point "B" and solder (no need to remove boards, etc.). That's all there is to it. Go into the nearest closet, raise someone on the local repeater, and tell him at length how great it is to be able to fill out your log by the light of an LED. You will now be able to tell at a glance if your TR-22 is on or off and even if the batteries are

starting to drop off (with experience of course).

Tip number two has to do with adapting a heliflex (rubber ducky) antenna to the TR-22 so that the ducky comes out the top instead of the bottom (ever try to set your TR-22 down on a table with the PL-259 type ducky coming out the bottom?). The first problem here is to not, repeat NOT destroy or in any way modify the existing telescoping whip antenna. Impossible? No, just a little ham ingenuity. I cut the PL-259 connector off of my ducky leaving enough metal at the base to deftly solder on a metal plate cap from an old color TV set which just happens to fit over the conical tip of the existing TR-22 "stock" whip antenna. A piece of heat-shrink tubing over the exposed metal sealed the job from accidental contact with anything else metal. It works like a charm, well, like any rubber ducky works like a charm. Don't fret about the length of telescoped whip inside the metal TR-22 case which now just acts like a piece of transmission line, because it now just acts like a piece of transmission line (at least it's terminated which is more than you can say when using the ducky on the rear connector).

The third tip involves the microphone holder supplied with the TR-22. My TR-22 is the earlier model with the slim pencil mic (which I really like but it can no longer be purchased from Drake). The original mic holder was a plastic cable harness clip which broke instantly (or almost so). I purchased some "C" shaped metal broom holders from the hardware store (you know the type that fasten to the wall and a broom handle can be snapped in), gave one a coat of polyurethane varnish, drilled and tapped a single 10-24 hole in the TR-22 case on the right side midway in both dimensions, and fastened the broom-handle-holder with a minimum length screw. See photo. This holds the pencil mic proudly and indestructibly.

The fourth and final tip will keep your TR-22 batteries up-to-par at all times without overcharging, overheating (remember Pete Stark's article) or shortened life. The key phrase is a "trickle-charge option," once again without destroying re-sale value or digging too deeply into the original well-designed unit. This modification merely involves installing a 15K

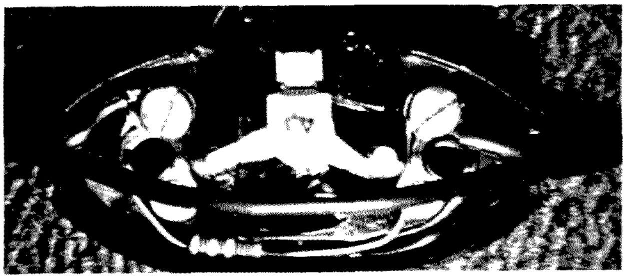

Trickle-charge switch on line cord.

Ohm, ½ watt resistor in series with the AC charging cord and an in-line switch to short out said resistor when full charging is desired. Full charging for the TR-22 measures 30 mA on my unit which is safe (less than 1/10 capacity) for 450 MAH batteries, for 14 to 16 hours, but the 15K series resistor in the line cord cuts this to 7 mA which is a good "keep-alive" current to compensate for the nasty self-discharge tendency of ni-cads on stand-by. The in-line switch I used (local hardware store again) is a SNAPIT 10A at 125V unit in which I was able to comfortably mount the resistor right across the switch screws and still pass the line cord (one conductor also attached to the two screws). See photograph. In action, of course, the switch either allows the resistor to be in series with the AC input (switch off) or it shorts out the resistor for full AC input (switch on). Dymo tapes take care of remembering that rather backward type logic (for me anyway). If you are adverse to even modifying the "stock" AC line cord for the TR-22, a standard TV "cheater" cord with the ears slightly trimmed will work in the radio as a charging cord which would be modified in the same manner. Now things don't get much cleaner than that!

In conclusion, it is my hope that these relatively easy modifications will bring you even more enjoyment from an already well-designed, well-constructed and very popular transceiver as they have for this writer. Each of the tips is a "one evening kit" as the Hams at Heath would say, and you will also have the satisfaction of home-brewing something while proving that Wayne was right when he said that Hams are not appliance operators but build what they cannot buy. ■

A New Fashion in Hats for the Fun Mode?

Jerry Copeland W8FJA
32540 Stricker Drive
Warren MI 48093

Safety helmets or hard hats are generally associated with the construction industry, but it is very obvious that our pretty model, Mary Hessell, does not need any work in that department. However, if you look at the top of the hat that Mary is wearing, you will notice that she has an antenna up there. If you are at all familiar with 2 Meter FM, you will recognize the common rubber flex antenna, helical whip, rubber duckie, banana, or one of the other names that it is fondly (and sometimes, not so fondly) called.

While this idea of an antenna on a hat is not original, we did do some experimenting and have come up with a pretty efficient performer and we can give you a few examples where you will have to agree that the whole idea is very practical.

Everybody likes a hand-held transceiver. Even if you have a good mobile and base station, there is nothing like a compact rig

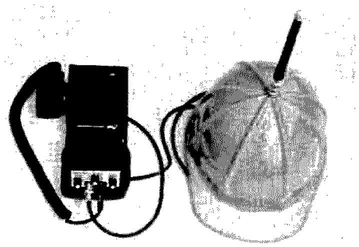

An upside down view of the Clegg HT-146 shows how it looks on the operator's belt.

that you can carry with you around the yard, garage or basement to keep up with what the rest of the gang is doing. If you are going to a swap-and-shop or hamfest, they come in very handy. For Civil Defense, RACES, AREC work, or serving your own community by providing communications for a parade, boat race, or an emergency, they are an invaluable tool.

The best way to carry your rig is on your belt in its own leather case, because it can get quite awkward after a while if you tote it in your hand. This of course makes an external mike the handiest accessory for it that you can have, as you can then operate it while it is still on your belt. Either the built-in speaker will suffice, or you can imitate Walter Cronkite or John Chancellor, and put a button in your ear for private listening. Or, perhaps your rig has a separate speaker-mike combination.

But there is still one big hang up. That rubber duckie antenna working in the vicinity of your navel has little or no efficiency, and your chances of being heard are very poor. The best remedy for the situation is to get it up in the air a little higher as any ham knows from experience. You could carry a six foot step ladder around with you, and if you get one of the new aluminum ones, they are fairly light. But there is an easier way: Mount your antenna on the top of a hard hat.

Safety helmets like this have become a fairly common thing in today's society, as the government agency OSHA is requiring them to be worn any place where head injuries are at all possible. Therefore, we can buy them very readily in most any community. We went to a local safety equipment dealer and found a selection of about five grades, prices and colors ranging from about $2.50 to $6.25 each. The one

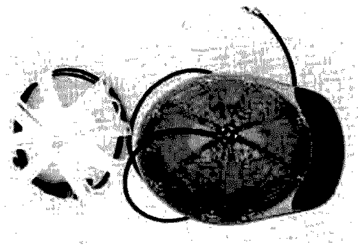

The zigzag pattern of the four radials gets lots of wire inside.

that we chose is the more expensive variety and is made of Lexan, which is pretty tough plastic. The better ones have easily adjustable headbands that can be removed and replaced very simply. One of these made the logical option for us because comfort is the number one consideration for our application, and we have some goodies to add to the inside.

The hand-held rig that we are using is a Clegg HT-146, and it has several features that make it well suited to work with the hard hat set-up. The external mike plugs into the top of the unit with a telephone-type plug and is large enough to use easily, but not bulky and cumbersome. When you are not transmitting, it clips to the hanger on the leather case and the coil-cord keeps everything neat and out of the way. The antenna output is to a BNC, and it takes but a second to take off the rubber duckie and connect the coax to the hat, or even to the 5/8ths on the car.

In addition to improving the antenna height for better transmission, we added radials to the inside of the hat to get a good ground plane. After drilling a hole in the top center, we mounted a BNC chassis connector. On the inside, a large thin washer with holes drilled in its edges was placed under the connector before tightening it. This is for the solder connections of the radials and coax braid.

We made several attempts at a pattern for placement of the radials, but finally used the zigzag pattern as shown in the photo. This method provides maximum spacing in keeping the radials away from each other, but still gets the most wire possible inside. We have about 23 inches on each of the four legs, or enough to accommodate a ¼ wave whip on the top of the hat, if you wish.

The radials are permanently attached with epoxy, after holding them in place temporarily with masking tape. We used epoxy on the edges only and used the five minute setting type. The longer timed stuff had a tendency to run down to the bottom of the hat before hardening, because upside down, it is just a big dish.

After soldering the braid and wires together at the base of the connector, we soldered the center conductor, and drilled a hole in the back edge of the helmet for a strain relief clamp to protect the coax line. Then we replaced the liner and the entire project was finished.

It does its job well, though admittedly it is kind of a funny looking thing. You can help this somewhat by adding a little art work if you are handy with a paint brush. Your call letters, handle, and even home QTH would be appropriate to put on the front or side. If you can't paint it, you can buy stick-on letters in any stationary store in dozens of sizes.

Here's another application — if your club or repeater group is called upon very often in your town for traffic control for parades and civic events, you could have all the members make up these hats all in the same color. They would allow you to use your HT's practically hands free, and give you all a uniform type image. Pretty good PR for ham radio.

In the beginning, we only promised you a way of operating your handheld rig from your belt without carrying a step ladder around with you. If enough hams start using something like this, they could catch on until someone comes up with a better idea. But at least you have to admit it's practical!!!! ■

Copper Clad

W.R. Lingenbrink W6HGX
1809 Hill Ave.
Hayward CA 94541

How often have you considered building a new unit to add to the shack and wondered —

Is the cost of the materials worth the effort?

Will it fit on a chassis I have on hand?

How about a cabinet?

What layout will be best?

Well don't think you are alone with these thoughts. Many builders in this day and age consider these factors before starting on a project. This I believe is one of the prime reasons responsible for the "Black Box" routine so readily followed now.

But I have found a use for copper clad board around the shack that puts the challenge back in home building and is a source of never ending delight when new ways are found to use this blessing to the home builders.

The use of copper clad board may not be new to many of the homebrew

generation, what with all of the solid state construction that is going on in the industries throughout the world, and of course the use by the home building group in constructing their projects, but most have been the etched variety of construction.

Have you tried using this same material as you would aluminum, brass or copper sheet when building converters or other types of bread-board construction? I have been truly amazed at the various uses that this type of material can be put to.

It is by far the simplest material to work, as a pair of tin snips can be used quite successfully to cut the material to the desired size without injury to the material. It readily accepts solder and can be cut to form boxes, shields and what not.

One of the principal joys of using this material is the one of short leads and direct ground connections (the ones that generally get us into trouble), along with easy access to the parts.

It is easy to fasten parts to the board. For instance, with a tube socket simply punch the hole in the right location, position the socket for the shortest lead length, then solder the socket tabs to the copper clad. There are no screw holes to position and drill, and no looking for the right size nut and bolt to hold the socket in place.

As for standoffs, tie points or feed thru points, well, the surplus market is still loaded with boards that have those fine teflon bushings by the score. Simply unsolder the connections to them and push them out of the board. As you find a need for them, simply drill the right size hole and insert the type you require in that location.

The use of this material around my shack has given me a new lift on home brewing. Securing the right size chassis for a new idea that I wanted to try was becoming quite a bit of work. It is much easier to use a bit of beat up material that already has lots of holes in it to start with.

A supply of this material can be had for those fortunate enough to live near an electronic manufacturing plant for scrap copper prices. Since not all the units are perfect in manufacturing and quite a bit of this material goes into the saleable scrap, most of these outfits are quite willing to part with this material.

I hope you have as much enjoyment using this method of building as I have, for we can sure use more constructors in our ranks. ■

Bicentennial Seconds

Steve Rich WA1DFL
31 Arlington Ave.
Revere MA 02151

Everyone must have seen those "Bicentennial Minutes" that follow their favorite programs in the evening. Well, after viewing these for quite some time it has become obvious that ham radio's part in history has not been shown and has been well hidden.

After some extensive and exhaustive research, we have uncovered some of ham radio's unheralded facts about the birth of our nation.

In honor of our 200th birthday, 73 is proud to be the first to publish these little known and soon forgotten "Bicentennial Seconds":

Contrary to popular belief, the revolutionary war did not start over "Taxation without representation," but rather the reason being that the colonists believed that America should receive separate country status because it lies more than 200 miles off the coast of England.

History tells us it was Paul Revere that devised the lantern scheme to warn which way the British were coming. The truth is that it was a lad named Morris who, at a Sons of Liberty Repeater Association meeting, thought up the "one if by land, two if by sea" that quickly became known

among the patriots as the Morris Code.

Paul Revere allegedly rode his horse around the countryside to warn of the approaching British. Actually, he never left the comfort of his shack, and used his Handy-talkie on the Minuteman repeater to warn each town and hamlet.

Thomas Jefferson did not only write the Declaration of Independence and the Bill of Rights. He also was largely responsible for the Communications Act of 1774 which established incentive licensing in early America. It called for only two classes of amateur license. The Patriot class included all amateur privileges. The Tory class permitted only five watts input on 27 MHz.

After this didn't work out too well, Thomas Paine was asked by the F.C.C. (First Continental Congress) to write a Docket of Proposed Rulemaking which he entitled, "Common Sense."

Benedict Arnold, in addition to treason against America, also was the first to be convicted of cheating on Field Day. He used ac power rather than portable power.

The Liberty Bell, symbol of Freedom, almost didn't have a home until the Philadelphia Tinkerbelle Repeater Association relinquished their site atop Independence Hall for the Bell.

The Boston Tea Party was supposed to have started over the high taxation of tea. The truth is that the Party started as a friendly hamfest, but when the R.S.G.B. announced a dues increase and a 10 pound charge for their awards program, the Colonists decided to form their own league and a melee ensued.

Patrick Henry's original quote in front of the VA Legislature was, "Give me separate country status or give me death!"

Benjamin Franklin made many contributions to the war effort and in addition made many inventions. One stormy day after Franklin had been flying his kite he informed his fellow OM's that he had invented the electronic key.

General Lafayette almost didn't come to aid the Americans because he was refused reciprocal operating privileges. However, Lafayette changed his mind and decided to come after he was promised he could open a radio store in New York at the conclusion of the war. ■

73 READER SERVICE

Circle appropriate Reader Service # for desired company brochures, data sheets or catalogs and mail in to 73. Include your zip code, please. Send money directly to advertisers. *LIMIT: 25 requests.*

ADVERTISER INDEX

☐ *NEWSSTAND* ☐ *SUBSCRIPTION*

READER SERVICE
73 Inc., Peterborough NH 03458
APRIL 1976

Please print or type.

Name ____________________ Call ________
Address ____________________
City ____________________
State ____________________ Zip ________

Coupon expires in 60 days . . .

propagation

by
J. H. Nelson

EASTERN UNITED STATES TO:

GMT:	00	02	04	06	08	10	12	14	16	18	20	22
ALASKA	7A	14	7	7	7	7	7	7	7	7	7	7
ARGENTINA	14	14	7B	7	7	7	14	14	14	14A	14A	14
AUSTRALIA	14	14	7B	7B	7B	7	7	7	7	7	14	14
CANAL ZONE	14	7	7	7	7	7	14	14	14	14	14A	14
ENGLAND	7	7	7	7	7	7	7A	14	14	14	14	7A
HAWAII	14	14	7B	7	7	7	7	7	14	14	14	14
INDIA	7	7	7B	7B	7B	7B	7B	14	14	14	7	7
JAPAN	14	7B	7B	7B	7	7	7	7	7	7	7	14
MEXICO	14	7A	7	7	7	7	7	14	14	14	14	14
PHILIPPINES	14	7B	7B	7B	7B	7B	7	7	7	7	7B	14
PUERTO RICO	14	7	7	7	7	7	7	14	14	14	14	14
SOUTH AFRICA	7A	7	7	7	7B	14B	14	14	14A	14A	14	14
U.S.S.R.	7	7	7	7	7	7	7	14	14	14	7	7
WEST COAST	14	14	7	7	7	7	7	7	14	14	14	14

CENTRAL UNITED STATES TO:

GMT:	00	02	04	06	08	10	12	14	16	18	20	22
ALASKA	14	14	7	7	7	7	7	7	7	7	7	7A
ARGENTINA	14	14	7B	7	7	7	7	14	14	14	14A	14A
AUSTRALIA	14	14	7B	7B	7B	7	7	7	7	7	14	14
CANAL ZONE	14	14	7	7	7	7	7	14	14	14	14A	14A
ENGLAND	7	7	7	7	7	7	7	7	14	14	14	7A
HAWAII	14	14	7A	7	7	7	7	7	14	14	14	14
INDIA	14	14	7B	7B	7B	7B	7B	7	7	7	7A	7A
JAPAN	14	14	7B	7B	7	7	7	7	7	7	7A	14
MEXICO	14	7	7	7	7	7	7	7	14	14	14	14
PHILIPPINES	14	14	7B	7B	7B	7B	7B	7	7	7	7B	14
PUERTO RICO	14	7A	7	7	7	7	7	14	14	14	14	14
SOUTH AFRICA	14B	7	7	7	7B	7B	14B	14	14	14	14	14
U.S.S.R.	7	7	7	7	7	7	7	7	14	7A	7	7

WESTERN UNITED STATES TO:

GMT:	00	02	04	06	08	10	12	14	16	18	20	22
ALASKA	7	14	7A	7	7	7	7	7	7	7	7	7
ARGENTINA	14	14	7B	7	7	7	7B	14	14	14	14A	14A
AUSTRALIA	21	21	14	14	7B	7	7	7	7	7B	14	14A
CANAL ZONE	14	14	7	7	7	7	7	14	14	14	14A	14A
ENGLAND	7	7	7	7	7	7	7	7	7	7A	14	7A
HAWAII	21	21	14	14	7	7	7	7	14	14	14	14A
INDIA	14	14	7B	7B	7B	7B	7B	7B	7	7	7	7
JAPAN	14	14	14	7B	7	7	7	7	7	7	7A	14
MEXICO	14	14	7	7	7	7	7	7A	14	14	14	14
PHILIPPINES	14	14	14	7B	7B	7B	7	7	7	7	7B	14
PUERTO RICO	14	14	7	7	7	7	7	14	14	14	14	14
SOUTH AFRICA	14B	7	7	7	7B	7B	7B	7B	14B	14	14	14
U.S.S.R.	7	7	7	7	7	7	7	7	7A	7A	7	7
EAST COAST	14	14	7	7	7	7	7	7	14	14	14	14

Open = Good ☐ = Fair ○ = Poor

1976			APRIL			1976
SUN	MON	TUE	WED	THU	FRI	SAT
				1	2	3
4	5	6	7	8	9	10
11	12	13	14	15	16	17
18	19	20	21	22	23	24
25	26	27	28	29	30	

73

AMATEUR RADIO

MAY 1976
$1.50

SPECIAL ANTENNA ISSUE

PLUS

I/O COMPUTER SECTION

73

#187 MAY 1976

COVER: Oils on masonite, by Jerry W. Geiger, Delafield WI.

NOTICE TO READERS

IT IS A CRIMINAL VIOLATION OF FEDERAL LAW AND OF THE LAW OF MANY STATES TO USE ANY INSTRUMENT, DEVICE, OR SCHEME TO OBTAIN ANY TELEPHONE SERVICE WITHOUT PAYMENT OF THE LAWFUL CHARGES THEREFOR. IT MAY ALSO BE A CRIME TO PROVIDE INFORMATION THAT IS USEFUL FOR SUCH PURPOSE UNDER CERTAIN CIRCUMSTANCES TO ANY PERSON, INCLUDING THE INFORMATION APPEARING IN THE ARTICLE BEGINNING AT PAGE 67 OF THE JUNE 1975 ISSUE OF THIS MAGAZINE.

WE HAVE BEEN NOTIFIED BY THE BELL SYSTEM THAT SUCH VIOLATIONS ARE VIGOROUSLY INVESTIGATED AND PROSECUTED. ACCORDINGLY, YOU ARE URGED TO DESTROY ANY DEVICES YOU MAY HAVE WHICH VIOLATE ANY OF THESE LAWS, INCLUDING ANY DEVICES BASED IN ANY WAY ON THE MATERIAL APPEARING BEGINNING AT PAGE 67 OF THE JUNE 1975 ISSUE OF THIS MAGAZINE.

THIS STATEMENT IS BEING PUBLISHED BY ORDER OF THE SUPERIOR COURT OF THE STATE OF CALIFORNIA WITH THE CONSENT OF THE PUBLISHER OF THIS MAGAZINE.

73 Magazine (where the action is) is published monthly by 73, Inc., Peterborough NH 03458 (a good place to live). Subscription rates are a ridiculously low $10 for one year worldwide, $17 for two years, and $17.76 for three years (the buy of the year?). Second class postage paid at Peterborough NH 03458 and at additional mailing offices. Phone: 603-924-3873 (hey, don't call much after 4:30 pm EST, okay?). Microfilm edition – University Microfilms, Ann Arbor MI 48106. Tapes – Science for the Blind, 332 Rock Hill Rd, Bala Cynwyd PA 19904.

INCLUDE OLD ADDRESS AND ZIP CODE WITH ADDRESS CHANGE NOTIFICATION.

NEVER SAY DIE

...de W2NSD/1

EDITORIAL BY WAYNE GREEN

MISSING ADVERTISERS

Many readers have been writing in to ask about specific manufacturers whose ads have not been running in *73*. Since *73* has more ads than any other ham magazine . . . and since the *73* policy is to refuse ads to unreliable firms . . . firms which are advertising in other ham magazines even though the publishers know they are unreliable . . . readers ask, to make sure, whether such and such a firm has been refused ads in *73*.

Several readers have asked about Eimac recently. Eimac advertises in the other three ham magazines, but not in *73*. As far as we know the reason for this is that Eimac is trying to put pressure on *73* to run non-controversial editorials. No one in the industry is going to force *73* to run or not to run anything, including editorials, and we at *73* think that this attempt to use economic power to influence the press is a serious matter. Read the editorials in the other ham magazines and decide for yourself how successful Eimac has been . . . not a controversy in a carload.

We at *73* think that thought-provoking controversy is healthy for amateur radio . . . and we know with a certainty that it is healthy for *73*. *73* is published for the readers and will continue to be responsive to the readers, not manufacturers who try to buy what they think should be in the magazines. Ads should be run for the purpose of selling products, not for forcing the manufacturer's views on the editor.

Eimac is big enough and independent enough of the ham market so they can do very well with or without ham magazine advertising. This puts them in a good position to throw weight around . . . weight which few magazine publishers can afford to ignore.

About the only difference to the average *73* reader is that each issue of the magazine is just a few pages thinner . . . perhaps there is one less article as a result of the Eimac boycott.

Another missing advertiser, of late, has been EBC. We at *73* felt that the EBC rig did not meet the published specs and held up further ads until the situation was cleared up. Recent reports are that EBC had cleared up the problems with the rig so as soon as this can be verified by a test of a new rig with all the latest mods, EBC may be back in *73* again.

Missing ads like that are expensive both for *73* and for the advertiser, so ads are not held up frivolously.

MORE HAMFESTS?

If local hamfests were better promoted to bring in CBers and other prospective hams instead of just being geared for the entertainment of those already licensed, we might be able to bootstrap more chaps into our interesting hobby.

Hamfests can be run for a profit, you know. Those interested in finding out details on how to make big money out of hamfests should get in touch with Leonard Norman . . . an ex-ham (the FCC took away his ticket) . . . who has been running 'em for years in Las Vegas. Write to him at his convention headquarters in Boulder City, Nevada or, if there is any problem, get his Boulder City office address from *Ham Radio Magazine* in Greenville NH . . . they are very close to Norman.

Commercialism can go too far, of course, so you have to be careful about this. If you charge for manufacturer booth space, for admission, for technical talks, dinners, cocktail parties, and everything, you may find interest dropping. You may be able to get away with having a manufacturer pay for a cocktail party . . . and then

Continued on page 100

HINT OF THINGS TO COME?

Is this a new CB magazine? Thanks to Marc Leavey WA3AJR for spotting this "new" QST cover.

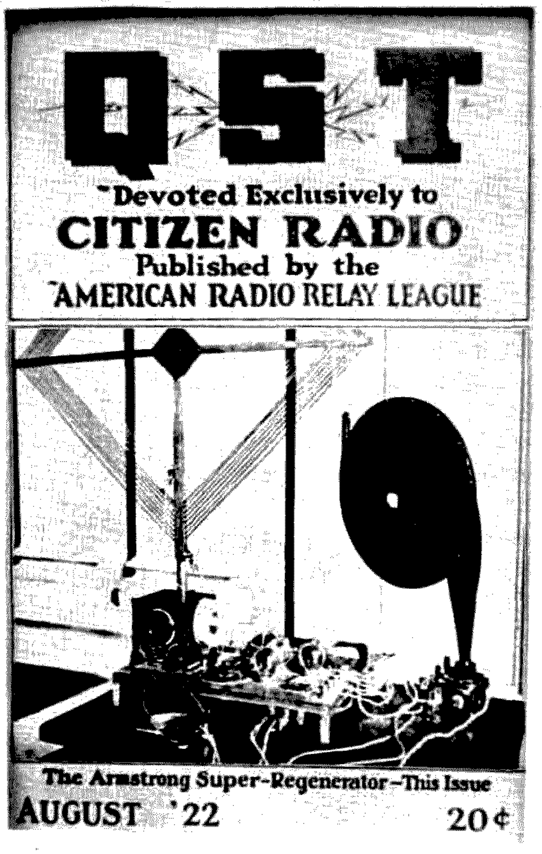
QST
"Devoted Exclusively to
CITIZEN RADIO
Published by the
AMERICAN RADIO RELAY LEAGUE
The Armstrong Super-Regenerator—This Issue
AUGUST '22
20¢

LETTERS

ROCKY MOUNTAIN HIGHS

Aspen was a blast – all that we expected and then some! We all regretted leaving there, that's for sure. I skied solidly for six days, starting Sunday, January 11, on the four 11,000-foot mountains – Aspen, Aspen Highlands, Buttermilk and Snowmass – and found them all superb. Aspen village is located at the foot of Aspen Mountain and Aspen Highlands, and Snowmass was about 12 miles away.

Chuck WA1KPS, Wayne W2NSD, and Pete WB9FLW from Illinois took lessons on Buttermilk most of the week and I skied with Eric WA1HON from Lincoln, Mass. We did our damndest to ski everywhere, but were lucky just to hit every lift on the mountain for one ride during the day. That's how many lifts there were and how big the mountains were! Most of the trails were very wide, sweeping down the mountainsides. Sugarloaf in Maine has, in my opinion, the only trails in the Northeast at all comparable and it's less than half the size of, say, Snowmass. The weather was clear almost every day we were there, with the exception of Monday when we had snow flurries. The scenery was simply majestic with snowcovered mountains and valleys visible in every direction. The temperature during the day ran from 15 or 20 degrees to about 30 to 40 degrees by the end of the week. Because of the altitudes (Aspen village is 8000 feet – almost 2000 feet higher than New England's Mount Washington), we'd get winded easily; I came up puffing just from bending down to buckle my boots.

We all carried 2 meter FM walkies and had fun chatting together on "52 direct" between mountains while riding up on the chair lifts. No repeaters yet in Aspen – wait until *next* time! Chuck brought along an Atlas SSB transceiver and Dentron tuner and we had a batch of 75m QSOs using an end-fed "long wire" hung on the hotel balcony one dark night.

Our hotel was very nice as expected – very convenient, located between the two chair lifts at the foot of Aspen Mountain, about a block from the nearest lift and a block from the bus stop from where the free bus shuttles ran to all the other mountains. After skiing each day, we jumped into the hotel's heated pool for awhile. Boy, that hot water was great for the aching muscles after 6-7 hours of skiing! Fun to float on your back and look up at the stars or snowflakes, whatever. Then, into the sauna to sweat for a bit in its 230 degree temperature. We all got together for supper every night, which was a "peak" experience of the day, since, although the town has a population of 7000 to 8000, it has 80 restaurants and nightclubs and we went to a different gourmet restaurant each night. Supper would last a couple of hours, then maybe we'd look in on a nightspot briefly, and off to bed.

The restaurant prices were a bit high – as was everything else in town – usually supper cost around 15 bucks apiece. But the food and service were superb.

We did encounter several unpleasant situations, unfortunately. We had a beautiful flight out to Denver from Boston on Saturday, January 10th. Chuck, Eric and I met Wayne W2NSD, fresh in from the SAROC hamfest, at the Denver airport. That's where our troubles began. Seems that the little airline which was to fly us the 200 miles out to Aspen had sold at least two tickets for every available seat. Things were totally screwed up when we arrived with a lot of people standing around getting unhappier by the moment and the airline people acting unpleasant about the whole thing. Wayne finally managed to get on a plane and leave for Aspen, but not the rest of us. After we'd been there about 4 hours, we said the hell with it, cancelled our tickets, had a heckuva time reclaiming our bags and skis, rented a car and set out about 7 pm to drive to Aspen, in spite of warnings about icy roads and snow-blocked mountain passes. Fortunately, the weather was fine, and with good moonlight, the visibility was excellent. Immediately west of Denver, which is 5000 feet, you climb into the mountains and we drove over a couple of 11,000-foot passes, a fantastic drive. Passed the Loveland ski area, the top of which seems to be above timberline, then through Vail which is a mass of condominiums tucked in a narrow, deep valley, and some other big ski areas I don't remember the names of. Finally, about midnight, we left the main highway west, and drove the last 40 miles or so south to Aspen, arriving about 1 am. We finally found the hotel after plowing through masses of party-goers (that's Aspen *every* night!) and off to bed. Up early and off to Buttermilk for a super first day of skiing in foot-deep powder and balmy weather. When we returned to the hotel, Chuck and Wayne's room had been robbed: tape recorder, still and movie cameras, airline tickets, and a 2m walkie – in all about $2000 worth. Three days later, Pete WB9FLW from Illinois, who had joined our group, had his room robbed. There were several other thefts from our hotel during the week. Chuck caught a bad cold and was unable to ski for the last two days. On a few occasions, we were overcharged for meals, but our sharp eyes caught the errors.

It was a great vacation and my skiing here in New England can now be described as only second-best. You can't believe how much fun it is to run those big beautiful trails out there – even the moguls are bigger – can you visualize Cannon Mountain's Zoomer or Polly's Folly trails half to three-quarters of a mile long or even steeper? Or skiing a trail even longer without seeing one mogul? Or being scared stiff while riding a chair lift up an 11000-foot high narrow ridge – just wide enough for chair lift and ski trail underneath and looking down sheer cliffs on either side? I was in terror on that one, located at the top of Aspen Highlands. Rode it a second time to see if I was still scared – I was... Or the beauty of the snow plume blowing off the 14,000 footer up the valley between Buttermilk and the Highlands. Or the memory of stopping high up on Aspen (Ajax) Mountain late in the afternoon and looking down at the village a couple of thousand feet below. Or the sheer fun of running the open snow fields near the summit of Snowmass, called the "Big Burn," due to a fire which cleared most of the trees from the area years ago. Still an occasional tree there to dodge in the half-mile wide ski "trail." One can get spoiled fast with this kind of a mountain.

So, inevitably, it all came to an end. On the 17th, we caught the shuttle bus to the airport near the foot of Buttermilk, *packed* into the little twin-engined Otter aircraft – big enough for 19 passengers, and climbed out over the Aspen valley en route to Denver, about an hour away. No cabin pressurization – my fingers turned blue, Wayne appeared to be slumped over up forward. Scenery below was superb. Then, big DC-10 airbus to Boston – 2 seats wide on either side plus 4 seats in the middle. Landed a little after 6 local time and found it bitter cold and windy in Boston. Home about 8, vacation over. I'd like to give some credit where it is due – first to Wayne and Chuck for the whole idea last summer, to Rocky Mountain Airways who provided us the inspiration to drive from Denver to Aspen (I wonder whatever happened to the 47 anxious folks ahead of us in the Rocky Mountain queue at Denver), to the Continental Inn at Aspen where the accommodations were excellent, but had unsolicited room serivce (the burglars), and to amateur radio itself which got me going on the best vacation imaginable for this ham skier.

Sandy Cole W1PVF/1
Concord MA

HI YOURSELF

Just received your new *73* format. I don't like it. Looks like mid-winter Sears sale catalog. Hi.

Jack Kulish K7YNY
Stanford MT

WHAT SERVICE!

I would like to tell you how pleased I am with one of your advertisers. I mailed two separate orders at different times to James Electronics. Both orders were mailed on Sunday and received back in my mail box the following Saturday. What service! Also I received 100% of what was ordered. No back orders, no substitutions, and no oversights. You can't believe how easy this makes building a project. Others are still waiting to receive their B/Os or missent parts.

Harry R. Clement
Des Moines IA

I recently placed orders with three of the advertisers in the pages of *73:* S. D. Sales, James Electronics, and A P Products, Inc.

All three of the orders were received complete, exactly as ordered, within 10 days of my mailing of the orders!!! This is fantastic!!! S. D. Sales even included a free package of LEDs, which is unheard of when dealing with the large suppliers.

I'm sure I am not alone in saying THANK YOU to you and the advertising staff of *73* for making it possible for these relatively small companies to become known to your readers. I think that it is unfortunate for amateur radio that the January 1976 issue of *QST* contained only one advertisement from a small parts supplier which, incidentally, was not one of the three listed above.

Please continue with your work at *73* in the same vein as you have been. We may not always agree with your viewpoint, but at least you do make your readers aware that there occasionally *can be* justifiable, sensible and rational alternatives to the ARRL position on various matters. Thanks for the originality of *73*!

Louis A. Hodges W9LMI
Chester IL

Thanks, Louis — I do like to hear about good experiences with advertisers. I also want to hear immediately about any bad experiences with our or other magazine advertisers. I have been known to raise hell over things like that. 73 loses a lot of money every month by refusing to accept ads from firms running ads in QST, HR and CQ . . . I need to know who the good guys are and who the bad guys are . . . and I want to know when they change their spots. Re my editorials . . . I get a big laugh out of a few manufacturers who won't advertise in 73 because they think this will force me to run QST-type editorials . . . that's dumb. I write my stuff to get the juices running and whether I believe what I write or not is irrelevant. I want readers to think and have some fun. Oh, a few get up tight . . . but you know, oddly enough, I get virtually no letters to the editor which I could use instead of my editorials to get readers thinking . . . pity, for I'd rather be out skiing than writing. Without controversial ideas, 73 would be just like the other ham magazines . . . and you wouldn't want that — Wayne.

KEEPING PACE

K8YYP's request for heart pacer information reminded me that others having or contemplating a pacer installation might benefit from a cassette tape made by VE7QQ, another pacer recipient.

Sadly, Ken VE7QQ died from other causes. However, I will make a copy of his interesting recording, at cost, for those interested.

Yes, I contacted K8YYP.

Gene Brizendine W4ATE
Huntsville AL

EXCEPTIONAL OAKLAND

In light of recent editorial comments about repeater operations, we feel that certain points should be brought to light. In our area, we have a repeater (of which we are both control ops) which *does* provide a source of intelligent discussion and which *does* provide first rate emergency service. We are speaking of WR2ABN (10/70) in Oakland, N.J.

We have both had the privilege to monitor and to participate in serious discussions of music (both classical and jazz), astronomy, astrology, religion and philosophy on this repeater in the evening hours, and have found these discussions most stimulating.

Likewise, the Oakland 10/70 machine regularly handles more emergency traffic in a week than any of the repeaters listed in that other magazine do in a month, a fact which we intend to publicize further. In addition, in every instance of bad driving conditions in the metro North Jersey/New York City area which has occurred in the past year, WR2ABN has been used almost continually throughout the period as a clearinghouse for road and weather information, with formal net control and monitoring of the National Weather Service reports and local police channels to provide greater assistance. Travelers in and through our area know that, if they should need assistance or encounter an emergency during the normal operating hours of the repeater, they need only put out a call for help and someone will come right back to them.

In contrast, local Citizens Band is almost impossible as far as transmitting a readable message through the din is concerned. The total discourtesy and lack of concern for any sort of operating standards is the rule here on CB. In much monitoring, we and others have yet to hear an emergency report on CB in this area, even on Channel 9, because that too is usually clogged with multiple QSOs all interfering with one another.

In short, we do not really wish to disagree with your premises entirely, although we have both encountered other machines elsewhere which are also most helpful, but rather to point out that, in our area, WR2ABN is an exception to the sentiments expressed in recent issues.

Page E. Taylor K2QAR
Butler NJ
Russell J. Edmunds WB2BJH
Kinnelon NJ

QUICK AND CHEAP

Suggestions from a pre-Novice — Include projects on a regular basis that can be constructed cheaply and would help a Novice to get on the air. Examples: T-R switches, CW transmitters and receivers, quick and cheap antennas, etc.

If we are to attract new people to amateur radio we need attractive projects that can be built quickly, from readily available parts, and give the builder an immediate sense of participation in radio. Construction projects for Novices are all too often built and designed by amateurs with years of "junk box" materials and experience at hand. Novices, on the other hand, have no used parts, no familiar sources of supply, and little or no schematic and construction experience.

The 5 band transmitter on pg. 125 of the Nov/Dec issue is a typical example. This transmitter is just what I'm looking for. However, the article does not include a complete parts list, has no wiring diagram that shows component placement, and makes no attempt to teach a Novice. The project could have included construction details, theory, suggestions for coupling with a receiver/antenna (T-R switch), and a single source that sold all parts.

The scope project on pg. 74 is much more complete, as it includes many of the details mentioned for a Novice project. Yet this project is written for far more advanced hams. Quick and cheap projects seem to get short and sweet space in magazines these days, yet if a beginner can't get started, he will move on to another field of interest — one that will gratify his needs and interest.

William Cook
Alpena MI

ROCKING HAM

I want to tell you how much that 13+ wpm code tape has really helped me. Believe me, I've only spent a total of less than 7 hours, and my speed is up to about 15 wpm!

I am 20 years old (soon to be 21). I took my Novice test in Nov. 1974 and got the license in Jan. 1975. Then 3 months later I was out of work for 3½ weeks because my place of work had to close for remodeling. So I "boned up" on the theory (even though I knew some radio theory) and the code. Then in April, 1975 (note the 3 months later!), I took the General and Advanced on the same day and passed! I also used your tape at school in spite of the other kids giving me that weird look.

I also plan to go for my Extra class soon. I also agree that if you want that ham ticket, *earn it!* Don't sit around lazily and hope someone else will give it to you!

I now work 2 meters as well as HF, and would you know? These guys on 2 meters are beautiful and I love them! I've received a lot of help from them too, which I dearly appreciate!

I'm also planning to get up a rock group and call it "Larry WA4MJQ, And His Ancient of Days." Who knows? This may indirectly expose amateur radio to the public.

After reading some articles in *73*, I also want to note that I've also had trouble with Trigger Electronics. However, I did get my money back through the intervention of the Postal Inspection Service.

I really like your magazine!

Larry S. Lawhorn WA4MJQ
Richmond VA

COMPUTERE(A)SE?

Keep the microcomputer articles coming . . .

Robert Brubaker K3UPK
Lebanon PA

Thank you for stimulating our interest in computers.

What we need now is articles which tell us for what purpose we may use a computer.

What will a computer do for us in the home, the workshop, and the ham shack?

Tell us. It will help us to know the applications, and that would in turn be good for the industry.

Harry D. Minshew W6ZOW
Hemet CA

Right! Well, I can think of a lot of things I want to do with a computer, such as get a list of the times and antenna bearings for accessing Oscar 7 . . . playing Star Trek, Twenty-One, Lunar Landing and many other games . . . keeping an index and list of all the recipes I like . . . an index to all of the ham articles of possible interest to me such as RTTY, SSTV, uP, FM . . . an index to my record and tape collections . . . a list of all the repeaters in the world . . . a list of all the DX stations I've contacted and the details about them, QSLs . . . my checking account . . . generation of SSTV pictures and art . . . generation of art on my color TV set . . . RTTY generation and contacts over the air using Baudot, ASCII or Morse Code . . . accessing other computers via Oscar 7 . . . mailing list for some clubs I belong to . . . editing letters and articles which said computer then can print out . . . key word sorting RTTY short wave news broadcasts for anything concerning amateur radio . . . checking for any calls via any repeaters within range automatically . . .

things like that. With two or three terminals most computers can do several tasks at once . . . okay?
– Wayne.

I will not forgive you for bringing a new interest into my life, just when I had decided that I had more than enough projects to keep me busy. A friend of mine, Dave K5WNV/7, has an Altair 8800 with 16K memory, CRT terminal and TTY I/O. Friday he brought home from Albuquerque one of their floppy disk units. Since I don't want to get in that deep and his unit is idle a good deal of the time, we have started a ham radio-computer project. We live 25 miles apart and he is going to send me the video output from his I/O port on 439.25 MHz and I am going to access the machine with an ASCII keyboard modulating a 147 MHz FM transmitter. At least that's the plan. We've applied to the FCC to use ASCII on two meters. Enough for now – I'll get Dave to write it up when we are up and running.

Rod Hallen WA7NEV
Tombstone AZ

Sure like the new format, but am wondering about all the highly technical computer and digital articles you feature. I'm an Extra and schooled as an E.E., but this stuff is so far beyond me – only thing I understand is the title. I'm certainly for progress, but it seems many of these articles are way beyond the normal reader you may have. I take all four ham pubs – and like yours the best – but honestly it's leaving a good part of us in a cloud of dust. Respectfully submitted,

Lon C. Brickley W4AFS
Pompano Beach FL

If you live in the metropolitan New Orleans area and are interested in computers, you are invited to join our group. Whether your interest is hardware, software, applications, or just general interest, we welcome your input. For further details please write or call me.

Emile Alline, Jr. WA5WUJ
1119 Pennsylvania Ave.
Slidell LA 70458
504-641-2360

P.S. Keep up the good work – especially in translating "computerese."

ENTERPRISE

Just finished building the Starfleet Communicator (February, 1976). Nice toy; the girls love it! However, I did have some trouble getting the little unit going, and so offer the following suggestions to those who have built, or will build, this device.

First off, use only a fresh, heavy-duty 9 volt battery when checking out the unit. Secondly, the voltage on pin 5 of IC1 (7493) should be fairly close to 5 volts. When I first tried the unit, the voltage on this pin was less than 4.5 volts, and the communicator would not function. The problem could have been due simply to the characteristics of the various devices I used. The LEDs were from James Electronics (Model XC526), while the UJT was one contained in a package of 4 which was purchased at Radio Shack (Part Number 276-111). Regardless, I lowered the 100 Ohm resistor in the 5 volt supply line to about 50 Ohms so as to obtain the proper operating voltage.

At this point, it was necessary to lower the 82 Ohm resistor in the gating line (pin 11 of IC1) to 39 Ohms, and to bypass pin 14 of IC1 with 0.3 uF (for noise suppression) before the unit would function.

Some other hints . . . I built my unit in the case of an old transistor radio. This provided the case, a speaker, and a battery compartment all in one step. Further, not wanting to bother with the flip-up top, I simply mounted an SPST switch on the side of the case which is used to activate the communicator. Finally, I used ElectroCraft Model 35-414 push-button switches (miniature, momentary switches) for S2 and S3.

As I said, the unit is working and the girls love it (ages 6 and 7). Further, I learned quite a bit in the process of building it. Hopefully, with the above info, others will have an easier time getting their communicators going.

Ted Cohen W4UMF
Alexandria VA

P.S. James Electronics is fantastic!!! Ordered some parts by mail on Saturday, and had them by noon, the following Wednesday!

YL 73 73!

Recently Jim Ricks W9TO, inventor of the world-famous keyer, sent his young lady to pick up his auto tags. Completely by chance, his new plates read: YL 73 73 !

Gene Brizendine W4ATE
Huntsville AL

BAD APPEARANCE

I recently learned a valuable lesson about automobile security. While parked in a hotel lot in Milwaukee, my car was broken into, and my broadcast radio, along with a good part of the dash, was stolen. This was not a tape machine, and an examination of nearby cars turned up several with better, more easily removable units. However, my car did have the bottom half of an HF antenna on the bumper. The police seemed to think that the thief was looking for CB units, and being unable to see through the frosted windows, broke in, and then took what was there. I guess the moral is avoid even the appearance of a rig in the car.

Alan P. Biddle WB9SQB
Madison WI

TYPING

I really enjoy your magazine. I'm planning to get my Novice license pretty soon.D o you think you could have a few how- to-do-it articles for the guy who is not too experienced. T hanks. So much for my typing.

Tom Rosicka
Springfield OH

THE QUEST FOR THE HOLY PR

Please eyeball the enclosed PR spot I landed in my local newspaper. I'm proud of it and you should be too, because WA4BDW's story in the Jan. *73* inspired its beginnings. You know this guy had a lot of nerve with his item #2, "Land a feature story in a local newspaper," bit. But since the CBers get it done now and then I thought what the hell. So I wrote Bob Iverson (author of article enclosed) a letter and invited him over to the house to see what I had going. I baited the invite with things like Oscar, ATV and the like, and used the basic premise (per FCC R&R) that hams are around to provide emergency communications and enhance international goodwill. Note how that got in the first paragraph.

This story appeared on Sunday, Jan 18th in the Danville *Commercial News*, which is owned by a big outfit called the Gannett News Service. The local paper circulates better than 75,000 with Danville, Illinois the hometown of about 41,000 people.

You might be interested in knowing that I took about an hour to prepare for the reporter's interview by painstakingly bookmarking articles (especially ones with photos) from *73* and *QST* to back up everything in the story. My presentation took about 25 minutes, including questions from Iverson and the photo. It was topped off with a short QSO with WN4BSL in Owensboro, Ky. for effect. I might add that my presentation was very general and not at all technical, touching on a variety of things which I thought non-hamming, non-technical readers might like. Again, the basic premise was to make aware the existence of us in the event of a large scale disaster. Detente is in too, so hence the goodwill.

A local ham whom I've never met called to tell me that the story created a lot of interest on the 2 meter net and congratulations were offered on behalf of himself and all the locals. A very nice gesture, I thought, since this guy is a General and is into slow scan in a big way, which would have been nice for the mug shot.

At my place of full-time work, I was treated as somewhat of a man-of-the-hour and greeted by a programmer on the staff with "Who the hell do you know at the paper?" No one. At my place of part-time work, country FM station WIAI, the manager was very pleased and intended to send the owner of the station and the building a copy of it. He lives out of town, in fact out of the county. This, despite the fact that WIAI is not mentioned in the article. I jock there on weekends, just in case you ever buzz around here, Wayne. 50,000 Watts 99.1 and good country music. What more could you want???

Anyway, that's my effort toward PR, and you and WA4BDW should be congratulated for the inspiration. But most of all, Bob Iverson of the *Commercial News* should be honored for his excellent writing and comprehension. After all, the reporters have to write these things and they really decide how well it's going to go over.

You know, I've read many articles telling us we need PR, but nothing about *how* to PR. Maybe you could help by telling us how to prepare feature article presentations, or HOW to set up booths at local CB jamborees or HOW to give demonstrations for school science classes. Some of us don't know how to organize our time or talk or any damn thing. I made my presentation without any idea how it would turn out. Lucked out I guess.

Well, so much for all this. Hope you enjoyed the clipping and thanks for listening. Also like the new mag format. It's about time.

Ted Osborn WN9PIQ
Danville IL

P.S. Also, tell Mary she did a fine job with my Reader Service requests for this month.

INFLATION

In reference to the January 76 issue of *73 Magazine*. The article "County Hunting" by W2SDU quotes the price of Directory of Post Offices available from Government Printing Office under stock No. 3900-00242 at $4.25.

Have just received the copy I ordered and find the correct price is now $5.05 – the price quoted now being obsolete.

Earl Stacy K7BD
Selah WA

IN ENGLISH, PLEASE

In reference to your article "Stereo – A New Type of CW Filter," in the March issue, it doesn't take much imagination for RTTYers like myself to stick the Mark and Space scope monitoring audio outputs of the teletype converter into an inexpensive "hi-fi" stereo amplifier and tune for equal left and right separation of the FSK signal. Using stereo headphones gives you a pretty broad left-to-right audio "picture" of the signal so that centering the FSK around the crossover point is fast and very accurate. Note that QSBing of the Mark and Space frequencies does not effect the tuning sense you have as you bring the signal into proper position. This simple method of tuning FSK gives you a great sense of security, because

Continued on page 74

Looking West

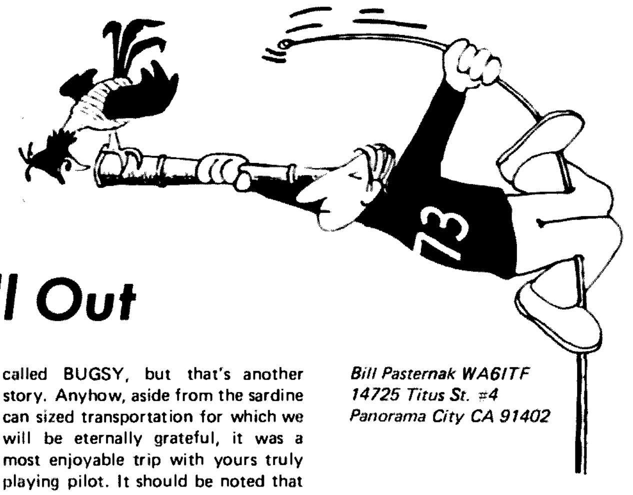

A Dark Horse Will Out

Bill Pasternak WA6ITF
14725 Titus St. #4
Panorama City CA 91402

Ever have a run of luck when nothing goes right? You know, when it seems like the gods have things stacked up against you. That's just the way 1976 began. Actually, it began in early December when some low creature decided that he needed my Icom IC-2F (serial #4893 if you happen to run across it) more than I did and went to the trouble of purloining said radio from under the dash of our '63 Cadillac. I said trouble, since it not being my nature to trust mounting brackets and such, I had drilled three holes through the top case cover and mounted the radio directly to the dash in as inconspicuous a spot as I could find. I guess the spot was just not inconspicuous enough and scratch one IC-2F.

On New Year's Eve I remember telling Sharon that '76 would be better than '75; it had to be. Was old ITF ever wrong! On New Year's Day afternoon, the oil pump in our '71 Torino let go and took the engine with it. Oh, the idiot light did come on . . . after the car had chugged and grinded its way to a stop. My thanks to the many amateurs from both WR6ABB and WR6ABE that came to our aid and got us down to sea level from atop Muhulland Drive, and a special thanks to George WA6MQM who is currently hard at work putting all the pieces together once more.

This morning, though, was the clincher. Though on its last legs, the old Cad was still running and I had to renew my driver's license. The Department of Motor Vehicles office is about a mile from here, so bright and early this am, I drove over and obtained my renewal. I was going to make a stop at one of my parts suppliers when I noted some steam from under the hood. Well, this car has had a water leak since I bought it, but it is always wise to check. Being almost at my house, I drove there and parked. Lucky I did, since it seems that the water pump and the radiator had given up at about the same time. Have you any idea what it's like to be sans wheels in Los Angeles? You cannot even get to the corner unless you have a car, and here I sit in our living room — the auto score, 2 down, 0 to go! Oh well! If '75 was bad, so far '76 could be classified as a disaster!

The Torino going down for repair came at the wrong time — just a week prior to SAROC. We had about given up hope of getting there when Rick WA6VSK offered us a lift across the Mojave to the fun city of Las Vegas. Three people and all the necessary luggage packed tightly into the confines of Rick's '72 VW bug. Reminds me a bit of a trip cross country in '70 with Lou K2VMR in his VW lovingly called BUGSY, but that's another story. Anyhow, aside from the sardine can sized transportation for which we will be eternally grateful, it was a most enjoyable trip with yours truly playing pilot. It should be noted that this area is enjoying (and I use that term loosely due to the fire hazard now present) a very warm and dry winter season. In fact as I write this, it is Feb. 2, the temperature is almost 80 degrees and kids are out swimming in the apartment house pool. While slightly cooler, the weather across the desert and in Las Vegas was similar. Beautiful.

Since I described SAROC last year in some detail, I will not bore you again with the same story. Suffice it to say that SAROC is unlike any other amateur radio convention in that the city of Las Vegas rather than the convention itself is the top attraction. Las Vegas is a world in itself and one of my favorite vacation spots. I really think that Vegas should adopt the motto "Have Fun and Enjoy" since that's what the city is really all about. Even the "losers" often smile.

Our first stop upon arriving at the Sahara was of course the registration desk where we found out that our pre-paid reservations for that hotel had been transferred to the Thunderbird since the Sahara was full up. I was set to "blow a gut" when I remembered that the Mt. Wilson Repeater Association was to be hosting a "Hospitality Suite." A quick call on Rick's HT brought forth the melodious tones of Bill Orenstein KH6IAF/7. Bill advised me to "cool my head" and come up to room 4022, better known as the "Mt. Wilson Repeater Association Friendship Suite." This was the "Dark Horse" of which I spoke in the column header. While the theme of most hospitality suites at conventions is one of "party-party," this one was different. It was kept low key — a place to get away from the festivities and regroup one's head. You were greeted by the state flag of Hawaii as you walked through the door, with soft music mostly of Hawaiian origin playing in the background. It was just a tranquil spot in the middle of the confusion that is any convention.

The room was made possible through the cooperative efforts of the MWRA, Worldradio News and Midnite Radio. If one must single out individuals who were responsible for the overwhelming success of this

Capt. Dick McKay K6VEP (left) and Gary Wood WA6DTX (right) enjoy lunch with John Johnston K3BNS, head of the FCC's Amateur and Citizens Division.

Wayne and Sherry visit with Lon and Sybil Albright of SANDRA in SAROC FM Hospitality Suite.

Bill Orenstein KH6IAF/7 (left) and John Marin WA2IEU show Wayne WR6ALD/7 in MWRA Hospitality Suite.

Squeak's "drinkie-talkie" — never saw that option in a Motorola catalog!

special kind of convention hospitality center, there are two people that then deserve special mention. First, Bill Orenstein KH6IAF, this time /7, for conceiving the idea, doing the legwork and giving up just about all his time at SAROC to play host. However, all this work would have been for naught if it were not for the fine cooperation given the MWRA and Bill by the Sahara itself. This cooperation came in the form of Mr. Billy Snyder, Executive Host and Assistant to the President of the Hotel Sahara. Working together, the MWRA and the Sahara had one of the nicest "let's get away from the convention for a while" spots to be found. Heck, it was the only such spot aside from our room at the hotel. Yes, we finally did get one by the way, though we had to wait a while. I guess patience will out.

Now, as if all the above were not enough, there was more. The MWRA is a user support organization for the Mt. Wilson based WR6ABE repeater. Being one of the busiest repeaters in the nation, it was conceivable that a goodly number of its members would be attending SAROC. For this reason, it was decided that a portable repeater might just be in order. John Barreiro WA6HQL made available a modified Heathkit HW202 which was further modified, converted and completed as a repeater by Kirk Nemzer WB6EGR. It was set up "split-site" with the receiver and its antenna on the top floor of the hotel and the transmit site on the balcony of the MWRA hospitality room. How does one go about tying the two ends together so that a system such as this can function? The MWRA electronics crew made use of the "house" phone system, of course. Now the frosting on the cake. It is always good to have an ID of some type on a repeater and a special events repeater such as this naturally requires a special ID. Again thanks to Bill KH6IAF/7, the voice of Mr. Jerry Lewis could be heard on 146.40 stating, "Fooled ya! This is not WR6ABE Los Angeles; this is WR6ALD/7 at the Sahara Hotel, Las Vegas, just the other side of the Colorado River thingie. Ha hahhhh." To read it is not to hear it, and one must have heard it to have really appreciated it. A lot of us did. Thanks, Jerry.

This was not the only portable system to show up. The Palisades ARC of Culver City was there as usual with its portable .01/.61 system, that thanks to Neil McKie WA6KLA, performed at its high level of efficiency. One must remember that PARC was in the forefront of supplying their membership with portable systems of this sort for occasions such as this. Someone else brought a .93/.33 system, I understand, but that never really went into full time operation.

UHF was well represented, with a number of remote owners bringing their goodies along for use by their people. One system, a full-blown remote, came in all the way from New Jersey along with its owners John Marin WA2IEU and his brother Tom WA2IKB. But, this year it was the MWRA that really stole the show when it came to both hospitality and portable repeaters, and for this "Looking West" must give them the "Hats Off Salute" this year. They deserve it.

Surprises, you bet your sweet bippie. I guess that the biggest one to yours truly was the guy who walked into the FM Hospitality Suite Friday evening. None other than *73*'s very own Mr. Green himself. I was just standing there talking with someone when it was suggested by someone else that I turn around. Surprise! More like shock. Wayne, why don't you warn me when you are going to pull these surprise visits!?

Anyhow, not long thereafter, in walks Bill KH6IAF and in short order, Wayne finds himself shanghaied up to the 40th floor to view the MWRA suite and the WR6ALD/7 repeater. As you can see from the photo, I get the feeling that our "leader" was somewhat impressed. Unfortunately, it was to be a brief visit that we would have that evening, but in the time we had to talk I was able to catch up with what has been happening back East. Wayne was the smarter of the two; after our get-together he went "73s" for the evening. Me, I was up most of the night talking with this one and that one. How I ever made it to the FM forum and the FCC forum the next day I will never know. Thank heavens that someone developed the cassette tape recorder.

At this point I should really get into a discussion of what Johnny Johnston talked about at the FCC forum, and until about 48 hours ago that would have been exactly what I would have done. However, something very important has transpired within the last two days that deserves very special attention now. Therefore, we will continue with our coverage of SAROC and the FCC forum held there next month. Right now it is again "Giving Credit Where Credit is Due" time, and it is with a heck of a lot of pride that "Looking West" salutes the accomplishments of a great many Southern California amateurs who have spent the last few days working hand in hand with the Guatemalan Consul General to Los Angeles in relief efforts to that earthquake-ravaged nation.

For time reference, this portion of "LW" is being written on the morning of February 9; it is exactly a week since I began to write this and the blue skies and warm temperatures of a week ago have since been replaced by an unending torrent of rain. Winter — the winter we have waited for has finally arrived. It's 1:11 am and about an hour ago I finally returned home from Los Angeles International Airport where I had spent the last 8 or 10 hours. As a writer it is strange to find yourself a part of your own story, but in this case it is what happened. I had gone to LAX to photograph and report on a rather unique and highly successful communication effort and within minutes found myself taking an active part in what was happening.

Problem: How do you get communication in and out of a country that has had most of its communication with the rest of the world severed by natural disaster? I guess you know the answer, since the answer is what we, the amateur radio community, are all about. Such was the situation in regard to Guatemala. Less than a week ago, that nation suffered a major earthquake that according to the latest network newscasts has taken 15,000 lives and effectively cut Guatemala off from the rest of the world save amateur radio. Though a number of area amateurs had been providing communication to Guatemala for the past few days, there had been no organized effort set up. The local consulate had been swamped with requests by local citizens as to the whereabouts of friends and relatives in Guatemala and the load was increasing as hours wore on. It was obvious that some fully organized effort was needed, one that would insure that a maximum number of health and welfare requests were handled while at the same time taking some of the load off the local consulate so that they could work on other important relief efforts. Such was the problem that Doug K4SWJ/6 posed to me on the telephone some 48 hours ago. Doug, like myself, is a member of the Palisades Amateur Radio Club of Culver City, and both of us felt that it was a definite obligation for PARC to take an active role in this project on a large scale basis. Saturday morning, February 7th, Doug called PARC President Dan Deckert WA6FQC and plans were formulated. The local

Continued on page 138

CONTESTS

Editor:
Robert Baker WA1SCX
34 White Pine Drive
Littleton MA 01460

CORRECTION

The Delta QSO Party will be held September 25-27 – not April 24-25, as listed in our April issue.

COMMON MARKET CONTEST

CW
Saturday, April 3
0600 to 2400 GMT
Phone
Sunday, April 4
0600 to 2400 GMT

Use appropriate mode on all amateur bands, 80 to 10 meters. Please keep the lower 10 kHz of the CW bands and the upper 25 kHz of phone bands free according to IARU recommendations. Entry classes consist of: single operator – all band, low band (80 and 40), high band (20, 15 and 10); multi-operator – single transmitter, all band only.

EXCHANGE:
RS(T) and QSO number starting from 001.

SCORING:
Common Market stations score 1 point for QSOs with other Common Market stations and 5 points for QSOs with others: multiply total QSO points by the number of DXCC countries on each band. Non-Common Market stations score 5 points for each Common Market QSO and 1 point for any other QSOs; multiply total QSO points by the number of Common Market countries worked on each band.

AWARDS:
Certificates to the highest scoring station in each country, in each entry class, on each mode. Trophies awarded to the highest scoring single operator in the Common Market on each mode and to the highest scoring single operator outside of the Common Market on each mode.

LOGS:
All entries must be mailed no later than April 30th to: Jacky Luyten, Ave. Max 134-b1, 1040 Brussels, BELGIUM. Please use the common log form style and do not forget a summary sheet.

Common Market Countries: Belgium, Denmark, France, W. Germany, Great Britain, Ireland, Italy, Luxemburg, Netherlands.

TRIPLE LETTER QSO PARTY

Starts: 1700 GMT Saturday,
April 24
Ends: 2000 GMT Sunday,
April 25

The contest is sponsored by the University of Missouri-Rolla ARC, WØEEE and is open to all amateurs. Any contact between amateurs is valid on any band 160 to 2 meters, using any mode. No repeater QSOs or cross-mode contacts will be allowed. Each station may be worked once per band per mode.

FREQUENCIES:
3950, 7215, 14290, 21375, 28600. CW – 45 kHz up from band edge.

EXCHANGE:
RS(T) and consecutive QSO number.

SCORING:
Each QSO counts for one point, with one extra point added for each repeated letter in the suffix of the station worked call. An extra point is also added for 2 letter suffix calls. (Examples: WB4GOP = 1 pt, WA7UMU = 2 pts, WØEEE = 3 pts, WØGS = 2 pts.) Total score is the total QSO points times the number of states, countries and provinces on each band, times the total number of triple letter stations on each band. Example scoring: 500 QSO pts x 67 (states, countries and provinces) x 24 triple letter stations = 814,000 pts total.

ENTRIES:
Send logs along with the usual data and declaration before May 20th to: Ward Silver WBØGQP, 590 Fieldstone, Ballwin MO 63011.

GEORGIA QSO PARTY

Starts: 2000 GMT, Saturday,
May 8
Ends: 0200 GMT, Monday
May 10

The 15th annual Georgia QSO Party is sponsored by the Columbus Amateur Radio Club. There are no time or power restrictions and contacts may be made once on phone and once on CW on each band with each station.

FREQUENCIES:
CW – 1810, 3590, 7060, 14060, 21060, 28060. SSB – 3900, 3975, 7245, 14290, 21360, 28600. Novices – 3718, 7125, 21110, 28110. Try 160m at 0300 GMT, try 10m on the hour, and 15m on the half hour during daylight hours.

EXCHANGE:
QSO Number, RS(T), and QTH – county for GA stations; state, province, or country for others. GA to GA contacts are permitted.

SCORING:
Each completed QSO counts 2 points. GA stations multiply total QSO points by number of different states and Canadian provinces worked. DX stations may be worked by GA stations for QSO points only; they do not count as multipliers. Out-of-state stations will use the number of GA counties (max. 159) worked for their multiplier.

AWARDS:
Certificates to the highest scoring station in each state, province, country, and GA county. Also to the highest scoring GA and non-GA Novice. Second and third place awards will be made in sections where additional recognition warrants. A plaque will be presented to the single operator and multi-operator GA stations submitting the highest score in each category. Plaques will also be awarded to the highest scoring out-of-state entry and to the highest scoring GA portable and mobile stations operating outside their home county.

LOGS & ENTRIES:
Your logs should show: date and time in GMT, station worked, exchange sent and received, band used, type emission, and multipliers claimed. Check lists will be appreciated. Include a signed declaration that all contest rules and operating regulations were observed and mail your entry to CARC, c/o John T. Laney K4BAI, Post Office Box 421, Columbus GA 31902. Entries should be postmarked no later than June 7, 1976. Please include a large SASE for a copy of the results.

VERMONT QSO PARTY

Starts: 2100 GMT Saturday,
May 8
Ends: 0100 GMT Monday,
May 10

The 1976 Vermont QSO Party is sponsored by the Central Vermont Amateur Radio Club in Montpelier VT. The same station may be worked once on each band and mode. Mobile stations may be worked in each new county (consider each new county they enter as a new station).

FREQUENCIES:
Try CW on odd hours and phone on even hours (GMT). 3560, 7060, 14060, 21060, 28160, 50260, 144-144.5, 3909, 7265, 14290, 21375, 28600, 50360, 145.8, 3932, 7290, 14325.

EXCHANGE:
QSO number, RS(T), and county for VT stations, or ARRL section for others.

SCORING:
VT stations score one point per contact and multiply by the number of ARRL sections and countries worked. All others score 3 points per VT station worked and multiply total by the number of VT counties worked on each band. Maximum of 14 counties per band.

AWARDS:
Trophies will be awarded to the highest scoring station outside of VT and to the highest scoring single operator station in VT. In addition, certificates will be awarded to the highest scoring station in each ARRL section and country with a minimum of 3 different QSOs. Certificates also will go to the 2nd, 3rd and 4th highest

CALENDAR

Apr 24 - 25	Triple Letter QSO Party
May 1 - 2*	MASS Bicentennial QSO Party
May 1 - 2*	Helvetia 22 Contest (H22)
May 8 - 10	Georgia QSO Party
May 8 - 10*	BARC Contest – CW
May 8 - 10	Vermont QSO Party
May 14 - 16	YL International SSBers QSO Party
May 15	World Telecommunications Day Contest – Phone
May 15 - 17	Michigan QSO Party
May 22	World Telecommunications Day Contest – CW
May 22 - 23	Wisconsin State QSO Party
June 4 - 7	IARS/CHC/FHC/HTH QSO Party
June 12 - 13	ARRL VHF QSO Party
June 12 - 13	RSGB National Field Day
June 12 - 14	West Virginia QSO Party
June 26 - 27	ARRL Field Day
July 3 - 4	QRP – Summer – Contest
July 3	ARRL Straight Key Night
July 17 - 19	CW County Hunters Contest
July 24 - 25	ARRL Bicentennial Celebration
Aug 14 - 15	European DX Contest – CW
Sept 4 - 5	ARRL VHF QSO Party
Sept 11 - 12	European DX Contest – Phone
Oct 8 - 10	CD Party – Phone
Oct 9 - 10	RSGB 21/28 MHz Contest – Phone
Oct 16 - 17	RSGB 7 MHz Contest – CW
Oct 16 - 18	CD Party – CW
Oct 30 - 31	CQ Worldwide DX Contest – Phone

* = described in last issue

scoring stations in VT. A special certificate will be awarded multi-operator and mobile stations operating in VT. QSO Party contacts can be credited toward the Worked Vermont (W-VT) Award issued to stations working 13 out of VT's 14 counties.

LOGS:

In order to be eligible for awards, logs or facsimiles together with an SASE must be mailed no later than June 15th to: Peter Kragh W1AYK, 170 Summit Avenue, Ramsey NJ 07446.

All band/mode activity is urgently needed from the counties of Bennington, Caledonia, Essex, Grand Isle and Orleans. Anyone interested in portable or mobile operation is asked to contact W1AYK or the CVARC.

RESULTS

RESULTS OF THE 1975 CW COUNTY HUNTERS CONTEST

High score – fixed	WB4OGW	433,048 points (new record)
High score – portable	WAØKXJ/6	220,869
High score – mobile	WA5KQD/m	438,658 (new record)
Composite mobile score	KØDEO	292,358

There were a total of 301 counties activated by portable/mobile stations during the contest, while the total number of counties worked by contest stations was 613. The highest number of different counties worked by any single entry was 407 counties (WB4OGW). The winners in each state and category are as follows:

STATE	CALL	SCORE (pts)	
CONN	WA1KMP	48,723	fixed
ME	W1APU	4,750	fixed
MASS	W1AQE	65,860	fixed
VT	K1IIK	21,930	fixed
NJ	WA2DFC	47,125	fixed
	K3NVC	16,720	portable
NY	W2MEI	204,428	fixed
MD/DC	W3HQU	192,375	fixed
PA	W3ARK	150,960	fixed
	W3ZUH	8,601	mobile
FLA	WB4OGW	433,048	fixed
	W4OZF	19,313	mobile
GA	WB4QGN	355,616	fixed
KY	W4KFB	10,296	fixed
NC	K4ENL	89,240	fixed
	W4OMW	2,600	portable
SC	W4MCQ	11,766	mobile
TENN	WB4CQC	8,662	fixed
	WB4WHE	2,904	portable
VA	W4KMW	2,640	fixed
MISS	W5RUB	68,425	fixed
TEX	W5RPJ	22,620	fixed
	WA5KQD	438,658	mobile
CAL	W6CLM	7,068	fixed
	WAØKXJ	220,869	portable
	W6OKX	5,974	mobile
IDAHO	W7GHT	122,286	fixed
MONT	W7JYW	14,784	mobile
ORE	WA7GOO	108,624	fixed
	WA7GOO	6,600	mobile
UTAH	W7ZC	24,072	fixed
WYOM	WAØNZA	4,032	mobile
MICH	WC8CAL	15,554	fixed
	W8KPK	2,142	portable
	W8CXS	37,833	mobile
OHIO	K8QWY	161,460	fixed
	W8RYP	24,030	mobile
WVA	W4UM	4,056	portable
ILL	W9AXT	11,004	fixed
IND	K9UKM	140,750	portable
	WA9WIF	5,610	mobile
WISC	W9PJT	117,700	fixed
	K9DAF	53,428	portable
	WB9ONA	16,737	mobile
COLO	WBØJGT	7,866	fixed
IOWA	WØII	10,560	fixed
	KØDEQ	78,522	mobile
KANS	KØDEQ	17,995	mobile
MO	KØLIR	40,584	fixed
	WØQWS	24,297	mobile
NEBR	WØQNP	1,998	fixed
	WB9DED	27,951	portable
	KØDEQ	29,631	mobile
SDAK	KØDEQ	1,652	mobile
Nova Scotia	VE1AHG	17,765	fixed

YL INTERNATIONAL SSBers QSO PARTY

Starts: 1901 GMT Friday, May 14

Ends: 1900 GMT Sunday, May 16

All bands will be used on CW and phone and the same station may be contacted on different bands for contact points but not for country multiplier. Use country multiplier only one time. The QSO Party is in three categories: DX/WK teams, YL/OM teams, single operator. Non-members are welcome to participate and QSO party logs will be accepted for SSBers awards in lieu of QSLs.

EXCHANGE:

Name, RS(T), SSBers number (send no number if non-member), country, state, partner's call (if no partner leave blank).

FREQUENCIES:

CW: 3565, 7085, 14070, 21070. Phone: 3873, 7273, 14333, 21373, 28673.

Some European stations cannot work in the US phone band on 80 or 40 meters; when calling them please announce that you will tune around 3775 or 7090.

SCORING:

Contact with SSBer member on same continent = 2 pts phone, 4 pts CW. Contact with SSBer member on different continent = 4 pts phone, 8 pts CW. Non-member contacts = 1 point phone, 2 pts CW. Multipliers are number of different DXCC countries (must be YL-ISSB members), US states, DX/WK teams, and YL/OM teams regardless of bands. Final score is total QSO points times total multiplier.

AWARDS:

Plaques will be awarded to the highest individual score, DX/WK teams, and YL/OM teams, as well as to the highest score single operator. Certificates to first and second place in country and state. No certificate to plaque winners.

CATEGORIES:

DX/WK team – Each team consists of a DX and W/K SSB member. The team score is the sum of both partners. Score will be determined when both logs are received. If only one log is received it will be scored as a single operator entry. All stations entering the DX/WK team category should immediately send a request to W7EOI. You may choose your own partner or, if you have no choice, W7EOI will assign one to you as requests are received. All requests must be in writing (for records) except DX stations who may make their requests through system controls. One week preceding the QSO Party, teams requesting to be recorded may do so through system controls during daily operation. No team assignments may be made after the party begins.

YL/OM team – Each team consists of one YL SSB member and one OM SSB member who are related: husband/wife, father/daughter, etc. Operation must be from the same QTH, using the same rig with his/her own call.

LOGS:

All logs must show date and time in GMT, RS(T), SSBer number, partner's call, mode and period of rest time. Each entry must operate a minimum of 6 hours with a minimum of 6 hours rest period for each 24 hours of contest period. Logs should be postmarked on or before June 30th and be received on or before July 15th. Send logs to: Lyle Coleman W7EOI, 412 - 19th Street SW, Great Falls MT 59404.

For free QSO Party entry form (no logs), send an SASE to: Robert Baker WA1SCX, 34 White Pine Dr., Littleton MA 01460.

MICHIGAN QSO PARTY

Starts: 1800 GMT Saturday, May 15

Ends: 0200 GMT Monday, May 17

The QSO Party will be sponsored by the Oak Park Amateur Radio Club. Phone and CW are separate contests, but a station may enter logs for both modes. MICH stations may work MICH counties for multipliers. A station may be contacted once per band on each mode. Portable or mobile stations may be counted as new contacts when they change counties.

FREQUENCIES:

CW – 1810, 3540, 3725, 7035, 7123, 14035, 21035, 21125, 28035, 28125. 1600 - 1900 GMT try phone: 1815, 3905, 7280, 14280, 21380, 28580. Try 15 meters on the hour and 10 meters on the half hour. On VHF, try: 50.125 and 145.025.

EXCHANGE:

RS(T), QSO #, QTH – county for MICH stations, state or country for others.

SCORING:

MULTIPLIERS ARE COUNTED ONLY ONCE. MICH stations score one point per QSO times the total number of states, countries, and MICH counties worked. Non-MICH stations score QSO points as: 1 point for each W/KWA/WB8 MICH QSO, 5 points for each WN8 and special events station QSO. Total score is sum QSO points times the number of MICH counties worked (83 max.). VHF only entries score same as above except multipliers per VHF band are added together for total multipliers.

AWARDS:

Only single operator stations qualify. Trophies will be awarded to MICH stations for: high CW, high phone, high aggregate club score. Plaques will go to high Novice, high VHF only entry. Certificates to high CW and phone in each MICH county. For non-MICH stations, trophies for high

CW and phone. Certificates for high CW and phone in each state and country. Members of the Michigan Week QSO Party Committee are not eligible for individual awards.

ENTRIES:

A summary sheet is requested showing the scoring and other pertinent information, name and address in BLOCK LETTERS, and a signed declaration that all rules and regulations have been observed. MICH stations include name of club for combined club score. Party contacts do not count toward the Michigan Achievement Award unless one fact about MICH is communicated. Decisions of the Contest Committee are final. Results will be final on July 31, 1976 and will be mailed to all entries. Mailing deadline is June 18th and should be addressed to: Mark Shaw WA8EDC, 3810 Woodman, Troy MI 48084.

WORLD TELECOMMUNICATIONS DAY CONTEST

Phone
Starts: 0000 GMT Saturday, May 15
Ends: 2400 GMT Saturday, May 15
CW
Starts: 0000 GMT Saturday, May 22
Ends: 2400 GMT Saturday, May 22

This is the seventh running of this annual contest sponsored by the Brazilian Ministry of Communications and is open to all amateurs. Categories include: single operator multi-band, or fixed/maritime mobile stations operating from ITT Zones 76 to 90. Use all amateur bands from 160 to 10 meters. Contacts with the same station are allowed on different bands, but ITU zones are valid only once as a multiplier regardless of bands.

EXCHANGE:

RS(T) plus ITU zone number. (Please remember that the ITU zone numbers are different from those shown on the ARRL and CQ maps and charts.)

QSO POINTS:

Contacts with stations in the same country = Ø points. Contacts with stations in different country same ITU zone = 1 on 10 to 40 meters, 2 on 80 and 160 meters. In another ITU zone, same continent: 10 to 20 meters = 2 points, 40 meters = 3 points, 80 and 160 meters = 4 points. Another ITU zone, another continent: 10 to 20 meters = 3 points, 40 meters = 5 points, 80 and 160 meters = 6 points.

SCORING:

Final score equals sum of QSO points times total number of different ITU zones. ITU zones only count once regardless of bands.

LOGS:

Use separate logs for each mode. Logs should indicate in this order: GMT time, worked station, message sent/rcvd, band, continent, zone (and multipliers), QSO points. Logs should be postmarked before June 30th and sent to: Ministerio das Communicacoes, Dentel, Brasilia, D. F. Brazil.

AWARDS:

The sum of points earned by the top five contestants of each country on each mode will be used as "Country Points" to determine the winner of the ITU trophy. A winner country for three consecutive years or five interspaced years will keep the ITU trophy permanently. Gold, silver and bronze medals will be awarded to the three top world scorers on each mode. Diplomas will go to the three top scorers in each country, on each mode. Countries with a high number of logs will be granted diplomas to the first three in each call area.

Clubs and associations will be included in a special multi-operator multi-band category and will not be counted for country points. A silver plate will be awarded to the top world winners on each mode. Diplomas will be awarded to the three top winners in each country on each mode. Logs must be signed by all participants from each club or association.

WISCONSIN STATE QSO PARTY

Starts: 0000 GMT Saturday, May 22
Ends: 2400 GMT Sunday, May 23

This is the annual QSO Party sponsored by the Neenah-Menasha Amateur Club. Phone and CW are considered separate bands. The same station may be worked on each band and mode. Wisconsin stations may work other Wisconsin stations for QSO and multiplier credit.

FREQUENCIES:

1810, 3550, 3735, 3900, 7050, 7135, 7235, 14050, 14280, 21050, 21135, 21300, 28050, 28600, 50-50.5, 144-146.

EXCHANGE:

RS(T) and QTH — Wisconsin stations will send their county for QTH, others send ARRL section or country.

SCORING:

US and VE contacts count one point while DX contacts count 3 points for Wisc stations. All others score one point per Wisc contact. Wisc stations are to multiply the total QSO points by the number of ARRL sections contacted (74 max.); KP4, KH6, KL7 and KZ5 count both as 3 point QSOs and as section multipliers. All non-Wisc stations should multiply the number of Wisc QSOs by the number of Wisc counties worked (72 max.).

AWARDS:

Certificates will be awarded to the high scoring fixed, portable, mobile, Novice, and VHF stations in Wisc as well as each ARRL section and each DX country.

ENTRIES:

A summary sheet and station log are requested. Indicate each multiplier the first time worked. Logs must be received no later than June 15 (DX logs by July 1). All entries should be addressed to: Neenah-Menasha Amateur Radio Club, Inc., Mark Michel W9PJT, 700 Kinzie Court, Menasha WI 54952.

MICHIGAN ACHIEVEMENT AWARD

The Governor of Mich will award Achievement Certificates to hams who take an active part in telling the world of Michigan's unlimited resources, opportunities, and advantages. Certificates are awarded on the following basis:

1. A MICH ham submits log information and names (addresses if possible) of 15 or more contacts made to out-of-state or DX hams with information regarding MICH.

2. An out-of-state ham, including Canada, submits log information and names (addresses if possible) of at least 5 MICH hams who relate facts to him about MICH.

3. A foreign ham, excluding any resident of Canada, submits the call letters and name/address plus log information for at least one MICH ham who told him about MICH.

Only QSOs made during MICH Week, May 15 - 22, will be considered valid. All applications for certificates must be postmarked by July 1, 1976 and mailed to Governor William Milliken, Lansing MI 48902.

OVER FORTY NOVICE CLUB

Did you know that there is now an "Over Forty Novice Club" for Novices over 40 years of age? If you know of any Novices who meet the requirements please pass the word on to them. If you qualify yourself, you are welcome in the club.

An HONORARY Membership is also available to hams of General Class and above (any age) who have contacted at least 10 Novices since January 1, 1976, and can supply a list of calls and dates of contact.

You will receive a handsome certificate (suitable for framing) and a membership card for your wallet by sending $2.00, plus 25¢ for mailing and handling, to: O.F.N.C., P.O. Box 622, Carson City NV 89701.

The reason for the club is to offer camaraderie to those Novices trying for their General in the age group of 40 and over. Further, to encourage the more experienced hams to contact Novices and help them to improve by benefiting from their extensive experience. Last but not least, to maybe give a little incentive to those of our age group who are considering joining the rewarding hobby of amateur radio.

WEEKLY PROPAGATION

A free weekly propagation forecast is offered by the Telecommunication Service Center. Anyone interested in receiving the forecasts should submit their name and address to: US Dept. of Commerce, Office of Telecommunications Center, Boulder CO 80302. Ask to have your name added to their weekly mailing list. The reports include a propagation forecast of conditions for the next seven days, a summary of conditions and solar activity for the preceding seven days, a 12 month running average prediction of sunspot numbers, and semimonthly revised ionospheric predictions.

In addition, the latest six hour forecasts may be obtained at any time by phoning 303-499-8129. The recording is updated every 6 hours, seven days a week. Also included in the recording are the latest 3 hour index of geomagnetic activity and the most recent value of the solar flux reported from Ottawa, Ontario.

RESULTS

RESULTS OF THE 1975 DELAWARE QSO PARTY

Highest scoring DEL station was K3YHR with 16,064 points. Highest scoring station outside DEL was WN1UYU with 325 points.

DELAWARE Stations . . .

County	Call	Total Score
New Castle	K3YHR	16,064
	K3HBP	11,078
	WA3DUM	330
Keny	WA3UUN	3,192
	K3QBD	544
	W3ZNF	160
Sussex	WN3WIY/3	108

Out of DEL Stations . . .

State/prov/country	Call	Total Score
Vermont	WN1UYU	325
Connecticut	W1TEE	225
New Jersey	WA2VYA	30
Pennsylvania	WA3KFT	5
Kentucky	WB4AJA	5
Michigan	WB8TNC	45
JAPAN	JA2HLX	25

Benjamin F. Jacoby
88 W. Frankfort St.
Columbus OH 43206

The Magnificent Sevens Microhelix

7 feet, 7 MHz

The matching of a low band antenna of reasonable performance to either the high impedance of the Novice wallet or the much less than a quarter wavelength size of a city lot is a problem which not only faced me when my ticket arrived, but also can crop up on field day or in portable operations. When you only have room for a ten meter antenna and most Novice activity is on 40 and 80 meters, obviously you need a little of that spirit you sometimes hear from an old timer when he recalls the days when a rig was improved by rebuilding, rather than giving up two months pay for another brand or later model.

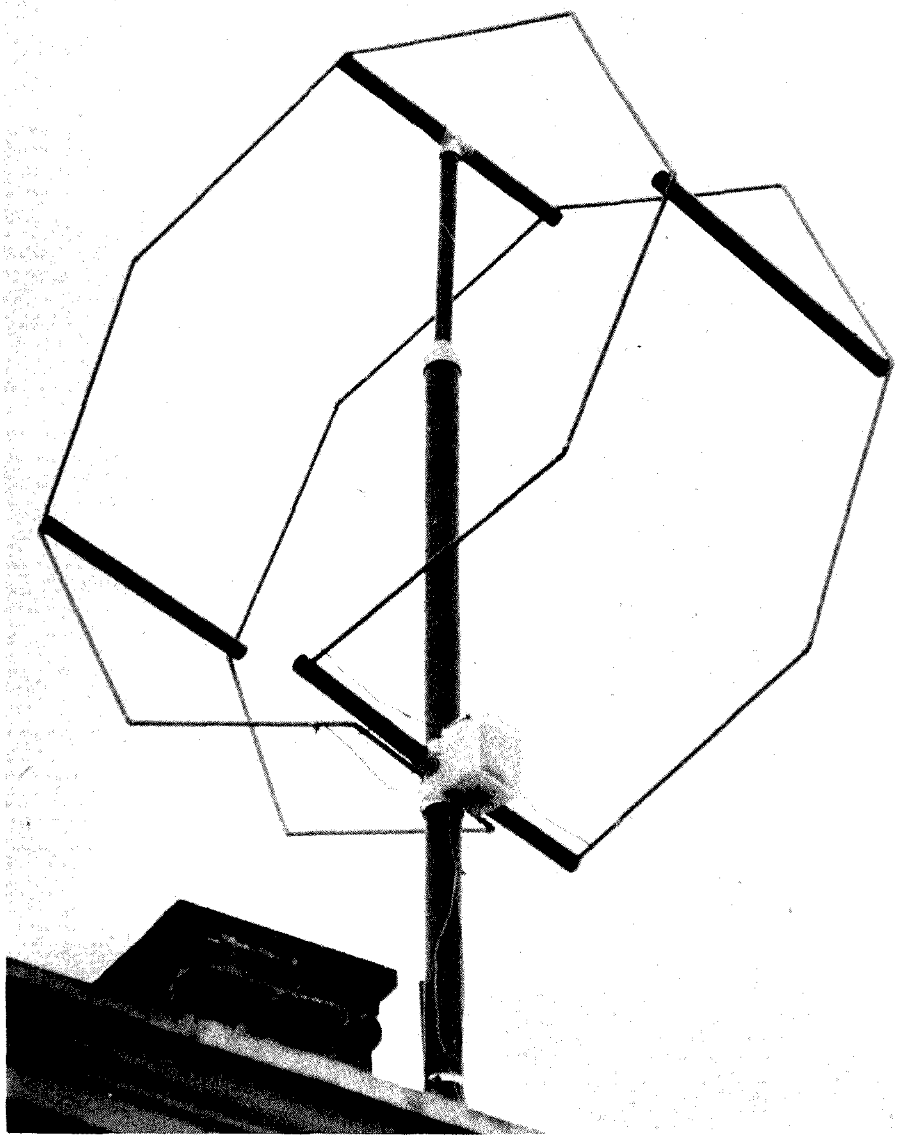

Clearly, for a single band antenna, the frequency range of interest is quite narrow, covering 500 kHz at most and extending only 50 kHz (if only the Novice portion of the band is tuned). It is well known that an antenna whose size is a small fraction of a wavelength can provide an output equivalent to the full sized version, provided it is properly matched and losses are kept low. As the size of an antenna is reduced, a reactive component of the driving point impedance appears, and must be cancelled by one of opposite sign to leave the purely resistive radiation resistance term. A further complication is that as the antenna is made smaller and smaller the reactive cancellation becomes more and more frequency-dependent, requiring a "tuning" of the antenna as its operating frequency is changed.

Another undesirable side effect of the reduction in size

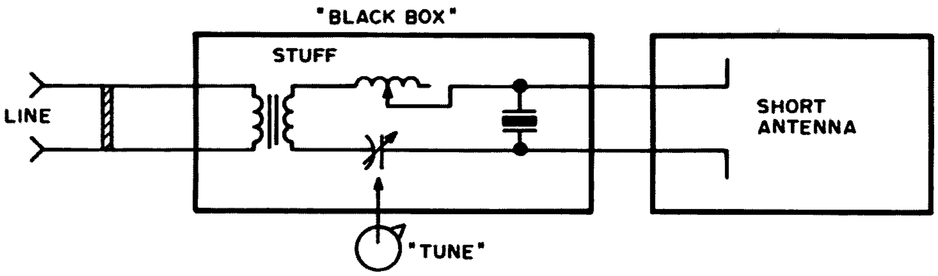

Fig. 1. The "nub."

is a reduction in the value of the radiation resistance, so that, even when the reactive components of the driving point impedance are eliminated, a transformer of some kind is required to raise the resistive portion from a value (in some cases) as low as a fraction of an Ohm to something suitable for matching a transmission line of reasonable dimensions.

Thus, the conceptual nub of our problem is a black box providing the matching functions necessary to make our small antenna have an output equivalent to a large one, i.e., to convert the undesirable output characteristics to those required to match the feed line. I found much poo-pooing of tuned small antennas among amateurs, because of the high losses found in most standard matching networks (although W2FMI has done much work with this approach and has reported excellent results in many *QST* articles). It seems to me, however, that many of these problems have arisen because attempts were made to actually build a "black box" full of coils, caps and stuff, rather than to allow the black box to remain simply a concept, which is then used as a starting point for thinking.

Let us do some thinking about losses. Losses in the antenna itself increase as the size of the antenna is reduced and it becomes more and more reactive. This is because increased reactance results in larger and larger currents flowing on the antenna, causing it to act more as a heater than an antenna. The answer is to make our antenna out of some low resistance material like silver and, further, to increase the surface area where the currents are flowing as much as possible, since heating is an I^2R effect and a small reduction in current density makes for a relatively large drop in losses. Hence, wire is out! Large diameter low resistance pipe is *in*. For experimenting, I chose easily soldered copper tubing in a relatively inexpensive and lightweight ½" size.

As an aside, I would mention that I once saw an article for the construction of a small low frequency antenna from steel exhaust pipe. This is the worst possible choice, since it is heavy, hard to work with, relatively resistive, and throws in, as a bonus, magnetic losses not found in non-magnetic metals. If your shack is heli-arc equipped, one inch or so diameter aluminum tubing would probably result in a much lighter antenna.

Our small antenna problem is now reduced to determining the configuration into which our pipes will be soldered, so that the antenna will become its own impedance matching network. Since it is usually much easier to step an impedance down (rather than up) without a transformer, we can ask, "Are there any short antennas with resistive terminal impedances larger than standard coax?" An inspection of short dipoles, loaded whips, etc., is discouraging, but wait! Again it's J. D. Kraus to the rescue. In his classic *Antennas* textbook we find that the small helix can have this property.

An examination of a typical impedance plot for a helical antenna, as given in Kraus and sketched in Fig. 2, shows that when the circumference is on the order of a wavelength, the terminal impedance is mostly resistive and loops around a value suitable for matching a standard coaxial line for a wide range of frequencies (producing the well-known broadband matching characteristics). In this size the helix radiates along its axis and hence is called an "axial mode" of propagation. As we go lower in frequency or build smaller and smaller antennas, these loops suddenly become very large and now pass quite quickly through the purely resistive points. Moreover, the antenna now radiates perpendicular to (i.e., "normal to") the axis of the helix and is thus termed the "normal mode" of propagation. For normal mode operation we are usually talking about maximum dimensions of less than one-half wave. In conclusion, it is seen that the normal mode helix has two useful operating points where the reactive impedance is zero: one where the resistive value is low (which would give rise to a matching problem equivalent to that of a short dipole), and also a high resistance operating point with a value much greater than standard coax (that can easily be matched by a tap down arrangement so that the antenna can, in effect, act as its own matching transformer).

Now that you know where on the impedance plot you wish to operate, the trick is to put that point at the frequency at which you wish to operate. Since an alteration

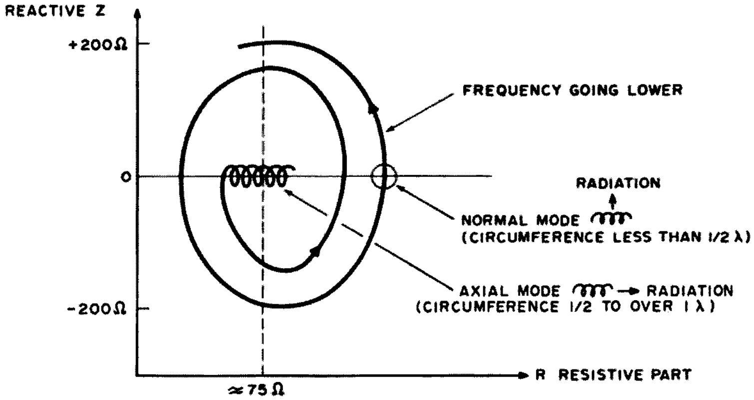

Fig. 2. Helix terminal impedance.

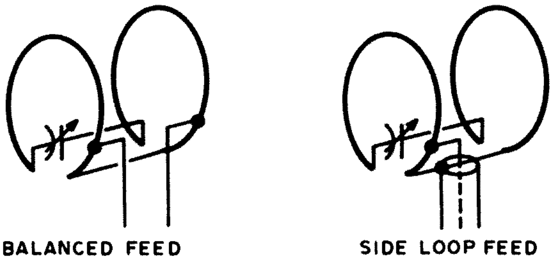

Fig. 3. Feedpoints.

of the scale of the antenna is more or less out, I chose an end-loading capacitor ($\approx$ 40 pF) between the two loop ends to electrically alter the antenna's apparent length. This has the disadvantage of putting your tuning element at the high voltage point of your antenna, but does result in a small C variation (thereby resulting in a wide tuning range, which, with careful construction, does not arc over at Novice power levels). Other tuning methods are possible, including warping the antenna to alter its size (which would probably be a superior method if high power operation were a goal).

I am not going to be too specific on the actual construction details, since this project is basically a junk box el cheapo affair. Each loop is made by the mathematical operation of dividing four ½"D 10 ft. copper tubes into four 30 inch pieces each, and using standard 45° pipe fittings to solder up 2 octagons, about 2 meters across. They are not completely joined, however. One connection is left unmade, where the two loops are joined crosswise by a short piece of tube and two 90° elbows to make a 20" separation between the joined ends of the loops. The other ends are stretched out to 39" when mounted and the tuning capacitor is connected between them. The whole works is supported on a mast and crossmembers made of ABS plastic sewer pipe. I have found that the availability of sewer pipe and fitting varies considerably from time to time and from store to store, so I leave it to you to resonate the bins at your local plumbing supply to get a combination that will work. Metal supports and towers will tend to soak up your power, so try to keep them away – but if you use much pipe as a mast, probably 6" ABS would be better than the 4" I used. I have survived 60-70 mph winds on 4" but as you can see in the photo my mast section is very short. As a finishing touch, the copper can be cleaned and sprayed with clear plastic to protect it from corrosion.

Finally, I would just like to say a few words about the tuning capacitor. I would suggest a plate spacing of at least ¼ inch. This may seem large, but remember that it is located at a high voltage point on the antenna and I had some trouble with arc-overs in damp weather. A vacuum variable would be the optimum, but tends to be rather expensive (even surplus). If you only wish to tune the Novice band, a tuning motor is not necessary, but I predict that if you don't take time to install one, later you will wish you had (especially since I've noticed a slight shift of tuning point with the weather). I used a plastic refrigerator box to protect the capacitor and motor from the weather, and silicon bathtub seal is great for waterproofing the lid. In choosing a motor you will doubtless find as I did that you really need one much slower than you would think. My ½ rpm still seems rather fast. BE SURE THAT BOTH THE STATOR AND ROTOR OF THE CAP ARE ISOLATED FROM GROUND (MOTOR). I used plastic for the mounts and a ceramic shaft insulator.

Optimum feed is a balanced connection at symmetrical points on each loop (as shown in Fig. 3) with a balun if coax is used, but my loop feed to one side also seems to work with coax and is cheaper. Good low loss connections are also important in this feed network as well.

Now that our basic plan of attack is laid out we can begin to examine the specifics of helical antennas. We note that there are several critical dimensions suitable for variations in experimenting, including the turn diameter, the pitch of each turn, and the number of turns. Helical antennas can be built with or without ground planes, but since the ground plane is just a device used to eliminate the construction of the other side or "image" of an antenna, and since it has been my experience that a ground plane really has to be large and relatively conductive to be effective, it seems to me that unless you have a copper roof it is far easier to just build the image structure than to construct a huge ground plane to save a few feet of pipe. There is a relationship between circumference and pitch which results in circular polarization and is given in Kraus as

$$C_\lambda = 2 S_\lambda,$$

where C_λ and S_λ are the respective circumference and pitch in fractions of a wave-

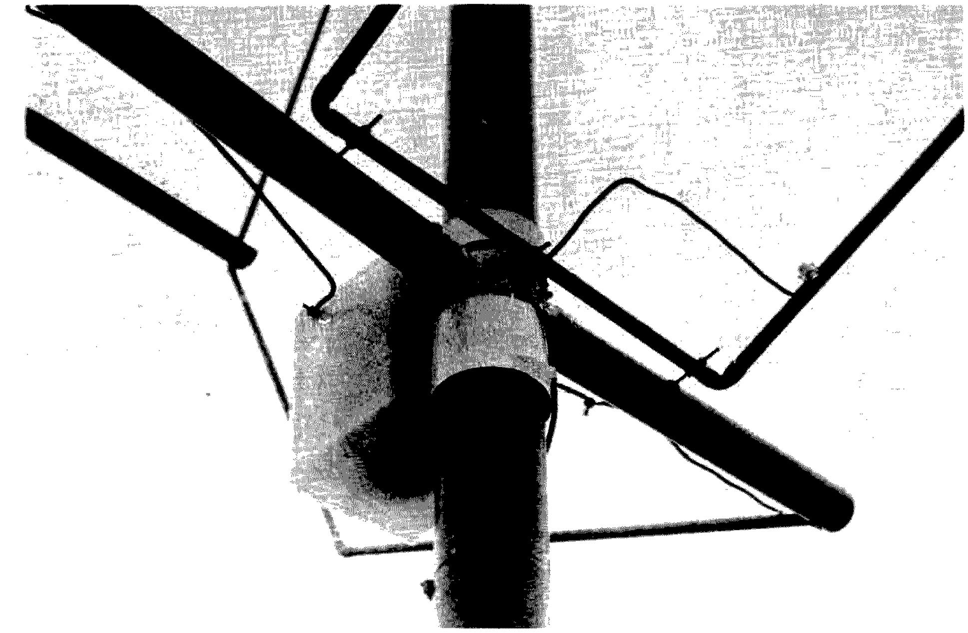

length (but I see no special advantage in insuring circular polarization for amateur use).

The final choice of circumference, pitch, and number of turns now becomes a matter of experimentation and the antenna "arts." As a rule of thumb, it probably pays to make the diameter as large as the mechanics of mounting it allow and, for simplicity, I chose n equal to one (i.e., one turn on each side). The pitch can go from zero to any reasonable value, and it is interesting to note that in this light the mysterious DDRR antenna would appear to be nothing more than a normal mode helix of pitch zero with a ground plane. The pitch on my final antenna version was determined experimentally and was used only because it seemed to work the best, rather than because of some long-winded theoretical justification. I used small ¼" copper tubing for my feed connections.

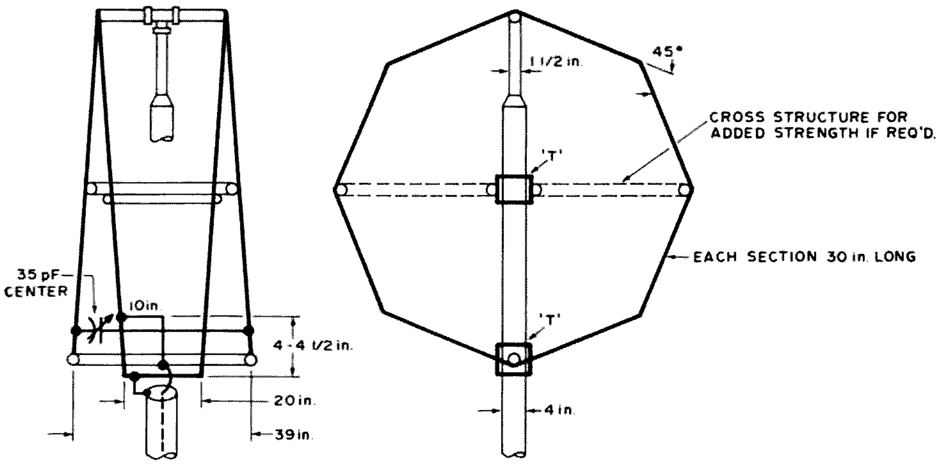

Fig. 4. Forty meter normal mode helix.

The antenna pattern is directional, having a figure 8 dipole pattern when mounted with the helix axis horizontal and a low angle omnidirectional radiation when mounted with the helix axis vertical. For all around use with both high and low angle radiation, the horizontal mounting is best, while for DX a vertical axis mounting with the antenna ¼ wave above the ground should give optimum results.

The swr of the antenna should be less than 2 over the entire Novice band and should be phenomenally close to 1 at the frequency to which the antenna is tuned — if your matching tap is properly located.

I have compared this antenna to a wire dipole and found it to be only a little over one dB down. Here in the city, however, the big problem is not signal but noise, and the helix clearly had less noise pickup than the dipole. Weak signals that were nearly obscured by noise with the dipole were easily copyable with the helix. ■

An Allband Inverted Vee

Eugene G. Preston WA5FGC
906 Cedar Glen
Austin TX 78745

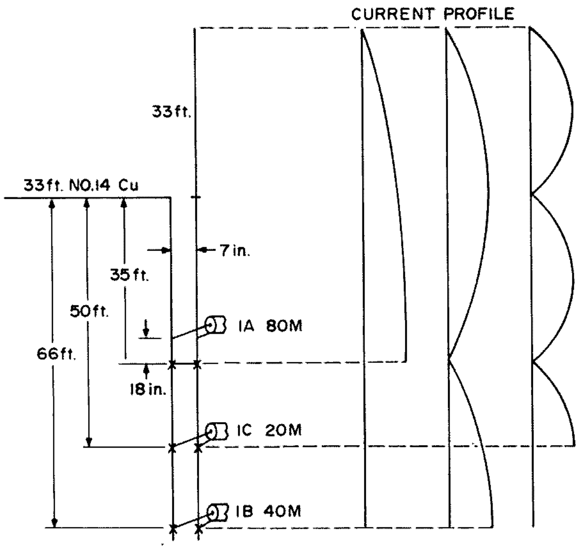

Fig. 1. First allband antenna.

An allband antenna system has usually meant an antenna farm. The original objective in this case was to have just one antenna, without loading coils or traps, that would fit in the restricted space at this QTH, yet be able to operate efficiently on all the high frequency ham bands. The task did not appear to be easy.

Several antenna systems described in the *ARRL Antenna Book* were successfully used during the last three years, but each had some problem that would finally be cause for rejection. The main problems encountered were rf burns from touching the rig while operating, arcing, coil overheating, the need to slightly retune the transmatch after QSY, and poorer signal reports when compared with an ordinary dipole. The decision was made that the antenna system should incorporate the following characteristics:

1. A single section of 50 Ohm coax from the transmitter to some remote point helps minimize rf problems in the shack, especially if the coax is buried for several feet.
2. A single section of open wire transmission line would be used as a matching element. The only adjustable connections to this line were to be a jumper or shorting element and the coax itself. Series switches, shunt matching stubs, and shunt variable capacitors were ruled out.
3. The antenna was to be a single inverted vee. The open wire line would feed the inverted vee in the center to maintain an almost balanced radiating system.

Two antenna systems were developed and tested. Figs. 1 and 2 are schematic representations of the two systems, showing dimensions of the elements and the coax tap location for operation on different ham bands. Figs. 3 and 4 show swr curves associated with Figs. 1 and 2, respectively. The center frequency of all these curves can be easily shifted by relocating the coax tap point.

There are three different ways the open wire line can be used. The first matching technique is shown in Fig. 1A. Short dipoles can be easily resonated by positioning the jumper at the maximum current point on the line. The coax feed point for 50 Ohms will be a short distance from the jumper if the current in the line is large. This method simply makes the line look like an autotransformer. A perfect match can be obtained for a specific frequency, but the antenna has an undesirably high Q.

The second matching technique is shown in Figs. 1B and 1C. This is the best and most interesting matching technique. The 650 Ohm open wire line has an almost magical ability to match an inverted vee of any length if the inverted vee is not too short at the lowest desired frequency. Equations for half wave and quarter wave matching are well known for cases where the antenna is a half wave or full wave inverted vee, respectively. What is not so well known is that the line will also match any other antenna length provided the length of one leg of the inverted vee and the length of the line sum up to an odd multiple of a quarter wavelength. This fact, which was discovered by experiment, is the basis for the success of this unique matching system. From a reactive standpoint the length of the antenna is no longer of significance since a line length can always be found to compensate for the antenna reactance.

The third matching technique is shown in Figs. 2A and 2B. The coax feed point is put further down the line than the maximum line current location. This increases the resistance to 50 Ohms but also introduces series inductive reactance. A variable capacitor is introduced in series with the coax and line to tune out the inductive reactance. In Fig. 2B a shunt capacitor makes a voltage divider if the resistance is greater than 50 Ohms. Notice the highly useful double resonance condition produced by this circuit as shown by the swr curve in Fig. 4B.

Construction of this

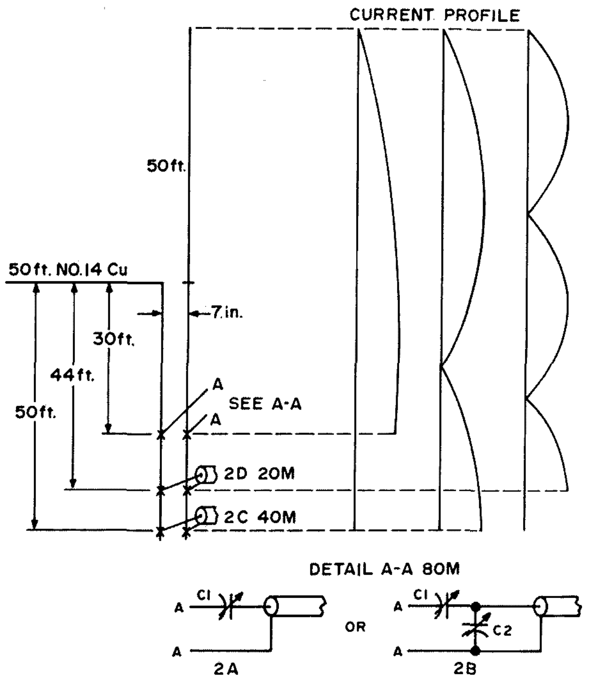

Fig. 2. Second allband antenna. Note: A jumper placed ¼λ down the line may improve the swr on 20, 15 and 10 meters.

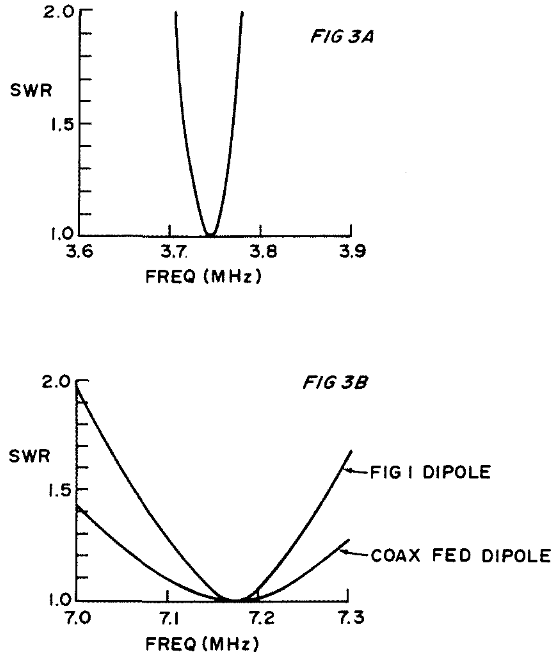

Fig. 3. Swr curves for Fig. 1.

antenna system is simple since tuning is done after all elements have been erected or installed. The inverted vee is a 100 foot roll of number 14 copper wire that was cut into two 50 foot sections. The open wire line was made from another 100 foot roll of number 14 copper wire. The tower used for center support was constructed from three 18 foot, 2 x 4 sections of wood and has a height of 30 feet when raised. The open wire line is brought down the tower using TV type standoff insulators for support and spacing. They are screwed directly into the wood to provide six to seven inches spacing between the open wire conductors. The number of supports should be minimized to reduce losses from leakage currents. Also, the TV type supports will need additional insulation if arcing is observed. A one inch length of RG/8 insulation slipped into the TV spacer with the number 14 wire run in the center of the insulation has worked well for me, even in rainy weather. Since the open wire line is longer than 30 feet, it is continued along the side of the house with the same construction techniques just described.

Several months' operation on the air providing signal strength comparisons with other hams and the ability to be heard in pileups was convincing evidence that this system performs as well as a farm of dipoles. Although the antenna shown in Fig. 2 tunes broadly on 80 meters, the shorter antenna in Fig. 1 produced comparable reports. The Fig. 1 antenna would be ideal for the Novice who wants to operate on 80, 40 and 15 meters with a single 40 meter dipole but is restricted to a narrow frequency range or has insufficient property for a full 80 meter dipole. The antennas and their matching systems described in this article have eliminated the transmatch, reduced rf in the shack, reduced antenna losses, reduced antenna costs, and increased the frequencies available from a single inverted vee antenna. ■

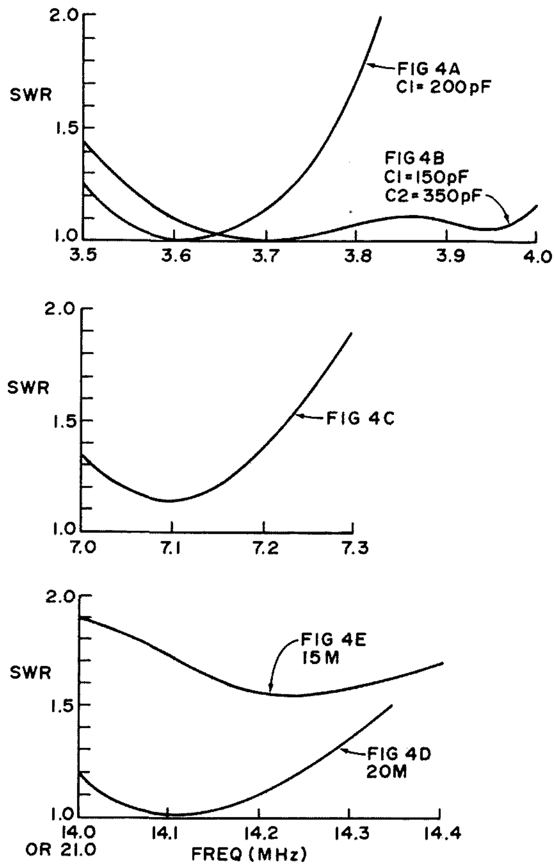

Fig. 4. Swr curves for Fig. 2.

73 Magazine *Staff*

Squaring the Conical

If you don't mind having an antenna in your yard which looks a bit like a piece of modern art, the conical monopole has some extremely interesting advantages. The form described here can be constructed inexpensively from TV masting and lots of wire. It is extremely rugged and stormproof since, as will be seen later, it is practically the equivalent of having a 30' high TV mast guyed by about 200 small guy wires!

The conical monopole as such is not a new form of antenna. It has been widely used on VHF and sometimes on the HF bands, formed in its usual circular shape as shown in Fig. 1. It is a vertically polarized antenna and offers extremely broad bandwidth while maintaining a low swr. In a sense, it is similar to the wide-band discone antenna, although it does not have the large "tophat" element required of the discone. The antenna functions over a broad frequency range because the circumference of the cone-shaped monopole becomes resonant at different frequencies as determined by the extent of the circumference variation from top to bottom of the monopole. Within the frequency range for which the antenna is constructed, therefore, it is continuously in resonance rather than just being resonant in certain distinct bands. A typical frequency range spread for such an antenna is about 4:1 although this will vary a bit depending upon the exact design used.

The design presented in this article covers basically from 80 through 20 meters. However, it will show good performance up to about 19 MHz or so. So, if the 18 MHz band ever becomes a reality in the distant future, the antenna would, in fact, continuously cover 5 amateur bands (80, 40 and 20 plus the proposed 12 and 18 MHz bands). The antenna is fed directly with 52 Ohm coaxial cable and requires no additional tuning devices. A simple loading coil can be switched in at the base of the antenna to extend its range to 160 meters, if desired, and it should show very creditable performance on this band – especially if a reasonable ground radial system is used. If one has the real estate available, more than one antenna could be used to form a directional array by proper phasing of the current fed to each antenna. Since the spacing of the antennas would be fixed physically but vary electrically on the different bands, this would mean, however, that the phasing lines between antennas would have to be changed on each band.

The basic conical antenna as shown in Fig. 1 would seem to present some almost impossible constructional aspects on the lower frequency bands if the classic formula dimensions of the antenna were maintained. For instance, for basic 80-20 meter coverage the overall height has to be 32 feet. This dimension is not impossible, of course, but the upper and lower rings of the monopole have to be about 6 and 18 *feet* in diameter, respectively. Constructing an 18 diameter ring of lightweight tubing is

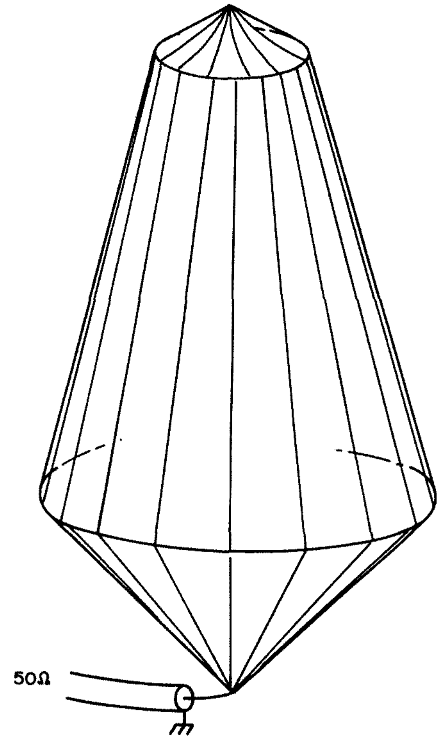

Fig. 1. Basic discone monopole antenna is frequency independent over about a 4:1 frequency range.

hardly a simple matter for the average amateur.

The circular form of the antenna is important if absolutely omnidirectional radiation characteristics are to be achieved. But, only a slight deviation from this characteristic will result if the antenna is made square in shape instead of perfectly circular. The radiation from the corners of the antenna will suffer a bit (perhaps 3-5 dB down), but it should not be difficult for any amateur to orient the antenna with the aid of a great circle map centered on his QTH such that these points fall into areas which are of minor preference. The other advantages of this form of antenna should far outweigh this disadvantage.

A "squared-off" conical monopole for 80-20 meters is shown in skeleton form in Fig. 2. Not every wire is shown for the sake of clarity. The total mast height above the base insulating section is 30 feet and may consist simply of telescoping TV mast sections. The height from ground to the insulating section may be 2-3 feet. The upper square is located about 2 feet from the top of the mast. Each side of this square is 6 feet long. The square can be constructed from metallic tubing, but a better choice is probably PVC plumbing type tubing using the right angle fittings easily available for this type of tubing to form the square. Holes are drilled through the tubing for each wire element and a fixing wire placed around the entry and exit points of each wire to keep the overall square in place. At the top of the mast, each wire element is secured to a ring which metallically connects it to the mast.

At the base of the antenna, four approximately 6 foot tall guy posts are installed spaced 16 feet apart and centered around the central mast. The lower ring of Fig. 1 is simulated by an *insulated* wire ring running

The conical monopole is a vertically polarized antenna that offers extremely broad bandwidth while maintaining a low swr . . .

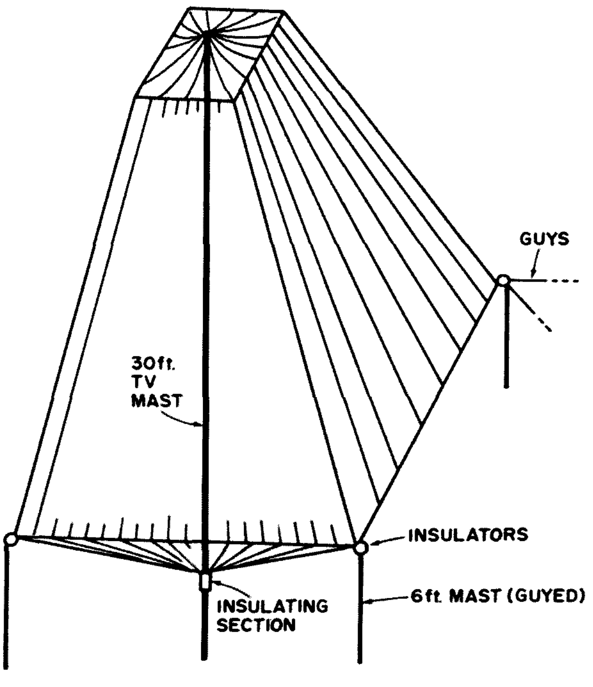

Fig. 2. Squared form of antenna form shown in Fig. 1. Distance between 6 foot masts is 16 feet. Other dimensions are discussed in text.

around between the four guy posts. This wire should be particularly taut, and it may be advisable to guy each guy post in two directions, depending upon the type of soil encountered. Each wire element from the top of the antenna is run through the upper square, then to the lower wire ring (where it is soldered or clamped to the wire ring), and then to a collector ring just above the insulating section on the central mast. The spacing between the wires as they reach the lower wire ring should be about 3 inches. Belden copper-bronze antenna wire is particularly suitable, but any good antenna wire of the copper-bronze or copperweld variety will more than adequately suffice.

The center conductor of the coaxial feed line should be connected to the wire collector ring above the insulating section on the central mast. The shield is connected to the mast support pipe going into the ground. Although this type of antenna is less dependent upon ground radials than the usual type of single element vertical antenna, ground radials will improve its performance. But, again because of its unique design, the antenna does not require ground radials of the usual length as single element quarter-wave vertical antennas. A group of 10-12 radials, each being 16-17 feet long, will suffice for normal operation, although numerous experiments have shown that a greater number of radials will improve the low angle radiation characteristics for DX purposes. Experiments have also shown that ground radial extension in the direction of desired DX performance will considerably improve performance in that direction. For instance, say one does have room to bury 16-17 foot radials all around the antenna but one's particular DX interest is South America. By making the radials pointing in the South American direction as long as possible (34 feet to infinity), considerable improvement in low angle DX radiation in that direction will occur. A rough estimate is that radials one wavelength long in the desired direction result in a 3 dB gain at the low vertical angles useful for DX purposes.

The squared conical monopole is certainly not the overall answer to HF antenna problems, but it does offer reasonably omnidirectional coverage and coverage of the main HF bands usable during the present sunspot cycle. Since the swr to the antenna also remains less than 2:1 over its design range, it also serves as an excellent antenna companion to the various solid state transceivers on the market which have broadband transmitter output circuits (non-tunable). These circuits demand for maximum power output that the antenna transmission line they work into presents a very uniform low swr pattern on each of the bands involved if the "instant" bandswitch advantage of these rigs is to be a realistic operating convenience. ■

Secret Antennas for Cliff Dwellers

J. Craig Caston WA6PXY
5403 Newcastle Avenue #20
Encino CA 91316

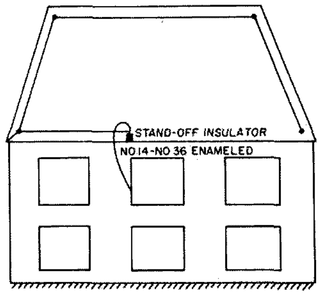

Fig. 1. One way to avoid publicity is shown here. If possible, wire small enough not to be seen, but strung low, will do a good job.

There have been countless articles published about the various antennas that can be adapted for those of us who live in the wonderful world of "urbanville." Whether it has been for convenience or necessity, many amateurs today find themselves living in an apartment, a small city lot, or the popular condominium. Admittedly, this kind of living has its advantages. But one of the greatest disadvantages for radio amateurs, however, is how and where are you going to erect an effective antenna?

After moving from a house into an apartment, I found myself confronted with this problem. I learned, sometimes the hard way, what can and cannot be done. This article will present various configurations involving what I believe is a functional all-band antenna system that anybody can use successfully, which is something that most other articles discussing antennas for urban dwellers seem to ignore.

To start, let's be honest about one always overlooked fact: the utilization of an indoor antenna. Forget it. Unless your dwelling is built of wood, it is a totally futile effort. Modern buildings are made of concrete and steel, all components that love to block rf. You may occasionally hear and work somebody with an indoor antenna, but that kind of situation is truly like working into a dummy load!

Even hanging something outside a convenient window opening will not really suffice, especially if you're looking out to an apartment canyon like I do. Remember, antennas, to work effectively, have to be installed clear and free of nearby objects.

Second, if you are planning to move into a building that requires permission for an outside antenna, and that includes most of us, just ask the manager about the possibility of erecting one. It took me three months to obtain permission to erect a simple vertical, but my persistence paid off. If the building's manager has misgivings over such an arrangement, explain to the person carefully what you plan to do. In fact, a little persuasion on your part might turn into a blessing in disguise.

But even if you are not plagued with space or permission problems, and need just an effective antenna for 80 or 160 meters, then I have the antenna for you. What I am talking about is the end-fed, random length antenna — an antenna that is easy to construct, and yet so effective.

In terms of cost and simplicity, the end-fed is hard to beat. However, the only time anybody sees the end-fed configuration nowadays is usually around the Field Day site.

The limitations of my home brew vertical led me to try the end-fed, random length idea. A single strand of #24 enameled wire was hung out my window, led up the roof, and strung over a pole to the other end of the building, all 200 feet of it. When completed, I had an all-band, end-fed, inverted-vee type random length antenna, minus the transmatch, for $1.29! A real winner in these peculiar times of inflation and recession.

Description

A true end-fed random length antenna can be several wavelengths long.[1] It is not necessary that it be cut to resonate for any frequency; therefore, any convenient length will suffice.

As a rule of thumb, you

should not make the length of the wire shorter than one-half wavelength at the lowest frequency planned to be used. This means that for 80 meters the antenna should be approximately 125 feet long. For 40, 66 feet. However, one source states that an end-fed can be utilized effectively down to one-quarter its lowest frequency and still work well.[2]

This may sound like a contradiction to the random length idea, but in relation to all other frequencies the wire will look, you might say, randomly long.

Installations

Before erecting the end-fed antenna you should first plan the site in which it is to be strung. Doing so will facilitate the actual erection of the antenna, especially if it is to be done in a secretive way. By viewing the roof and designing a mental picture of how you want to place the wire, you can easily rearrange the antenna in your mind, thus avoiding any erection problems later on.

The best method is to have the wire attached to a pole on the roof, the higher the pole the better. But, if for any reason the antenna cannot be strung on the roof, attachment to an adjacent building or down to an open field will do just as well. That's the beauty of the antenna – its versatility.

I've already mentioned that getting at least part of the antenna in the clear is probably the most important consideration. This fact cannot be overemphasized, because the efficiency of the whole system depends upon the antenna's being in the open somewhere along its length. Figs. 1 and 2 give a couple of ideas on how this could be accomplished.

It is suggested that solid enameled wire be used for the antenna element. Enameled wire is cheap, convenient, and it is easy to handle – you just wind it off the roll. Moreover, enameled wire can be strung, if necessary, without the use of insulators because of its protective coating. To avoid unwanted publicity, #34 or #36 wire is a good choice. Your decision on the right size will depend, again, on your own situation.

Widely different wire sizes will have a negligible effect on performance. It has been proven that wire as small as #36 can work well and handle high power levels just as easily as #12 or #14. How far you can go in power on a thin wire antenna, without damaging it, however, will have to be determined experimentally.

Where needed, insulators can be made of anything that insulates. For deceptive purposes clear plastic or plexiglas cut to suit your needs will do. Also small diameter vinyl, fishing line, or plastic tubing is a good choice to consider since it can be tied to support structures easily.

An effective way to lead the antenna up to the roof, if you use that configuration, is with stand-off insulators (see photo). Again, the proper choice and placement of insulators will depend upon your needs.

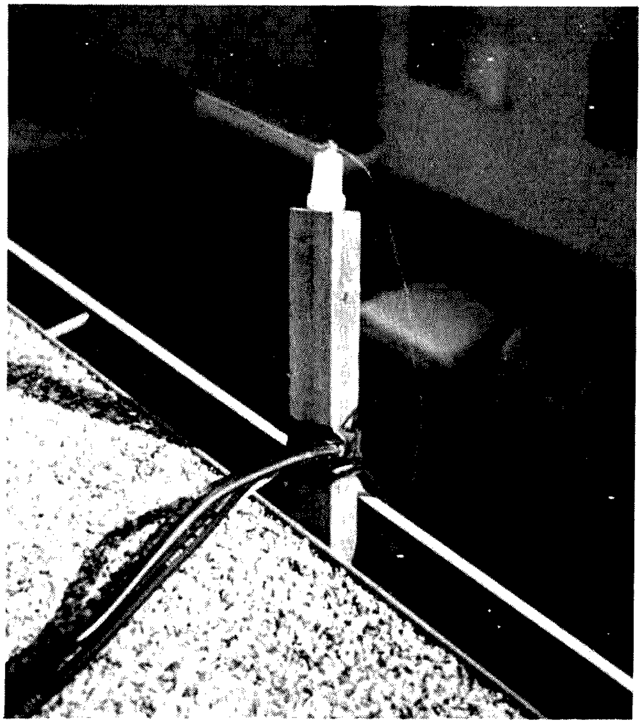

An insulator on top of a piece of wood stuck into the rain gutter is one convenient way to lead the antenna up to the roof.

One of the nice things about the end-fed antenna is that it requires no lead in. One end of the antenna, as the name properly says, is fed the power. However, because different impedances will be presented at the feedpoint of the antenna, depending on which band you operate, a tuner will be required.

Tuner Considerations

As you probably know, a simple coil and capacitor arrangement is all that's needed (Fig. 4). If you want to spend the money, a commercial unit will do nicely. But constructing a tuner yourself can be achieved without too much difficulty or expense. On power levels up to around 200 Watts, a broadcast band variable out of an old receiver and an

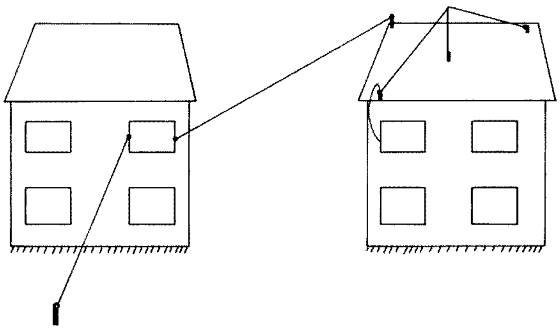

Fig. 2. Here are three ways an end-fed can be used around a building. Note that in all three examples, the wire is reasonably clear of objects somewhere along its length.

inductor of about 30 uH will do the job.

A check into a parts catalog will list a number of coils and capacitors that can fit your own needs. My tuner uses an E. F. Johnson roller inductor #229-203. This coil works beautifully. If you can pick one up, it is suggested you do so. Unfortunately, it has been reported that this inductor is no longer in production. A little searching, however, might produce one at a moderate cost.

C1 is a Johnson type E transmitting capacitor #154-10. It's rated about 350 pF at 3 kV. These components were chosen with the thought of using higher power in the future.

Installation of L1 and C1 into an enclosed chassis is necessary for proper shielding. The photo should give a good idea of component layout and assembly.

As an added bonus, I found that my tuner knocked out all remaining TVI, something that apartment hams are keenly aware of since interferences into just one building's TV system could easily disturb the viewing enjoyment of many people.

Inside the Shack

Because of the tuner, a good ground system is needed. An effective ground will help prevent useless rf currents from flowing around the shack. If a decent ground is not used, the operator will face problems in achieving a minimum swr from his unit. In addition, his equipment will develop a condition of "biting" when he touches it.

Finding a satisfactory ground is a difficult problem for apartment dwellers. This is because the most obvious ground systems may not be readily available, especially if your apartment is several stories above terra firma.

One way to "ground" the tuner is to use a counterpoise or artificial ground. This is a wire one-quarter wave long of whatever band you use placed conveniently around the shack. The only drawback to this idea, however, is that to be effective at least one wire must be installed for each band. I have one counterpoise in use now. It's cut for 40 meters even though I frequent 80 as well. Therefore, it's possible that you might be able to get by using just one counterpoise for two bands.

Another way to help eliminate stray rf currents is to try to terminate the antenna wire at a current loop. This involves using a length or antenna cut for your favorite band at least one-quarter wave long or multiples thereof.[3] This minimizes the amount of rf introduced into the shack. Doing this is not imperative, but it might aid in stopping a hot rig.

If you can connect the tuner with a short piece of wire to some grounded water pipes or something of similar nature, then you're in good shape. In addition to the counterpoise, I have a wire running from the shack and connected to the pipes in my bathroom shower. Quite surprisingly, this eliminated most of my ground problems.

Those wishing additional information can find an excellent article on tuners in the December, 1974 *QST* by DJ2LR/W2[4], or consult *The Radio Amateur's Handbook*.

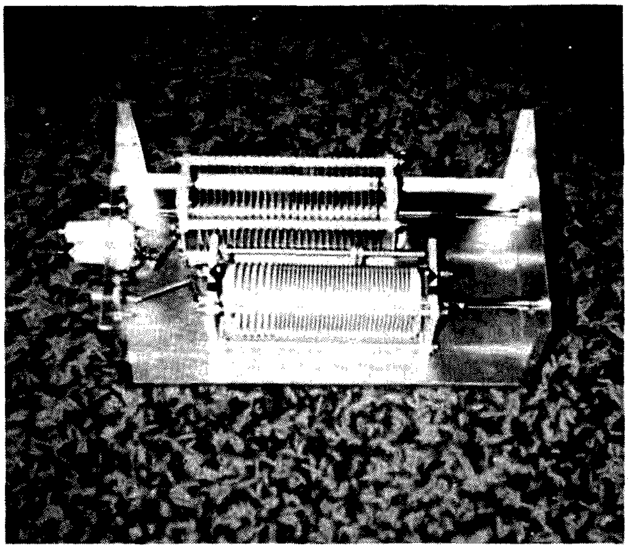

A look at the home brew transmatch. Note the standoff insulators, and the placement of L1 and C1 in the spacious chassis.

Conclusion

The performance of the end-fed system at my QTH has been very gratifying. DX on 40 and 80 meters has been easier to hear, while signal reports with only 200 Watts of power have been excellent from stateside stations.

It's hoped this primer will guide the amateur in making the right decisions involving the end-fed concept which fit his own individual and unique situation, while at the same time giving the amateur plagued with space and permission problems a chance to enjoy his or her hobby with a minimum of difficulty. ■

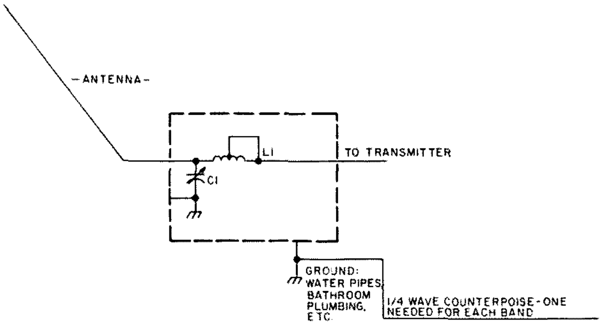

Fig. 3. C1 — 350 pF single gang variable capacitor; L1 — 20-30 uH inductor (E. F. Johnson #229-203 roller inductor suggested).

References

[1] *The ARRL Antenna Book,* 13th Edition, ARRL, Newington CT, 1974, p. 178.

[2] *Ibid.,* p. 178.

[3] *Ibid.,* p. 179.

[4] Ulrich L. Rohde, "Some Ideas on Antenna Couplers," *QST,* December, 1974, pp. 48-52.

The Novice Inverted Vee

Jerrold A. Swank W8HXR
657 Willabar Drive
Washington Courthouse OH 43160

One of the most popular antennas is the so-called "inverted V," which is actually a dipole with the legs drooping at approximately a 45° angle on each side of a single support. The single support is the secret of its appeal, because almost everyone can find something to support this type of antenna, as in Fig. 1, where it is supported on a TV mast pulled up with a pulley. This way it can easily be lowered for tuning. However, even if not on a pulley, it's quite an easy antenna to tune, because the legs are so close to the ground.

The ideal inverted V antenna would have the included angle (a) 90°, and the legs in the same plane as the tower. It would be a little better if the top was supported about 3' away from the metal tower, to keep the tower out of the field of the antenna. See Fig. 3.

However, the antenna will work well — even in the most unusual configurations. See Fig. 2. For example, my available yard for antennas is 74' x 70', which is no way close to the ideal required space for an 80 meter V. I have two towers, 48 feet apart. Figs. 4 and 5 show the slope and separation of my antennas.

These antennas have an important amount of vertical polarization, as when angle "a" is less than 90°, the vertical polarization predominates, and when it is greater than 90° the horizontal polarization predominates. Thus the antennas are good DX antennas — better than a horizontal dipole. They do, however, show many characteristics of the horizontal dipole, being less subject to man-made noise and more to high angle radiation than the vertical. For example, when I am transmitting to K1GZL in Berlin, N.H., he says my signal is about 20 dB better from the inverted V than the vertical, but my vertical is about 3 S-units better in the Antarctic than the inverted V. When I am talking to W5VSR in New Orleans the situation varies. Some nights I am better on the V, and some nights on the vertical, and some nights I will fade out on one and come in strong on the other.

Although I am using baluns on both, there might be some advantage to not using baluns, since I am in the northern part of the country. An inverted V without a balun tends to be directional toward the side of the antenna with the shield of the coax connected. Thus the pattern without a balun tends to be skewed to one side. Whether this is an advantage or disadvantage depends on where you are and what you want. I am of the opinion that the balun is unnecessary for general use, provided that your antenna is resonant at about the frequency you work, and that the coax lead-in is a multiple of a half wave at that frequency.

Since I am using baluns, I am also using separate feed lines to the 40 and 80 meter antennas. Without baluns you can easily feed both from the same feed line, and just parallel them, thus saving quite a bit in these days of high costs (by not using two baluns and perhaps a hundred feet less of coax).

When you tune up an inverted V you will find that

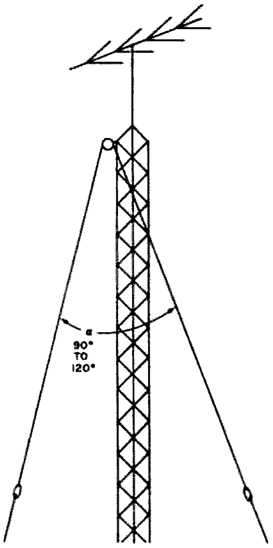

Fig. 1.

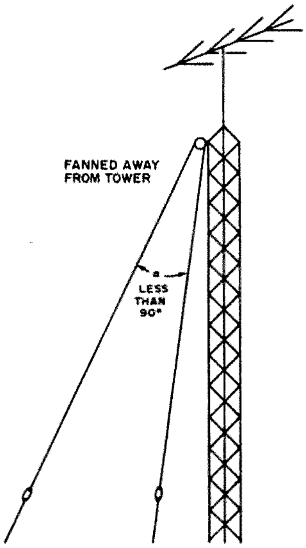

Fig. 2.

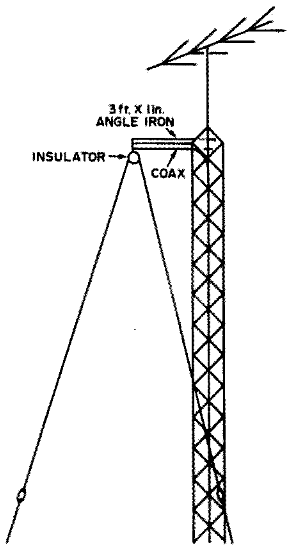

Fig. 3.

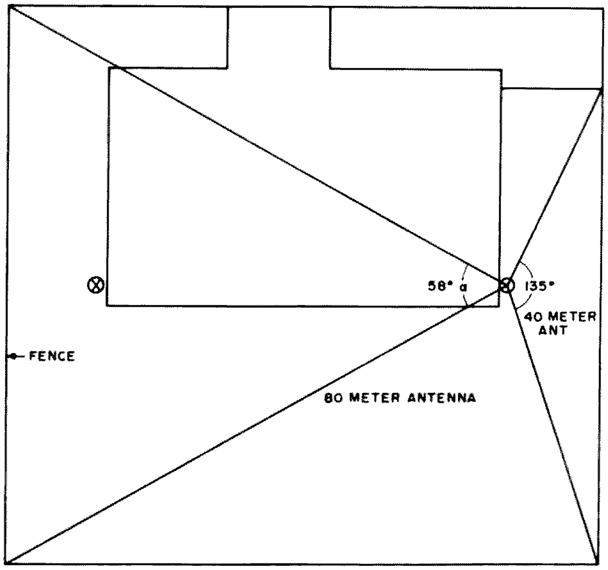

PLAN VIEW

Fig. 4.

it is very easy to tune and very easy to understand. It is best to cut it a little long, perhaps as much as two feet. When you measure it with an swr bridge it may look like it will never tune, but start taking off about six inches at a time and measure the bottom of the range you want. When it starts to go down toward 1:1 measure about 100 kHz on each side of the desired frequency, and find where the center of the range is. Don't worry if it will not go lower than 2:1 – just find the center. When you have it centered, then start to close or open the angle at the bottom, and raise and lower the legs a little. This will improve the swr, and if you have enough room you can get it right down to 1:1. At this point you will find it quite broad tuning, and probably it will cover the whole range you want with swr less than 1:1.5.

Of course, if you have to, you can pull up an inverted V into a tree, or on the side of your house, or on a piece of masting attached with TV hardware to a soil pipe or chimney.

I think that every ham should have both a vertical and an inverted V or dipole. The signals often swing greatly from one to the other. I had a ham in the Antarctic tell me one night that he had two receivers tuned to me, one on a vertically polarized antenna and the other on a horizontally polarized antenna. He put one on each side of the room so that he was seated between them and he said it was beautiful. The signal would fade from one to the other and he never missed a word.

I have given you the figures for the Novice bands, although my antennas are tuned several inches shorter for where I work.

The regular dipole at the center has an impedance of about 72 Ohms, so it is better suited to RG11 or RG59. However, the downward slope of the legs on an inverted V makes it an excellent match for RG8 or RG58.

Incidentally, at Novice powers don't waste your money on RG8. RG58 is quite adequate. The power rating of RG58 at 30 MHz is 430 Watts, and the loss of 100 feet of RG58 at 7 MHz is just one dB greater than RG8. That means you would barely be able to tell the difference. At 3.7 MHz it would be even less.

Incidentally, remember that you can use the 40 meter inverted V on 15 meters, and the 80 meter inverted V on 10 meters, so you can have an all band Novice antenna with a single feed line.

Also, if you have to put up a push-up mast or pole you can use the two inverted V antennas as guy lines. ■

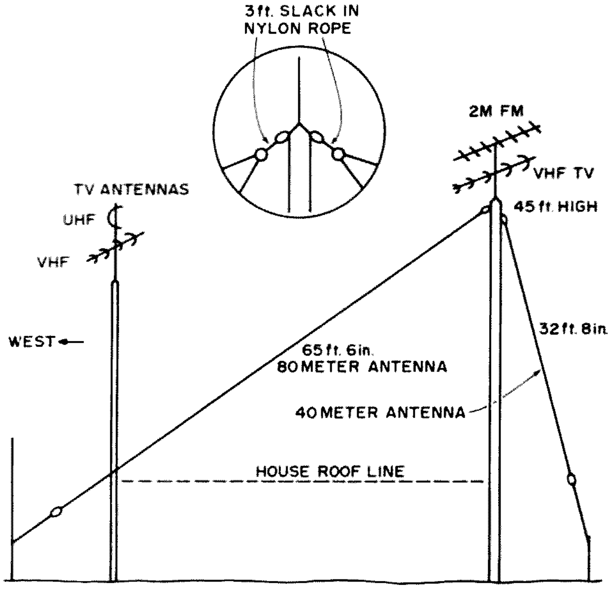

ELEVATION

Fig. 5.

Gene Hinkle WA5KPG
I/O Engineering
9503 Gambels Quail
Austin TX 78758

Closed Loop Antenna Tuning

Tuning Yagi-Uda beams and quads can be a very time-consuming task, requiring many man-hours to perform. Usually several helpers are needed to make adjustments and to take field strength measurements. I have developed a technique which requires only one person to successfully tune an antenna with the aid of a couple of pieces of equipment. The method developed uses an rf source in the far-field and the station receiver as a sensitive field strength measuring device. A circuit is connected from the receiver to a speaker, which, in turn, can modulate a small 100 mW transmitter. The receiver for the 100 mW transmitter is carried by the person making adjustments on the antenna. Thus, a closed loop feedback system is used to permit optimum adjustment of the antenna. As a bonus, the far-field signal source can be used to make pattern measurements as the antenna is rotated, the receiver monitoring relative field strength. Fig. 1 shows a block diagram of the system.

Circuit Details

The far-field signal source is a small, low power oscillator (Fig. 2). Transistor Q_1 is used in a Pierce fundamental mode oscillator. A diode full wave rectifier is used as a frequency doubler. A small Amidon iron powder toroid is used to develop the push/pull signal needed for full wave rectification. Transistor Q_2 acts as an amplifier for the doubled frequency. Another transformer, T_2, steps the output impedance down to a low value. The crystal is chosen such that the harmonics will fall within the amateur bands. I used a 7060 kHz crystal which permits field strength measurements at 14,120, 21,180, and 28,240 kHz. The output signal is rich in the 2nd, 3rd and 4th harmonics and produces a strong source for the 20, 15 and 10 meter bands. The oscillator is powered by 2 six volt batteries connected in series to produce 12 volts. Since the current drain is low the batteries will last a long time. Two wires about 5 feet long are connected as an antenna to the output of the amplifier. Ideally, the far-field source should be at the same height as the station antenna, but useful results will be obtained by mounting the transmitter/antenna on the top of a tall ladder leaning next to a roof. The transmitter should be at least 5 wavelengths away for meaningful results.

The unit that connects to the receiver is a voltage-to-frequency converter. The voltage developed across the meter is used to vary the frequency of an audio oscillator. The maximum voltage developed across the meter can either be measured with a sensitive voltmeter or be computed. For the Heath SB-102, the internal resistance is 100 Ohms, and the full scale reading is 1 mA. Thus, the full scale voltage across the meter is:

$$V_{MAX} = I_{F.S.} \times R_M = 1.00 \text{ mA} \times 100 \text{ Ohms} = 100 \text{ mV}$$

The 100 mV signal is amplified by a 741 operational amplifier as shown in Fig. 3. The gain of the amplifier is 40 dB. Thus the S-meter full scale voltage of 100 mV would become 10 volts at the output of the amplifier. This voltage is used to drive the modulation input on the 555 free-tuning oscillator. The 555 oscillator oscillates at a frequency determined by the resistor/capacitor combination connected across it. The frequency of oscillation is given by the equation:

$$F = \frac{1.44}{(R_A + 2R_B)C}$$

For the values given, the free running frequency is roughly 1 kHz. As the 741 amplifier drives a current into the 555, however, this frequency is a little lower than 1 kHz and becomes greater as the drive current is reduced. Thus, the effect is to hear a higher frequency for a lower S-meter reading, and a lower frequency as the S-meter reading becomes stronger. The 555 drives an 8 Ohm speaker. The 470 Ohm series resistor is used to limit the current to a

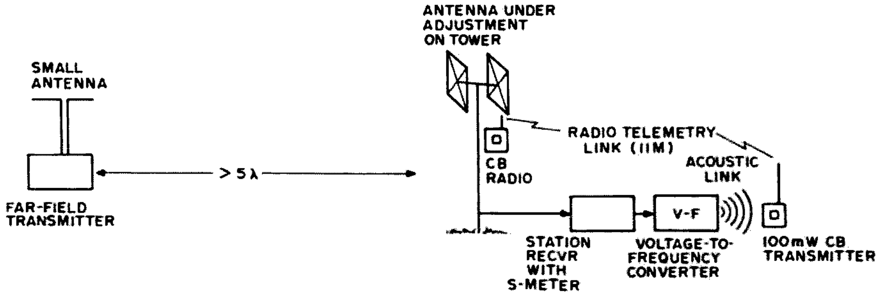

Fig. 1. Closed loop antenna adjustment block diagram. If CB radios are not available, a two wire speaker cable could be run up the tower for monitoring. Far-field transmitter is a milliwatt transmitter with harmonics falling inside the 20, 15 and 10 meter bands.

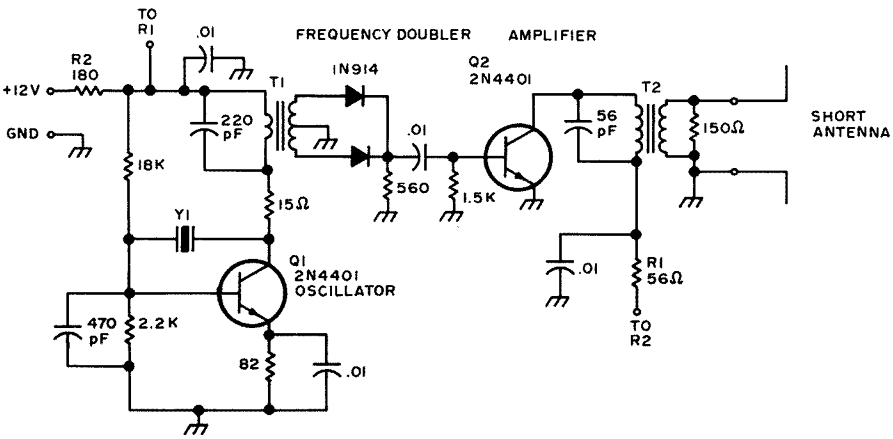

Fig. 2. Schematic of the milliwatt transmitter for the far-field source. Y_1: 7.00-7.115 MHz; harmonics fall within 20m, 15m and 10m bands; T_1: Amidon Core T50-2, primary 22 turns #28, secondary 20 turns #28, center-tapped; T_2: Amidon Core T50-2, primary 22 turns #28, secondary 5 turns #28.

safe value, and yet still permit a loud tone to be heard.

The tone from the speaker is monitored as an indication of relative field strength level. In the prototype, a 100 mW citizen's band walkie-talkie was used as a telemetry link between the receiver and the antenna on top of a tower. The walkie-talkie was taped "on," and the speaker was acoustically coupled to the unit. The walkie-talkie is a very good and inexpensive wireless telemetry link. Both units were bought for less than $10 several years ago, and similar units are still available. Since the distance between the walkie-talkies is not far, the antennas on the units can be retracted somewhat to limit their range. If it is not possible to find any walkie-talkies, then a two wire system can be rigged to permit hearing the speaker at the antenna tuning site. The wireless approach is better because there are no wires to get tangled in, and the volume of the sound can be adjusted on site.

When coupling the voltage-to-frequency converter to the receiver, a battery or isolated supply should be used to power it. This is because the S-meter circuit may be at a high potential above ground, and the return ground on the voltage-to-frequency will also be at this high potential. This high potential is called a common mode voltage. The 741 amplifier will not function if its common mode voltage is too great. If a common ground between the converter and the receiver is not used, the 741 operational amplifier will only detect the differential voltage across the S-meter and it will not respond to the common mode voltage.

Operation

The voltage-to-frequency converter should be connected across the S-meter. As a signal is tuned in, the tone from the 555 oscillator will change pitch. The far-field source should then be placed several wavelengths away and tuned in with the receiver connected to the antenna. If the front-to-back ratio is to be optimized, then the adjustment of the antenna should be done to minimize the S-meter reading while the antenna is pointed away from the far-field source. On a quad, for instance, the reflector stub should be varied until the receiver reaches a minimum signal strength. The tone from the 555 oscillator should be monitored for the highest possible pitch. The human ear can detect fairly small changes in pitch if a continuous tone is heard at all times. For front gain optimization, the beam would be pointed towards the source and the pitch from the telemetry link would be lowered as much as possible, indicating maximum frontal gain.

Once the adjustments are made, the far-field source makes an ideal reference to make relative field strength measurements with. If a calibrated output signal generator can be found, then a matched S-meter reading can be taken between the antenna and the generator output. By plotting the relative output level from the generator vs. bearing, a polar plot of field strength can be taken. The S-meter is used solely as a matching device, matching the antenna output to the calibrated generator output. It is surprising how uncalibrated S-meters are in terms of real S units to absolute units (an S unit is defined as a 6 dB change in signal strength). For signals which barely deflect the S-meter, sides of beams for instance, an audio meter may be used to match the generator's output to the antenna's output.

For antennas such as quads it is gratifying to know that optimum adjustments can be made without a number of people needed. Since the quad is fairly easy to reach from a tower, it is very convenient to be able to make final adjustments while the antenna is in place. I hope this method will create interest in different approaches to solving an old problem — how to tune an antenna. ■

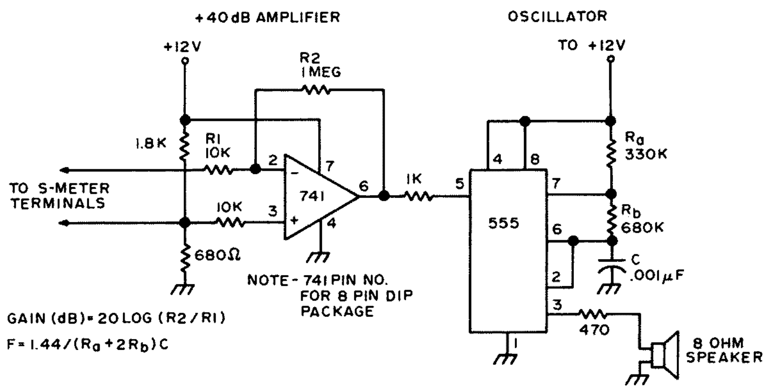

Fig. 3. Schematic of the voltage-to-frequency converter. A 100 mV input signal will cause a maximum frequency change at the output of the 555 astable oscillator.

Edwin T. Karl K2VGD
63 Cranberry Street
Central Islip NY 11722

The 75-80m Broadbander

Some time ago, I operated with an all band multi-element dipole antenna. The antenna worked quite well (for a dipole antenna) but generally left me in the bottom of pileups on 20 and 15 meters. This eventually led me to a more competitive antenna for the higher frequencies. The multi-band dipole became redundant (and worse yet, tended to distort the quad's pattern).

However, I wanted to increase the bandwidth of the 80 meter dipole, as my operation generally is evenly divided between CW and SSB operation. After some thought, the elements of the dipole for 15 and 10 were removed, and an attempt was made to extend the 20 meter element to a length suitable for 75 meter operation. Reason told me that if you could combine dipoles for 20 and 40, etc., why not 80 and 75?

Due to space limitations in the K2VGD estate, the 80 meter antenna was folded into a "Z" shape, to fit a plot 75' wide. The apex of the antenna system was at 30 feet and the ends were attached to 4 television-type aluminum masts, fastened to the fence. In attaching the 75 meter antenna, I ran the elements backwards across the two masts, thus overlapping the last 20 feet of each element. As one element was insulated, no problems with shorting were anticipated. The antenna is fed with a random length of RG-8/U and a W2AU balun.

In testing the design, the lowest swr was expected at 3550 and 3900 (the design length of the antennas). Much to my surprise the antenna exhibited high swr below 3650, but less than 1.5 to 1 between 3650 and 4000 kHz, with no peaks or dips within this portion of the band. After several days of experimentation, the length of the CW section approached the length necessary for operation at 3400, with the 75 meter antenna cut for 3900. The swr plot is included in Fig. 1.

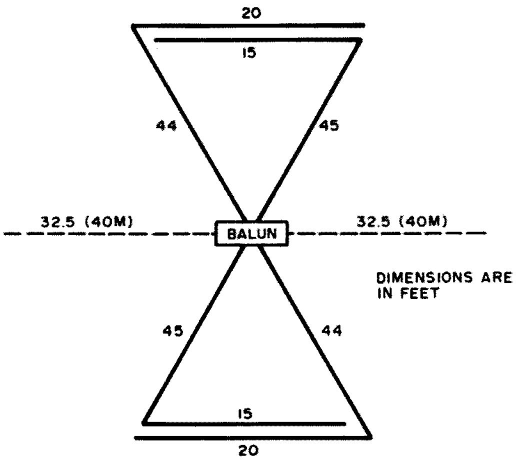

Fig. 1. Vertical view with swr plot.

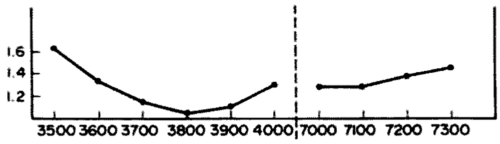

While I make no pretense of having the exact technical explanation of the results, it would appear that the ends of the antenna, in overlapping, inductively and capacitively couple the two elements to one another in such a way as to cancel the reactance that would be present at the feedpoint. Element lengths do not appear to follow theory exactly, which in all probability is due to the fact that the ends are ten feet off the ground, and the apex is but 30 feet high, far from the ideal ¼ wave height. However, there has been no evidence of very high take-off angles, as no difficulty is encountered working either with the West Coast, Europe or even as far away as New Zealand on 75 (5x8 in ZL-land with 900 W PEP).

The 40 meter dipole does not appear to be affected by the 80 meter elements. If anything, it seems to have broader than normal characteristics.

No attempt is made to convince others that "this is THE antenna" for 80 meters, but rather, with the declining propagation on the higher bands, to encourage experimentation by others in limited space, broadband systems. Most of these types of antennas use wire elements, and thus are relatively inexpensive. ■

SSG Cortland E. Richmond W1CEJ
48th Transportation Company
APO NY 09454

The Magic of a Matchmaker

It isn't necessary to settle for an inefficient antenna because you don't have the space to put up a beam or a good high dipole. Even if you don't have the time to put up an antenna farm before it's time to move, or if the landlord frowns on antennas in the yard, you can still put out a good signal. The key is the use of an antenna tuner. A tuner will allow you to use almost any length of wire, and if you plan ahead a bit, you might even get some gain.

I've used an antenna tuner before, with an end-fed one wavelength Zepp on 80, so when I needed an all band antenna that I could put up in the trees, the solution was obvious. Unfortunately, someone had relieved me of the Johnson Matchbox that had served me so well. It was necessary to build a tuner.

The unit that I eventually built was the product of a little thought and a lot of scrounging. I didn't have any of the major parts needed, so I had to rely on my friends' junk boxes. Vern WB4BER came up with a high voltage capacitor, and Lloyd WA4HYT furnished a toroidal tank coil. Armed with these parts, I decided that this was one project that would look decent enough to put next to the rig, so I bought a wooden cabinet from Radio Shack ($2.00 on the "junk" table).

The special characteristics of toroids are well known. The one that interested me at this point was size. I had just bought a used FPM-300, and, if I could make a small enough tuner, maybe I could put together a suitcase-sized station. The cabinet for the tuner was in fact just the right size to fit in the suitcase.

The circuit I would use had already been determined by the parts on hand: an "L" match and variations. With this in mind, I built a haywired matcher to test the idea. I didn't know if the toroid was suitable for high frequency use and had to find out before I got the whole project finished. Feeding a 14 meter wire, results were satisfactory, and I was able to match 300, 600 and 2000 Ohm loads on the five HF amateur bands.

I replaced the original front panel on the cabinet with a piece of sheet aluminum and mounted the coil on it. The coil is actually 18 turns of #12 wire wound on two T-250 cores, with two lucite end spacers, and is probably much larger than is needed for 150 Watts of rf. I mounted the coil to a 12 position tap switch so that the switch and coil would make a compact assembly, and put the switch right of center on the panel. The capacitor, which is a 240 pF Hammarlund unit, was mounted on a piece of fiberglass on the side of the cabinet, so that both the rotor and stator were isolated from ground. Input and output connections were placed on the back panel.

Again, operating results were good. However, when I tried to feed the antenna through coax, I was unable to get a match on any band. The cure for this was to increase the matching circuit variations available. This was done by wiring in a 3 pole 5 throw ceramic switch. This was originally a 4 pole unit, but between 10:30 and 11:00 pm I broke one of the wafers, and it took a little thought to come up with the circuit changes necessary. Incidentally, besides being ceramic, the switches have silicone

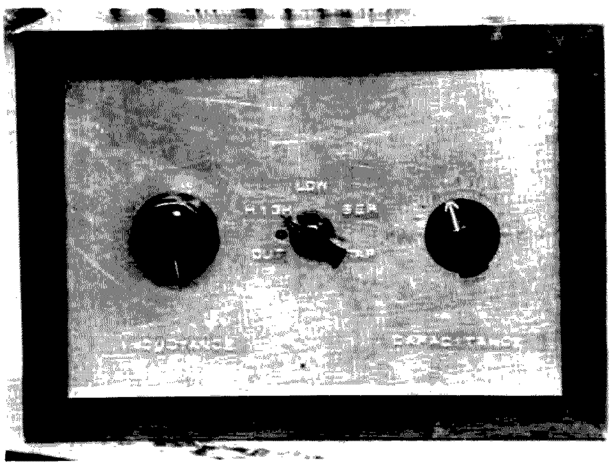

Front view of the Matchmaker, showing controls.

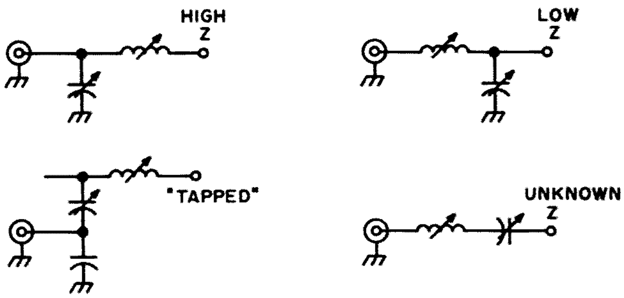

Fig. 1. The four different circuits used in the Matchmaker.

The rig ready to travel in its suitcase.

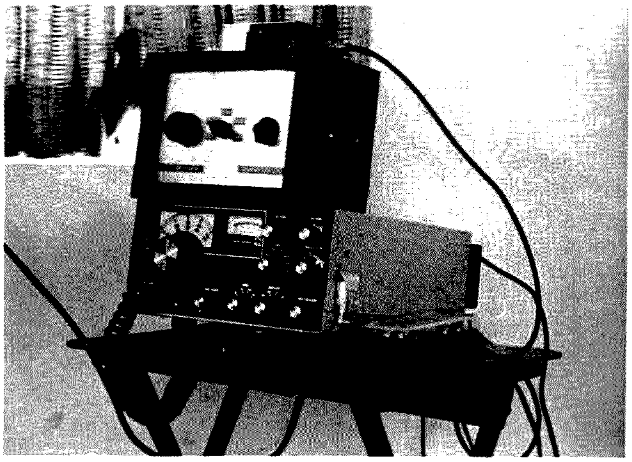

The rig set up in San Diego and on the air.

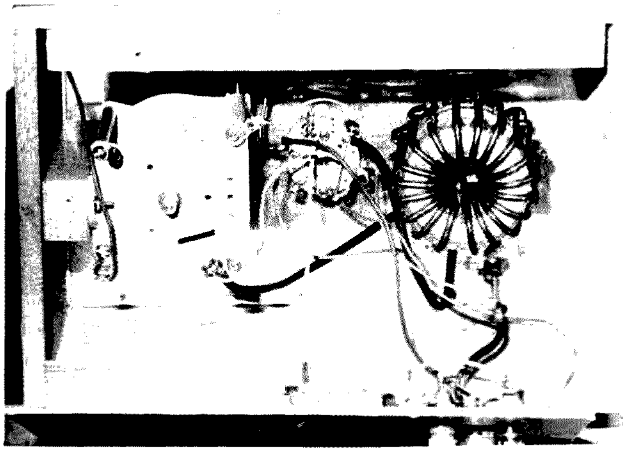

Inside of the Matchmaker. Note the fiberglass insulator under C1.

rubber compound placed at points where there might be arcing to ground.

The final circuit has four configurations and a bypass position. It will match high impedances, low impedances, work as a series tuned circuit, and as what I call a tapped circuit. Fig. 1 shows the individual circuits available, while Fig. 2 shows the complete unit. Note the amount of wiring on S-2, the function switch. This is the heart of the matcher, and it is a lot easier to build if the switch is wired prior to being put into the cabinet.

The cabinet is about 250x175x140 mm (7x9x5½ inches), and is made from compressed material with an imitation wood grain surface. The front panel is grounded to the coax sockets to prevent hand effects. Obviously this cabinet offers no shielding, and a search with a wavemeter around the operating unit shows strong rf fields around the coil and switch S-2. Even so, when feeding antennas through coax, when the coax is grounded at the far end, there have been no problems with rf on the equipment.

Operating the Matchmaker is somewhat different from using the Matchbox. I use an external swr indicator, which is inserted between the rig and the tuner. Peak the exciter, dip the final, and adjust first the inductance (switch S-1), then the capacitance for minimum reflected power. It may be necessary to re-dip the final, as the tuner has some effect on PA tuning. Continue adjusting the tuner for minimum reflected power until satisfied. In some configurations there will be a nice dip in swr, but it will be accompanied by an equal dip in forward power! This is easy to detect, and means that the wrong circuit is being used. Just set S-2 to a different configuration and try again. If in doubt, the series circuit will always get some kind of a match, while the "tapped" position will match whatever the others won't.

An "L" match circuit works best into a high impedance load. To get this it's necessary to use a wire about 35 to 40 meters long for all band operation. I have used a 19 meter wire, but matching was difficult.

Feeding this type of an antenna is problematical. If a single wire feed is used you'll have rf all over the shack. So I use coax. While this sounds like some kind of heresy, it works. In fact, a couple of recent articles have pointed out the advantages of feeding with coax. If RG-8 is used, then the loss in any reasonable length will be insignificant. Even RG-58 can be used for short lengths. Of course I'm talking about 100 or 200 Watts of rf, not a full gallon (if you want to melt coax, that's your business).

The photographs show the completed tuner, inside and out, and details of the coil and switch S-2, as well as the traveling setup in and out of the suitcase.

Air travelers: Be prepared for some delay if you carry the rig aboard the plane. The ladies who work the fluoroscopes almost faint when they x-ray a ham radio set! ■

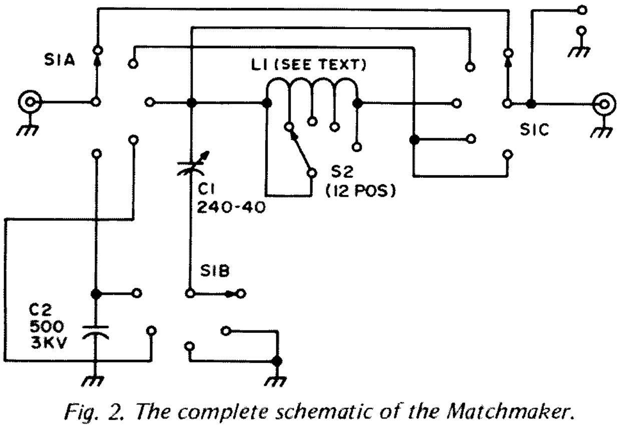

Fig. 2. The complete schematic of the Matchmaker.

Alfred F. Stahler W6AGX
5521 Big Oak Dr.
San Jose CA 95129

How to Coax Your Antenna

Modern amateur transmitters are designed for a 50 Ohm unbalanced feedline. The classic basic dipole antenna wants to be fed with a 73 Ohm, balanced feedline. The object of this article is to describe the design of an antenna and feedline that simultaneously satisfy the requirements of the transmitter and the antenna.

Reducing the radiation resistance of the antenna from 73 to 50 Ohms only requires a reduction in antenna length. The literature[1,2,3] on antenna theory is in good agreement and predicts a half length from 0.207λ to 0.231λ, depending upon antenna diameter and end conditions. A length of

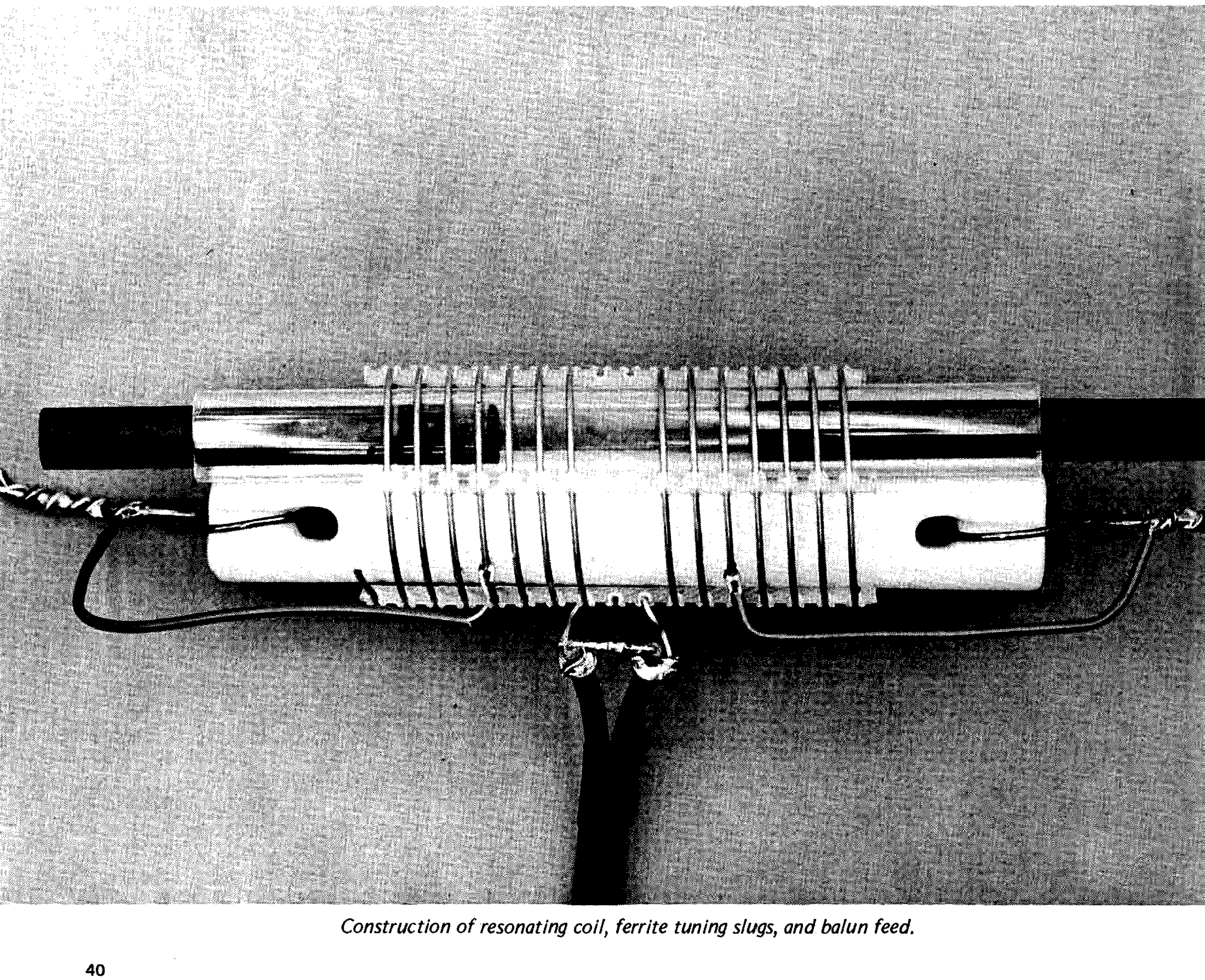

Construction of resonating coil, ferrite tuning slugs, and balun feed.

0.210λ is recommended to yield a shorter antenna and a radiation resistance of not more than 50 Ohms.

Reducing the antenna length also moves the antenna away from resonance and introduces a capacitive reactance in series with the radiation resistance. In order to restore resonance in the shortened antenna, an inductive reactance equal to the antenna's capacitive reactance must be added in series with the antenna. This resonating inductance is sometimes called a "loading coil." The literature shows that the capacitive reactance is very sensitive to changes in ratio of antenna diameter to wavelength. For a 0.210λ antenna, the capacitive reactance ranges from 34 to 230 Ohms, with 120 Ohms representing an average wire antenna.

Fig. 1 shows a configuration of the proposed antenna: radiating elements cut to approximately 0.210λ, two symmetrical variable inductors and a balanced 50 Ohm feedline.

Cutting the antenna to length is easy, but obtaining the variable inductors takes some care. The photo shows my approach to this problem. The inductor is made from B&W coil No. 3029 with two turns removed in the center. The coil is slipped over a Johnson No. 136-107 antenna insulator. A piece of plastic tubing, 0.75" OD x 0.50" ID x 7", is also squeezed inside the coil to support the two tuning slugs. These slugs, Amidon 12.5 x 100 mm ferrite rods, are used to tune the inductors to resonate the antenna. The range of tuning is large, from 2.0 to 3.75 μH for each coil. The coil is tapped to place the antenna resonance within the tuning range of the slugs. The coil and slug combination, as shown in the photo, can be used to resonate an antenna with a half length of 0.210λ for the 80 through 10 meter bands. If the two turns had been left in the center of the coil, it would also cover 160 meters.

Tuning of the antenna is done at this stage, prior to installation of the feedline, by coupling a grid dip meter to the antenna through a small one turn loop soldered across the feed points. With the antenna as high as possible, adjust the two

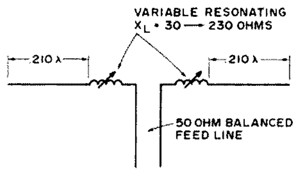

Fig. 1. The shortened, 50 Ohm impedance, resonant dipole.

ferrite slugs *equally* to resonance. To measure resonance of the antenna in its final position, couple the grid dip meter and its one turn coil to the antenna feed point by means of an open wire line. This line *must* be electrically ½λ exactly, or multiples thereof, as measured with the grid dip meter; 300 Ohm twin lead is fine for this measurement. The resulting high standing wave ratio does not affect the measurement of resonance.

Now that the antenna has been designed, built and resonated, the next task is matching its balanced 50 Ohm impedance to the unbalanced 50 Ohm impedance of the transmitter. A device to do this is known as a "balun," a contraction for balanced-to-unbalanced. The amateur literature has numerous references for the design and construction of transformer-type baluns. These balun transformers have very large bandwidths and are particularly effective when used as interstage couplers. However, they are *not* effective for antenna applications unless the coax shield connection of the transformer is at true rf ground potential, such as the one described by Sevick[4]. Imagine an antenna with a transformer-type balun located at its feed point. This point is high in the air, and far from rf ground. If the antenna is ever so slightly unbalanced, this will be reflected across the transformer to the coaxial feedline and cause antenna currents to flow on the outside of the shield; this current results in radiation, which couples to the antenna increasing the unbalance, which increases the feedline radiation, etc., etc. Unfortunately, this antenna feedline interaction is not self-stabilizing towards the balanced configuration; if it

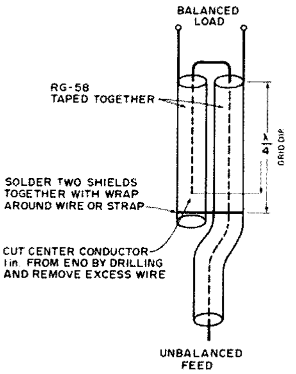

Fig. 2. Schematic representation of 1:1 antenna balun.

were, there would be no need for a balun.

The proposed balun design was first described by Roberts[5] in 1957, but has not been presented in amateur publications. Fig. 2 shows a schematic representation of the balun; some of the details are visible in the photo. From the antenna's viewpoint, it is being fed by two equal conductors in a balanced feedline configuration; from the transmitter's side, it looks like an unbalanced 50 Ohm load, the transition taking place over ¼λ length of the balun. Note that this balun is ground independent and that radiation interaction between the feedline and the antenna elements is prevented by the equal and opposite current flowing in the two outer shield feedlines. The line from the balun to the transmitter will be electrically flat and can be any length. The reader can use reference 5 for the theory, construction details, and measured performance of this balun.

This article has described the design of a dipole antenna and balun that matches an unbalanced 50 Ohm line. The design procedure is valid for parasitic arrays as well as the simple dipole. The performance of the antenna-balun combination has been found to be very good, and it behaves very close to theory. I will not describe performance by means of the conventional swr vs. frequency plot because without very detailed and accurate descriptions of the test antenna (length of feedline, loss characteristics of feedline, conductivity and diameter of antenna, harmonic content of test signal, accuracy of swr meter, etc.) these curves have little value.

The builders of this antenna and/or its balun will enjoy:

- quick and easy tuning to resonance
- low swr at resonance
- minimum feedline radiation
- improved radiation patterns (F to B, gain, and direction)
- reduced harmonic radiation
- ground independence ■

References

1. R. King, C. W. Harrison, "The Impedance of Short, Long and Capacitively Loaded Antennas with a Critical Discussion of the Antenna Problem," *Journal of Applied Physics,* Vol. 5, 1944.
2. Jasik, Henry, *Antenna Engineering Handbook,* McGraw-Hill, 1961.
3. Shelkunoff, Sergi, *Antennas; Theory and Practice,* Wiley, 1952.
4. Sevick, Jerry, "The W2FMI 20 Meter Vertical Beam," *QST*, June 1972.
5. Roberts, Willmar, "A New Wideband Balun," *Proc. I.R.E.,* Dec. 1957, pp 1628-1631.

John Skubick K8ANG
1040 Meadowbrook
Warren OH 44484

40m DXing -- City Style

Until recently, I thought that vertical antennas approached the ideal for forty meter DX contacts, in terms of signal strength and reasonably low costs. This judgment was based upon the usual city lot antennas, combined with a typical ham's budget. The experiments of Dave WA8TNO proved otherwise. Let me first briefly describe these.

Dave's property consists of two and one half acres. The surrounding land is flat, almost treeless, only a few well-spaced houses. His verticals consisted of two well-matched, quarter wave elements made from aluminum downspouting. Both elements were spaced one half wavelength apart for forty meters, with 180 degree (broadside) phasing. Each vertical element had 120 quarter wave insulated radials lying on the ground and equally spaced around. The earth in this part of northeastern Ohio is "usually moist," and consists of a loam and clay mixture. I believe that these are fairly good conditions for a land-based vertical system. It worked very well.

The single triangle element consisted of small gauge wire, with a total length of about one wavelength. The apex was supported at the 55 ft. level on an existing metal tower. Both lower corners went to ground stakes, and the bottom side was about 12 ft. high over the earth. This was fed directly, without a balun, with coax. The triangle's broadside "pointed" in the same directions as that of the vertical broadside array.

This hastily-erected triangle element had much lower noise pickup, and gave stronger signal reports most of the time. Working Asia and Australia became a regular routine. In a word, the triangle was superior.

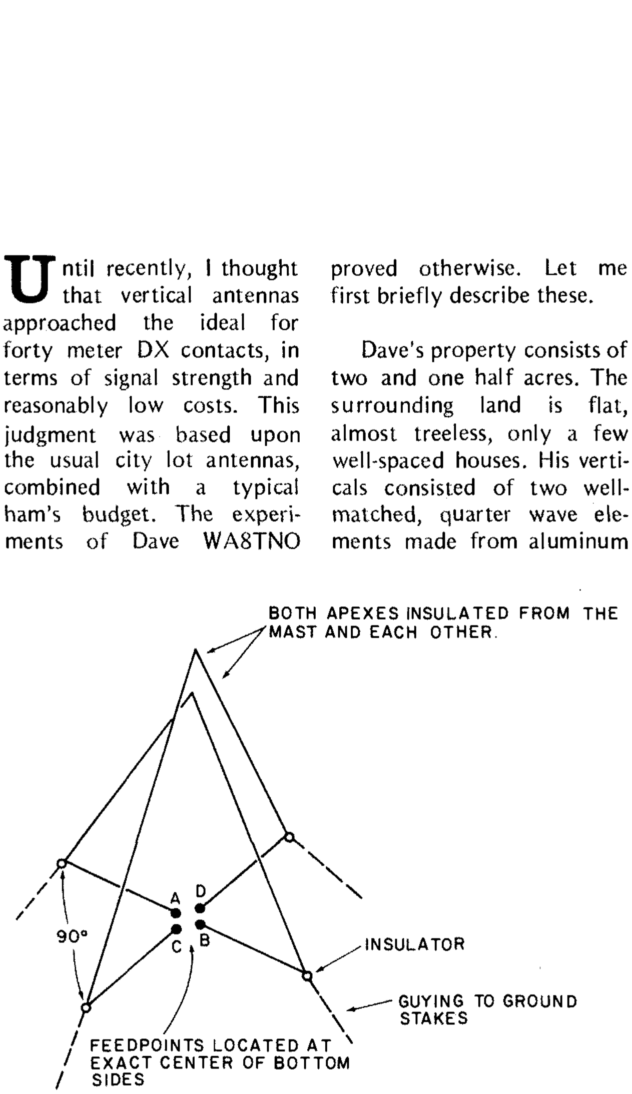

Fig. 1. 40m DX triangle antenna system. Each side = 45.5 ft. Total length of each triangle is subject to trimming for low swr at 7.100 MHz. Elements are #12 copper wire.

City Lot DX Version

Naturally, this old vertical lover wanted to try this on a 50 ft. wide city lot, virtually surrounded by power and phone lines, high trees and aluminum-sided houses in all directions. I ended up with Figs. 1 and 2, after the conclusion of my own testing that used my (then) existing half wave vertical for a comparison.

I wanted some control over switching directions and nulls. My switching scheme in Fig. 2 is not original, but it works well. I used a Kurman[3] double-pole, double-throw rf relay with a 12 V dc coil. Surplus rf relays are fine if you can find them. The .01 uF ceramic capacitor across the relay coil is for stray rf protection. The relay is mounted in a black plastic "electronics" box from Radio Shack, and bracketed to the mast *above* the feedpoint. All

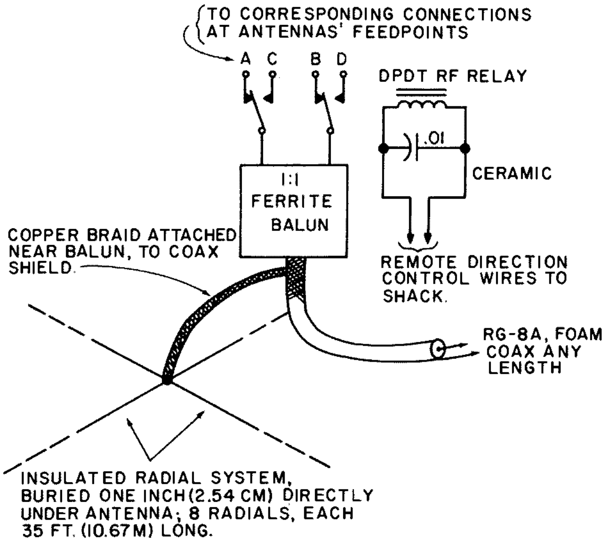

Fig. 2. Direction switching and feed systems.

connecting and control leads are routed through the box's bottom to keep out rain. Try to keep the two sections of feeder between the antennas and relay contacts reasonably short. Most important, make sure these same short sections are the same lengths and spacings to keep the swr constant.

The radials are not an absolute necessity. This antenna system worked well without them. However, *with* the radials the DX stations seem to be stronger more often. The 1:1 ferrite balun broadened the response, with very low swr out to the band edges.

I used #12 gauge enameled hard-drawn "antenna" wire for the antenna elements to help keep down the overall rf losses. Radiation resistance will do you more good than ohmic resistance!

Suggested apex supports can be an existing tower or tree. I used a 50 ft. telescoping TV mast. The actual extended height is 48 ft., with the insulated apexes attached near the top. Bottom height is 8 ft.

Results

DXing from a city lot on 40 meters has finally become a real pleasure for me. Much of it has been easily worked. Getting through pileups is normal when running against the ordinary antennas encountered on this band. Perhaps the most pleasing aspect is getting comparable or sometimes better signal reports than some of the fellows using beams! My rig is solely an FT-101 with no high power attachments.

Conclusion

City lot dwellers, let's take down those ordinary urban antennas, and quit being "trapped" in our thinking. Now is the time to put up a *real* antenna. You too can have a respectable 40 meter signal, as well as some of our country cousins — and with a lot less grass to mow than they have! ■

References

1. E. Noll W3FQJ, *73 Vertical, Beam and Triangle Antennas,* Editors and Engineers, Ltd., New Augusta, Indiana, pp. 126-144.
2. E. Noll W3FQJ, "Circuits and Techniques," *Ham Radio,* August 1971, page 56.
3. Kurman Instruments Corp. DPDT, 12 volts dc coil, rf relay, model 252C. Lafayette Radio Electronics Corp., 111 Jericho Turnpike, Syosset NY 11791. Stock no. 30-22183; $7.95 plus 8 ounces postage.

73 Magazine *Staff*

The Secret 2m Mobile Antenna

It may be difficult to accept, but there are many amateurs who are not interested in repeater operation. But, almost all amateurs recognize the unique communications capability that 2 meter repeater usage can provide, especially in the case of some emergency while mobile. This article describes a matching/isolation network that will allow one to use a regular auto antenna on 2 meters without interfering with the normal operation of the auto's AM or AM/FM radio. No relays or other type of switching is involved. One can leave the network connected to a 2 meter transceiver installed in the car or just bring it out to a BNC jack installed in the car. Then when a portable transceiver is used in the car, it can be plugged into the antenna system.

The performance of an auto antenna along with the matching/isolation network will normally not equal that of a rooftop ¼λ whip or similar antenna. But, no holes have to be drilled, extra antenna mounted, etc. The losses involved will vary from situation to situation, but should be low enough so adequate communication can be achieved over a local repeater with a few Watts of output power.

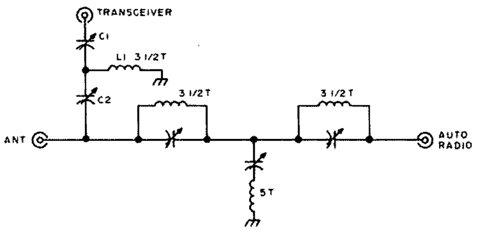

Fig. 1. Matching/isolation network. All capacitors are 27 pF trimmers. Coils are approximately ¼" diam., ½" long, of #16 or #18 wire with turns as indicated.

What is needed in a matching/isolation device is a matching network between the transmitter and antenna which will match impedances and also simultaneously act as a high-pass filter. Also, what is needed between the antenna and the auto radio is a filter to attenuate 2 meter energy only from getting into the radio. Both these functions are accomplished by the circuit of Fig. 1. The T network of C1, C2 and L1 performs matching and acts as a high-pass filter. The rest of the components act as a rejection filter tuned to the 2 meter transmitting frequency. They can be viewed as individual tuned circuits – 2 parallel resonant and one series resonant.

The entire network should be placed in a shielded enclosure and as close to the base of the auto antenna as possible. But, it will also work if placed at the end of the auto radio's transmission line (at the auto radio's antenna input jack), but with greater losses, of course. Wherever it is placed, however, the auto antenna's extended length and the length of transmission line used to reach the antenna should remain unchanged after the network is tuned. Auto antenna lengths which produce low base feed point impedances are best, such as ¼λ (20¼") or 5/8λ (50½"), but other lengths can be used. A length greater than 50½" should not be used since high angle radiation will increase sharply.

One can either crudely tune the network up and let it go (if communication can be established) or attempt to tune it up for overall minimum losses. In any case, a bench check should first be made with a grid-dip meter. Short all the input/output points. Then resonate the C1, C2, L1 circuit (by coupling to L1) for resonance about 2 MHz below the transmitting frequency. After installing the network in its operating location, re-adjust C1 and C2 for maximum field strength reading.

If you want to tune up the whole network more properly, an swr meter has to be inserted in the transmission line to the auto antenna. Leave the output terminal to the auto receiver connected. Adjust C1, C2 and L1, if necessary, for the lowest swr. With an odd length of transmission line, it might even be necessary to add some inductance in series with C2 for lowest swr. Then connect the swr meter in the line to the auto receiver and, using only the "forward" or "set" reading, adjust the trap trimmers for a minimum reading. One then has to go back and forth several times with the swr meter in each line to compensate for the detuning effect of each adjustment on the network.

When carefully adjusted, one can *simultaneously* use the auto antenna for 2 meter communication and AM or FM reception. ■

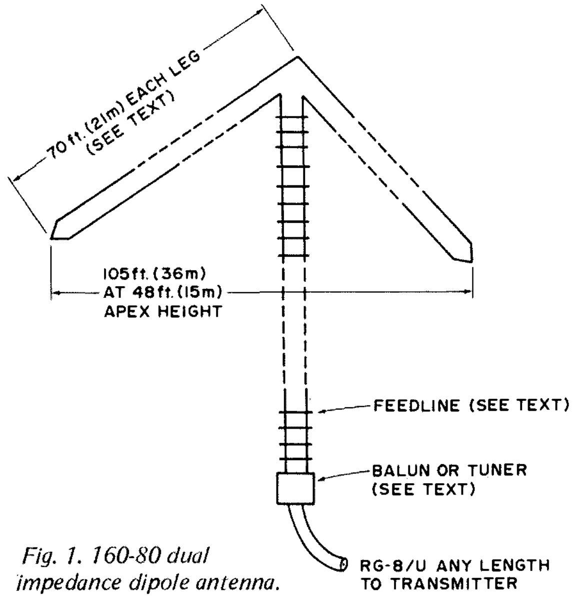

Fig. 1. 160-80 dual impedance dipole antenna.

An Inverted Vee for 160/80m

John Skubick K8ANG
1040 Meadowbrook
Warren OH 44484

City lots and bank accounts have something in common for many of us. Both tend to be small! Here is a cheap antenna system that covers both 80 and 160 meters, but is the size of an 80 meter "inverted V," with *no* ground radials. If your city or suburban lot is typical, you'll barely have room for one 160 meter radial, let alone several!

On 80 it is an inverted, folded dipole. The feedpoint impedance is less than 300 Ohms because of the inverted shape. For 160 it becomes a half wave inverted dipole, with the ends folded back toward the middle, and "end fed." The feedpoint impedance now becomes very high. The flat top portion can be constructed from transmitting twinlead, TV twinlead, or 300 or 450 Ohm TV open wire. You can even make it out of ordinary "antenna wire" if the parallel wires are spaced up to 6 inches. The length is approximately 70 feet for *each leg.* More on leg length later.

Since both bands utilize the same feedpoint, we must have a simple and effective feeder system for both bands/impedances as follows:

Without a Tuner

Two baluns are required at the shack end of the feed line. A 4:1 for 80, and a 1:1 for 160. I used two Amidon[1], "$5.00 balun kits." I put two layers of plastic electrical tape over each core for better "arc-over" protection. Both baluns were easily wound within 30 minutes, per enclosed instructions. Use 36 inches of wire for each winding, leaving about two inches extra for lead connections. I put each balun into a 34¢ plastic, screw-lid, freezer container, with a coax socket attached. All possible openings were then generously sealed with a tube of G.E. Silicone Seal, sold by blister-pack in most hardware stores. Amidon's spec sheet states, "80-6 meter operation." However, these baluns seem to work just fine on 160 as well!

Use RG-8 between the balun(s) and the transmitter. The feed line between the balun(s) and antenna should be "300 Ohms" type such as twinlead, or better yet 300 Ohm, TV, open wire "ladderline" for higher power handling. The dimensions for the balun-to-antenna feed line are 110 feet for solid dielectric twinleads or 130 feet for the open wire line.

Initial tuneup begins with 80 (or 75) meters, for your favorite section of the band, by trimming the ends of the flat top equally, a couple of inches at a time, for minimum swr (measured at the transmitter). A neat "trick" is to trim it for "75 phone," then hang clip-on single wire outriggers for "80 CW." Minimum swr will be about 1.5:1, using the 4:1 balun. Since the antenna is inverted and close to ground, the feeder is "seeing" less then 300 Ohms from the folded dipole.

Next is the 160 meter tuneup. Change over to the 1:1 balun. Now, trim the twinlead (or open wire) feed line for minimum swr in your favorite portion of 160. You can get this down to 1:1. That's it for "tunerless" operation.

With a Tuner (Antenna Coupler)

It's easy for you tuner lovers. From my experiments, it appears that the leg length can vary between 60 to 70 feet with no reduction in performance, for either band. Your coupler will "tune" this antenna and feeder system over the entire 160 and 80 meter (and 75) bands.

You have a wider choice of feed lines also. You can use TV and transmitting twinleads, 300 and 450 Ohm TV open wire "ladderlines," or even home brew openwire line. The length of balanced feed line, between the antenna and your coupler, may load easier if it is about 90 to 120 feet for the solid dielectric types, or 120 to 140 feet for the open wire types.

For the antenna coupler tuneup, first preset your transmitter's "tuning and loading" controls, by loading it directly into a 50 Ohm dummy load. (You *do* have a dummy load, don't you?) Now, switch the transmitter into the coupler. Do not touch the transmitter's "tuning and loading" con-

trols, because they are now preset for 50 Ohms. Do your tuning and loading with the coupler, which will transform whatever impedance and reactance is appearing at the "shack end" of the feed line into 50 Ohms for your transmitter. If you are a tuner fancier, and have read this far, chances are you already have a coupler for 80 meters and the higher bands. Fig. 2 shows a compatible type of coupler for 160.

Antenna Supports

I used a 50 foot, 5 section, telescoping TV mast to support the apex. Actual extended height is 48 feet. The mast is hinged at the base, by driving two 3 foot x 2 inch pipes into the ground about 3 inches apart. I drilled a hole into each pipe, so that a suitable large bolt could be passed through both pipes and the existing hole at the base of the mast.

The antenna supports the mast in the east-west direction. Two lengths of non-metallic clothesline also support the mast from the top, but in the north-south direction. No center guys were used.

The insulator ends of the antenna, and the ends of the clothesline, are attached to 5 foot x 1½ inch pipes driven 3 feet into the ground.

The entire assembly isn't too heavy. It couldn't be, if skinny, stringbean-physiqued K8ANG has to lift it up and walk it into the vertical position!

A tree and a halyard can also be pressed into service for the center support. My trees are never properly located.

Results

It certainly gets the rf out of my backyard! On 80, the performance is exactly that of a "regular" ½ wave inverted dipole, using the same height, center

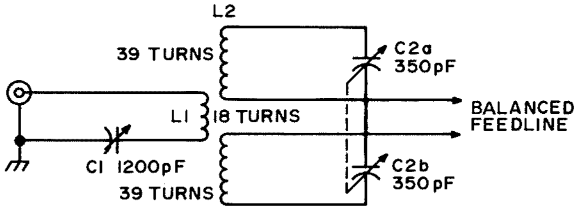

Fig. 2. 160m antenna coupler. L1-L2: Illumnitronic 2410 or Polycoils 1780, 10T/inch, 3 inch diam. C1: Three section "broadcast" type, all sections paralleled. C2: 200 pF per section may be used with 100 pF in parallel. Note: Do not ground any portion of L2 or C2 – leave them "floating" above ground on insulators.

supported. It also seems to be more broadbanded. On 160 I have worked coast-to-coast, and Canada easily, using a barefoot Japanese transceiver. I cannot compare it to a full size inverted dipole on 160, because this would be twice the size of my backyard!

Conclusion

There have been many 160 and 80 meter antenna articles written these past few years. Not all of them will fit everyone's backyard or performance specifications. Maybe this one will help to "fill the void" in your city lot antenna farm. ■

References

1. Amidon Associates, 12033 Otsego Street, North Hollywood CA 91607.
2. Bonadio W2WLR, "Antenna Tuner for Optimum Power Transfer," *Ham Radio,* May 1970, p. 28.
3. Greenberg W2EEJ, "The Forty Meter Folded Dipole and Other Bands," *Antenna Roundup,* 1965, Cowan Publishing Corp., p. 89.
4. *ARRL Antenna Book,* 1968, pp. 206-207.
5. Orr W6SAI, *S-9 Signals,* Radio Publications, Inc., p. 44.

Robert J. Wright PY8ZAC/W8VOH
Caixa Postal 181
66000 Belém, Pará, Brazil

The Dipole Dangler

About ten years ago, the Summer Institute of Linguistics (SIL) here in Brazil was granted permission to use radios for communication between our centers and remote Indian villages. SIL is working here and in other countries with people who speak some of the more than 2000 unwritten languages of the world. Our purpose is to learn these languages, analyze them, teach the people to read and write their own language, and translate the New Testament for them. Here in Brazil, the linguistic-translation teams live in the Indian villages for periods of from about three to six months at a time, taking a radio with them each time to maintain contact with one of our five centers. We are using the Stoner SSB-20A radio, an excellent portable with about 15 Watts PEP output, powered by any 12 volt source including dry cells. The antennas are dipoles about 86 feet long. Communications distances range from about 100 miles to over 500 miles.

Because of the importance of the radio communications and because the equipment has to be set up and taken down each time by non-technical personnel, one area of potential problems was the antenna system. The antennas had to be reliable, rugged, and easily handled. Because more than 40 stations were involved, they also had to be inexpensive and made from readily available materials. The purpose of this article is to share some of our experience with you with the hope that some of the ideas might prove useful to you for your home station antennas, or for portable antennas for field day use, etc.

The construction of the center insulator is a very important factor in building a reliable dipole antenna. Purchasing a commercial unit was not practical for us because of cost and also the delay in obtaining it. The center insulator we have been using consists of a standard porcelain insulator to which is attached a piece of ¼ inch plastic in the form of a cross.

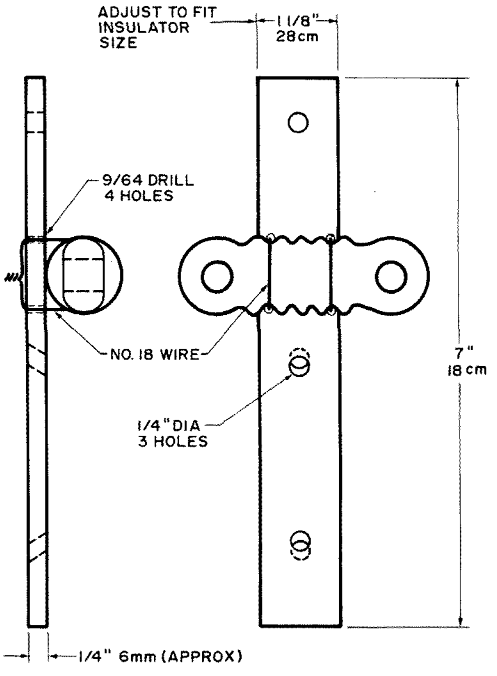

Fig. 1. Center insulator.

See Fig. 1. The porcelain insulator provides the necessary strength, and the plastic gives support to the coax cable. The plastic is attached to the insulator with No. 18 solid copper wire, wrapped twice around the insulator and twisted together in back of the plastic. Three holes are drilled in the plastic to support the coax cable.

We have been using flexible, bare-copper antenna wire, and this has proved very adequate. To attach the wire to the center insulator, pass the wire through the hole twice and wrap the end around snugly for a distance of at least three inches. Attach both legs to the center insulator and attach the end insulators in the same way. Do not solder anything at this time. Before going any further, wrap the antenna legs on wooden forms as described below. This makes a neat package to take into the shop to attach the coax cable.

Cut the coax cable to length, unless you want to wait and install the antenna first. Pass the end of the cable through the holes in the plastic, starting from the back as shown in Fig. 2. Remove about 12 inches of the plastic jacket. Remove the center conductor from the braid by pulling it through the braid. Do not comb out the braid.

Use standard vinyl tape cut to about 3/8 inch in width to seal the point where the center conductor leaves the braid. Seal this junction very carefully. After the antenna is completed, we also seal this further with Q-dope or epoxy cement to make it as watertight as possible.

Pass each of the conductors (center conductor and braid) through one of the holes in the center insulator, drawing the braid side tighter than the other so that it will take the strain. Pass the braid through a second time and wrap it over the antenna wire,

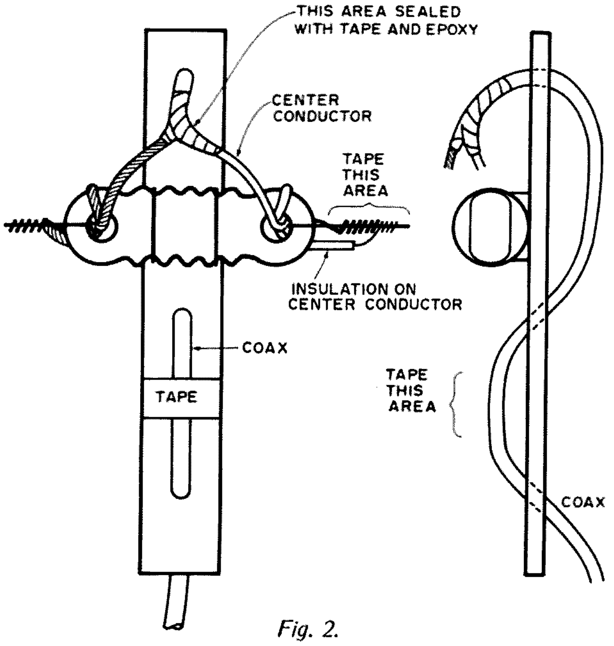

Fig. 2.

in the same direction as the original wrapping. Solder the braid to the wire in the middle of the wrapping, leaving the rest free to flex.

Pass the center conductor through the hole a second time and lay it alongside the wrapping on the antenna wire. Mark a half way point on the wrapping and strip the insulation to this point only. I have found it very easy to strip the insulation from coax by scoring the insulation with wire strippers every ¼ inch or so and then crushing the insulation with long nose pliers to break the adhesion between it and the wire. After this, the insulation comes off relatively easily. Once the wire is stripped, wrap it around the antenna wire a few turns. Do not tin the wire if it is stranded. Solder the center conductor to the antenna wire, making sure that the antenna can be pulled straight without straining the coax inner conductor. Solder only where the conductor attaches to the antenna wire. Reinforce the entire connection by wrapping vinyl tape securely around both the inner conductor and the antenna wire, starting from the center insulator and extending past the solder joint. This is very important because it secures the center conductor to the antenna leg, allowing a minimum of independent movement and reducing the threat of breakage at what is probably the most fragile part of the whole antenna. Tape the coax cable to the plastic support between the lower two holes.

At this point, seal the "V" in the coax with epoxy cement or other sealer and let it dry. Install the coax plug and the antenna is ready for use.

After the antenna is constructed, care in handling is very important to long life (for the antenna). Many of you know the frustrating tangle that you can have with a long dipole antenna that has been coiled up and then uncoiled improperly. To avoid this, we are using wooden forms made from ¼ inch plywood cut to approximately 5 by 7 inches. Each leg of the antenna is carefully wound on one of these forms to avoid tangling. To use the form, extend the antenna out full length on the ground and carefully check it for kinks. Starting at the end of one leg, carefully wind the antenna on the form by *winding the form onto the wire* while walking toward the center insulator. Do not coil the wire onto the form. Use one form for each leg. When you get ready to re-install the antenna, carefully unwind the wooden forms, leaving the antenna fully extended on the ground. Do not pull the wire from the forms or you will have a kinky mess. Carefully check for kinks or other problems before installing the antenna.

Multiple frequency antennas can be made using a modified center insulator as shown in Fig. 3. Spacers for separating the antenna legs can be made from 3/8 inch plastic electrical conduit, or the second antenna can be in the form of an inverted V. In this case, the antenna will need to be five per cent longer than a normal dipole.

Using this method of construction and using the wooden forms for handling the antennas, we have had a minimum number of problems with our antennas during these past years. ■

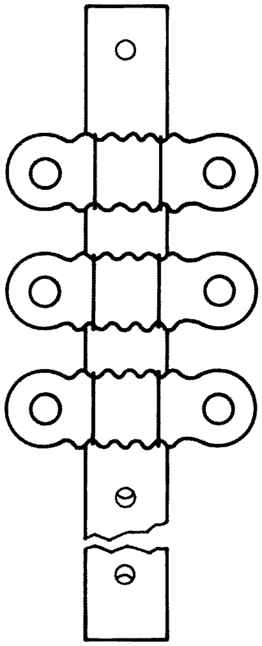

Fig. 3. Center insulator for multiple frequency dipole.

Ralph E. Taggart WB8DQT
4515 Oakwood Drive
Okemos MI 48864

Amateur Weather Satellite Reception

One of the euphemisms that is often used to describe the times in which we live is the "space age." The gradual buildup of technology that enables mankind to travel and work in space and to visit other worlds has resulted in a whole new age of exploration as we gradually learn more about the larger universe in which we live. Probably no aspect of the space program has a greater effect on our lives than the tremendous strides in weather satellite technology. To many, such satellites are merely the "eyes in the sky" that serve to amplify the weather map on late night news, but they are far more important than that. They have contributed to new standards in weather forecasting and provide an early warning system that has saved uncounted lives and dollars by providing advanced warning of destructive tropical storms such as typhoons, cyclones, and hurricanes. Mapping of snow and ice cover is still another spin-off from this useful program. At the time this article is being written there are seven operational U.S. weather satellites in orbit around our planet continuously scanning the ever-changing weather patterns that affect our lives.

It is now a decade since Wendel Anderson K2RNF first showed how it was possible to receive and display pictures from such satellites (2) and with today's technology the job is far easier than it was just ten years ago. With far less financial outlay than that required for even a modest sideband station it is possible for amateurs to receive and display pictures from most of the operational satellites, while for someone who is really hung up on the subject none of them is out of reach. The purpose of this article will be to describe the status of the various satellite systems now in use and to provide numerous references for the construction of home satellite receiving stations. Such stations can provide daily glimpses of the world from space which few of us would ever see and are an interesting entry into the world of meteorology. The low cost of such ground stations make them attractive to small educational institutions where they can provide practical data for courses in weather and the earth and planetary sciences as well as providing worthwhile class projects in electronics.

There is certainly no "one way" to put together a satellite station – there are a multitude of options, each varying in terms of cost, operating ease, and system flexibility. I will discuss the various requirements for satellite ground stations and provide references from the widely scattered literature on the subject so that you can do some background reading on the kind of system you might like to set up. Some of the options are essentially jury-rigged affairs of casual interest but others can, at low cost, provide performance comparable to commercial or government installations. Ever since entering the weather satellite game amateurs have distinguished themselves by continually developing better ways to accomplish various tasks, usually far exceeding professionals in terms of the cost-quality equation. Amateurs, with their knowledge of electronic and communications systems, are often among the first to spot problems with operating satellite systems and thus provide a valuable service in monitoring these satellites. Weather satellite technology represents a very concrete example of how "amateurs" can make a significant contribution to space age technology. Why not give it serious thought – you are certain to have lots of fun and may

	APT Mode	SR Mode
Subcarrier Frequency	2400 Hz	2400 Hz
Subcarrier Amplitude:		
White	Maximum	Maximum
Black	Minimum	Minimum
Line Rate	240/minute	48/minute (present) 120/minute (future)
Frame Time	200 seconds	Continuous
Lines Per Picture	800	Depends on length of pass
Video Bandwidth	1600 kHz	450 Hz (IR) 900 Hz (visible)

Table 1. Characteristics of the video format of the APT and SR modes.

Name	Frequency (MHz)	Period	Inclination	Mode	Products
ESSA 8	137.62	114.7 min	101.5°	APT	Daylight real-time cloud cover pictures
NOAA 3	137.5 (primary) 137.62 (test)	116. min	102°	SR	Visible and infrared cloud cover pictures in daylight, IR cloud cover pictures at night
NOAA 4	Same as NOAA 3	115.0 min	101.7°	SR	Same as NOAA 3

Table 2. Polar orbiting weather satellites.

make some major contributions at the same time!

Satellite Picture Modes. The two video modes of greatest interest to amateurs are highlighted in Table 1. Both modes utilize a 2400 Hz audio subcarrier to transmit the video information. Subcarrier amplitude varies from maximum for white picture areas to minimum (approximately 4% of maximum amplitude) for black picture areas. Subcarrier amplitudes between these two extremes represent varying shades of gray. The two modes differ however in the line rate and picture organization. The first, the APT mode (APT is an acronym for *A*utomatic *P*icture *T*ransmission), transmits video lines at the rate of 240 per minute or 4 lines per second. A single picture or "frame" requires 200 seconds for transmission, resulting in an 800 line picture. The baseband video bandwidth of the system is 1600 kHz, so if audio filters are used to help remove noise from the satellite signal they should be centered on 2400 Hz with a 1600 Hz bandwidth. Narrower filters will result in progressive loss of picture detail. The 800 line APT picture is far sharper and has much greater resolution than a typical TV picture display.

The second mode – the SR or *S*canning *R*adiometer mode – is based on the use of a mechanical scanning system on board the spacecraft. As the satellite moves along its orbital track a mirror scans the earth beneath in a narrow beam at right angles to the satellite's orbital track. Present SR systems use a 48 line per minute scanner. The SR system is capable of providing both visible light and infrared (IR) images of the earth below. The IR data occupies the first half of the scanning line with the visible data inserted from a tape loop during the second half of the line when the satellite scanner is scanning up against the spacecraft. The SR data format can be considered as a 48 line per minute system with half the line being IR data and the other half visible data, or it can be treated as a 96 line per minute system of alternating IR and visible data lines. Display systems can be designed around either option. The SR picture is not broken up into discrete frames as it is in the APT mode – instead transmission of picture data is continuous as long as the spacecraft is in range with the vertical "scanning" provided by the movement of the spacecraft along its orbital track. Present systems utilize a 48 line per minute scanner but in 1978 a new SR system utilizing a 120 rpm scanner will be inaugurated. The principles of operation are identical to the 48 line system except that the pictures will be several times better in resolution. Various display systems for 48

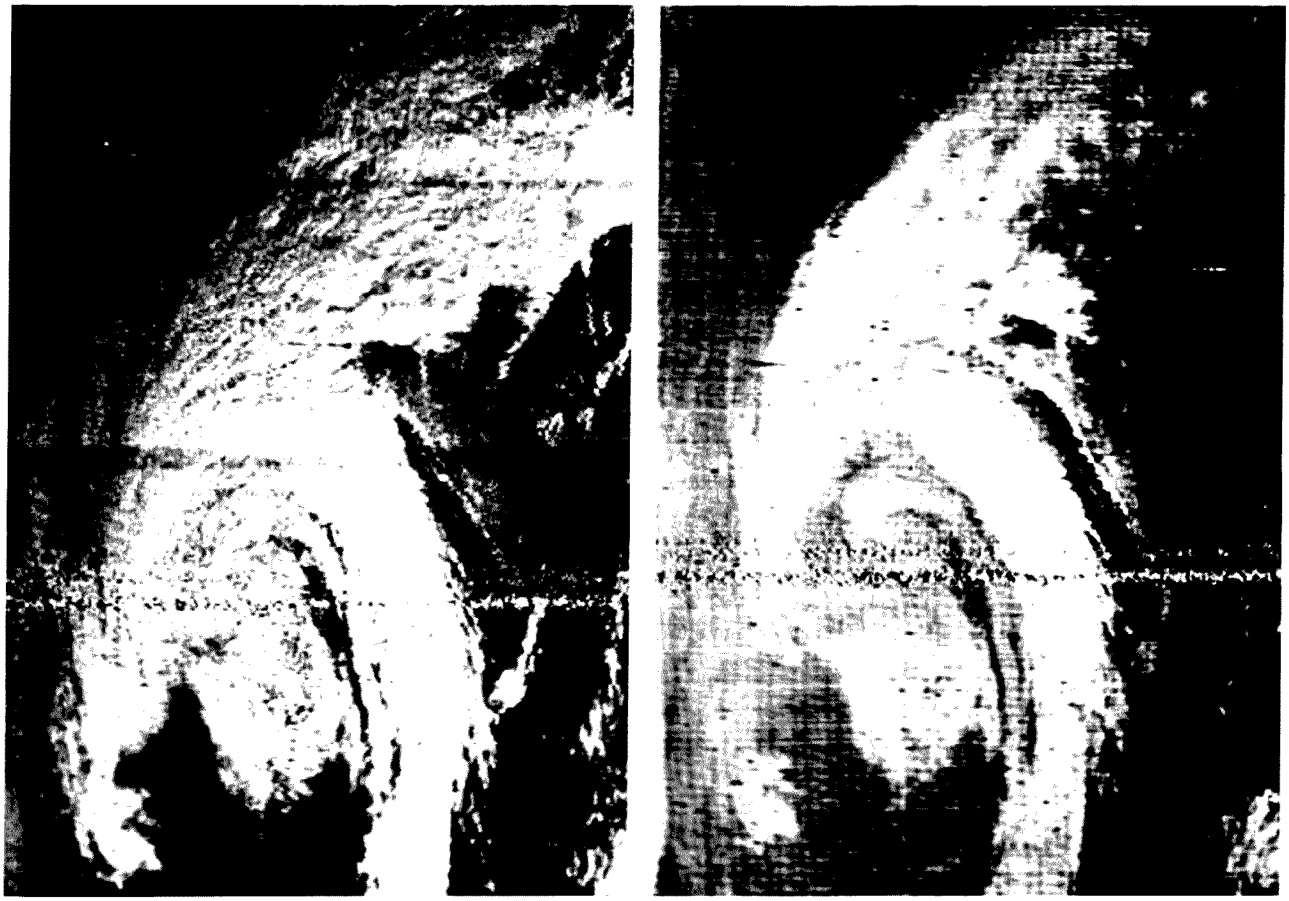

Photo 1. Visible light (left) and infrared (right) readout from a single NOAA 4 pass over eastern North America on 20 November 1975. The differences in the two views, which represent the same area as seen at the same time, are due to the characteristics of the visible and IR imaging systems. The visible channel sensors respond to light in much the same manner as the human eye, and all cloud structures are shown where sufficient light exists. The upper right portion of the visible view (northwest) is dark because of low sun angle at high northern latitudes at this season and time of day (early morning). The IR channel responds to heat, with the lightest areas representing cold zones and with darker areas progressively warmer. Low clouds do not appear (as they are near ground temperature), while the Atlantic (lower right) appears darker than the land areas to the west because the ocean waters are warmer than the ground at this season of the year.

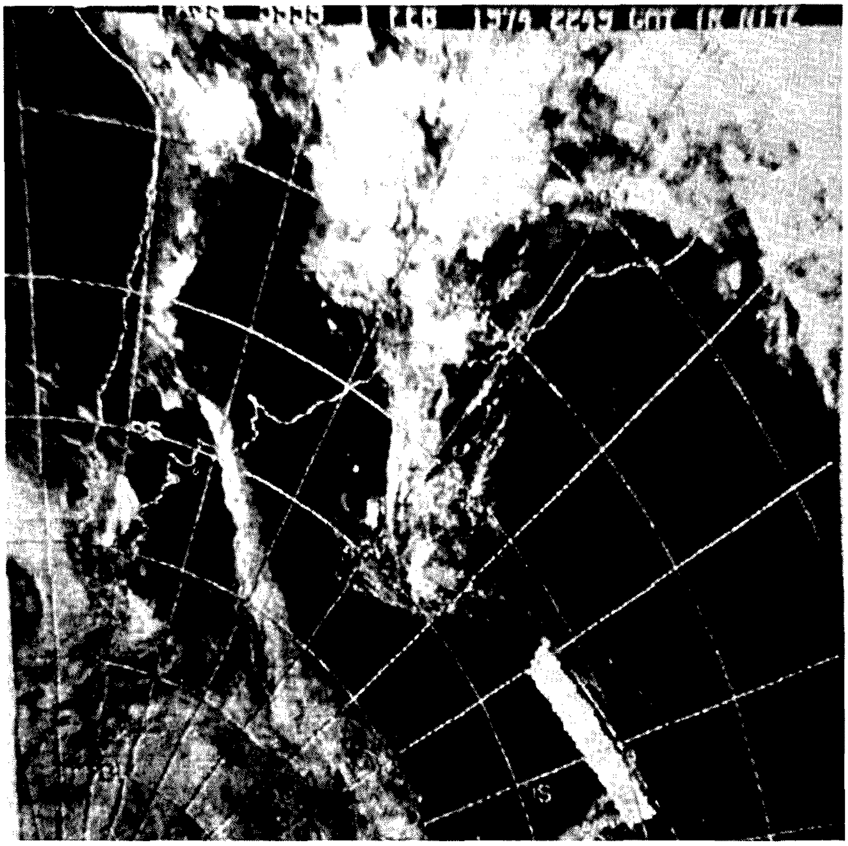

Photo 2. An example of an APT WEFAX transmission from ATS 3. Such computer gridded pictures are put together on the ground from NOAA SR data and are relayed through the geostationary satellite for worldwide distribution to any station within line of sight of the satellite. The view shown here represents ¼ of a polar projection of the southern hemisphere showing most of South America and part of Antarctica. In this case the picture was put together by computer analysis of NOAA IR readout. Grid lines were superimposed and the picture was then relayed through the satellite.

line SR service can be modified for 120 line display with comparatively little difficulty. Baseband video bandwidth for the IR "channel" of the 48 line SR system is 450 Hz while the visible channel bandwidth is 900 Hz. As with the APT mode, if 2400 Hz audio filters are used they should have a bandwidth at least equal to that of the channel in use to get full picture resolution.

Operational Satellite Systems. There are two general types of satellite systems of potential use to amateurs – polar orbiting satellites and geostationary satellites. Each will be discussed separately.

Polar Orbiting Satellites. Polar orbiting satellites, actually in near polar orbits, provide continuous real-time transmission of cloud cover pictures on a worldwide basis. Table 2 summarizes the data on operational polar orbiting satellites. Each of these satellites provides either 2 or 3 useful daylight passes per day within range of a given ground station, and an equal number of night passes. All of the systems provide useful daylight coverage and some provide night pictures as well. ESSA 8, launched in late 1968, is the oldest of the operational polar orbiting spacecraft and is the last of its series. Using a TV camera tube and transmitting APT pictures on 137.62 MHz, this satellite provides as many as three useful pictures on a single pass during daylight hours. The spacecraft is solar powered and is shut down on night sides of its orbit where the TV camera is non-functional. Early in 1975 the performance of camera #1 dropped past the useful level and camera #2 was switched on to replace it. Late that year the camera shutter on the spacecraft began to malfunction – a prelude to total system failure in earlier satellites in the ESSA series. It is probable that this particular satellite may well be shut down by the time this article appears in print and no future satellites of the series are planned.

The primary polar orbiting satellite series now in use and planned for use well into the 1980s is the NOAA satellite series, of which NOAA 3 and 4, operational at the time this is written, are prime examples. These satellites transmit SR pictures at a frequency of 137.5 MHz with monthly one-day tests at 137.62 MHz. Their orbits are essentially identical to that of ESSA and are chosen so that the satellite passes over a given location at about the same time every day. The SR systems aboard these spacecraft provide both visible and IR cloud cover pictures during daylight passes and IR pictures during evening passes. Photo 1 shows an example of both visible and IR data from a single pass. The data display is in the form of a continuous strip of picture material that is received as long as the spacecraft is above the horizon. The examples shown represent about 10 minutes of coverage from the pass in question. Such satellites are ideal for obtaining localized weather patterns, for it is possible to get a direct overhead view of local weather systems and for a single pass the weather pattern for about half of the North American continent – in a strip extending from Greenland to Yucatan – can be obtained for a station located in the north-central U.S. NOAA 4 is currently the primary spacecraft in the series with NOAA 3 serving as a backup. If the orbit of NOAA 3 brings it in conflict with NOAA 4, 3 is switched to 137.62 MHz. NOAA 5 is scheduled for launch in early 1976, at which point NOAA 3 will be deactivated and NOAA 4 will serve as the backup spacecraft if all goes well.

Name	Frequency (MHz)	Subpoint	Mode	Products
ATS 1	135.6	149° W	APT	WEFAX – Satellite predict messages, grey scale, computer gridded cloud cover pictures from NOAA data (western U.S., Pacific, E. Asia, E. Africa)
ATS 3	135.6	69° W	APT	WEFAX – Similar to ATS 1 except coverage centers on eastern U.S., Atlantic, Europe, West Africa, South America
SMS 1	1691	75° W	APT	WEFAX – Computer gridded visible and IR views derived from on board spin scan very high resolution radiometer, pictures sectorized from full earth disc
SMS 2	1691	115° W	APT	WEFAX – Similar to SMS 1

Table 3. Geostationary satellites transmitting weather picture data.

Geostationary Satellite Systems. Geostationary satellites are satellites whose orbital path lies over the equator. The altitude of the satellite is approximately 22,000 miles so its orbital period is exactly 24 hours. Since the satellite orbital period is equal to the period of rotation of the earth the satellite always maintains the same position over the equator. This position is known as the satellite *subpoint.* Since such a satellite maintains the same position over a point on the earth, as seen from the earth it appears to remain in the same part of the sky and hence need not be tracked – the antenna can merely be lined up and fixed in place. The extreme altitude of these satellites means that most of a hemisphere can be viewed from them and they are an ideal camera platform for viewing the full earth disc or relaying signals from a ground station to any station within view of such a satellite. Table 3 summarizes the geostationary satellite systems of interest to amateurs. ATS 1 and 3 (ATS is an acronym for *A*pplications *T*echnology *S*atellite) are both experimental satellites to test the feasibility of hemispherewide radio communications relays for a variety of purposes. One of the ways in which these satellites are used is in the transmission of WEFAX (weather facsimile) pictures in the APT mode. These pictures are transmitted on a frequency of 135.6 MHz on a regularly scheduled basis and include "predict" messages for calculating orbits of the various polar orbiting satellites, gray scale transmissions, and cloud cover pictures. The latter are computer gridded to show lines of longitude and latitude and geographic boundaries. Photo 2 shows a typical transmission of WEFAX data from ATS 3. If both satellites are in range of a given ground station it is possible to acquire cloud cover pictures spanning the entire world. Both of these satellites have been in operation for several years and should they fail they will not be replaced as they are strictly experimental. The WEFAX program, however, will be continued with a new series of geostationary satellites of the SMS/GOES type. The SMS satellites are prototypes of the operational system (SMS stands for *S*ynchronous *M*eteorological *S*atellite) while the GOES satellites (*G*eostationary *E*nvironmental *S*atellite) will be the operational versions. GOES 1 is scheduled for imminent launch as this is being written while SMS 1 and 2 are presently in orbit. These satellites produce extremely high resolution pictures which are transmitted to special ground stations for computer processing. Although reception of the original pictures is still impractical (not impossible, it simply costs too much as yet), the computer processed versions are available, along with other products, as APT WEFAX transmissions. The major drawback of these satellites is that transmission takes place on S band at 1691 MHz. Suitable converters for converting S band signals to the 137 MHz range used for reception of ATS and polar orbiting satellites can be put together from commercial components (8) but such an approach is prohibitively expensive for most of us. The subject of S band receivers will be discussed later. Just to show that the task is not beyond amateur capability, Photo 3 is included as an example of SMS WEFAX reception. This particular picture was received by Roy Cawthon of Atlanta, Georgia, who has the only amateur S band system in operation at the time this is being written. Just to show that amateurs are not lagging behind, Roy's station is one of only 5 in the world at the present time.

All APT and SR satellite transmissions, regardless of frequency, use FM modulation with 9 kHz deviation.

Assembling a Satellite Station. There are very few references that provide all of the information you might require to set up a station from scratch. Vermillion's NASA report (23) describes a long crossed yagi antenna, a tube-type FM receiver and preamp, and a CRT display system with APT capability and modifications for an early type of SR display. Later government publications are available to update SR display for current standards. Kennedy (6) describes a completely up-to-date display system including an FM receiver with a PLL detector to eliminate Doppler effects. The three part article is very complete and is

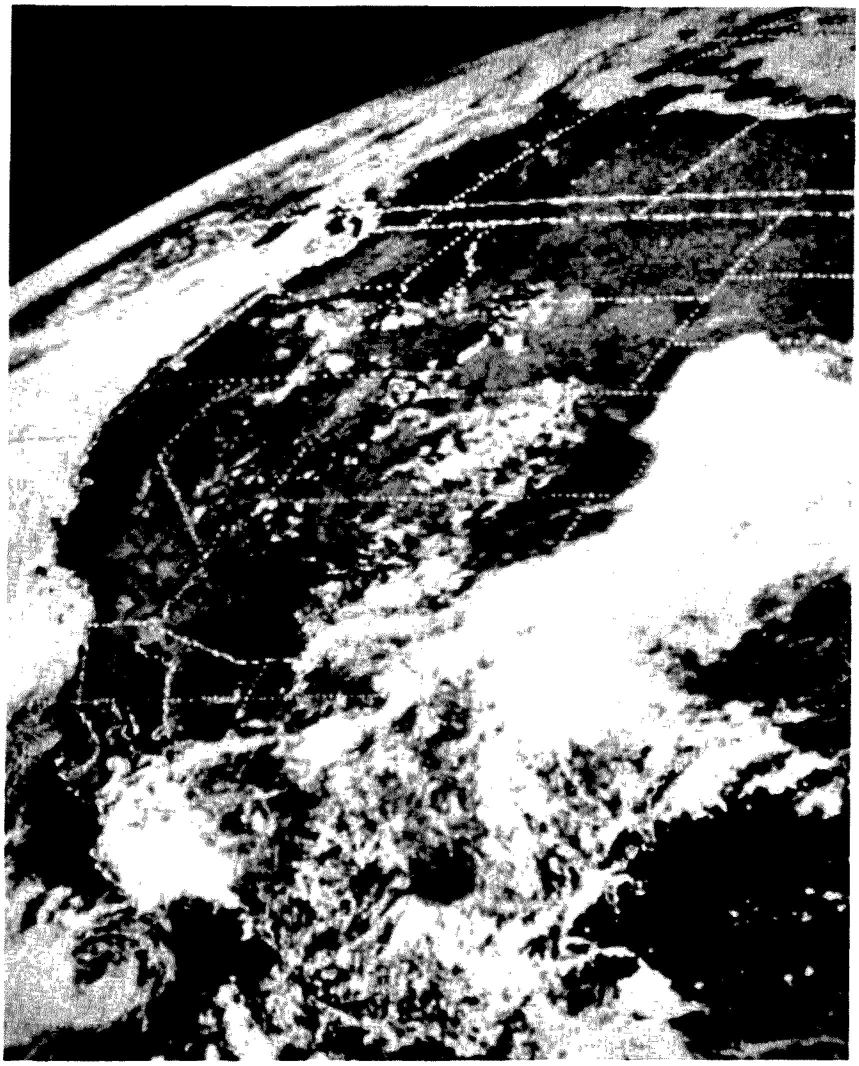

Photo 3. An example of an SMS S band (1691 MHz) WEFAX transmission as received and displayed by Roy Cawthon of Atlanta, Georgia. Such pictures are derived from the very high resolution spin scan radiometer on the spacecraft, which takes both visible and IR pictures of the full earth disc as seen by the satellite. The pictures are gridded on the ground and re-transmitted through the satellite. Operational versions of this series (GOES satellites) will transmit such pictures and a variety of other WEFAX products. The development of effective, low cost S band converters is one of the major challenges facing amateur satellite experimenters.

useful reading if you plan your own system design. The third source (21)[1] is one I am particularly partial to simply because I wrote it! This one book contains all of the information required to construct a complete satellite receiving station including numerous accessories. The construction articles are complete and various options are presented for most system requirements. Chapters include antennas, receivers and preamplifiers, CRT display systems, a FAX system, tracking, digital orbital timers, and ways to completely automate station operations. For those who would like to do additional background reading or who would wish to put together a station based on several different options, the following references, grouped by subject, will be useful reading.

Antennas. ATS or polar orbiting satellite reception requires the use of a circularly polarized antenna with the gain requirements for ATS being somewhat more stringent than for the polar orbiting spacecraft. (9) describes a very simple yagi for manual tracking that is suitable for polar orbiting spacecraft if you have someone willing to stand outside and operate it! (21) describes the construction of a short crossed yagi antenna suitable for polar orbiting satellites and discusses various commercially available antennas suitable for ATS or polar orbiting systems. (23) describes a longer crossed yagi suitable for use with either ATS or ESSA and NOAA spacecraft. (22) includes some interesting ideas on antenna mounting which might prove useful. You will notice the emphasis on crossed yagi antennas for circular polarization. This is simply because they have proved far easier to construct and mount than helix antennas, the other major alternative (3), (7). (3) contains useful design and mechanical data for crossed yagis in the Space Communications chapter.

[1] To be published in early 1976.

Reception of S band SMS/GOES signals requires a dish antenna. NASA recommends a 10 foot dish but Roy Cawthon has gotten by with a 6 foot version. The use of modern low-noise transistors may make possible the use of still smaller dishes in the order of 4 feet. I certainly hope so since my own four-footer is mounted in the back yard pointing hopefully skyward! (3) contains construction details for a 10 foot stressed parabolic array but this antenna would have to be modified for permanent service. Numerous microwave antennas available on the surplus market are also an excellent approach.

Satellite Receivers. Satellite receivers for 135-138 MHz service should be FM with a 30 kHz i-f bandpass (15 kHz selectivity). This will accommodate maximum signal deviation (9 kHz) plus worst case Doppler shift (4.5 kHz). Crystal controlled channel selection with crystals for 135.6 MHz (ATS), 137.5 MHz (primary NOAA), and 137.62 MHz (ESSA and backup NOAA) will be required. Sensitivity should be 0.1-0.2 microvolts for 20 dB of quieting. Older receivers will require a preamplifier to set a desirable front end noise figure. A preamp mounted at the antenna is highly desirable as it effectively overcomes line losses that would otherwise degrade the system noise figure.

Reference (23) describes a tube-type receiver and mast-mounted preamp. (21) describes a kit, modifications to a commercial monitor receiver, commercially available preamps, and tips on selecting a surplus receiver strip for weather satellite conversion. (6) describes a solid state receiver with PLL i-f that is very effective. Passable results can also be obtained by modification of a commercial FM tuner (9) but this is a very makeshift approach.

Display Systems. There are two principal options for display of APT or SR pictures – a facsimile (FAX) recorder for printing pictures directly on paper and a cathode ray tube (CRT) display on a television-like screen in which the image is photographed for analysis. Both types of display systems are capable of resolving all of the picture details in either mode and each has its own advantages and disadvantages. FAX systems are mechanical devices which make the picture display immune to factors such as stray magnetic fields that might distort a CRT display, yet they require some care to construct and operate and need some maintenance to keep them in top operating condition. Some forms of FAX will give instant pictures with features visible during picture readout, while even the most involved photographic systems require only a few steps to view the picture. Some FAX systems excel at resolving fine structure in bright clouds that might be obscured by trace blooming in a poorly designed CRT system. The mechanical nature of FAX,

Photo 4. Visible channel imagery from a NOAA 4 SR transmission as displayed on a photographic FAX system. In this case the images from the 48 line SR system were displayed at 96 rpm with alternate lines (the IR image) electronically blanked. Such FAX systems provide extremely high quality, especially in defining the structure of bright cloud features. This particular pass (7 August 1975) was directly over the Great Lakes, which are faintly visible in the center of the picture.

however, means that you are fixed to a single size format and changing picture modes involves complex mechanical and/or electrical changes or the construction of a recorder for each mode you wish to operate. CRT systems, in contrast, are relatively easy to construct and building them for multimode service is an easy task. Direct viewing of pictures is difficult, however, and photographs are most desirable. This is one handicap of the CRT option. Polaroid film provides instant pictures but at some expense if you read out large numbers. Roll film provides very inexpensive recording of the pictures but at some delay while the film is processed and printed. Such photos can, however, be printed at any size desired. Use of a CRT system involves less "fuss" than a FAX display, which is a factor that makes it desirable in situations where only occasional use is required. Properly designed systems of both types will be about equal in overall performance so the selection task is complicated. Active satellite stations often have both types in operation to fit the needs at hand.

The facsimile options are quite varied and a number of tradeoffs must be considered to determine which might be best for your use. The three major systems involve direct printing on film or paper using a modulated light source, printing on electrolytic paper, or printing on electrostatic paper. There is little doubt that photographic FAX systems offer the highest quality pictures – but at some inconvenience. They must be operated in the dark or near darkness in the case of systems that print on paper, and photographic processing is required. Anderson's pioneering work (2) describes a photographic FAX system for APT use which prints on film. McKnight's modifications of this system (7) result in a system that is somewhat more convenient in that printing is done directly on paper, thus reducing cost and time required. Ruperto (11) describes a direct printing photographic system derived from the work of W6KT, and Taggart (20) provides a complete construction article for a 48 line NOAA system along the same lines. Although both (11) and (20) are designed for 48 line SR display, either could be modified for APT with little difficulty. (21) provides full construction information and design data for a FAX system for 48 or 96 line SR display with modification notes for upgrading to future 120 line SR systems (Photo 4). With very slight modifications this recorder (120 line version) could also be used for APT service. Printing on electrolytic paper results in some loss of image quality but this is compensated for in some situations by the fact that the pictures can be printed out for immediate viewing in a lighted room. Winkler's SSTV FAX system (25) could be easily modified for SR or APT use – in fact, the SSTV version was a spin-off from his various satellite recorders. Photo 5 shows a sample of Winkler's APT readout on electrolytic paper – a picture from ESSA 8 in its better days! Electrostatic paper is perhaps the least satisfactory alternative, mostly due to the difficulty in getting a suitably good gray scale. Winkler's modification of a surplus Western Union Deskfax machine (26) is perhaps the quickest way to get some sort of FAX system going. While hardly the equal of these other systems in picture quality, Osborne's FAX recorder (10) certainly takes the prize for originality – it is built up around a windshield wiper motor and gear assembly!

Photo 5. Display of an APT picture from ESSA 8 passing over the west coast. This picture was displayed by Linsay Winkler using a homemade continuous readout FAX machine and Alden electrolytic paper. Although such systems do not have the ultimate in fine detail of a photographic FAX or CRT system, they are still excellent. The slight degradation in image quality is compensated for by the fact that the image can be read out in normal room lighting and is visible as it comes out of the machine. Similar continuous readout recorders are excellent for present and future SR systems as well.

CRT system options are quite varied and many approaches are possible depending upon equipment already on hand. Three alternatives are presently the most popular – display on an oscilloscope, display on conventional SSTV monitors, or construction of a monitor tailored for satellite picture display. The oscilloscope approach involves construction of a suitable "black box" that will provide Z axis video modulation to the scope and appropriate waveforms for horizontal and vertical deflection. Osborne's circuit (9) is probably the simplest of these and will give satisfactory results in the APT mode if a better receiver is used. Toben's circuit (22) is more complicated but will produce somewhat more reliable results. Kennedy's system (6) is the most elegant of the group and will provide excellent results in both APT and SR service.

The popularity of SSTV has led a number of people to experiment with display of satellite pictures on slow scan monitors. (13) is a very simple APT adapter that can be used with a number of monitor circuits and suitable modifications for adding SR display are included in (14). Additional circuit ideas are incorporated in (17) that permit use of the adapter with Robot monitors or even TV sets. Owners of Robot SSTV equipment should consider contacting Robert Schloeman WA7MOV, who has designed an excellent adapter circuit specifically tailored for use with the Robot SSTV monitor.

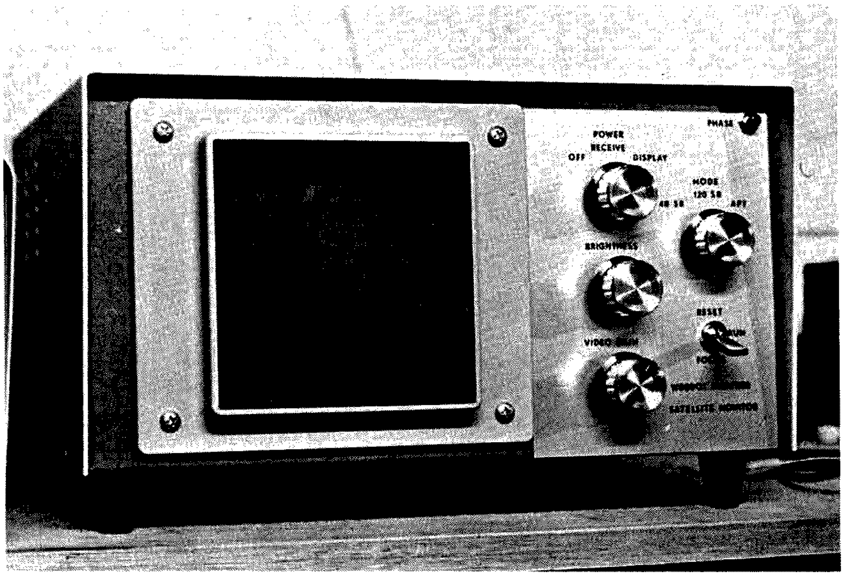

Photo 6. A solid state multimode satellite monitor built by the author. This circuit is featured in the Weather Satellite Handbook (21) and has switch-selected options for display of 48 line SR, future 120 line SR, and APT picture modes. Such monitors are compact and are quite easy to operate, making them a highly desirable project for stations seriously interested in weather. Using all new components and high class packaging, such a monitor still costs less than $300. Less elegant packaging and a search for junk box components can reduce costs to a fraction of this even in such a comparatively advanced project.

The construction of a complete display monitor is perhaps the most reasonable approach for individuals lacking extra oscilloscopes or SSTV monitors. Vermillion's report (23) describes a monitor of sorts built around a commercially available oscilloscope module. Spillane (12) described an APT monitor using tube circuits that would still be useful with some modifications of the sync detection circuits. The advanced version of Osborne's circuit (9) is another choice for APT display. (21) describes a complete multimode solid state satellite monitor complete with printed circuit artwork and component layouts. Photo 6 shows a version of this monitor which is also described in (21). The latter reference includes data on the simple addition of 120 line SR capability which is incorporated in the unit shown (48 line SR, 120 line SR, and APT capability). Such a monitor certainly represents the ultimate in a compact display system.

Satellite Tracking. Although tracking of polar orbiting spacecraft appears to be an imposing task, it is not at all difficult to accomplish. (24) is interesting reading regarding satellite orbits in general and (15) outlines all the essential features involved in satellite tracking. (21) contains a full chapter on the subject which in addition to the tracking of polar orbiting satellites also includes aiming data for geostationary satellites, alternate sources of tracking data, and a simplified model for long term orbital predictions.

Accessories. These components include desirable station features that are not absolutely necessary but do improve operating convenience. (16) describes a digital orbital timer that eliminates the need to acquire daily prediction data or interpolate from a clock when tracking and (18) describes the use of such a timer to completely automate station operations, including turning on the recorder, tracking, and station shutdown at the end of a pass. (17) includes some useful accessories such as an active 2400 Hz filter and a crystal controlled 2400 Hz reference source, either of which would be a useful addition to many of the systems covered in these references. Brush (4) describes a novel circuit for contrast enhancement in the SR IR channel display and (23) includes a more complicated circuit to accomplish much the same task for FAX display.

This about covers most of the technical features. A very interesting summary of different weather satellite products is contained in a report by Hoppe (5) that not only describes the pictures from various satellite systems but also shows the different ways in which these are computer processed and mosaicked for greater utility. If you get a system in operation you might wish to learn a little more about how the cloud systems you see relate to surface weather. A wealth of information on this subject is contained in Anderson's paper (1) which, with a little study, will enable you to derive really meaningful data from your cloud pictures.

Now there are probably lots of readers of this article who might never consider setting up a satellite station. You have read this article out of curiosity and the desire to simply learn a little bit about another facet of this far-flung hobby of ours. This is one of the things that makes it interesting to receive your magazine every month. But even if you are not interested in weather satellites, let me outline a challenge that may appeal to some of you. I have mentioned previously the difficulties involved in putting together a suitable S band converter for use with the SMS/GOES satellite series. The commercial modules (8) are far too expensive for most satellite buffs and Roy Cawthon's success was due in large part to his willingness to invest a fair amount of money and a huge block of time in getting his system going. It is not one that could be easily duplicated by stations now receiving ATS WEFAX who would like to get in on the action up on S band. Several amateurs are actively working on the design and construction of suitable S band converters in the hopes of pushing down price and complexity to the point that others could think seriously about adding S band capability to their operations. It is too early to say if these efforts will be successful but it is a virtual certainty that a lot of you out there are seriously interested in UHF and microwave experimentation. A successful S band converter would be a boon to satellite stations throughout the world and there is no doubt that should any of you develop such a system, you could certainly put together a description of the circuit that would instantly be accepted by a magazine like *73*. The specifications run something like this:

Input Frequency – 1691 MHz
Output Frequency – 137.5 MHz
Front end noise figure – 2.5-4.5 dB
Front end gain – 20 dB min.
Mixer noise figure – 9.5 dB max (assuming 1.5-2 dB first i-f noise figure)

NASA's solution is a $900 preamp, a $200 mixer, and a $900 LO chain for a total converter cost of $2000. With today's technology it would seem that amateurs could do the same job for $200 – maybe a little more, perhaps somewhat less. Any UHF or microwave buffs out there who would like to give it a try? I would be happy to correspond with anyone who would. Any approach is valid although perhaps microstriplines are best from the point of view of easy duplication. Maybe you like to design but hate to build, in which case microstripline design data around specific rf transistors would be most welcome – needless to say full credit would be given for any successful design input. Perhaps you have access to suitable S band test equipment and would be willing to help set up gear that others might construct – if so I would certainly like to hear from you. An easily

duplicated S band converter would make you famous in weather satellite circles even if you never watch a single picture – see how easy it is to get involved? Hundreds of APT stations throughout the world will be out of business in terms of WEFAX if such a converter is not forthcoming before the ATS satellites expire. This one area is certainly a challenge to anyone with the expertise to once again show the "professionals" what amateur radio can accomplish. The more people who are working on this particular task the more certain will be an eventual solution!

Experimenting with weather satellites is certainly one of the more fascinating peripheral areas in which amateurs can participate. One of the simpler systems represents an ideal short-term project to discover if you might be interested, but even the most sophisticated systems, equal to commercial display units costing over $10,000, need not be expensive. The multimode monitor shown in Photo 6 is capable of displaying pictures from present and future APT and SR systems and yet even with the comparatively "deluxe" packaging employed it can be built for less than $300 – less than a commercial SSTV monitor. For less than what some amateurs are willing to spend on one of the newer FM transceivers it is possible to construct a complete satellite station that will operate when you aren't even home. Stations with fewer refinements have been constructed by students as science fair projects for a small fraction of this cost. Why not look through some of these references and give it a try? ■

Literature Cited

(1) Anderson, R.K. *et al.* 1974. Applications of meteorological satellite data in analysis and forecasting. *ESSA Technical Report NESC 51* (reprint). $1.75*

(2) Anderson, W. 1965. Amateur reception of weather satellite picture transmissions. *QST*, November.

(3) *The A.R.R.L. Antenna Handbook.* American Radio Relay League, Newington CT. Chapter 12.

(4) Brush, R.J.H. and P.E. Baylis. 1973. Contrast expansion processor. *Wireless World*, December.

(5) Hoppe, E.R. *et al.* 1974. Catalogs of operational satellite products. *NOAA Technical Memorandum NESS 53.* $3.00*

(6) Kennedy, G.R. 1974. Weather satellite ground station. *Wireless World*, November, December and January 1975.

(7) McKnight, C. 1968. Evolution of an amateur weather satellite picture station. *QST*, April.

(8) Nagle, J.H. 1974. A method of converting the SMS/GOES WEFAX frequency (1691 MHz) to the existing APT/WEFAX frequency (137 MHz). *NOAA Technical Memorandum NESS 54.* $3.00*

(9) Osborne, J.M. 1971. Receiving weather pictures from satellites. *Wireless World;* basic system in October issue, advanced system in November issue.

(10) *Ibid.* 1975. Facsimile scanner. *Wireless World*, October.

(11) Ruperto, E.F. 1974. Weather satellite pictures picked up in the home. Amateur Scientist section, *Scientific American*, January.

(12) Spillane, J. 1969. A cathode ray tube display unit for satellite weather pictures. *QST*, June.

(13) Taggart, R.E. 1974. Western satellite pictures on your SSTV monitor. *73 Magazine*, September.

(14) *Ibid.* 1974. A modified WB8DQT satellite. *73 Magazine*, December.

(15) *Ibid.* 1975. How to find the satellite. *73 Magazine*, January.

(16) *Ibid.* 1975. What time is the next satellite? *73 Magazine*, February.

(17) *Ibid.* 1975. More weather satellite pictures. *73 Magazine*, June.

(18) *Ibid.* 1975. Automating satellite reception. *73 Magazine*, July.

(19) *Ibid.* 1975. How about a weather satellite monitor? *73 Magazine*, August.

(20) *Ibid.* 1975. A satellite fax system you can build. *73 Magazine*, September, October.

(21) *Ibid.* 1976. *The Weather Satellite Handbook.* 73, Inc., Peterborough NH 03458.

(22) Toben, G.H. 1968. Electronic system for recording satellite transmissions. *Ham Radio*, November.

(23) Vermillion, C.H. 1969. Weather satellite picture receiving stations. *NASA SP-5080.* $3.00*

(24) Widger, W.K. 1974. A plotting device for predicting the orbit of an earth satellite. Amateur Scientist section, *Scientific American*, May.

(25) Winkler, L. 1973. A fast scan facsimile system with SSTV compatability. *73 Magazine*, March.

(26) *Ibid.* 1974. Facsimile transceiver for weather satellite pictures. Technical Correspondence, *QST*, May.

**References marked with a single asterisk are U.S. government publications which are available from the National Technical Information Service, U.S. Department of Commerce, Sills Building, 5285 Port Royal Road, Springfield VA 22151. Such government publications are also available from large public libraries or universities with holdings of government documents.*

Photo 7. One drawback in improperly operated CRT display systems is that trace "blooming" often obscures fine features in very bright clouds. This photo of a NOAA pass over the central U.S. on a very cloudy winter day shows that properly operated CRT systems need not have this problem. This particular picture was displayed on the 5" CRT monitor described in reference (19).

Oscar Orbits

Oscar 6 Orbital Information: Orbit	Date (May)	Time (GMT)	Longitude of Eq. Crossing °W	Mode	Oscar 7 Orbital Information: Orbit	Date (May)	Time (GMT)	Longitude of Eq. Crossing °W
16196	1	0121:03	75.3	B	6669	1	0028:10	56.8
16208	2	0020:59	60.3	A	6682	2	0122:27	70.4
16221	3	0115:55	74.0	B	6694	3	0021:48	55.3
16233	4	0015:51	59.0	A	6707	4	0116:05	68.8
16246	5	0110:47	72.8	BX	6719	5	0015:25	53.7
16258	6	0010:43	57.8	A	6732	6	0109:42	67.2
16271	7	0105:38	71.5	B	6744	7	0009:02	52.1
16283	8	0005:34	56.5	A	6757	8	0103:19	65.6
16296	9	0100:30	70.3	B	6769	9	0002:39	50.5
16308	10	0000:26	55.2	A	6782	10	0056:56	64.0
16321	11	0055:22	69.0	B	6795	11	0151:13	77.6
16334	12	0150:17	82.7	AX	6807	12	0050:34	62.4
16346	13	0050:13	67.7	B	6820	13	0144:51	76.0
16359	14	0145:09	81.5	A	6832	14	0044:11	60.8
16371	15	0045:05	66.5	B	6845	15	0138:28	74.4
16384	16	0140:01	80.2	A	6857	16	0037:48	59.3
16396	17	0039:57	65.2	B	6870	17	0132:05	72.8
16409	18	0134:52	79.0	A	6882	18	0031:25	57.7
16421	19	0034:48	64.0	BX	6907	19	0125:42	71.2
16434	20	0129:44	77.7	A	6907	20	0025:03	56.1
16446	21	0029:40	62.7	B	6920	21	0119:28	69.6
16459	22	0124:36	76.5	A	6932	22	0018:40	54.5
16471	23	0024:32	61.5	B	6945	23	0112:57	68.0
16484	24	0119:28	75.2	A	6957	24	0012:17	52.9
16496	25	0019:24	60.2	B	6970	25	0106:34	66.4
16509	26	0114:19	74.0	AX	6982	26	0005:54	51.3
16521	27	0014:15	59.0	B	6995	27	0100:11	64.8
16534	28	0109:11	72.7	A	7008	28	0154:28	78.4
16546	29	0009:07	57.7	B	7020	29	0053:49	63.3
16559	30	0104:03	71.4	A	7033	30	0148:06	76.8
16571	31	0003:59	56.4	B	7045	31	0047:26	61.7

HAM HELP

The first thing I would like to say is that I think you have a very fine magazine. You sure did a good job of getting my interest back into ham radio. I picked up your November issue out of curiosity, as I was brousing around a magazine counter. I had a Novice license back in 1967 and 1968 when I was in high school. But after that I sort of lost interest. As a result of that issue, I also picked up your January issue, which was as good as the other, if not better. Your influence caused me to purchase your 14 wpm tape to help get the old code speed up to at least a tolerable level by the FCC.

Now for my problem. I would appreciate it if any of the readers in the Warminster, Pa. area have any information about ham clubs in this area. I would like to get involved with one, plus at the same time it will help me to get back on my feet again.

William K. Seitzinger
753 Cheryl Drive
Warminster PA 18974
675-6252

Help!

Bret Marquis
1843 Ocean Front
Del Mar CA 92014

Put my name in your Ham Help page. I can help a Novice, Tech, or General with the basic theory, and if I don't know the answer to some of their questions I know a number of people who do.

David W. Thompson
1412 15th Ave.
Parkersburg WV 26101

Please add our names to ur list of Ham Helpers:

Lou (WB0NRU) and
Annette (WB0PZM) Hinshaw
PO Box 111
Hays KS 67601
Phone: 625-7768

Please add my name to your list of amateurs who are willing to lend assistance to aspiring newcomers to *the fraternity of amateur radio.* Also, may I say thanks for publishing a fine business ham magazine.

Ricardo H. Nabor K9GYO
4926 So Lotus Ave.
Chicago IL 60638

I need help brushing up on theory and putting my station back on the air.

Tony Carlozzi WN1UHU
88 Bartlett St.
Brockton MA 02401

Richard A. Little K9EEH
407 - 15th Avenue
Sterling IL 61081

Scan Your HR212

Wanting some type of scanner for my Regency HR212, I got out all my ham magazines and came upon the scanner described by K2LZG in the February 1973 issue of *Ham Radio.* I had never built anything using ICs, so I said to myself you might as well get started now as never. After many nights of burning the midnight oil, I finally came up with the right hookup for the HR212.

The channel selector in the HR212 applies a ground to the appropriate rf choke (L501 through L512) which places a forward bias on the diode. This action provides an rf path for the crystal to turn on.

I use a +2 volt signal to stop scan and a zero volt signal to enable scan. You can take the squelch voltage off the white jumper wire which is located near Q105 and C137 located on the i-f-audio board. You can pick up the 12 volts anywhere after the on-off switch; I took mine off the red wire on the on-off switch. To connect the six oscillators to the scanner I connected six wires, one to each rf choke (L501 through L506). Be sure to connect to the side of the choke going to the channel switch. I built my unit in a small plastic case obtained at the local Radio Shack. I used a small male jack mounted on the back of the box and brought the nine wires out the HR212 to the female plug. Also, I mounted six SPST toggle switches in series with the oscillators to the scanner, so I can switch any channel out I don't want to monitor. I mounted a SPST switch in series with the 12 volts to the scanner to switch off the scanner when I want to transmit. I use a MAN-1 7 segment readout for the channel indicator.

To use as a scanner just turn the channel switch to any unused channel and flip on the 12 volts, and scan away to your heart's content. ■

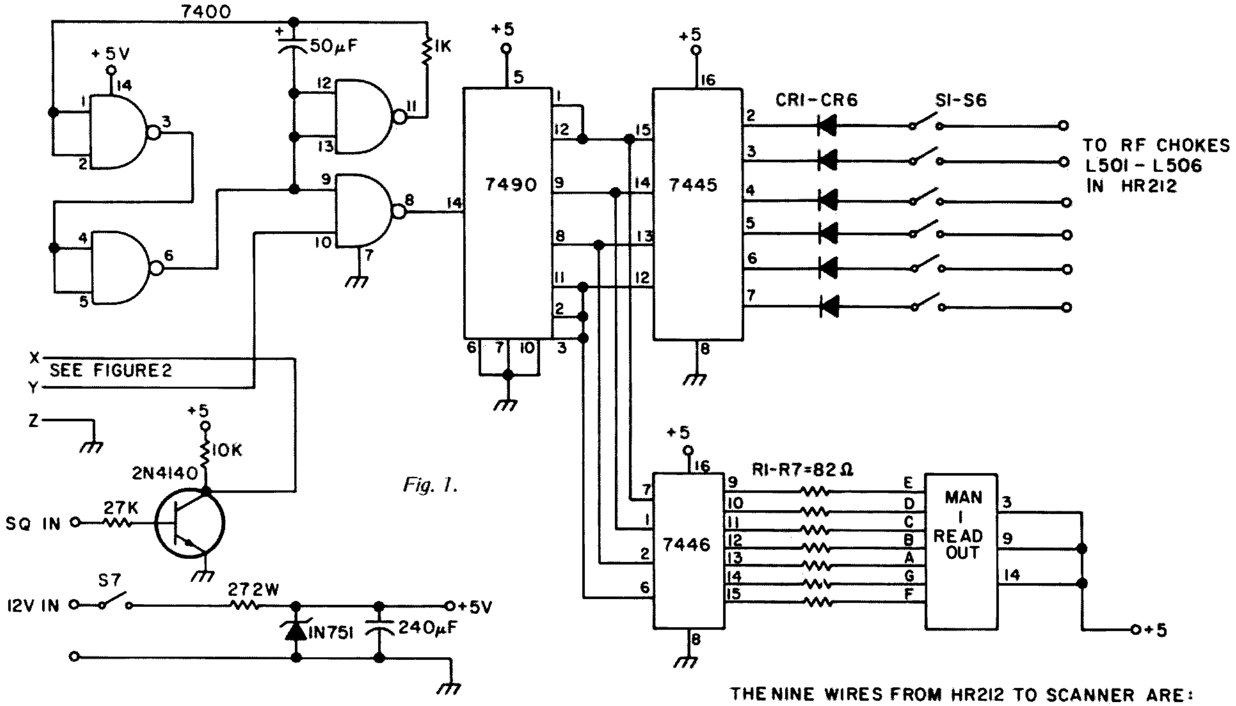

Fig. 1.

THE NINE WIRES FROM HR212 TO SCANNER ARE:

1. SQUELCH
2. +12V
3. GROUND
4.
5.
6. OSCILLATORS
7.
8.
9.

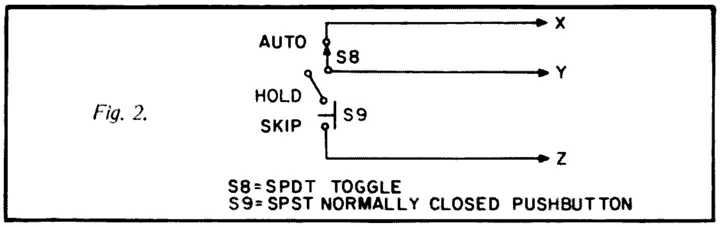

Fig. 2.

by Wayne Green W2NSD/1

I/O EDITORIAL

WANT TO MAKE A BUNDLE?

Not to be a name dropper, but sure as God made Yellow Transparent apples (to me the finest apples in the world) someone may make a fortune by coming up with a small computer system for small business and home use . . . if he plays his cards right. Best of all, nothing further has to be invented to make this a reality . . . some of the pieces have only to be put together.

Since a small black and white television set retails for around $85, a keyboard for $30, a microcomputer chip for $20, a cassette recorder for $20, how much could a small computer system cost embodying these elements? Oh, you'd need a display generator for the TV, an interface for the cassette, and some working memory. I'll bet someone could put such a contraption on the market for under $1000 in six months . . . and the price would be down to half that in six more . . . and eventually down to maybe $250 . . . or $125. The prices go down a lot when chips come available to handle each function . . . and eventually the whole works.

They're already starting to put RAM memory on CPU chips . . . and I/O interfaces too. Add a small built-in ROM operating system and a TV display generator . . . and the price plummets for a complete small computer system.

Do you want to wait for someone else to get into the business or start working on it yourself? Here's a way for someone to invest some time and money in a project which could be worth millions in a couple of years. MITS had about 15 people when they entered the uP business . . . now look at 'em!

HAM COMPUTING

Most of us can think of a lot of good things we might do if we had a computer . . . like keep track of stations contacted along with some details about them . . . maintaining an index to ham magazine articles that we might want to look up . . . determining Oscar intercept times and bearings . . . running all the functions of a repeater . . . playing any of the hundred or so popular computer games . . . getting into computer art forms with a color television set . . . experimenting with computer music . . . keeping track of repeater channels and locations . . . Morse code conversion . . . RTTY operation . . . things like that.

But the next question is a tough one . . . what hardware will it take to get involved in my interest . . . and, even more difficult, what programs . . . and where can I either get the programs or get the training so I can develop my own programs?

Frankly, we could use a lot of input on both hard and software. Let's see some articles on this . . . showing configurations of available gear which will do ham and hobby jobs.

If we look at the Sphere equipment we see that for most ham applications we will need their "200" system, their "B" package and BASIC on cassette. This comes to $860 for the "200," $205 for the extra 4K RAM memory and character generator ROM of package "B" and $100 for BASIC on a cassette . . . total $1165 for the hardware. Now, if you buy the BASIC textbook by Albrecht ($4), you will be ready to go with almost any program you want, doing your own programming. The DEC 101 Games in BASIC ($7) will launch you into the game biz. You will need a television set for the display.

The Sphere system will give you the computer, a character generator so you can read out the input and output of the system on a television set, a keyboard for inputting, BASIC programming language which takes about 5K of RAM memory, leaving about 3K for your use, and an I/O for a cassette recorder for use in entering programs, storing programs for later use, and storing data in long-term memory. That's a fairly complete small system.

If you want to go the MITS route you'll need an Altair 680 ($420), 12K of RAM memory ($825), an I/O port to interface the 680 with a video display terminal ($144), BASIC language on cassette ($75), cassette interface I/O port ($144), plus some sort of video generator and keyboard unit such as the Southwest Tech kit which runs about $282 (and then you have to build it . . . which is fun). The cost of this system would appear to come to around $1890. If you want to go the Altair 8800 route . . . and Ed Roberts points out in the Altair Computernotes publication that the 8080 chip is substantially better in his estimation than the 6800 chip . . . this would increase the cost even more.

The Altair 8800 computer is $621, expander boards are $93, a cooling fan is $20, three 4K RAM boards are $825, the cassette I/O is $174, the television typewriter I/O is $144 and BASIC language on cassette is $75, plus the $282 for the TVT kit comes to $2234.

To do any work involving data you want to keep on file you will need a couple more cassette control systems so you can use one cassette for your data base, a second for any update to the data base, and a third for the updated data base. This means two more I/O interfaces and control systems . . . it also means a lot of programming using BASIC. If you want to keep a file of every station you've contacted and be able to quickly get the data on someone, this is the system you'll probably want.

The same system would work fine for keeping track of magazine articles you might want to reference, recipes for the wife, addresses for a club, a file on music in your record collection, a list of repeaters, etc.

These systems will be a little slow in locating data in memory since they will have to scan your cassette tape for the data file wanted. It won't be long before we have relatively inexpensive tape systems which can be searched much faster . . . and relatively low cost floppy disk memory systems are on the way. Disks don't hold much more than cassettes, but they search very rapidly.

There are a lot more small computer systems coming along, but I haven't got much data on them as yet. It is almost impossible to understand some of the advertising literature in this field and even talking with the manufacturers can be frustrating, for some of them are so busy designing and turning out parts of their systems that they haven't given much thought to what it will be used for . . . or what problems the user may run into.

I would like to state that *73* is most anxious to hear from any ham computer hobbyists who have managed to put small systems together and get them to actually do something. Please let us know what you are using and how you programmed it. I would also be delighted to hear from *any* manufacturer who can state just what hardware and software is needed . . . and how much it will cost . . . to set up some hobby systems such as outlined above.

For instance, any of the small systems being marketed are quite capable of calculating the Oscar acquisition times, but where can you get the program for the calculation? Unless it is in either machine language for your particular chip or in BASIC, you won't be able to do much. And it has to be in a BASIC that is compatible with the BASIC you've got for your computer, just to make matters a little more complicated, for there are BASICS and then there are BASICS, from Mini-BASIC on up through Extended BASIC. Obviously we all need to know a lot more about this situation . . . and get some counsel on where to get the programs we need for Oscar, moonbounce times, etc.

Now is the day of the true pioneer as far as microcomputers are concerned . . . like sideband in the mid-50s . . . like FM in 1969 . . . and RTTY in the late 40s. We are a long way from the appliance operator phase of uP systems and these are the days which separate the men from the boys. Let me emphasize again that having fun with computers does not take super brains . . . it does not take a whole lot of money . . . it does not take education . . . all it takes is enthusiasm and persistence. And, if you are young in spirit, there is a very good chance that you can parlay your knowledge into a very comfortable living.

THE MAGIC OF FRESH ORANGE JUICE

The other morning, as I was squeezing oranges, I had a depressing thought. I remembered a bit on a recent Today show lauding the wonders of Florida. It was a film about the citrus industry there and they mentioned that two thirds of the Florida oranges are now processed into frozen concentrate. How many years since you have had fresh orange juice for breakfast?

Once you get into fresh orange juice you have a tough time gagging down the frozen stuff . . . or the "fresh" juice in cartons. You have to totally forget what orange juice tastes like to accept frozen. An electric juicer runs around $10 to $12.50 (Unity or Sears) and you can crank out a glass in about a minute . . . you don't thaw out a can of frozen much quicker.

Just as we have all come to accept the frozen juice alternative to do-it-yourself juice, with a loss of substance, most of us hams have come to accept our ham gear as either ready-built or in kits (paint by the numbers?). I have a strong feeling that the computer revolution in amateur radio will bring back a lot of the home squeezed flavor to our hobby . . . for, even if you work from an assembled or kit computer, you are still only about 25% of the way toward your goal. This is one field where the hardware is only the start and merely opens the gates for self-expression and creative fun via the programming you will be doing.

I hope that the manufacturers of computers won't be angry at me for letting the cat out of the bag, but the fact is that getting your equipment working is only a small part of the fun and challenge. Oh, in time a lot of the work will be done for you and will be available on tape or something . . . perhaps ROMs. At least, programs will be available for ordinary uses of the equipment . . . you will still be on

Continued on page 95

John A. Lehman WB8TUR
716 Hutchins #2
Ann Arbor MI 48103

Computer Languages-- Simplified

Anyone who wants to use a computer has to have a way to communicate with it. This article is a simple introduction to some of the languages which are used for that purpose. It is intended for rank beginners, so all of the programmers, software freaks and computer hot dogs in the audience might as well stop here. For anyone else, I'm going to try to keep everything in English (which is not a computer language, unfortunately) and avoid as much computerese as possible. So here goes.

One might start by asking, "Why have computer languages at all?" Back in the dark ages 25 or 30 years ago they didn't – the machines were wired up to do a certain thing and that's what they did. But, somewhere along the road, some bright fellow realized that it would be much more efficient if you could feed the machine a fairly long set of instructions and let it follow them. This also made for much greater flexibility, since you could give the machine different sets of instructions. These instructions are what a computer language communicates, and this article will go over some of the more common ones, to wit: Assembler, BASIC, FORTRAN, PL/1, COBOL and a little bit about some of the more specialized ones. But first let's look a little bit more at the nature of the beast we're dealing with.

It is helpful to think of a computer as a glorified electronic calculator. In fact, some of the more modern calculators really are computers. But let's look at the average four function calculator. It has a display, which is called an output device in computerese, and it has a keyboard, which is an input device. To do anything with it, you have to enter the numbers through the keyboard and then enter what you want done with them, be it to add them or whatever.

> Machine language is the closest we can get to what the machine actually speaks.

But suppose you want to do a mortgage calculation – say, figure out what your interest payments and principal payments are going to be each month for the life of the 20 year mortgage. This means that you're going to have to do a very repetitive calculation 240 times. It is to avoid this sort of hassle that real computers (and some fancy calculators) have stored program capacity – a stored program being nothing but a set of instructions inside the machine which get done without your standing there pushing all of the buttons each time. But now we have to get this set of instructions inside the machine, and that is where programming languages come in. We need a way to communicate the instructions to the machine.

In the case of a calculator, this isn't much of a problem. The "Instruction Set" (list of all of the instructions which the machine is able to follow) is hard-wired in. If you want it to add, you push +. This is obviously not too good an idea for a large computer, since the number of buttons gets pretty large. Besides, you tend to run out of symbols, which makes everything even more confusing. So we need some sort of language. The simplest one is called "machine language" and is the closest we can get to what the machine actually speaks. However, as any of you who have been following the articles in *73* about gates and such know, computers and other digital machines run on high and low levels of voltage. Since this is rather hard to see, we usually represent it with ones and zeros, or on and off lights. The whole thing is like trying to communicate using RTTY but doing it by ear instead of with a TTY machine, which is to say that it's a royal pain. Anyone who's into interpreting things like 01001101 01100001 and so forth can really get off on it, but for most of us there's gotta be a better way. Fortunately there is. Incidentally, if you ever get a microcomputer, those switches and lights on the front panel are used to communicate with the thing in machine language.

The next sort of language developed, and the one which is most widely available for microprocessors these days, is the assembler. Each type of computer has its own version; what it is, in short, is machine level logic – but using symbols and normal numbers rather than ones and zilches. Assembler is related to what you do with a calculator – in fact, any of you who own or use HP calculators have been using a version of assembler language usually known as Reverse Polish Notation. With an assembler language, you specify what number you want, where you want it put and what you want done with it; for example (to use HP assembler): "12, ENTER [*which puts it in the region where the arithmetic is done*], 2, x" multiplies 12 times 2 and comes up with

24. All assembler languages work this way, although many of them have dozens of commands and hundreds of locations where things can be put or obtained. This sort of computer language has a lot of advantages. It's very efficient not only where memory is concerned, but also with regard to execution time. This means that it's cheap to use. The assembler (the program which translates it into machine language) doesn't take up much memory either, which means it can be used in a microprocessor which doesn't have much memory (and memory costs like the devil, even these days). Using assembler, you can also anticipate situations where the machine might do something unexpected, since you're on the machine's logical level. Of course, it's got its problems too. It's hard to learn, not easy to use well, hard to debug (find errors) and is "machine dependent," which means that each machine has its own. To sum it up, a lot of people don't like to have to write: "12, enter, 2, x." They'd rather write "A=12 x 2." This is what "high level" languages let you do, along with all sorts of other convenient things. For this reason, almost all programming these days is done with one of the various high level languages, and the rest of this article will be about some of the more common of them.

First of all, a high level language is a computer language that is based on some combination of English and algebra. So, to write two plus two you would usually write "2+2." To tell the machine to print, you write PRINT, WRITE or something of that nature. The one thing to watch out for is that, although there are many different ways of writing one thing in English (and to a certain extent in algebra), a high level computer language has a very narrowly defined structure and vocabulary. This means that the computer equivalent of "I ain't got none" will be rejected. In other words, you have to be very careful when writing any sort of program for a computer, since errors (the computerese term is glitches) get caught faster than they would be by an old-fashioned high school English teacher.

Continuing the comparison with human languages, there are lots of different ones for computers, too. At first each company developed its own; now many of them are standard and thus can be used on any machine with few, if any, changes – unlike assembler languages. We still have a lot of computer languages, though. For example, the last time I checked the documentation, there were something like 35 different high level languages available for use with the University of Michigan computer system. The reason for having so many is that each language is designed to do some particular thing well (in jargon, they are problem based rather than machine based). This means that one language is good for mathematics (also called number-crunching), one is good for electronic circuit design, another for library use, and so forth. There are also a couple of general purpose languages – which happen to be the most popular for obvious reasons.

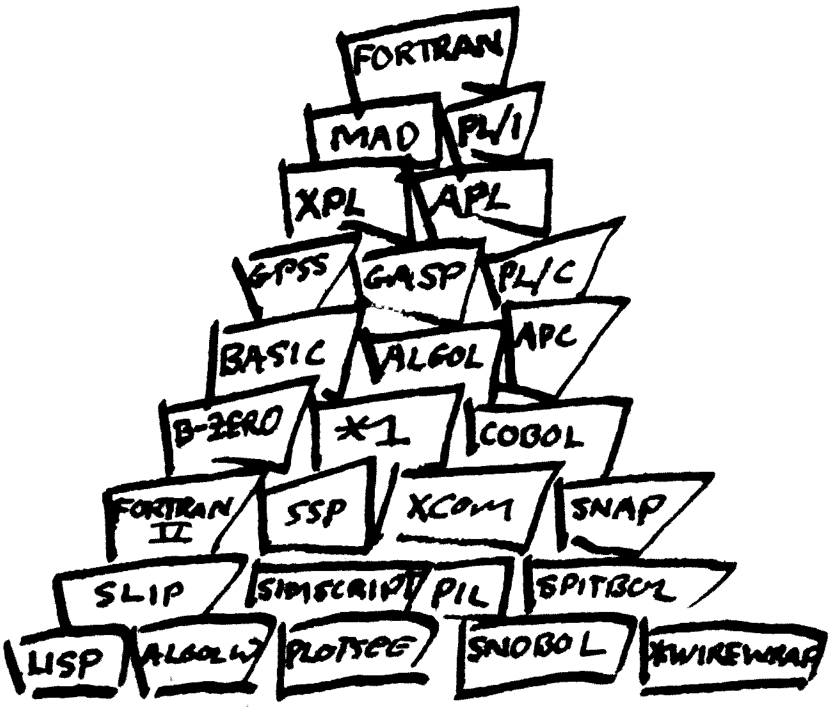

It would be a pain to have to spend a few weeks mastering a new computer language every time you wanted to do something different with a computer – not to mention that you have to buy (or write) a special translating program (called a compiler) for each one – and that can get very expensive (much more than the cost of the computer itself). So let's look at some useful, fairly general purpose languages.

BASIC, which stands for "Beginners' All-purpose Symbolic Instruction Code," was developed at Dartmouth College a number of years back. It was designed for people who knew nothing about computers but who wanted to use them. Few dyed-in-the-wool programmers care much for it, but most non-programmers love it. It's based on algebra, and the non-algebra parts of it are in plain English. For example, to enter two numbers into the machine, multiply them, divide one by the other and print the results, you would write:

```
1 IN A, B
2 LET C = A * B
3 LET D = A / B
4 PRINT C, D
```

(* is the standard symbol for "times" on a computer)

This language has quite a few advantages. It's easy to learn, easy to use, and there are lots of books around which help people learn it. Equally important, there are lots of programs already written and published in it (these are called canned programs), and quite a few computers can use it. In particular, Altair has two (going on three) versions out at the moment, and other microcomputer manufacturers are making noises about supplying it – or so I read. The compiler (remember, that's the program which translates the things you write into the machine's language) doesn't take up too much memory

either, which means that BASIC is suitable for small computer systems where memory is limited. A final advantage is that BASIC is fairly flexible – especially the advanced systems. You can do many if not most of the same things with it as you could do with FORTRAN or PL/1, although the programming effort might be greater.

It does have some disadvantages, though. BASIC has no mnemonic variables. This means that you have to remember that A stands for current, E for voltage and so on. In a more advanced language you could write AMPS, EMF, etc. This isn't so bad if you're working with standardized symbols, but gets to be a disadvantage when you try to remember which was Accounts Payable and which was Accounts Receivable. Also, BASIC is somewhat limited as to what you can do with Input/Output. This only makes a difference if you are working with a big system that gives you lots of choices – it isn't of too much concern for a home computer system or a small business one. Finally, BASIC is structured somewhat along the same lines as FORTRAN, which is the oldest computer language still in use. This means that it does a lot of things in harder more roundabout ways than some of the newer languages, like PL/1. For example, its "either-or" choice is rather cumbersome to write. It's still a great language to play around with, though.

FORTRAN is probably the best known of the various computer languages, partly because it's one of the oldest. The name stands for FORmula TRANslation, and it was developed by IBM back in the early 1950s. It and the B-Zero language developed by Univac were the first high level languages used. No one uses B-Zero today (few have even heard of it), but FORTRAN is probably the most widely used computer language in the United States. Of course, the FORTRAN we use now isn't the same as the FORTRAN introduced back in 1957 – just as the English we speak now isn't the same language as the people in England spoke back in 1066. There have been three official versions of FORTRAN: FORTRAN (the original), FORTRAN II and FORTRAN IV. Number three got lost in the middle somewhere. Most computers these days use FORTRAN IV, although there are some minicomputers around that still use FORTRAN II; some of these compilers might be adaptable to microcomputer use. Anyway, as you might guess from the name of the beast, FORTRAN is basically a scientific computer language; it was developed to make it easier to solve mathematical-type problems for science and engineering. Over the years the language has expanded to the point where it is usable as a general purpose language, so it can do a lot more than simply crunch numbers. Moreover, since it's such a popular language, there are who-knows-how-many programs written (and sometimes published) in it, which makes it much easier to solve a given problem (since you can frequently just type in a canned program). The same structural problems encountered in BASIC are part of FORTRAN, but these have already been covered. Perhaps more important for anyone who wanted to use FORTRAN on a microcomputer, the compiler (remember? the program which translates it into machine language) takes up much more memory than a BASIC compiler, though much less than one for most other high level languages. One keeps hearing hints that one of these days someone may develop a version which is usable on a microcomputer, but I haven't seen any announcements yet.

While FORTRAN was developed for scientific use, COBOL was developed for business use. It's the language used by the U.S. government for a lot of their stuff, so it's got a pretty wide circulation. Needless to say, many businesses use it, too. From the little work I've done with it myself, it seems that you spend most of your time defining what your printout is going to look like and what the information which you feed into the thing is going to look like (the jargon for this is format definition). It also takes lots more memory than one would probably want to pay for in a microcomputer – unless he wanted to do subcontracting for the government.

> BASIC ... was designed for people who know nothing about computers, but who want to use them.

Up until the early 1960s, most computers were either scientific- or business-oriented, and a machine which was designed for one didn't usually work too well for the other. Then IBM started making their general purpose machines, and most other people followed suit. At about the same time, people started to worry about a general purpose computer language. A number were developed, of which my favorite (just for the name) is MAD (Michigan Algorithmic Decoder) which was brought to us by the folks at the University of Michigan Computing Center. Then IBM got into the act, and, lo and behold, out popped PL/1 (Programming Language One). The best description that I can think of is that it was designed to out-fortran FORTRAN and to out-cobol COBOL all at the same time. It does a pretty good job of it, too. I'm always amazed at all of the nice things you can do with PL/1; to use the computerese phrase, it has more bells and whistles (extra options) than you can shake a stick at. Unfortunately, it also uses more memory than you can shake a stick at, which makes it too expensive for microcomputer use (or even timesharing use if you have to watch your costs). But never fear, one of these days we may be seeing a scaled down version of PL/1 (called PL/M) which keeps a lot of the nice features without taking up more memory than most of us mere taxpayers can afford. To give an example of the sort of nice thing the language can do (among others), it lets you write a simple either/or statement (if this is true, do one thing; otherwise do this other thing), whereas to do that in most other languages you have to play hopscotch with the line numbers. In short, PL/1 is a great language, and if a cheap compiler ever comes out, I hope I own the microcomputer it's written for!

Another new language, again by IBM, is APL. I will confess here and now that I've never used it, so what I say is taken from what people who have used it have told me. This is a very powerful language; it can do in one line what most other languages require five or more to do. It

is not yet widely used; unless I'm mistaken (which is quite possible) IBM is the only company which makes compilers for it. It *is*, however, designed for the sort of sit-down-at-your-computer use that most hobby users probably have in mind. And good news! It's available for a microcomputer. The bad news is that said machine is the IBM 5100 and it runs about 10k – and those are kilobucks, not kilobytes. Anyway, the scuttlebutt has it that APL is one of the languages to watch, so keep your eyes peeled.

I mentioned a while back that, in addition to the general purpose languages I've discussed so far, there are quite a few special purpose ones. For a hobby user (or would-be user) these aren't too important, but just to be more or less complete I'll mention a few which are good with which to impress people (besides being good to know about if you tend to be around computer hot dogs who like to talk about such things). There is RPG, which is a Report Generating language, and therefore much used for business and that sort of computing. Then there are several languages used to write simulations. (A simulation is like a computer game except people take it seriously. Come to think of it, I know a couple of people who take the Star Trek game seriously, but we'll ignore that.) These languages are things like GASP, GPSS and so forth. There are a fair number of languages used for crunching words instead of numbers – SNOBOL, SPITBOL and so forth. Finally, there is at least one language used to design electronic circuits – unfortunately all my electrical engineering friends seem to be able to tell me is that it exists and Professor Zilch mentioned it.

FORTRAN ... does things in harder more roundabout ways than some of the newer languages, like PL/1.

As a brief review, one needs some sort of language to give a computer instructions. You can operate on the machine's level (called machine language) and feed it ones and zeros. Or, you can stay on the machine's logical level but use decimal numbers and abbreviated commands. This is called an assembler language, and requires a separate program for translation into machine language. Finally, you can use a combination of human logic and normal words and symbols, which is called a high level language. This requires a program to translate it into machine language again, and such a program is called a compiler. The principal advantages of high level languages are that they are easy to learn, easy to use, and are the same for any machine. They are not nearly so efficient as assembler language from the computer's point of view, but they are much more efficient from our point of view – and that's usually what counts. ■

References

1. *BASIC*, Albrecht, Finkel and Brown. Wiley & Sons, 1973.
2. *Digital Computing, FORTRAN IV, WATFIV, and MTS*, Carnahan and Wilkes. Chemical Engineering Dept., University of Michigan, 1973.
3. *High Speed Data Processing*, Gotlieb & Hume. McGraw-Hill, 1958.

LETTERS

from page 8

you KNOW you have the signal right on the nose.

I'm playing around with a phase shift TTY converter which seems to promise great things. I wonder if you would have any interest? *(Of course . . . Wayne.)*

New subject: mini-computers (micro if the shoe fits). I think one of the great problems facing the would-be computer hobbyists is that the manufacturers, in their ads and more amazingly in their literature, seem to be quite reluctant about two things: one, a simple block diagram showing the necessary basic cards/modules and how they plug together; and two, a simple format of how a program on their machine looks and what the owner has to do to make the thing work. Hiding these things, either on purpose or by oversight, may prevent many would-be's from getting into the act.

I have been fooling around with systems analysis and programing computers for quite a few moons now, particularly as they relate to communications services and facilities, and it seems to me that the manufacturers are missing a good selling tool by not explaining, in English, what's going to happen when he does this and that. None of the literature that I have received (and I've got them all) from any of the manufacturers has given me the slightest clue as to what to expect or indeed what to buy to do such-and-such.

Eugene F. Locke W2SKK
Sea Cliff NY

UPKEEPING

I think you've got the best magazine in ham radio — and hobby electronics in general too, since *EI* went out. Keep up the good work.

Eric Williams
Scotts Valley CA

FAR OUT

I almost had a heart attack today (and I'm only 19). I received my March issue of *73!* None of the other ham magazines has gotten here that quick . . . FAR OUT!!! Keep up the interesting articles. I hope sometime in the future I see articles on building ATV stations and more on microprocessors (I'm getting interested and can use some info).

Bob Billson WA2TXY/AA2TXY
Westfield NJ

SNOBBISH?

I guess you talked me into becoming an amateur. I've been reading *73* for a couple of months now and I finally decided to take the steps necessary to acquire my ticket. Enclosed is $13.95 for a full set of the code tapes. As an amateur, you have a refreshing outlook on the CBer and his or her potential as an amateur recruit. This, in addition to the fine articles in the magazine, is the reason why you got my twenty bucks for a 3 year subscription to *73*.

I have been servicing citizens band and amateur gear for a couple of years now, and the snobbish outlook of amateurs has kept me out of amateur radio until now. There must be more amateurs in this country with your outlook on the CBer, and I have decided to take the time to find some of them.

Thanks for the fine magazine.

Michael L. Aber
Vallejo CA

ILL WINDS

I recently subscribed to your magazine as a result of again becoming interested in ham radio. Although I have been active in years past (formerly W8LST, KR6OX and 5A2TY), I have not been active since my last license expired in 1963.

I just received the March issue and as I was scanning through it, the article, "Inherit the Wind," came to my attention.

The first time I read the author's instructions for building the anemometer, particularly his logic used in calculating the 2.80" radius for locating the 1/8" hole in the disk assembly, I couldn't believe that I was interpreting his logic correctly. After reading it a second time, I concluded that he either goofed in his line of reasoning or he is trying to test for reader response.

He indicates that the 1/8" hole should be drilled in the disk at a distance of 2.8" from the center. The only purpose for the hole, as I see it, is to allow a pulse of light to reach the photoelectric device once per revolution of the disk, and this can be done whether the hole is 2.8" or 2.8 feet (or 100 feet) from the center, as long as the photoelectric device is aligned at the same distance to match the hole when it comes around.

In order to receive one pulse of light per second per mph of wind velocity, it will be necessary to space the cups on the anemometer cup assembly properly from the center of rotation so that the circumference corresponds to the distance that the wind molecules travel in one second at one mph (assuming 100 percent efficiency), and I will accept his calculation of 2.80" for this radius.

Although I haven't built this anemometer, it seems that 2.80" might be a little short to obtain good efficiency. I would suggest therefore, that the radius figure be doubled or tripled to overcome this possible drawback.

Doubling or tripling the radius would of course reduce the revolutions per second by 1/2 or 1/3 respectively. This could be offset by drilling 2 holes or 3 holes, respectively, equally spaced around the disk at whatever radius the builder decided was most desirable. This would still allow the photoelectric device to see one pulse per second per mph of wind velocity.

Gene W. Creighton
Findlay OH

FOREVER GRATEFUL

I am a tolerant ham wife. I don't make plans for Sundays when there are hamfests. I don't complain when I am "widowed" on contest weekends. I have accompanied my husband to several conventions when nobody else could go. I read *73* (at least the "Letters" section — I understand that!!). I even put up with being called an XYL when I'm not really sure whether the *X* means I'm no longer young or no longer a lady! But now I have a request of all of the hams, and as it probably is not unique with me, I feel it bears voicing.

OM, when you come to eyeball with my husband or to work on equipment, please leave your toddlers at home. I will carry coffee or beer to the shack. I will hold wires while you solder. But please, *please* don't ask me to babysit. If I weren't at home, you would be responsible for your child's welfare. You know how impervious you are to your surroundings when you get involved in a project. Would you want your child loose in your shack at such a time? I know your wife deserves a break, but not at my expense. So I promise you, I won't let my husband bring our child to your house if you don't bring yours to my house. Give your wife her break some other time, and I will be forever grateful.

The X-babysitter
(Name and address submitted)

ADS TOO, DREAMS (?)

Mahalo, keep up the good work. I look for the *73* for days before it arrives, and it disturbs my sleeping habits until I read it cover to cover (ads too, dreams).

Everett W. Curry, Jr.
K6VGL/KH6
Honolulu HI

THE METRIC SCOOP

Why don't you scoop *QST* by being the first to go the metric paper size? Eventually, why not now?

Ken Lewis WA4QHZ
Albany GA

Excellent idea! Behold . . . 73 *Magazine, the first of the 21 x 27.5 cm magazines! — Wayne.*

EERIE

Thank you for the special surplus section in your March issue. To a "surplus hound" like me it was interesting reading. Keep it up!

J. K. Bach, who wrote the article titled, "Adventure," might be interested in some information concerning the calculator he bought. He has a *Lloyds Accumath*® *60*. It sold for about $60 to $85 new and was discontinued two years ago. The unit was built by North American Rockwell (this is where I came in contact with it) and probably assembled in Mexico. Readers who have this calculator *might* be able to obtain replacement parts by writing Lloyds' service department located in Compton, California. I must say it is an eerie feeling to read about a product you have worked with since its design stages described by someone with pinpoint accuracy who doesn't know what he has!!!

Gary McClellan
Project Engineer
Gary Electronics Co.
La Habra CA

WORTH A TRY

The following is a little tip that I've "re-invented" and which might be of some interest to your readers. At first I was somewhat puzzled by the occasional "zeroing" of my digital LED wristwatch for no apparent reason. I thought about intermittent internal connections (ugh), strong rf fields, etc., but then finally narrowed it down to simply a static charge build-up on the red plastic faceplate of the watch itself. Going back through my memory bank, I remembered the sure-fire cure for static build-up on plastic meter faces used by hams all over for the last dozen or so years and my problem was solved. In case you've forgotten, the cure involves merely placing a couple of drops of liquid detergent (Ivory in my case) on the faceplate, spreading it around with a finger-tip, letting it stand for a minute or so, and finally wiping the bulk of the detergent off. A thin film of detergent seems to remain behind to protect against further build-up for some time, but it is a good idea to re-coat the faceplate every couple of weeks, especially during the cold, dry winter months. No one can guarantee that this pro-

cedure will work for all digital watches, but it certainly is worth a try before packing it off to the manufacturer for repair.

David F. Miller K9POX

CREDIT LIMARC

At a hobby exposition on Sunday afternoon, January 25th, sponsored by the Plainedge Public Library in Massapequa, N.Y., members of the LIMARC ATV technical group gave an on-the-air demonstration of amateur television two-way transmission between W2WLS/2 and W2NIP. Amateur color TV transmissions were also demonstrated as was a complete solid state ATV transmitter developed by W2TRP. Other participating ATVers were WA2APJ, W2ZUC, WA2FHF and W2KPQ.

Also shown were exhibits of slow scan TV, repeater operation, and an exhibit of a precision radio controlled boat built by WB2AQM.

K2QPF, emergency coordinator for the town of Oyster Bay, demonstrated traffic handling during the simulated emergency test on this date. Other groups who joined in with exhibits were the Wantagh Radio Club, the Farmingdale Radio Club and the Long Island DX Association represented by WA2BVU and W2AWK. Amateur radio in the scouting movement was ably handled by WB2YYV. Outside the library a mobile van containing an "Oscar" satellite terminal was manned and demonstrated by K2REC and WB2AMX.

The show was very well attended by many people who were drawn in by newspaper, cable TV and word of mouth advertising over local repeaters.

K2LIO, LIMARC president, and WA2WKV, who organized the event for LIMARC, feel that cooperative effort by many radio groups such as this can bring much positive interest and credit to the amateur radio image.

Ed Piller W2KPQ
LIMARC

THE WHITE HOUSE?

Just a short note to compliment you on the mag. Arrival of *73* is the high point of my month. Unlike all other mags, every article in *73* is usually of interest to me rather than just 5 pages or so out of 150 pages. I am fairly knowledgeable in the field but I can't make heads or tails out of most of the stuff in *QST* and the others. Too bad *Hotline* went west — *HR Report* is really playing it up big in their ads.

It sounds like the gang at *73* really swings. You talk about things up there a lot and it has aroused the curiosity of myself and probably lots of others. How about a piece in *73* with pictures of the gang, pix of the *73* bldg, antennas, rigs, surrounding countryside, etc? We all would be very interested in this — sort of like a tour of the White House or something.

Well — thanx for the consideration. Maybe one man's opinion might be worth something. Really enjoy *73* — Star Trek communicators and all that.

Steve Uhrig WA3SWS
Columbia MD

UNLOCKING PLL'S

I wish to bring to the attention of Dr. Thomas A. Reilly and Calvin McCarthy, and any interested readers, that the book *Phase Locked Loop Systems*, published by Motorola and reviewed in the Nov/Dec 1975 issue of *73* under the heading "For Your Eyes Only," is no longer available.

Immediately after reading the review I sent off a check to Motorola for a copy of this book. I was extremely disappointed today to have it returned with a note that it is no longer available. For some time now I have been trying to obtain a book dealing with PLLs, but so far without success. If there are any readers/hams out there who may have a copy of this book and are prepared to part with it, please let me know for how much and I will remit the necessary amount. I would also appreciate knowing of any other publications dealing with PLLs that may be available.

Finally, let me compliment WØACR on his really great scope article titled "Eyes for Your Shack" in the same issue. It was really quite an achievement and a number of friends in this part of the world are considering duplicating it either in part or in its entirety.

John C. Webster VP2DN
62, Milner Hall
University of the W.I.
St. Augustine
Trinidad W.I.

SEA W

I thought I'd drop you another line on the status of CW in the U.S. Army. Just last year, the required level of proficiency for all CW radio operators (except for high speed *intercept* operators) dropped from 15 wpm to 10 wpm. It looks like in this day of microwave, troposcatter, and satellite communications, the need for HF communications (which is about the only place CW has a real advantage) is diminishing rapidly.

In contrast, my unit (Special Forces, or the "Green Berets"), who use HF almost exclusively, has upped

Continued on page 100

Ed Piller W2KPQ, LIMARC ATV Chairman, discussing ATV details with Leo Staschover, president of North Hills Electronics Corp. WA2FHF is in foreground left and WB2DJK is in background right.

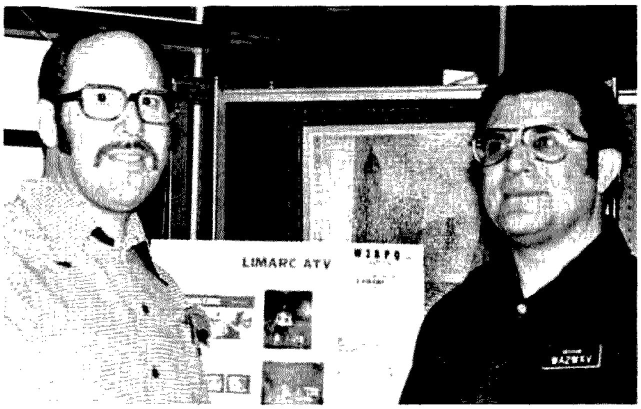

Phil Bettan K2LIO, LIMARC president, and George Gluck WA2WKV, LIMARC exhibit chairman. LIMARC ATV poster in background.

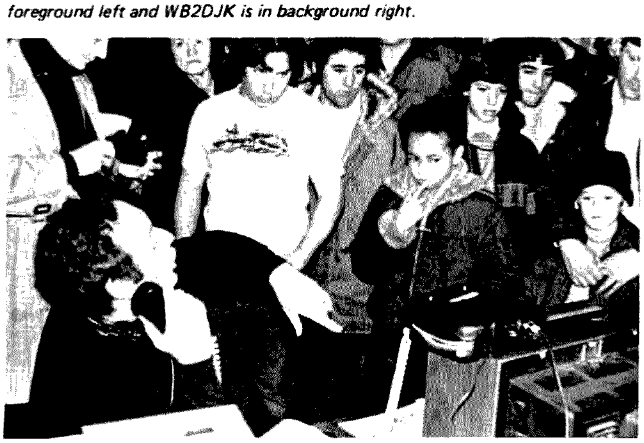

Jay Rosenzweig WA2APJ, LIMARC vice president, demonstrates live ATV link.

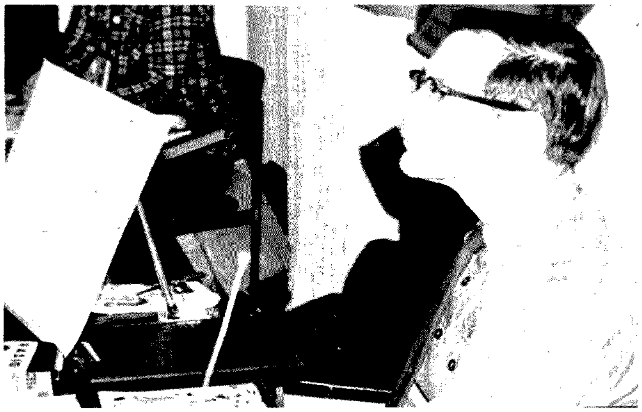

Scoutmaster Larry Weil WB2YYV mans the "Ham Radio in Scouting" exhibit at the LIMARC showing.

Dick Whipple
305 Clemson Drive
Tyler TX 75701

and

John Arnold W5CUD
RFD 4, Box 52-A
Tyler TX 75701

A Very Cheap I/O -- the Model 15

Contrary to the opinion expressed often in computer hobbyist publications, *Baudot is not dead!* It is alive and well, especially in Tyler, Texas! Frankly, I am glad I learned years ago not to believe everything I find in print. If I had, my Model 15 Teletype® would not be speaking BASIC today. I want to make it clear at the outset that this article is not intended to foster a Baudot/ASCII split among computer hobbyists. Nor is it written to argue the relative merits of one system over the other. I wish simply to demonstrate that a Baudot machine can be made an effective and useful hard copy peripheral in a hobby computer system.

Permit me to digress a moment from the main subject – Baudot – to comment in a more general way on these people we call "hobbyists." Although they come in many different varieties depending on interest and ability, there seems to be a common thread running between them: the need to be creative with their hands, heads, or both. For instance, there can be no greater pleasure for an electronic hobbyist than to sit back and watch his junk box creation perform like its "store bought" counterpart. At that moment he feels a sense of accomplishment unobtainable in many other pursuits of life. This "make do with what you have" philosophy is a reflection of the spirit that has brought man to his stately position among the world's lesser creatures. The hobbyist has the opportunity to foster this spirit each time he digs into his junk box for a new project. Unless you think I am only talking about an electronic junk box, let me remind you that a 16K word memory filled with NOPs is in a sense a junk box as well!

What does all this philosophical wandering have to do with Baudot? Simply this: There are people who say Baudot is obsolete and Teletypes that speak it are junk. Now, can't you see the eyes of some hobbyist light up when the word "junk" is mentioned? The very word carries with it a challenge he cannot resist. Out to the storeroom he goes to retrieve his old Model 15. The renewing of the hobbyist spirit has begun! There he goes . . . Watch him . . . Next stop Baudot BASIC!

About six months ago, a friend and I were taking just such a challenge. We have made quite a lot of progress since then. In our present state of excitement we want to share some of the knowledge gained and lessons learned. We hope our success will encourage some "junk box digging" by readers of *73.*

Getting Started

The best place to begin is in the pages of a book on Baudot Teletypes. One good choice is Wayne Green's *RTTY Handbook* (Tab Books). Learn the theory of teleprinter operation and become familiar with the different machines available.

Next, begin your search for a machine. This will probably require some footwork and a little time. If you live close to a large city start

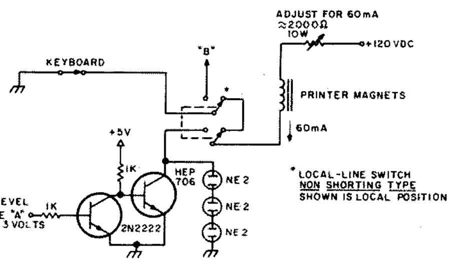

Fig. 1. Teletype interface circuit: Model 15 or similar.

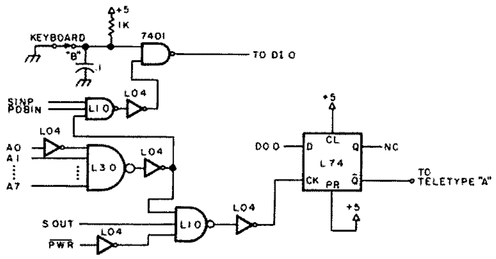

Fig. 2. Computer interface for software I/O. Labels reflect Altair 8800 bus. Points A and B refer to Fig. 1. All ICs are 7400 series – low power except 7401.

TELETYPE SPEED	PRESET COUNT 11	10	9	8	7	6	5	4	3	2	1	0
60 wpm	0	1	0	1	0	1	0	0	0	1	1	0
65 wpm	0	1	1	0	0	0	0	1	1	0	1	0
75 wpm	0	1	1	1	0	1	1	0	1	1	0	0
100 wpm	1	0	0	1	1	0	0	1	0	0	1	0

Table 1. Baud rate set up for Baudot Teletypes on Altair 8800 serial I/O boards.

by looking in the yellow pages under junk dealers and electronic surplus houses. Make a few phone calls, ask questions, and follow leads. There are mail order companies that have teleprinter equipment. Check the back pages and classified ads of amateur and computer hobbyist magazines. Write a few inquiries and get quotations – ask for the specific machine you want. Get in touch with local radio amateurs and see if they can help. Hams generally have a good attitude toward hobbyists of other persuasions and go out of their way to help. You might find a ham with a spare Teletype that he would be willing to loan out until you can get your own.

Give Western Union and Bell Telephone a call. If you can get through to the right people you may have a chance of getting a free machine. I have heard of this approach yielding success more than once. In these inquiries be sure to emphasize the "hobby" nature of your interest! Above all don't get disappointed and give up too soon. There are thousands of these machines out there – probably one with *your* name on it!

The Care and Feeding of a Model 15 (or Similar)

As the owner of a Baudot Teletype you should take some pride in your new possession. Over the years the Model 15 Teletype has gained an excellent reputation among people who appreciate well-engineered mechanical devices. Most of its moving parts are made of case-hardened steel. When a part does wear there is generally an adjustment somewhere to take up the slack. If you can find a maintenance manual, get it and use it. Your efforts will pay off in many years of reliable service. I have often heard Model 15 owners say not to worry with cleaning the working parts – the worse it looks the smoother it operates. A friend has a Model 15 with several more layers of dirt and grease than mine. Not only does his keyboard have a lighter touch but his printer is several decibels quieter! Remember to keep machine oil in the cups and on the clutch felts. With reasonable care your machine should serve you well for years to come.

The Interfacing Problem: At the Teletype End

Normally the Teletype will have two connecting cables: one for send (the keyboard) and the other for receive (printer magnet). For testing

LABEL	OCTAL ADDRESS	OCTAL CODE	MNEMONIC	COMMENTS
INPUT	Low- 000	001	LXI B	ZERO C; COUNT IN B
	001	000		
	002	005		
LOOP1	003	333	IN	LOOK FOR START PULSE
	004	376		
	005	037	RAR	
	006	332	JPC	JUMP BACK IF NO START
	007	003	LOOP1(L)	
	010	000	LOOP1(H)	
	011	026	MUI D	SET FOR 1½ TIME UNITS
	012	030		
	013	315	CAL	CALL TIME OUT ROUTINE
	014	110	TMOUT(L)	
	015	000	TMOUT(H)	
LOOP2	016	333	IN	COLLECT S DATA PULSES INTO C
	017	376		
	020	037	RAR	
	021	171	MOV A, C	
	022	037	RAR	
	023	117	MOV C, A	SAVE A
	024	026	MUI D	SET FOR 1 TIME UNIT
	025	020		
	026	315	CAL	CALL TIME OUT ROUTINE
	027	110	TMOUT(L)	
	030	000	TMOUT(H)	
	031	005	OCR B	CHECK COUNT
	032	302	JNZ	JUMP BACK IF NOT FINISHED
	033	016	LOOP2IL)	
	034	000	LOOP2IHI	
	036	171	MOV A, C	RETRIEVE A
	036	017	RRC	ADJUST A TO PLACE BAUDOT IN
	037	017	RRC	LOWER 5 BITS
	040	017	RRC	
	041	311	RET	END INPUT ROUTINE
OUTPUT	042	006	MUI B	COUNT IN B
	043	005		
	044	007	RLC	
	045	117	MOV C, A	SAVE A
	046	227	SUB A	CLEAR A
	047	323	OUT	OUTPUT START PULSE
	050	376		
	051	026	MUI D	SET FOR 1 TIME UNIT
	062	020		
	053	315	CAL	CALL TIME OUT ROUTINE
	064	110	TMOUT(L)	
	055	000	TMOUT(H)	
LOOP3	056	171	MOV A, C	
	057	017	RRC	
	060	117	MOV C, A	
	061	346	ANI	MASK OFF ALL BUT Ø BIT
	062	001		
	063	323	OUT	OUTPUT DATA PULSES - 5 IN ALL
	064	376		
	066	026	MUI O	SET FOR 1 TIME UNIT
	066	020		
	067	315	CAL	CALL TIME OUT ROUTINE
	070	110	TMOUT(L)	
	071	000	TMOUT(H)	
	072	006	OCR B	CHECK COUNT
	073	302	JNZ	JUMP BACK IF NOT FINISHED
	074	056	LOOP3IL)	
	075	000	LOOP3(H)	
	076	076	MUI A	
	077	001		
	100	323	OUT	OUTPUT STOP PULSE
	101	376		
	102	026	MUI D	SET FOR 1½ TIME UNITS
	103	030		
	104	315	CAL	CALL TIME OUT ROUTINE
	105	110	TMOUT(L)	
	106	000	TMOUT(H)	
	107	311	RET	
TMOUT	110	076	MUI A	ADJUST TIME DELAY
	111	XXX		170_8 for 50 wpm; 135 for 75 wpm
LOOP4	112	075	DRC A	(MITS STATIC MEMORY TESTED VALUES)
	113	302	JNZ	JUMP BACK IF NOT FINISHED
	114	112	LOOP4(L)	
	115	000	LOOP4(H)	
	116	025	DCR D	
	117	302	JNZ	JUMP BACK IF NOT FINISHEO
	120	110	TMOUT(L)	
	121	000	TMOUT(H)	
	122	311	RET	

Fig. 2(a). Serial I/O: Software technique for Fig. 2.

purposes the two can be series-connected with a power supply and current limiting resistor. Connected in this way the machine will type to itself. Teletype users call this "local loop" operation. For computer use the send and receive cables must be connected separately. Fig. 1 shows a transistorized switching circuit that provides the necessary TTL level signals for a computer interface.

The following notes refer to Fig. 1:

1. The use of a high voltage supply (100 to 120 volts) is recommended since it provides the simplest and most reliable operation. Of course, the driver transistor *must* be a high voltage type similar to the one shown.
2. Make certain that the local-line switch is a *non-shorting* (break-before-make) type. 120 volts is not a TTL level! A telephone type lever switch is ideal.
3. The printer magnets (usually there are two mounted side by side) can be connected in series or parallel. The circuit shown assumes a parallel connection. Adjust the slide on the power resistor for 60 mA in the magnet circuit.
4. Notice that in the local position the keyboard contacts are switching the full 60 mA at 120 volts. The contact arcing seems to do wonders for cleaning up noise problems in the keyboard. In the line position, the keyboard is switching to ground and the printer will accept TTL logic levels.
5. Make *absolutely* certain that the Teletype and all computer circuits share a good ground system. In fact, connect the Teletype chassis to the computer ground with a separate heavy wire. We have experienced ac transients on interface lines when the ground connection on the Teletype was inadvertently broken. On one occasion we lost some TTL in our Altair during such an occurrence.

LOWER CASE	5 LEVEL	6 LEVEL	UPPER CASE	5 LEVEL	6 LEVEL
A	003	003	–	003	043
B	031	031	?	031	071
C	016	016	:	016	056
D	011	011	$	011	051
E	001	001	3	001	041
F	015	015	!	015	055
G	032	032	&	032	072
H	024	024	#	024	064
I	006	006	8	006	046
J	013	013	Bell	013	053
K	017	017	(	017	057
L	022	022	)	022	062
M	034	034	.	034	074
N	014	014	,	014	054
O	030	030	9	030	070
P	026	026	0	026	066
Q	027	027	1	027	067
R	012	012	4	012	052
S	005	005	'	005	045
T	020	020	5	020	060
U	007	007	7	007	047
V	036	036	;	036	076
W	023	023	2	023	063
X	035	035	/	035	075
Y	025	025	6	025	065
Z	021	021	"	021	061
CR	010	010	CR	010	050
LF	002	002	LF	002	042
SP	004	004	SP	004	044
BLNK	000	000	BLNK	000	040
FGS	033	033	FGS	033	073
LTR	037	037	LTR	037	077

Table 2. Baudot-octal conversion.

The Interfacing Problem: At the Computer End

There are several schemes available to perform the serial input/output function at the computer. A UART (Universal Asynchronous Receiver Transmitter) is readily adaptable to five level Baudot code. The UART represents a hardware solution to the problem. The serial/parallel conversion can also be handled by computer software. This simplifies the hardware requirement but ties up the CPU during input/output operation. The circuit in Fig. 2 and the accompanying software listing will illustrate this latter technique as applied in an Altair 8800 system.

Although the software I/O system is probably not a good long-term solution to your I/O needs, it does offer a quick and simple approach to getting your Teletype on-line. Fig. 2 is very similar to the interface circuitry necessary for a cassette interface of the Suding type. If you later change your I/O to a UART type, you can use this circuit to build up a cassette interface.

To check out the software I/O, make the following test:

1. At a memory location above the I/O routines, load a main program similar to:

```
        LXI SP, LOOP + 10
LOOP    CALL INPUT
        CALL OUTPUT
        JMP LOOP
```

2. EXAMINE the starting location of the main program and begin execution.
3. The printer should now echo keyboard entries.

In our Altair 8800 system we have used several home brew I/O interfaces with success. Our original circuit followed in design the "Basic Stunt Box" on page 299 of *RTTY Handbook*. This circuit was modified and improved through several generations. Most recently we have used a MITS SIOC interface board with a few simple modifications (see below). The MITS board is UART-based, with a software controlled interrupt scheme we have found very useful. Processor Technology's board is currently being used by Frank Corlett WA5BNK with his Altair 8800 and a Model 28. After a great deal of experimenting, we have little doubt that a UART-based I/O interface is best.

The MITS SIOC board was originally intended for use

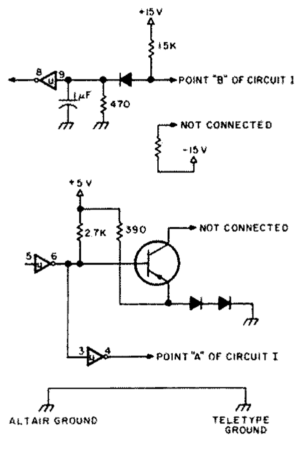

Fig. 3. Teletype drive circuits for MITS SIOC interface with modification for connection to a Model 15 Teletype.

with a Model 33 Teletype. To use it with a Model 15 or similar machine, make the modifications shown in Fig. 3.

In preparing the MITS board, the number of stop bits must be selected. The five level Baudot code consists of a start, stop and five coded data pulses. The start and data pulses are 22 ms each (60 word per minute machines) while the stop is 31 ms, about 1½ times the others. Theoretically, the stop pulse generated by the serial I/O circuit should be 1½ times the length of the start and data pulses. The MITS SIOC board has provision for 1 or 2 stop pulses only. Our experience has shown that both choices work satisfactorily. One stop pulse types a little faster than normal, 2 stop pulses a little slower. We have used the 1 stop bit set up for some time without any problems. A UART is available that provides the correct 1½ stop bits but we don't believe you need to be too concerned about getting one.

As you implement a Baudot system, knowledge of the Baud rate will be required. For instance, the MITS serial board instructions do not provide directly the Baud rate hookup for a 60 wpm Baudot machine. After a little head scratching we were able to figure out the circuit connections. For those contemplating a MITS board, Table 1 gives the necessary data for strapping the Baud rate counters. If you purchase some other I/O board, be sure to ask the manufacturer for details on setting the Baud rate for your Baudot machine. By the way, not all Baudot machines are 60 wpm. Some are 65 and 75 wpm. Gear sets are available from surplus dealers to change speeds. Model 15s work well at 75 wpm. Model 28s are 100 wpm standard.

How Does Baudot Look in the Computer?

The answer to this question depends upon the configuration of the interface system. Consider, for instance, a typical keyboard entry to the CPU accumulator. The normally closed keyboard contacts can produce a logic 0 or a logic 1 depending on the number of inversions that take place in the I/O interface. In addition, the interface circuit will determine the location and order of the five level code in the eight bit accumulator. As an example, consider the letter T as it might finally appear in the accumulator:

[T] * 020 001 017 036

These examples assume the lower five bits of the accumulator are used. A choice must be made from this group if standardization is to be achieved. After consulting a few sources, 020 appeared the best representation. The MITS and Processor Technology boards produce this representation. Table 2 presents the full Baudot character set as it would appear in octal notation.

For those not familiar with the Model 15s, upper or lower case is set by FGS or LTR keystroke respectively. A mechanical flip flop holds the case until another FGS or LTR keystroke produces a change. It is convenient in some systems to use a sixth bit to indicate which case is desired or the status of the machine. With the sixth bit, software can be written to control the FGS/LTR function. This relieves some of the difficulties encountered in keeping track of the case. An example will be presented subsequently. ■

---

*This bracket set will be used to mean the octal value of a five level Baudot character.

Louis I. Hutton K7YZZ
12235 SE 62nd Street
Bellevue WA 98006

Code Converter Using PROMs

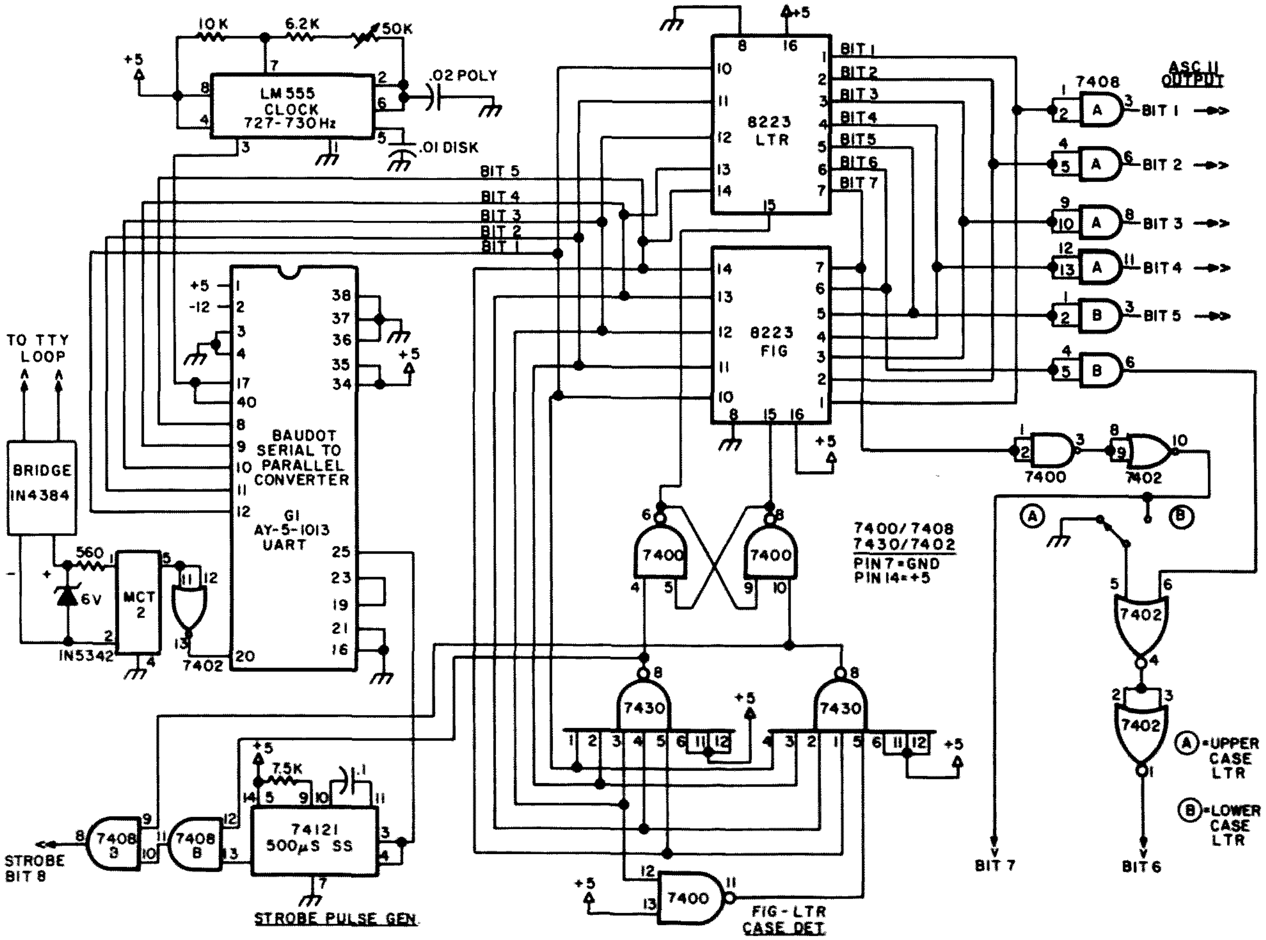

Fig. 1. Schematic.

Several amateur builders have advised me that they have had difficulty in obtaining the National 5220 BL/N code converter used in the RTTY TVT* unit. It seems that the supply houses do not want to sell them in single quantities, but only in three at a time. This makes the cost much too high and one is left with the problem of what to do with the extra chips.

Since it seemed that this was going to be a big problem in duplicating this circuit, I decided to redesign the circuit around a chip that is available in quantity and at a much lower cost. The 5220 BL/N costs almost $20 each, whereas the 8223 PROM surplus cost is around $3.00 each. The parts count was also reduced during the redesign. The 8223 PROM may be found in several surplus advertisements in *73 Magazine*.

The 8223 PROM must be programmed to do the code conversion. Several articles on PROM programmers were studied and the unit shown in the drawings was built in one evening. This code conversion provides all the Figures and Letters found on the Model 28 keyboard.

Circuit Description

The circuit is essentially the same as that used in the original RTTY TVT, but the 5220 BL/N has been replaced by two 8223 PROMs. DC pulses from the TTY loop are coupled to the UART through an optical isolator and inverter. The parallel output of the UART is connected to the 7430 FIG-LTR case detector and to the input of the two 8223 PROMs. The outputs of the PROMs are paralleled and connected to a buffer for output isolation. The upper and lower case letters feature was retained for use by the video readout circuit. The two 7430s are wired to recognize the FIG or LTR Baudot code and to trigger the 7400 FF causing a high to appear on pin 15 of the selected 8223. If the LTR key is struck, a high will appear on pin 15 of the LTR 8223 and a low will appear on pin 15 of the FIG 8223. The strobe pulse on the output of the strobe SS will also be inhibited. The Carriage Return, Line Feed, and Stop keys are programmed by the PROMs to present a blank signal to the TV video readout unit. The builder will also note that I have deleted the ROM input buffer and all pull up resistors.

Construction

The new code conversion board is the same size as the old one (4¼ by 6 inches). A layout of the board's major components and schematic are provided. A diagram of the programmer I built along with a layout of the front panel is also provided. The program for the 8223 when used in this code conversion unit is shown in Table 1.

I used point to point wiring for the circuit board. The pin connections on the connector were the same for both the old and new boards so I could check out my circuits with the least amount of fuss. I wired up the clock first and checked it for proper operation and adjusted it to the proper frequency for 60 speed operation. I then wired the input circuit to the UART and con-

*73, March 1976.

Fig. 3. Programming unit for 8223 PROM.

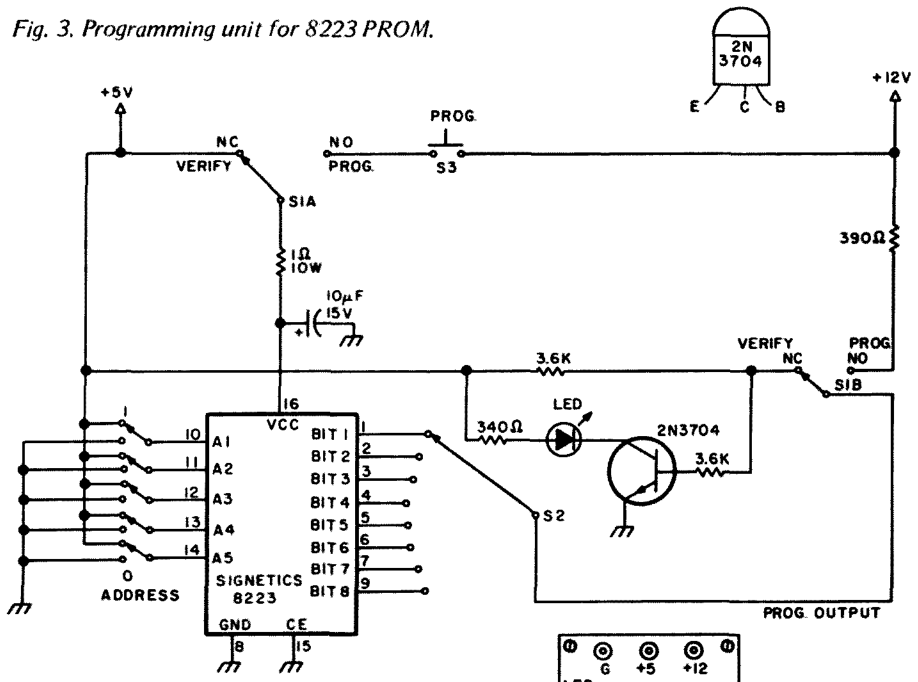

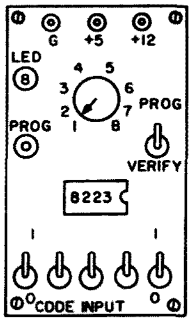

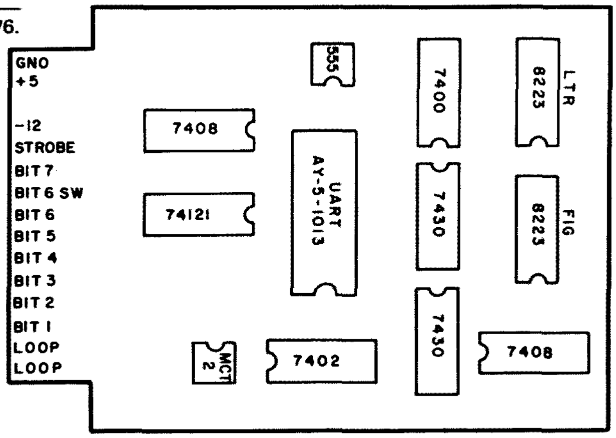

Fig. 2. Parts layout.

LETTERS PROM

SYMBOL	BAUDOT B1	B2	B3	B4	B5	LTR PROM Pin 15 State B6	ASCII B1	B2	B3	B4	B5	B6	B7
A	1	1	0	0	0	1	1	0	0	0	0	0	1
B	1	0	0	1	1	1	0	1	0	0	0	0	1
C	0	1	1	1	0	1	1	1	0	0	0	0	1
D	1	0	0	1	0	1	0	0	1	0	0	0	1
E	1	0	0	0	0	1	1	0	1	0	0	0	1
F	1	0	1	1	0	1	0	1	1	0	0	0	1
G	0	1	0	1	1	1	1	1	1	0	0	0	1
H	0	0	1	0	1	1	0	0	0	1	0	0	1
I	0	1	1	0	0	1	1	0	0	1	0	0	1
J	1	1	0	1	0	1	0	1	0	1	0	0	1
K	1	1	1	1	0	1	1	1	0	1	0	0	1
L	0	1	0	0	1	1	0	0	1	1	0	0	1
M	0	0	1	1	1	1	1	0	1	1	0	0	1
N	0	0	1	1	0	1	0	1	1	1	0	0	1
O	0	0	0	1	1	1	1	1	1	1	0	0	1
P	0	1	1	0	1	1	0	0	0	0	1	0	1
Q	1	1	1	0	1	1	1	0	0	0	1	0	1
R	0	1	0	1	0	1	0	1	0	0	1	0	1
S	1	0	1	0	0	1	1	1	0	0	1	0	1
T	0	0	0	0	1	1	0	0	1	0	1	0	1
U	1	1	1	0	0	1	1	0	1	0	1	0	1
V	0	1	1	1	1	1	0	1	1	0	1	0	1
W	1	1	0	0	1	1	1	1	1	0	1	0	1
X	1	0	1	1	1	1	0	0	0	1	1	0	1
Y	1	0	1	0	1	1	1	0	0	1	1	0	1
Z	1	0	0	0	1	1	0	1	0	1	1	0	1
FIG													
LTR	1	1	1	1	1	1	0	0	0	0	0	1	0
CR	0	0	0	1	0	1	0	0	0	0	0	1	0
LF	0	1	0	0	0	1	0	0	0	0	0	1	0
SPACE	0	0	1	0	0	1	0	0	0	0	0	1	0

FIGURES PROM

SYMBOL	BAUDOT B1	B2	B3	B4	B5	FIG PROM Pin 15 State B6	ASCII B1	B2	B3	B4	B5	B6	B7
1	1	1	1	0	1	0	1	0	0	0	1	1	0
2	1	1	0	0	1	0	0	1	0	0	1	1	0
3	1	0	0	0	0	0	1	1	0	0	1	1	0
4	0	1	0	1	0	0	0	0	1	0	1	1	0
5	0	0	0	0	1	0	1	0	1	0	1	1	0
6	1	0	1	0	1	0	0	1	1	0	1	1	0
7	1	1	1	0	0	0	1	1	1	0	1	1	0
8	0	1	1	0	0	0	0	0	0	1	1	1	0
9	0	0	0	1	1	0	1	0	0	1	1	1	0
Ø	0	1	1	0	1	0	0	0	0	0	1	1	0
●	0	0	1	1	1	0	0	1	1	1	0	1	0
,	0	0	1	1	0	0	0	0	1	1	0	1	0
(	1	1	1	1	0	0	0	0	0	1	0	1	0
)	0	1	0	0	1	0	1	0	0	1	0	1	0
?	1	0	0	1	1	0	1	1	1	1	1	1	0
/	1	0	1	1	1	0	1	1	1	1	0	1	0
:	0	1	1	1	0	0	0	1	0	1	1	1	0
;	0	1	1	1	1	0	1	1	0	1	1	1	0
!	1	0	1	1	0	0	1	0	0	0	0	1	0
"	1	0	0	0	1	0	0	1	0	0	0	1	0
'	1	1	0	1	0	0	1	1	1	0	0	1	0
&	0	1	0	1	1	0	0	1	1	0	0	1	0
$	1	0	0	1	0	0	0	0	1	0	0	1	0
STOP	0	0	1	0	1	0	0	0	0	0	0	1	0
—	1	1	0	0	0	0	1	0	1	1	0	1	0
BELL	1	0	1	0	0	0	0	1	1	0	1	0	0
FIG	1	1	0	1	1	0	0	0	0	0	0	1	0
LTR													
CR	0	0	0	1	0	0	0	0	0	0	0	1	0
LF	0	1	0	0	0	0	0	0	0	0	0	1	0
SPACE	0	0	1	0	0	0	0	0	0	0	0	1	0

Table 1. Code conversion table for programming the 8223 PROM in the Baudot to ASCII RTTY TVT.

nected the bridge into the TTY loop circuit. A check was made to assure that the parallel Baudot output code was appearing properly on pins 8 through 12 on the UART. The Strobe Pulse Generator was wired next and again checked to be sure that the 500 microsecond pulse was being generated when a key was depressed on the keyboard. The FIG/LTR case detector was then wired and a circuit check was made to confirm that pins 6 and 8 of the 7400 FF changed state when the FIG and LTR keys were depressed on the keyboard. Then the final wiring was made on the 8223s and the output buffers. The board was again plugged into the system and a check of all letters and figures was made to be sure that the PROMs were correctly coded. It all worked just as planned.

The PROMs have been programmed so that the RTTY TVT screen does not print any Greek alphabet garbage when the CR, LF and other selected non-wanted characters are struck. On the old preprogrammed 5220 BL/N you had a few Greek characters show up every time the FIG, LTR, Bell, or STOP characters were received or transmitted. When you do your own programming, you can prepare it so that this does not happen. Another blow for those who build their own gear.

This new version of the RTTY TVT code converter board should enable the builder to fabricate his unit with much less fuss over trying to locate hard-to-get components and in the process reduce the cost of the unit. ■

References

"K2OAW Synthesizer PROM-oted," Wm. J. Hosking W7JSW, *73 Magazine,* November/December, 1975.

"A Versatile Read Only Memory Programmer," Peter Helmers, *BYTE Magazine,* November, 1975.

73 Magazine *Staff*

A Nifty Cassette - Computer System

The most practical and economical way to store programs and large quantities of data for small computer systems is with the common tape cassette recorder. Cheap and plentiful, audio-type cassette equipment is capable of storing several times the amount of data that an equivalent volume of paper tape can hold, with the added benefits of erasability and easier operation. Floppy disks may be faster, but are beyond the price range of most hobbyists.

While computer manufacturers and software houses have long been supplying their programs on audio cassettes, there has been a major problem with compatibility. Every manufacturer has had his own pet system of recording, and a tape recorded for use with one brand of computer is utter gibberish to another brand of computer. For this reason, several manufacturers decided to adopt a standard system of tape interfacing.

The proposed standard, as implemented by Pronetics Corp., calls for a frequency-shift keying standard not entirely dissimilar to that used for RTTY, but with several crucial differences. The two tones to be recorded are ideally to be square waves, with Mark (logic 1) to be 2400 Hz, and Space (logic 0) to be 1200 Hz. With a standard tape exchange speed of 300 baud (bits per second), Mark would consist of eight cycles, Space of four. This could be divided to 600 or 1200 baud, in which case one cycle would be a space (1/1200 sec). Higher density would be impractical. For comparison, 300 baud corresponds roughly to 30 characters per second.

Within each character, the first recorded tone should consist of a Space (start) bit, followed by eight data bits (least significant bit first, parity last) and two Mark (stop) bits. All undefined bits, as well as the interval between characters, would be Mark (2400 Hz).

This system has several beneficial features. It is self-clocking. The first bit of any character is Space and must follow the Mark tone that ends previous characters and exists between characters. It is possible to tolerate as much as a 30% speed variation with this system, which can be an important factor with inexpensive tape equipment.

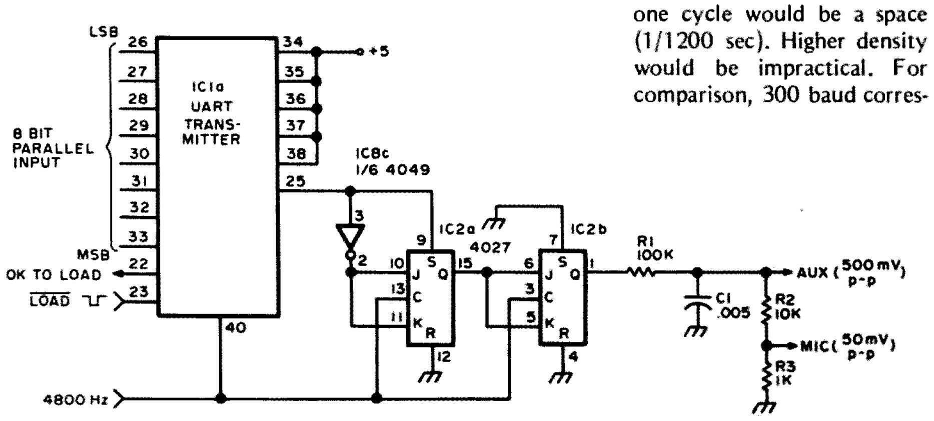

Fig. 1. Cassette digital modulator. This circuit converts 8-bit parallel input data to a series of 2400 and 1200 Hz tones for recording on cassette tape.

Do I Need a Good Recorder?

Almost any cassette recorder can be used for data storage using this FSK standard system. But for convenience and accuracy, there are a few criteria for selection that differ from hi-fi quality.

You want a clean, reliable machine. Dirty heads and mechanism can spoil data very easily. If you don't have a cassette recorder already, a used model is adequate, but it shouldn't show signs of mistreatment. It should also have capstan drive — a few miniature units don't.

A digital tape counter is also a great convenience. Without one, identifying programs on a tape can be difficult, and could lead to accidental erasures. These are found on many hi-fi type machines, and occasionally on portable units.

An important electrical feature is ac bias/erase. Some recorders, and most of the under-$100 category, use dc for erasing and record biasing. This results in higher noise and less frequency response. While frequency response is not as critical with this system as with music recording, it still helps to have a good clean treble response, which can help preserve the square wave shape. Low noise means fewer errors, so a high signal-to-noise ratio aids reliability.

Stereophonic capability is unnecessary. If you have a stereo recorder, be sure to record both tracks simultaneously, and bulk erase the tape before using it.

Your tape recorder must have an auxiliary or microphone input jack, as well as an earphone or line output. Acoustic coupling is unsatisfactory. The choice of levels can be performed in the computer interface circuitry, so either mike, line, or speaker levels can be used.

In a meeting organized by the staff of 73 Magazine, the microcomputer industry accepted this cassette system as the industry standard.

What About Tape?

While the choice of tape recorder is uncritical, the tape itself is the weak link in the chain. Do not skimp on tape. Use the best tape you can get your paws on. Since dropout on the tape means loss of data, the tape must have a high manufacturing standard. Some cassettes jam easily, and the thin tape found in C90 and C120 cassettes is too thin and fragile to be reliable. A premium grade C60 tape is ideal. Perfectionists might want to spend the extra money for chromium dioxide tape. The extra response can't hurt.

Store the tapes in a dust-free location, in their own container. Do not smoke near the tapes or the recorder, and clean the heads frequently. Tape cleanliness and quality are far more important in digital applications than in music.

The Recording Interface

Digital information from your computer is generally available as 8 bits parallel from either an I/O port or data bus. The tape is recorded serially; the conversion is best accomplished with a Universal Asynchronous Receiver/Transmitter (UART) IC.

The modulator is shown in Fig. 1. The serial output of the UART has logic 1 as a high level and logic 0 as a low level. IC2a and IC2b form a clock divider circuit, dividing the 4800 Hz clock signal by 2 or 4, depending on the UART output level. The output is a series of square waves which feed the tape recorder's input.

The poor frequency response of some tape recorders, especially those with dc bias, causes the manufacturers to exaggerate the treble being recorded, which distorts the square wave. Sine waves record better, but are harder to generate digitally. In some cases using a low pass filter makes the waveform usable; R1 and C1 perform this function. A smaller value for C1 may increase effectiveness with better recorders. Fig. 2 shows the effect of the recording process on digital waveforms.

The AUX output of the interface is 500 mV peak-to-peak and is for use with high impedance high level inputs. The MIC output is 50 mV, suitable for most units with microphone inputs.

The 4800 Hz signal must be capable of driving two TTL loads. While a crystal oscillator and divider chain work best, and a phase locked loop referencing the 60 Hz power line is also very good, the oscillator in Fig. 3 is simple and quite satisfactory (but requires calibration with a frequency counter).

If the available digital information from the computer is already in serial form with the necessary start and two stop bits, and is properly timed at 300 baud, the UART is not necessary. However, the 4800 Hz clocking signal should be synchronous with the serial data, with 16 clock pulses per bit. If the serial data is not at 300 baud, a UART receiver must first be used to convert the data to parallel form. It then is clocked through the UART transmitter as shown.

The OK TO LOAD line on the UART goes high when it is ready to accept a byte of parallel data. The data is then loaded into the UART transmitter by pulsing the LOAD line low for at least one usec or until the OK TO LOAD line goes low. The transmitter will then start transmitting the byte when the LOAD line is returned to the high state. When not transmitting, the output is high, causing the modulator to generate the 2400 Hz Mark signal.

The Playback Interface

There are several possible ways to recover the FSK signal from the tape. An FM discriminator or a phase locked loop demodulator can be used, just as with an amateur RTTY signal. Users of previous nonstandardized cassette interfaces can re-adjust them to decode the 1200/2400 Hz tones, but the most accurate system uses

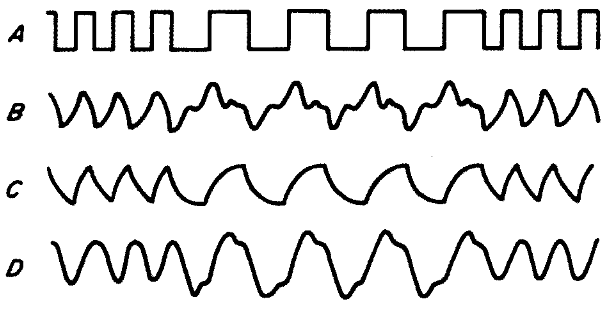

Fig. 2. If a square wave signal such as waveform A is recorded on a low cost cassette recorder, the playback response may look like waveform B, which is very difficult to demodulate. If the square wave is filtered with a low pass filter before recording (waveform C), the playback response will appear like waveform D, a usable signal.

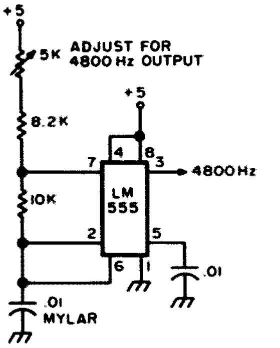

Fig. 3. Circuit of 4800 Hz oscillator. Use this circuit if a more precise and stable source of 4800 Hz is not available.

digital recovery to extract timing information from the recorded signal and uses that information to retime the recovered data.

Fig. 4 is a complete schematic of the playback demodulator. The signal from the cassette player is conditioned by IC3, an op amp used as a Schmitt trigger. The output of a Schmitt trigger is, by definition, either fully high or low, so it regenerates pure square waves from the distorted tape input. IC4 is a retriggerable one shot with a period set to 555 microseconds. As long as the input signal is 2400 Hz, the one shot is retriggered before it times out. Flip flop IC5a remains high, which is interpreted as logic 1. The 1200 Hz signal, on the other hand, has a period between pulses of greater than 555 usec, so the one shot times out, resetting IC5a. It stays at logic 0 as long as 1200 Hz is being received because the one shot is timed out whenever the next triggering edge occurs. When the 2400 Hz signal returns, the one shot stays high, permitting IC5a to switch back to high state. The output of this flip flop is the serial data.

While that simple circuit will work well if the tape speed is accurate to better than ±6%, such is frequently not the case. Since tape speed variations will be reflected in pitch variations in the recovered tones, it is possible to use the 1200 and 2400 Hz signals from the tape to retime the recovered data. Flip flops IC6a and IC6b extract this timing information. When the 1200 Hz signal is received, IC6a is preset with a pulse generated by C8 and R15 every time the one shot times out. The effect is to cause IC6 to divide by two. When 2400 Hz is being received, the one shot does not time out and IC6 divides by four. The result is a clock at the output of IC6b, at 600 Hz.

Instead of clocking the data into a shift register, the receiver portion of UART IC1 is used. It has built-in circuitry to identify the start and stop of each byte automatically. It also has three-state output (logic low, logic high, and functionally disconnected), which permits direct connection to most data buses and I/O ports. The UART needs a 16x clock, which is formed by phase locking a 4800 Hz oscillator to the 600 Hz output of IC6b. The PLL is adjusted to oscillate at 4800 Hz in the absence of any input signal. IC5b and IC9 divide the PLL output by 8 to drive one of the phase detector inputs, while the other input is driven by IC6b.

The UART receiver raises its DATA AVAILABLE output to logic 1 when it recognizes that it has received a complete character. Since the UART outputs are three-state, it is necessary to drive the RECEIVED DATA ENABLE input to logic 0 to read the parallel output data. After the parallel data has been read it is necessary to pulse the RESET DATA AVAILABLE line to prepare the UART to output the next byte. The pulse must remain at logic 0 for at least one usec, or until the DATA AVAILABLE line drops to logic 0.

Circuit Adjustments

The only adjustment necessary for the recording modulator is to put the 4800 Hz signal exactly on frequency. Since a Mark byte

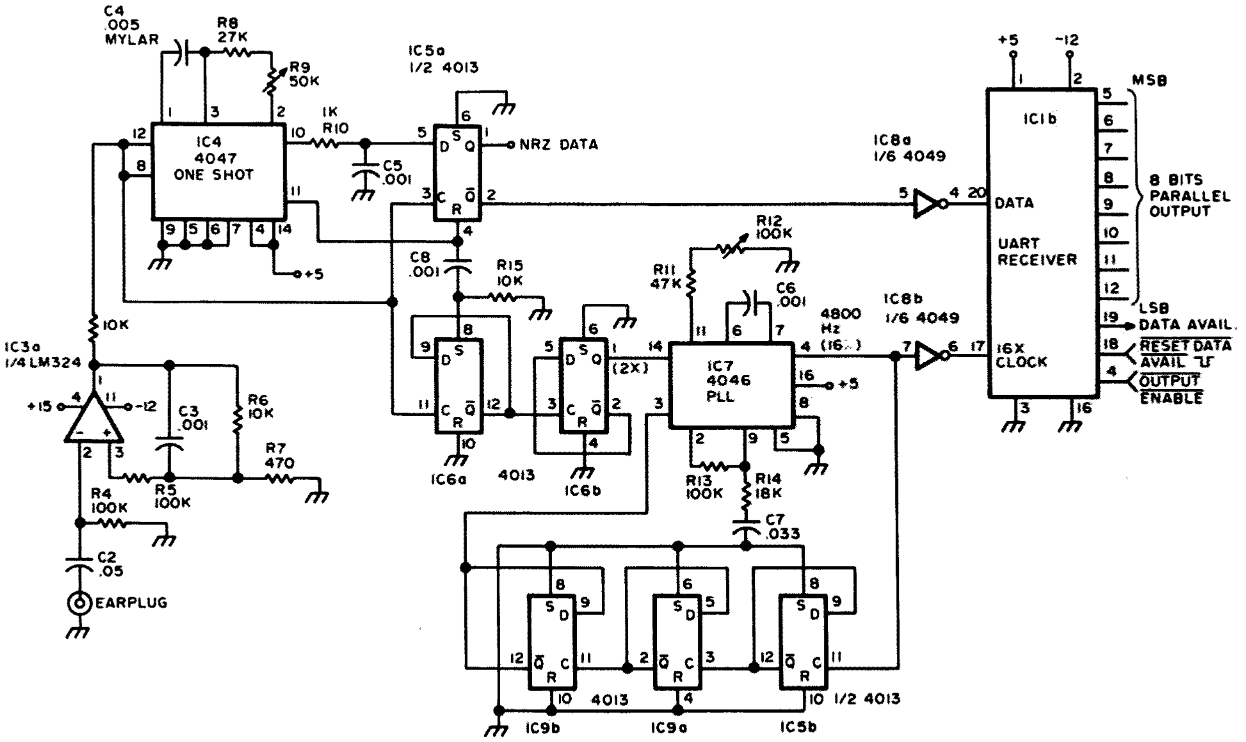

Fig. 4. Cassette data recovery circuit. Refer to text for circuit operation.

consists of eight (not seven or nine) cycles at 2400 Hz, this is fairly critical.

The data recovery one shot and PLL oscillator must be accurately adjusted for best results. The one shot is critical. To adjust it, set a well calibrated audio source to 1800 Hz with 1.5 to 3.5 V rms output. Adjust R9 until the data output of IC5a pin 1 just changes, measured on a high impedance voltmeter. Adjust R9 to as close to the point of change as possible.

The PLL oscillator is adjusted by R12 with no input to the playback input. If no counter is available, the oscillator output at IC7 pin 4 should be compared to the 4800 Hz signal used for the UART transmitter.

Circuit Operation

The circuit as shown will recover data most accurately if the earplug output signal of the tape recorder is between 4 and 10 volts peak-to-peak. Most portable recorders have that capability. If the cassette deck does not have a speaker amplifier, a low gain amplifier may be necessary. If the recorder uses dc bias, there may be too much treble, which necessitates turning down the tone control.

To comply with the standard for tape exchange, the recorded data should be preceded by at least 5 seconds of 2400 Hz tone before the data begins. This is accomplished by operating the recorder in the record mode for five seconds or longer before sending data to the UART transmitter. With the UART idle, the modulator generates 2400 Hz.

During playback, wait a couple of seconds before allowing the computer to accept the UART receiver output, to avoid reading the garbage generated by turning the recorder on and off. It is possible to have the computer control, via a relay, the remote control switch of the tape recorder under program control. It is still necessary to wait a few seconds before accepting data, due to the time spent starting and stopping the tape. The 2400 Hz leader provides that interval on the tape.

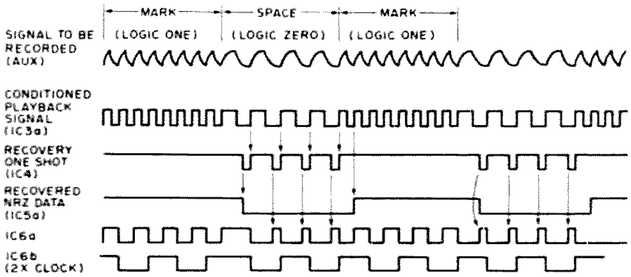

Fig. 5. Cassette modulator/demodulator waveforms.

Conclusion

Using this type of hardware for tape cassette modulation and demodulation simplifies programming for a cassette-oriented computer system. In some circumstances it may be possible to connect the interface hardware directly to the computer, while some computers may require peripheral interface adaptors to get the data in and out of the computer. ■

The cassette interface described here is manufactured by Pronetics Corporation. It is available fully assembled and tested on a 4.5" x 6.5" circuit card with standard edge connector. For price and other information write: Pronetics Corporation, PO Box 28582, Dallas TX 75228. – Ed.

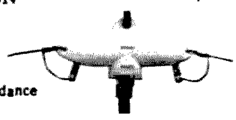

Silas S. Smith, Jr. WA9VFG
2308 McCord
Murphysboro IL 62966

Is Digital All That New?

To meditate on an experiment, a serious experimenter often shelves today's experiment, perhaps never to take it up again. The "light" was in the meditation and not in the experiment. This brings me to the point at hand – meditation as related to digital.

For several years now, a transition from analog to digital has been in the process. To many people, digital is considered as a rather new development, but I ask, "Is it really all that new?" The question may suggest the answer that digital has been around for some time.

Just for the fun of it, let us take a brief and somewhat abstract view of digital devices or communications through the age of man.

From man's beginning, he had a very good calculator at his fingertips as well as a computer with all the software that is necessary for its operation, although he had very little need for either in his primitive culture. It was 2 to 3 million years before man saw the need to communicate between computers. Man has, over the last 20,000 years, developed ways to communicate between computers.

If the old axiom is true that a picture is equal to a thousand words, and if we should equate the picture to a computer address and equate the thousand words to the memory of the computer, then the cave man had the basic idea in his cave drawings some 20,000 years ago. Programming his computer to accept more addresses (more pictures), he was able to develop a memory system called hieroglyphics, which used approximately 900 pictures. Up to this time man had almost exclusively used analog, which is called the spoken language. Hieroglyphic programming was too complex for most computers, so a much simpler system was developed using only about 24 pictures. Hierotics, as this system is called, was very effective digital-wise, but lacked the ability to communicate with analog systems. About 3,000 years ago a digital to analog and analog to digital system was developed. This system is often called phonic writing. Soon to follow was a digital system that was much more simple and was easily converted to analog. This system was made by the combining of the Phoenician phonic system and the Roman alphabet. Because this system had only 26 digits or letters and could be formed into word groups, it was adaptable to programming. Such programs are placed into a machine called a printing press and are read out into a permanent storage unit known as a book, which is a type of read only memory. With this type of ROM, the 2 or 3 million year old computer design has almost unlimited capacity to perform the most complex problems.

In Aristotle's theory of the universe formulated sometime around 400 BC, it was suggested that a binary system was possible. Such a system would consist of such variables as hot and cold, wet and dry, light and dark, etc.

Much experimenting in digital communications was taking place by the mid-1700s, parallel versus serial as each form was being developed. Static or friction electricity and its pith balls came first as a parallel system (i.e., one set of pith balls for each letter). Soon to follow was a synchronized serial form using only one set of pith balls.

Galvan electricity and the use of magnetic needles went through the same parallel and serial development. However, a new wrinkle was added. The new wrinkle was code – that is, left or right, operated or non-operated. Its form was much like that of Morse code.

From its inception in the mid-1800s, the electromagnetic (telegraph) system used a code in serial form. It was the search for the conversion of the electromagnetic digital system to analog that led to the development of the telephone – which just happens to be an analog device. It was only a few years ago that the conversion of digital to analog and analog to digital was electronically accomplished. Its form is called pulse code modulation.

Just as in the addressing of electronic computers, we have been simplifying the addressing to the 2 or 3 million year old design. Some examples include changing "The United States of America" to USA, and other conversions resulting in terms such as IRS, FCC, IBEW, NAACP, FBI, CIA, 73 and others.

What is the answer to the question, "Is digital all that new?" I would say no. I would go so far as to say that at present we are not really in a truly transitional period but rather in a sort of jockeying position. As we turn the corner, I predict that the next big development will be a 3D computer that will make the present computer look like a small contribution to the overall communications system – but I see no way that the old 2 or 3 million year old design will ever be replaced. ■

May 77

I/O EDITORIAL

from page 69

your own if you want to customize the programs to fit your exact needs or if you want to use the gear for some new application. Who knows, once you're set up you might want to score a ham contest and program your computer to cross check every reported contact on the incoming logs . . . that program would keep you out of trouble for a while. Or you might want to analyze Oscar contacts for anomalies to see if there are indications of over the horizon propagation at times.

The uses for your computer will be expanding constantly as you discover new things you want to do . . . and learn more about how to program the beast to do what you want. When you have worked several weeks in your spare time to perfect a program, you are on the one hand a bit reluctant to just give away all that work to anyone who comes along . . . on the other hand you are so proud of what you have accomplished that you want others to see how neat it is. I don't know how this will work out in the long run . . . perhaps there will be some programming sales services to help you get a small royalty for your effort . . . selling your program to those who want it for a few bucks. On the other hand, the magazines of the future may devote pages to new programs . . . we'll see.

Right now you can buy some programs on cassettes . . . such as BASIC Language . . . a ham package from The Digital Group . . . and a few things like that. Much more is available in printed form . . . *What To Do After You Hit Return* is a book full of game programs and sample runs of the games to give you the idea. Digital Equipment Corporation has a book (which they don't want us to sell) of 101 games in BASIC. Much of this is pretty much the same as the *What To Do* book which is published by People's Computer Company and is available for $6.95 from *73* . . . (ahem . . . commercial).

The people who are selling programs on cassettes get bent out of shape if you run off a copy for a friend. They spent a lot of time (which is money) writing the program and getting it perfected (debugged) and they feel that you are stealing from them if you don't pay the freight. A letter was just sent around to this effect by the chaps who developed the BASIC program for MITS.

Software such as the MITS BASIC program is usually copyrighted, but this is difficult to protect. It may be that programmers will develop some smarts in this line . . . perhaps taking a hint from map publishers. Every map you see that is copyrighted has some extra squiggles in the borders of a state or a country, or something which is not there in real life. Then, when you innocently take a gas company map and trace out the part you want and use it as an illustration for your article or in a book, wham! One large map maker pulls in over a million dollars a year in copyright infringement cases, I am told. The fact is that it is awfully difficult to explain why your map has that squiggle over there or perhaps an extra town that just doesn't exist (a Cleartype Map favorite) . . . particularly when the case is scheduled to come up in court soon.

Would it be that difficult to customize each copy of BASIC with a little identifying (but non-printing or operating) character? It would be hard to find and would make each copy of the program individually identifiable . . . and might put some teeth into contracts. Just an idea . . . I'm sure ways will be found to solve the software sales problems . . . of course it might happen that programs will eventually just be part of the hardware cost and be available essentially free.

Yes, with this software you will be able to get your computer to do a lot of nice things . . . like play games. But you will still have to learn how to do your own programming for anything off the beaten track. To put it into a percentage . . . argue with me if you like . . . figure 25% hardware . . . 25% language programming and 50% your own programming efforts. Once you get into computers you are going to have your hands full . . . and you will have a ball. You may even decide to go back to fresh orange juice.

Wayne Ledder W1EWL
8 Overlook Drive
Medway MA 02053

The Ins and Outs of TTL

The design of digital circuits using TTL integrated circuits can be much less frustrating if some simple rules are followed. I am referring to the rules that dictate how and why interconnections between the various circuits and the outside world are made. If you follow the rules, you should be able to put together a digital circuit from TTL ICs and only have to worry about wiring errors, logic goofs, and bad ICs. The information is from the manufacturers' literature and my own experiences on the bench.

Ins

The most common and most easily overlooked input of TTL circuits is the power supply. One look at any TTL circuit and you quickly know the value of the supply voltage is +5 V. For those who worry about such things, the tolerance is ±5% (military versions are ±10%). In other words, the manufacturer only guarantees proper operation of his ICs when the supply voltage is between +4.75 V and 5.25 V. This is not to say they won't work at other voltages – only that there is no guarantee.

When TTL circuits switch they generate very high frequency current spikes on the power supply lines. These current spikes traveling through the high frequency impedances of the power supply lines cause voltage spikes which can couple into other circuits and trip flip flops, clock counters, and do all sorts of nasty (and very difficult to find) things. To protect yourself from this problem these power connection rules should be followed:

1. Connect a .01 uF disc capacitor from the +5 connection to the ground connection of each IC. Locate the capacitor as close as is practical and use short leads. A miniature disc with a voltage rating of 10 volts or more is a good choice.

2. Use fairly heavy wire (I recommend #18 or larger) for +5 and ground lines and

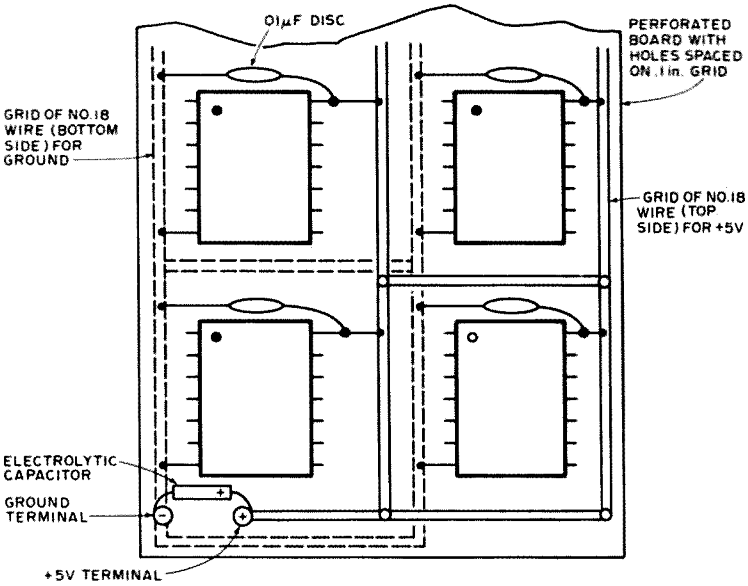

Fig. 1. Illustration of rules for power supply connections.

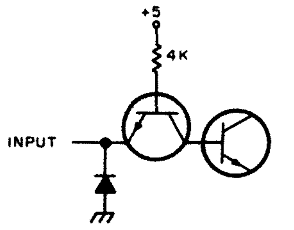

Fig. 2. Standard TTL input circuit.

arrange them so there are many connections. Try to simulate a ground plane and a +5 plane.

3. For every 20 ICs or so in your circuit put in one electrolytic capacitor from +5 to ground. Any value between approximately 4 and 25 uF and 10 volts or more rating is OK. If only one is used, try to locate it where the +5 first comes onto the board. If more are used, distribute them more or less evenly over the board.

4. Use a regulated supply for the +5 V. There are many circuits for making a regulated supply. Look at almost any article using ICs and pick one that suits your requirements.

Some of the above rules may seem obvious while others are not so well known, especially to the newcomer. Fig. 1 illustrates one method of construction employing point to point wiring following the above rules.

Next on the list of TTL "ins" let's investigate a typical input circuit as shown in Fig. 2. In order to guarantee that the transistor is turned on we must do two things. First, we must make the input voltage less than .8 V, and second we must draw out of the emitter 1.6 mA of current. In order to guarantee that the transistor is turned off we must also do two things. First, we must make the input voltage greater than 2 V, and second we may have to supply up to 40 uA of leakage current. The diode is not necessarily present in all circuits. Its purpose is to limit

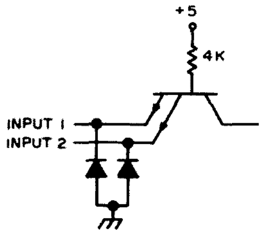

Fig. 3. Input circuit of 2-input gate.

negative pulses on the input that may occur due to transmission line effects on long interconnections. This input characteristic is called 1 unit load (UL) and a circuit such as Fig. 2 which contains 1 UL is said to have a fan-in of 1.

If a second emitter is added to the circuit of Fig. 2 we have a 2-input gate configuration, as shown in Fig. 3. Each input has its own protection diode. If either input satisfies the "on" requirements the transistor will be on. Obviously, both inputs must satisfy the "off" requirements in order to turn the transistor off. By adding more emitters the manufacturers make multiple input gates. The 7430, for instance, has 8 emitters.

What about the undefined area of the input characteristic which lies between .8 V and 2 V? It is just that, undefined. This is a "grey area" where nothing is guaranteed and, except for some special circuits (discussed later), it should be passed through as quickly as possible (less than 200 ns). If the input passes through this region too slowly the output can actually break into oscillation. In fact, this is how a TTL oscillator gets started: by being biased deliberately into this "grey area" until oscillation occurs and then having the frequency of oscillation controlled by external components.

Inputs from the Outside World

TTL circuits connect to

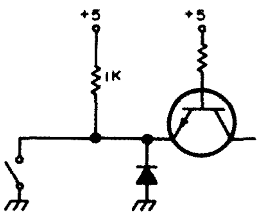

Fig. 4. Using a normal switch to drive TTL.

themselves very nicely, but the outside world is not necessarily TTL compatible. How do you satisfy the input requirements outlined above? It is very easy to get a voltage less than .8 V and able to sink 1.6 mA: Just short the input to ground with a switch. What about the other limit? How do we get the high voltage and current source? Fig. 4 shows one way. The 1k resistor guarantees that even with 40 uA being drawn, the voltage will be above the required 2 V minimum.

When the input is relatively slow in changing you can avoid the "grey area" problem by using TTL ICs which have a special hysteresis built into them. These are called Schmitt triggers and have different switching points depending on whether the signal is positive or negative going at the time. The 7413, 7414, and 74132 are examples of this Schmitt trigger type of circuit.

When considering switches as the connection to the outside world another potential problem arises. The contacts of the switch don't close "cleanly." They actually hit and bounce apart one or more times before remaining closed. Normally this is no problem, but if you were attempting to count switch closures it would not be possible. Fig. 5 shows how to use an SPDT switch and two NAND gate elements to form a flip flop which debounces the switch. This is a very common form of circuit configuration called cross-coupled NAND gates.

Often when you are finished with a logic design you will find yourself with unused inputs to some circuits. *Never*, repeat, *never* leave any unused input to float; it will cause nothing but trouble. Even though an open input is theoretically the same as a high, in practice it is very sensitive to any kind of noise and can cause the output to change for no apparent reason.

What do you do with unused inputs? There are several choices:

1. If it will not prevent normal operation of the circuit you can ground the unused input or connect it to a high source.

1a. The high can be obtained by connecting directly to +5 V. The manufacturers don't recommend this since, if the input goes above +5.5 V, it is possible to damage the input if the current is not limited in some way. I do it all the time with no problems (yet). I recommend connecting to the +5 V connection on the chip itself.

1b. Connect the unused input to +5 V

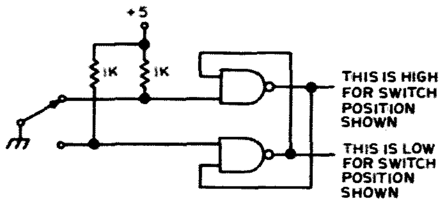

Fig. 5. Using cross-coupled NAND gates to debounce a switch.

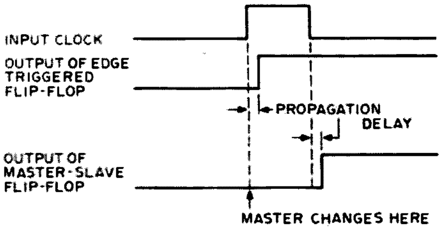

Fig. 6. Timing diagram showing difference between edge-triggered and master-slave flip flops.

through a 1k resistor. One resistor can tie as many as 50 inputs to +5 V.

1c. Use an unused inverting element and ground the input(s) to force the output high. This high output can then be used to pull up as many inputs as its fan-out is rated (see output section).

2. Unused inputs of gates can be connected in parallel with used inputs. There is no increase in load for low inputs. The total current required for the two inputs in parallel is still 1.6 mA. Actually you can tie as many in parallel as you wish and the total low fan-in will not exceed 1 UL. The high fan-in does increase, however, as each emitter may require the 40 uA leakage current. As long as the high fan-out capability of the driving circuit is not exceeded you can parallel gate inputs.

One more input characteristic of TTL circuits is worth mentioning. This is the difference between so-called edge-triggered and master-slave flip flops. The outputs of both circuits react according to the status of the control lines at the time the clock pulse occurs. An edge-triggered flip flop output reacts essentially immediately. The small delay is called propagation delay. A master-slave flip flop is more subtle. On the leading edge of the clock pulse the master reacts like an edge-triggered flip flop. The output, however, is from the slave and it does not react until the trailing edge of the clock pulse. Fig. 6 shows this difference in graphic form. The main point to remember is that a master-slave flip flop requires a complete clock cycle, not just one edge.

Outs

There are three basic forms of output circuit used in TTL. The most common form is shown in Fig. 7. This is the so-called totem pole configuration. In the low output state the bottom transistor is on and the top transistor is off. The bottom transistor sinks the current from the connected inputs. In the high state the bottom transistor is off and the top transistor is on. The top transistor now supplies the leakage currents for the connected inputs. This is the normal version. There are minor variations on this circuit but they all operate the same way.

The number of unit loads an output can drive is called its fan-out. The standard TTL IC has a low fan-out of 10 UL and a high fan-out of 20 UL. In other words, a standard TTL output can sink 16 mA (10 times 1.6 mA) and the output is guaranteed to be no higher than .4 V or it can source 800 uA (20 times 40 uA) and the output is guaranteed to be higher than 2.4 V. If you compare these output specs with the input specs you will find there is a .4 V safety margin.

There are several ICs which are specifically designed to drive larger loads. The 7437, 7438, 7439 and

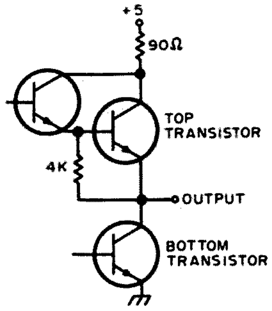

Fig. 7. Totem pole TTL output circuit.

7440 will all sink 30 UL. The 7437 and 7440 will also source 30 UL.

The 7438 and 7439 belong to another class of output circuit called "open collector." In this configuration the top transistor is missing and the bare collector of the bottom transistor is brought out. With this circuit you need an external load resistor of some sort to provide the pull-up to +5 V. If the voltage rating of the IC output is high enough (the 7407 is rated for 30 V, for example), you can switch much higher voltages, and even drive relays and lamps if the current rating is not exceeded.

The open collector circuit is also used in a logic configuration known as both "wired-and" and "wired-or." Fig. 8 shows how this works. All the open collector outputs are tied to a common pull-up resistor. If any output goes low they all go low (wired-or), and the output will only be high when all the output transistors are off (wired-and, hence both terms). There is a practical limit to how many outputs you can connect together. The pull-up resistor must supply the leakage current for all inputs and all outputs when they are all off and still maintain the voltage above 2.4 V. However, it must still be large enough to limit the total current of resistor plus inputs to 16 mA (10 UL) when any output is on.

Contrary to what you may have read previously, it is OK to connect TTL outputs in parallel, provided you also connect the inputs in parallel so the outputs are doing the same thing at the same time. In fact, the manufacturers recommend this technique as one way to increase fan-out when the load is too much for one output. However, you should restrict this paralleling to elements in the same package because large transient currents are generated and can cause problems if they are not closely confined.

The third and newest type of output configuration is the so-called tri-state or 3-state output. This is a normal TTL totem pole output where both transistors can be turned off. An extra "enable" input

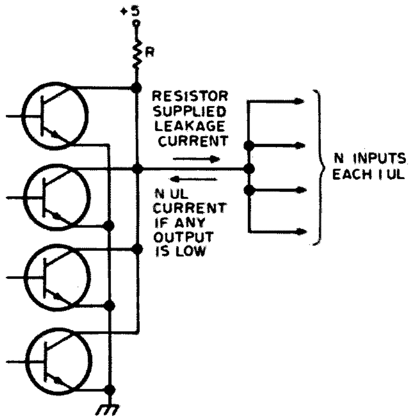

Fig. 8. Using open collector outputs for wired-or configuration.

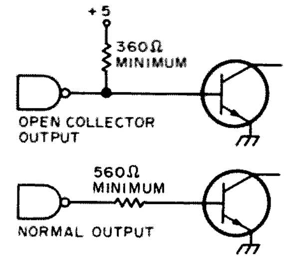

Fig. 9. TTL driving transistors.

is added to the circuit and when enabled the output functions as a normal TTL output. When disabled the output is essentially disconnected. This allows one common wire with many tri-state outputs connected to it to carry all sorts of different information (even in different directions) on a time division multiplex basis. All you have to do is enable the appropriate outputs and inputs at the proper time. This "bus structure" is very common in the world of computers and microprocessors. I have used tri-state circuits to latch 336 bits of data at one time and then output them 8 bits at a time. That is 42 different outputs on each data line.

Someplace in your design you have to connect outputs to the outside world. There are special ICs for driving displays of different kinds as this is one of the most common outputs encountered. I have also mentioned using high voltage open collector outputs. If you need more current or voltage, you can use a circuit such as shown in Fig. 9. In both versions the resistors limit the base current to a safe value. When driving an external circuit of any kind it is best to use an output dedicated to only that load. That way, if any stray signals are picked up and fed back on this line to the outside world they won't be able to couple into another input and disrupt operation. Also you should never use the output of a flip flop (this includes counters, shift registers, etc.) to connect to the outside world. It is too easy for a stray signal to sneak back, get inside the flip flop, and do weird things.

When it becomes necessary to switch large output loads, often there are transients generated that ride back in on the ground and cause stray triggers of flip flops and other nasty things. A relatively new circuit element called an opto-isolator eliminates this problem completely. Even when driving all 8 channels plus sprocket advance of a high speed paper tape punch there is no problem – and that represents 9 A at 24 V every 9 ms. The opto-isolator (see Fig. 10) consists of an infrared LED and phototransistor. The LED is driven from an open collector output and its energy is coupled optically (no physical connection) to the phototransistor, which is then used as a low level switching stage in a totally electrically isolated circuit.

The preceding rules and suggestions will not eliminate all your digital logic problems but they will greatly reduce them, especially those frustrating random ones. Remember the manufacturers only guarantee proper operation if you stay within the specs. Exceed the specs and all bets are off. ■

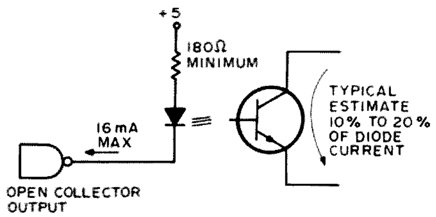

Fig. 10. Using an opto-isolator.

LETTERS

from page 75

the requirement to 18 wpm — an interesting contrast!

Another interesting note — a *Stars and Stripes* article (I wish I'd saved it) of a few weeks ago told of the Navy having trouble coordinating with an allied nation's navy because none of the navy radiomen could handle CW — and the foreign navy didn't have our fancy RTTY and digital equipment!

At any rate, congratulations on a great magazine, Wayne, and I hope you get the bugs caused by the size change worked out soon.

Hartley J. Gardner WA1KNG/DL
APO NY

ZL CHANGE

Please note change of address for the New Zealand QSL Bureau: P.O. Box 40-212, Upper Hutt, NEW ZEALAND.

G. C. Blackwell ZL3NT
General Secretary

DOING YOURSELF OUT

I thought I would enclose a quick note along with my reader service requests to tell you what a great mag you put out. Anyone with an interest in amateur radio, and with your new section on microprocessors, would be doing himself out of a great deal of enjoyable reading by not subscribing to *73*. Keep up the good work.

Bruce McCreath VE3EAR
Goderich ONT

TO THE TROOPS

Got my brand new format *73* yesterday over here at APO 09189 (southwest Germany), and I must say that I am impressed! I really like the new size, even though I was skeptical when I first heard that you were switching over.

Really a nice idea to have the Heath and the Hickok catalogs within the same covers. The new *73* is even better than before, and I have taken steps around my house to convert my bookshelves over to the new *73*. I appreciate the skill and preplanning that went into your conversion as per page 3.

Kinda feel for a guy like Fred Lichtgarn who is quitting before starting.

The new *73* made it to my APO, and then to me, in beautiful condition, so your mailer system is working fine.

Many thanks Wayne, and to the troops at *73*, who continue to keep better and better *73*s coming this way!

SSGT Howard H. Ragan
K7ATU/DA4AU
1141-2 USAF SAS
APO NY 09189

AIR BLUSH

I am writing to confirm your claim for the efficacy of your tapes (code). They have worked for me. I cannot truthfully give you the exact number of hours I used the 5 wpm tape, but I will approximate it at 6 hours, over a period of a few weeks. After that time, I joined a ham radio class at Cerritos College, Cerritos, California. The instructor, Roy Tucker K6UZB, has his own code tapes to loan to the students. I tried his and found them too simple, since after five weeks of class sessions I passed the test run for the Novice code. I believe that it was my previous study of your tape that made this possible, plus the fact that I am a musician and am quite accustomed to listening for rhythms and memorizing them. It was not difficult for me at all. I am presently working on upgrading to a General license (hopefully) and am just starting on the 13 wpm tape now. I will attempt to keep a check on the length of time it takes to achieve this speed. You may also find it interesting to know that Mr. Tucker uses the same principle that you do of recording the code character at 13 wpm and increasing the spacing between for ease of identification. He adds the device of naming the letter it represents. This is good at the start, but becomes irksome.

There is something else on my mind, Wayne. I feel I have something to say to your readers from the point of view of a white, female Caucasian, presently 53 years of age, married, the mother of two girls, and a successful pianist and teacher. I was dragged into this radio thing by my husband, who was formerly a ham and had dropped it as a young man. My attitude was pretty bad — the best you could say about it was that I was ambivalent and couldn't see the point of it for myself. It was obviously good for my husband, and I was touched that after 16 years of marriage he still wanted me to share his interests. I simply

Continued on page 154

NEVER SAY DIE

. . . de W2NSD/1

EDITORIAL BY WAYNE GREEN

from page 4

charge admission to the same party . . . or you may not.

Be sure to have someone with imagination and some business experience with relatively large sums of money involved so you don't penny ante the hamfest. You are working with thousands of dollars, so you can't afford to be too stingy on things. If you pull it off well, you will be able to keep the hamfest going year after year, building up in displays and hamfesters.

How about some articles on successful hamfests to spur interest in this activity?

VHF ENGINEERING

Bob Brown W2EDN, just back from one of the Windjammer cruises of the Caribbean, is really hot for a good design engineer to help him work up some new products. If you know of anyone who likes to do that sort of "work," have them get in touch with Bob. Bob is looking for someone with a lot of background in PC board layout and design . . . and he's got a darned good salary ready for someone. The Binghamton area is a nice one . . .

I gather that Bob and his family enjoyed the cruise . . . we've been advertising them in *73* off and on and had quite a few enthusiastic letters and calls from happy cruisers. They are strictly informal and low key . . . almost do-it-yourself vacations.

73 IS LOOKING, TOO

We're still in need of someone with a good ham background to help put together books. A good technical background will help us will an ability to write. And New Hampshire is even better than Binghamton for living. You could do worse.

As long as you have to work for a living, why not work in your major hobby and enjoy every minute of it? And as long as you have to live, why not live where others come for vacation all year 'round?

D. W. Ishmael WA6VVL
1118 Paularino Avenue
Costa Mesa CA 92626

Build a CW Memory

While building a random access memory (RAM) for my keyer, it occurred to me that my CW operating habits did not require the versatility of the RAM and that my memory requirements could be satisfied with one or more programmable read only memories (PROMs).

Although the control logic for the read modes are similar for RAMs and PROMs, PROMs offer a non-destructible memory (within their recommended operating parameters) after their initial programming,

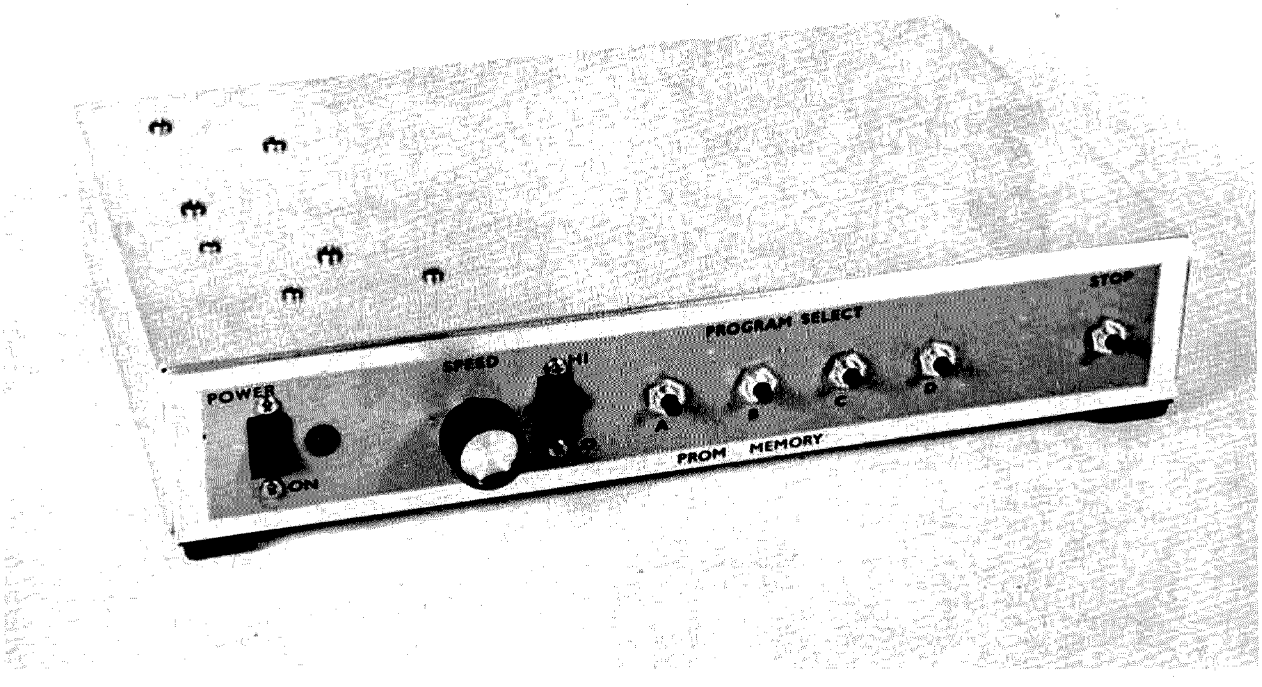

without the need to frequently refresh the memory as is necessary with RAMs.

The memory described is self-contained and need not be used with a keyer. The output circuitry is designed to drive grid-block keyed transmitters with key-up voltages not exceeding −100 volts. TTL inputs are available for keying the transmitter from an external source (i.e., the digital output from additional memories, a keyer, or CW identifier).

Circuit Description

Fig. 1 shows a simplified block diagram of the PROM memory. The memory uses four Intersil IM5600C PROMs. These PROMs are fully decoded TTL Bipolar 256-bit custom programmed read only memories organized as 32 words by 8 bits (U7-U10). Open collector outputs and chip enables insure simple memory expansion. An effective memory capacity of 1024 bits is obtained by ORing the four 256-bit chips together. I chose a 256-bit PROM because it offers a convenient memory length of approximately 22 characters. Memory retrieval is initiated with the appropriate program select push-button switch (S2-S5). The program can be stopped at any point with the stop push-button switch (S1).

U3 and U4 are 7476 Dual J-K flip flops with preset and clear, used as start/stop flip flops. The stop push-button switch, S1, is connected to the preset inputs (pins 2 and 7) of U3 and U4. Grounding this bus forces the Q outputs to logic 1, disabling the clock and U6, stopping the program (a logic 1 on pin 7 of U6 forces pin 5 low). The clock inputs (pins 1 and 6) are connected together. A negative edge at the clock inputs, corresponding to the end of the 256th bit, will clock Q to logic 1, disabling the clock and U6, ending the program. Individual program select switches are connected to the clear inputs (pins 3 and 8) of U3 and U4. Grounding *one* of these pins will start the program corresponding to the PROM selected. The Q outputs of U3 and U4 (pins 11 and 15) are connected to the chip enable inputs (pin 15) of the four PROMs. The appropriate PROM is enabled by forcing one of the outputs of U3 or U4 to logic 0, enabling the clock and U6, starting the program. Starting the program resets the eight bit binary address counter U1 and U2.

U1 and U2 are 7493 TTL MSI 4-bit binary counters used to address PROMs U7-U10 and U6, a 74151 TTL MSI 8-line-to-1-line data selector. The first three bits from the counter address U6, while the remaining bits address PROMs U7-U10. In this fashion U6 multiplexes the PROM outputs of eight lines to one line before the address counter selects the next word.

U5 is a 7420 TTL Dual 4-input positive NAND gate. It is the enable/disable gate for the clock and U6 and the reset gate for the eight-bit binary address counter. U11 is a 7403 TTL Quadruple 2-input positive

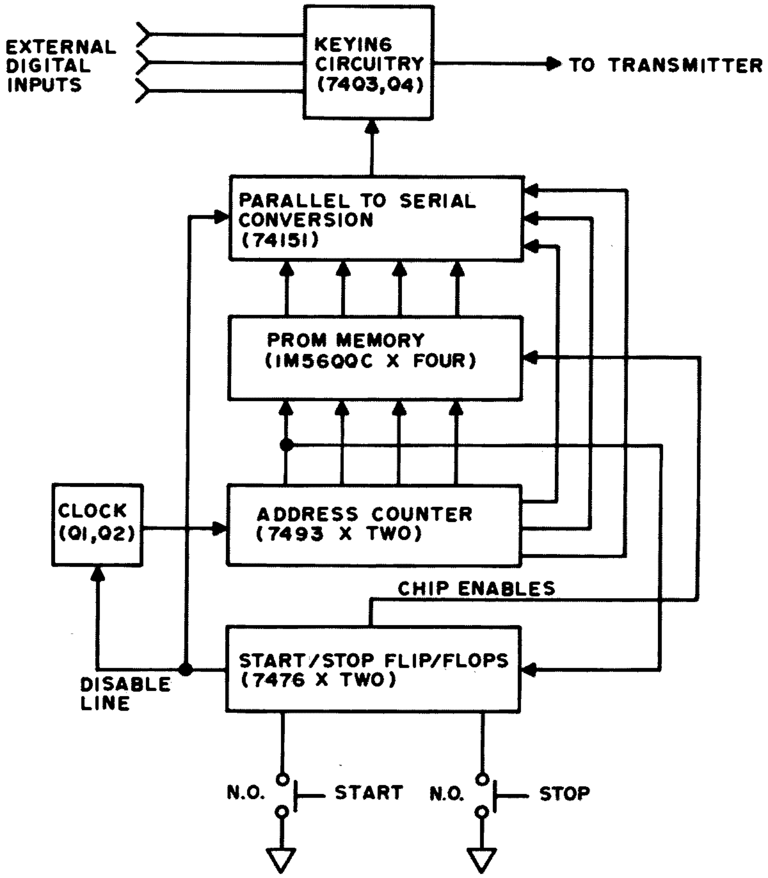

Fig. 1. Block diagram of the PROM CW generator.

NAND gate with open collector outputs used as the input for the transmitter keying circuitry.

Clock pulses for the memory are generated by a relaxation oscillator consisting of Q1 and Q2 and associated parts.[1] The oscillator is the same one used in my keyer and was selected so that the speed controls could be ganged and would track in the event that the keyer would be packaged with the memory (it wasn't).

Programming

PROMs are fabricated with all logic levels at zero. The programming procedure open-circuits metal links which results in a logic 1 at selected locations in the memory. Intersil, instead of using a metal link, forces a resistive shaft through the junction of one diode in the memory cell resulting in a logic 1 at selected locations in the memory. Once the memory cell has been programmed to a logic 1, that bit cannot be altered (reprogrammed).

Distributors of PROMs offer custom programming services or the reader may program his own. Design data sheets and application notes describe the programming procedures in detail.[2] Read these instructions carefully and fully understand the address methods as programming errors can be costly.

Fig. 2 illustrates a typical programming card for the following program: DE WA6VVL WA6VVL WA6VVL K. Standard spacing should be used in writing the program. For example, use 7 bits for a word space, 3 bits for a letter space, 3 bits for a dash and 1 bit for a dot.

The quoted price from R.V. Weatherford included programming costs. One advantage of a distributor programming your PROM is that they verify its program before they send it to you.

Power Supply

The 5 volt supply illustrated in Fig. 3 can be built to satisfy the requirements of the memory circuitry. U12 should be mounted on a heat sink similar to the Wakefield 680-.75A or 621-A.

U12 dissipates only 1½ Watts at nominal line using a 6.3 V transformer. However, at low line, ripple feeds through the regulator. No problems with the memory have been experienced under low line conditions to date. A slight improvement in low line operation can be gained by using a 12.6 VCT transformer and a full wave center-tap rectifier.

If you anticipate using your keyer with this memory, do not attempt to power the memory circuitry from your keyer power supply unless it is capable of supplying an

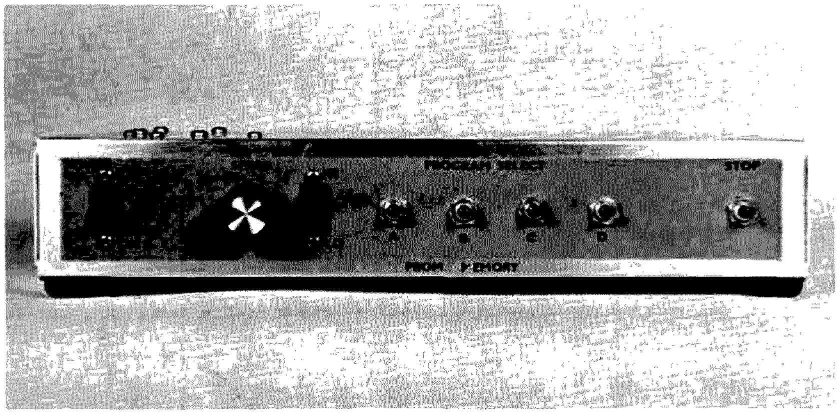

The program is selected with the appropriate program select push-button switch A, B, C or D. The program can be stopped at any point with the stop push-button switch. A single 20k speed control can be used and the HI/LO switch deleted.

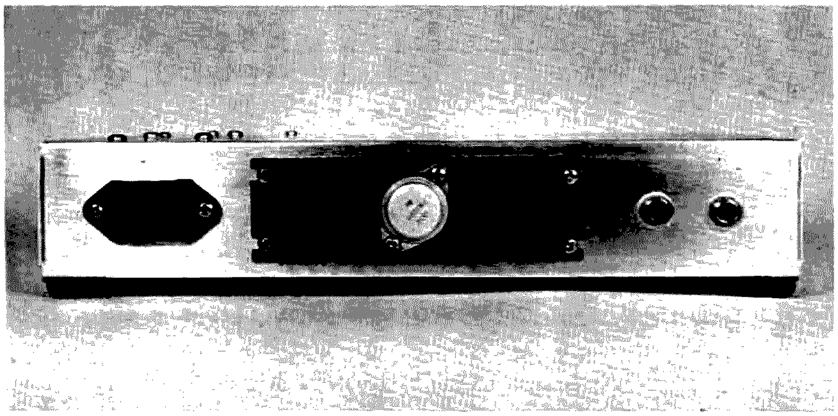

U12 is shown mounted on its heat sink. The two open-circuit phone jacks are connected in parallel, providing an input for the author's keyer and an output for the transmitter. A line cord and grommet may be substituted for the 115 V ac connector.

additional 450-650 mA.

Construction

The memory is housed in a Cal Chassis 7" x 11" x 2" aluminum chassis base. The majority of the memory components are mounted on a single-sided 8" x 5" glass-epoxy circuit board. The board is fabricated to fit a standard 22-pin card edge connector.

Since the memory utilizes four PROMs in

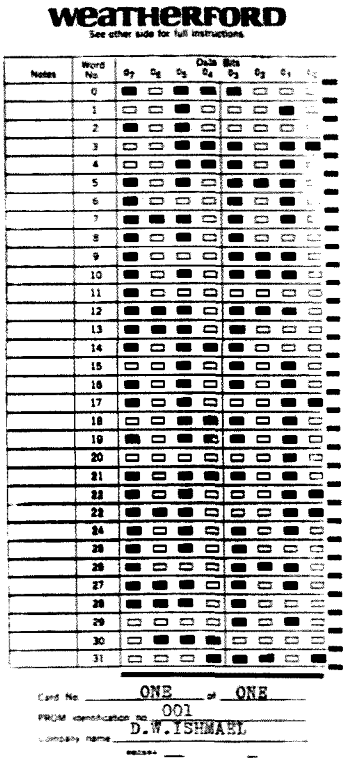

Fig. 2. Programming card (65%). The above program, DE WA6VVL WA6VVL WA6VVL K, is read from right to left, top to bottom. The program is written in the same fashion.

Weatherford P/ROM Programing Card

Ordering Information

1. Company name D.W.Ishmael
2. Company address 1118 Paularino Ave.,Costa Mesa, Calif
3. Requisitioner's name Above
4. Telephone number (714)979-5858
5. P/ROM manufacturer's part number IM5600C
6. Quantity of P/ROMs required 1
7. Quoted price per P/ROM $6.00
8. Requisitioner's purchase order number
9. Special P/ROM marking instructions 001
10. Shipping instructions UPS

How to use this card

1. Use a soft pencil (No. 2)
2. On the "program" side of every card mark blank spaces for the logic "1" (high output state) data-bit locations in your program.
3. Write anywhere on the shaded portion of the card. DO NOT mark in the unshaded portion unless you are indicating a "1" data-bit location.
4. DO NOT ERASE in the unshaded data-bit portion. If an error is made, destroy the card.
5. On card No. 1 of each program, complete the "Ordering Information" section above.
6. Pack cards with stiff backing to avoid damage.

Take completed cards to your nearest Weatherford sales office or send to:
Weatherford Programing Center
6921 San Fernando Rd.
Glendale, CA 91201

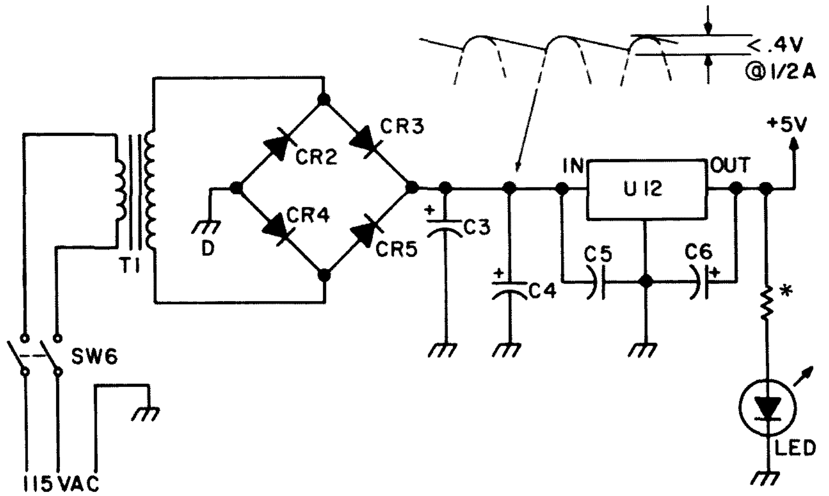

Fig. 3. Power supply. *Select for appropriate current through LED selected. 150 Ohms was adequate with a Hewlett-Packard 5082-4440 LED.

Parts List

C1	4.7 mF 10 W V dc tantalum capacitor	R12	2700 Ohm ½ Watt carbon resistor
C2	.001 mF ceramic capacitor	R13	10,000 Ohm 2 Watt linear taper potentiometer
C3-4	4700 mF 16 W V dc electrolytic capacitor	R14	82 Ohm ½ Watt carbon resistor
C5	.33 mF ceramic capacitor	R25	10,000 Ohm ½ Watt carbon resistor
C6	2.2 mF 10 W V dc tantalum capacitor	SW1-5	Normally open push-button switch. Similar to Alcoswitch MSPS-103C SPST.
C7	.1 mF 10 W V dc disc ceramic capacitor		
CR1	1N914 silicon signal diode	SW6	DPST miniature rocker switch. Similar to Alcoswitch MSL-203N-7.
CR2-5	1N4001 or equivalent 50 V piv rectifier diode		
Q1	2N5086 or equivalent PNP transistor	T1	6.3 V ac Filament Transformer, 1 A. Similar to Allied 6K9HF or Triad F-14X.
Q2	2N5961 or equivalent NPN transistor		
Q3	2N5224 or equivalent NPN transistor	U1-2	7493 TTL MSI 4-bit binary counter
Q4	2N4888 or equivalent HV PNP transistor	U3-4	7476 TTL Dual J-K flip flops with preset and clear
R1-R5,R16	470 Ohm ½ Watt carbon resistor	U5	7420 TTL Dual 4-input positive NAND gate
R6,7,15,17-24	4700 Ohm ½ Watt carbon resistor	U6	74151 TTL MSI 8-line-to-1-line data selector
R8	22 Ohm ½ Watt carbon resistor	U7-10	Intersil IM5600C 256-bit PROM
R9	27,000 Ohm ½ Watt carbon resistor	U11	7403 TTL Quadruple 2-input positive NAND gate
R10	39,000 Ohm ½ Watt carbon resistor	U12	7805 or LM309 Three terminal regulator
R11	15,000 Ohm ½ Watt carbon resistor		

parallel on a single-sided board, there are a number of jumpers (92) and holes (434) on the circuit board. The jumpers are installed first with the rest of the components following. Sockets are advisable due to the cost of the integrated circuits and PROMs. They not only speed troubleshooting when the need arises, but also prevent overheating during the soldering operation. The power transformer, filter capacitors, regulator, panel switches and controls are mounted on the aluminum chassis.

Total assembly time for the board, including drilling the holes, was under 4 hours. Mechanical and chassis wiring consumed another 10 hours.

After assembly, connect pins 1 and 20 together on the connector. This connects the digital output of the memory to the first input of the transmitting keying circuitry. If there are no additional inputs, ground pins 2, 3 and 4.

After checking the power supply voltage, connect the power supply, start/stop push-buttons and speed control, and the memory is ready for use.

Two open-circuit phone jacks have been provided on the rear apron of the chassis. They are connected in parallel providing an input for my keyer and an output for the transmitter.

Turn the PROM memory on "off the air" as it will take a few seconds for the memory to clear itself, the actual time dependent upon the setting of the speed control.

Alternatives

If the reader was not satisfied with using the PROMs selected in this article, there are a number of PROMs available from which the reader could choose. Texas Instruments, for example, offers the 74186 (512-bit, 64 words by 8 bits), 74187 (1024-bit, 256 words by 4 bits) and the 74188A (256-bit, 32 words by 8 bits). There are pin-compatible equivalents available from other manufacturers. The Intersil IM5600C is pin-compatible with other 256-bit PROMs including the Texas Instruments 74188A and Signetics 8223.

If the reader was reasonably sure that his program would not change, the 1024-bit PROM might be a better choice with simpler supporting logic. Additional benefits include less than 2¢/bit (compared to about 2½¢/bit for 256-bit PROMs) and one third the board area. One possible disadvantage is the eight programming cards which need to be filled out.

Pin Assignments

1 TTL input. Logical 1 (+2.5-5.25 V) will key transmitter. Ground if not used.
2 TTL input. Logical 1 (+2.5-5.25 V) will key transmitter. Ground if not used.
3 TTL input. Logical 1 (+2.5-5.25 V) will key transmitter. Ground if not used.
4 TTL input. Logical 1 (+2.5-5.25 V) will key transmitter. Ground if not used.
5 A spare
6 B spare
7 C spare
8 D spare
(5–8) May be used to externally enable the PROMs instead of U3 & U4, or connected to the chip enables to drive external LED displays.
9 Keyer output. Designed to drive transmitters utilizing negative grid-block keying. The PNP driver transistor specified will withstand −100 volts under key-up conditions. Do not use with cathode keyed transmitters.
10 Digital output. Do not use for keying transmitter. Output is low as transmitter is keyed. Logical 1, +2.5-5.25 V. Logical 0, 0 to +.4 V.
11 N.C.
12 N.C.
13 Start program A. Momentary contact closure to ground to start.
14 Start program B. Momentary contact closure to ground to start.
15 Start program C. Momentary contact closure to ground to start.
16 Start program D. Momentary contact closure to ground to start.
17 Stop program ABCD. Momentary contact closure to ground to stop.
18 To speed control.
19 To speed control.
20 Memory digital output. Do not use for keying transmitters. Output is high as transmitter is keyed. Logical 1, +2.5-5.25 V. Logical 0, 0 to +.4 V.
21 DC volts input. +4.75 V to +5.25 V.
22 Digital Ground.

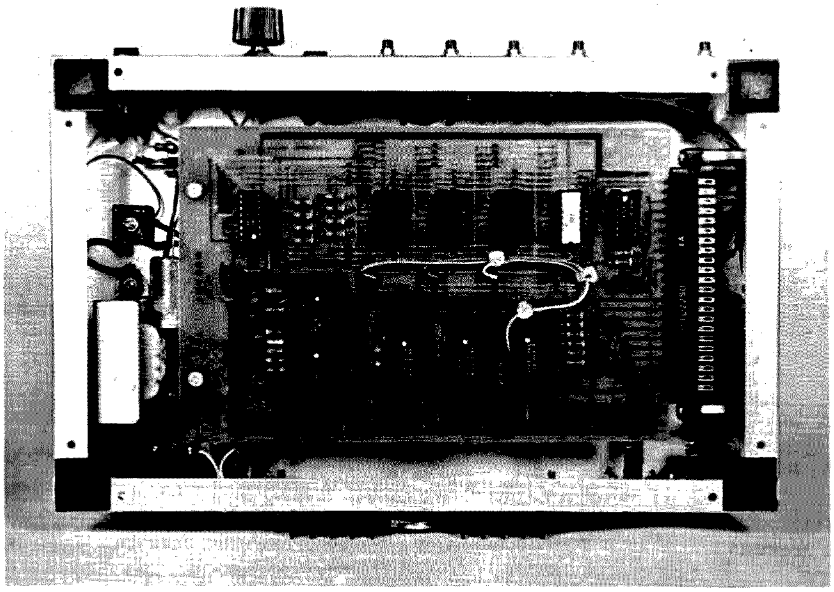

This PC board is the prototype version. The revised board has two additional jumpers. The filter capacitors are mounted under the circuit board. C3 is partially visible. C5 and C6 are connected directly to U12 and are not visible.

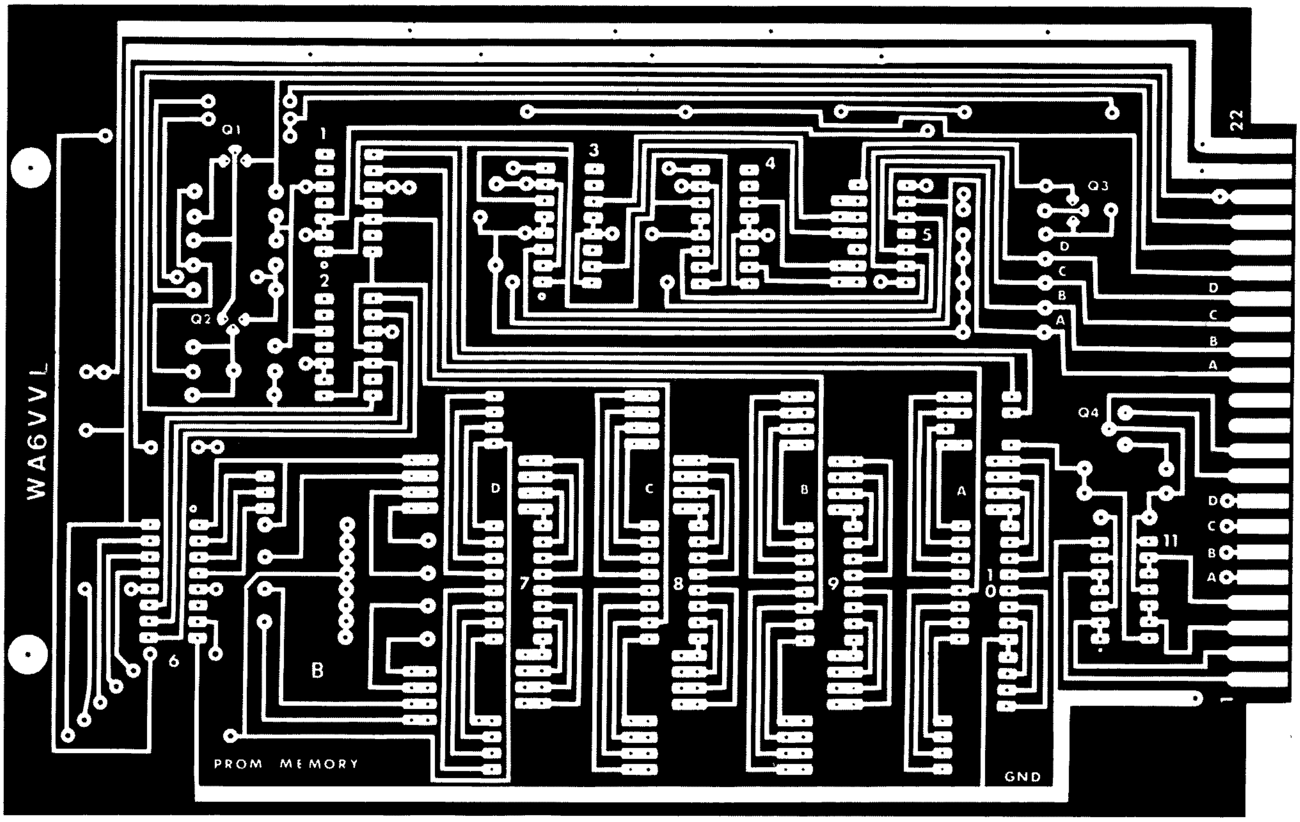

Fig. 4. PC board (full size).

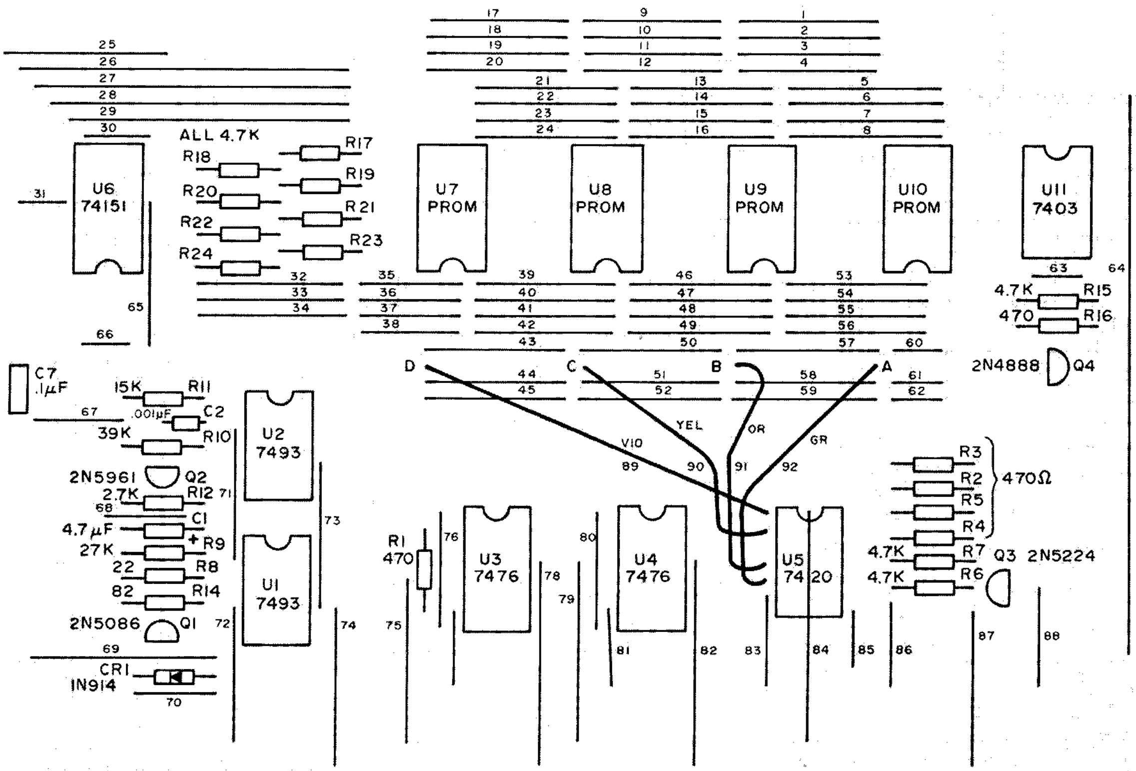

Fig. 5. Component layout.

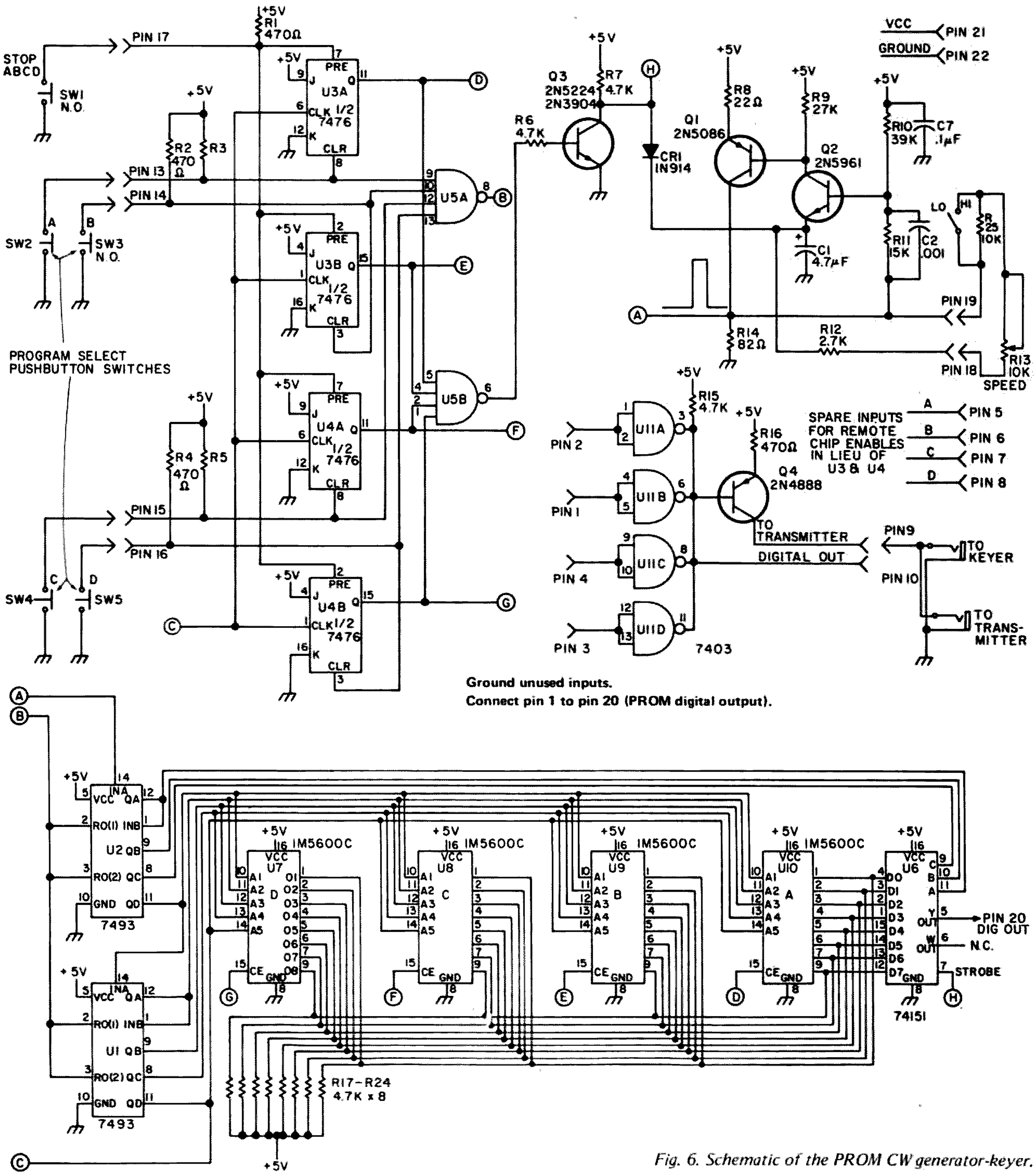

Fig. 6. Schematic of the PROM CW generator-keyer.

Conclusion

The memory described here has been designed specifically for my CW operating habits. Many variations in construction, chip enable and address circuitry, memory size (bits), and PROMs are possible.

Using my board, total construction costs should not exceed $60.00 assuming the reader had to purchase all the parts. Approximately 40% of the cost is for the PROMs.

I would like to thank Alan Burgstahler WA6AWD for providing negatives and prototype circuit boards while developing the memory. ■

References

[1] James Garrett WB4VVF, "The WB4VVF Accu-Keyer," *QST*, August, 1973, pages 19-23.

[2] Designing with TTL PROMs and ROMs from Texas Instruments, Bulletin CB-162.

Additional References

The Weatherford Universal P/ROM Programming Center, Bulletin W-2123. Weatherford, 6921 San Fernando Rd., Glendale CA 91201.

Intersil IM5600C Data Sheet.

Intersil IM5600 Reliability Evaluation Data Sheet.

The TTL Data Book For Design Engineers, Texas Instruments Incorporated.

Fred R. Goldstein WA1WDS
43 Union St.
Peterborough NH 03458

AM is not Dead -- It Never Existed at All

Over the years, amateurs have used various modes of transmission. In the past, the rules and regulations specifically permitted types of modulation on certain frequencies. Unfortunately, these rules made unclear the actual facts relating to modulation. Best use of the spectrum requires that we select our modes of transmission carefully, and to do this we must understand their characteristics.

The simplest is AM. When radiotelephony was invented, it utilized amplitude modulation. This mode was erroneously believed to consist of the varying of transmitted carrier power in step with the audio. Some persons still believe that this is true.

To understand AM, one must simply understand mixers. When two signals are added together in a mixer, the two original signals appear in the output, as well as the sum and difference of the inputs. Thus, if a 1 MHz signal is mixed with a 1 kHz signal, the output consists of four frequencies: 1 MHz, 1 kHz, .999 MHz, and 1.001 MHz.

That is what happens in an AM transmitter. The carrier signal passes through the mixer, as well as the audio signal. The audio is not passed to the antenna, being far too low in frequency. But the sum and difference products do pass, and they are the sidebands that are transmitted. All intelligence is transmitted on the sidebands, and the carrier never varies.

In the receiver, the same process is applied to the composite signal. The sidebands mix with the carrier, producing audible difference frequencies. It is obvious that the carrier serves no necessary function, so it can be eliminated in transmission. The two sidebands are also identical, so one of them can be eliminated, resulting in great bandwidth reduction. The bandwidth of AM is equal to twice the highest modulating frequency. For voice, we assume 6 kHz; the bandwidth of single sideband without carrier is equal to the highest modulating frequency minus the lowest modulating frequency, in this case 2.7 kHz. This permits more stations to occupy the same band.

The carrier signal is regenerated in the receiver when suppressed carrier is used. If one transmits carrier, it will show up as an audible note on any AM signal it is near. This heterodyning caused tremendous interference when AM was the dominant mode of transmission, and plagues today's CBers. It is especially disturbing when one realizes that a majority of the transmitter's output power is being wasted on carrier. The carrier, in AM, must be greater in amplitude than the sum of the sidebands when 100% modulation is used. Besides causing QRM, the carrier serves to help the transmitter heat the shack and generate business for replacement tubes and power supplies. A "200 Watt" SSB transmitter is far lighter than a "200 Watt" AM transmitter, because of the easier duty cycle.

Frequency Modulation?

More recently, hams have taken to a mode called "frequency modulation." While AM does not actually consist of a varying carrier amplitude, FM is frequently believed to consist of a varying carrier frequency. Once again, many hams have made the same mistake. Modulation consists of the generation of sidebands, not the manipulation of a carrier wave.

How wide is FM? The bandwidth of double-sideband AM is equal to twice the maximum modulating frequency. But the bandwidth of FM — *all* useful FM — is greater than the bandwidth of the equivalent AM signal. This is because FM transmission consists of a carrier, *whose amplitude varies*, and multiple sidebands. The higher audio quality of FM, and the superior noise limiting, are due to the redundancy inherent in FM.

Let's examine an FM signal and see what makes it tick. First a couple of terms: Modulation index is the deviation of the carrier divided by the audio frequency causing this deviation. Deviation ratio is the highest deviation divided by the highest modulating frequency. The deviation ratio indicates the maximum deviation actually found.

Deviation? That's a bit tougher to explain. Deviation is the *apparent* variation in carrier frequency, extrapolated from the effect of lowering the modulating frequency towards zero. By itself, it's a far less useful term than we like to think. The carrier frequency of an FM signal does not vary! The average frequency is varied by modulation, just as the average amplitude of an AM signal is varied by modulation, by adding sidebands.

In AM, the two sidebands are in phase. Since they rise and fall together, the apparent frequency of the envelope does not

vary. In FM, the sidebands are out of phase. Either the upper or lower sidebands are more powerful at any given portion of the modulating waveform. Therefore, the average power in the signal varies in frequency.

This phase relationship has some interesting effects. Since the overall amplitude does not change, it is possible to generate as many sidebands as one might want. That means greater redundancy, and redundancy in any system makes for greater fidelity and accuracy. The carrier power is distributed among the various sidebands, and reaches zero at several values of modulation index. One can measure the deviation of a wideband signal by determining how many times the carrier dips to zero as the modulation is increased.

To determine the relative phase and strength of each sideband, one looks at a mathematical concept called a Bessel Function. Looking at the Bessel chart, one can tell which sideband is doing what, when. Each significant sideband begins to come up rapidly at a given index. One could use the chart to determine the bandwidth of an FM signal, if the modulation index and frequencies are known. An easier way is to approximate: Bandwidth equals twice the deviation plus twice the maximum modulating frequency. Don't forget that last half like the FCC did!

The phase relationship between sidebands is complex, but one feature is fairly easy to understand. The phase of the odd-numbered sidebands is different between the upper and lower sides of the carrier, while even-numbered sidebands are in phase with each other. AM signals have only one set of sidebands, the first (odd-numbered), and they are in phase. That is a crucial difference, which becomes important in phase modulation.

Phase modulation is similar to frequency modulation, but there is one major functional difference. The frequency response of FM is linear, with equal amplitude tones producing equal deviation. PM has a rising audio response, with higher frequencies generating more deviation, at a rate of 6 dB/octave. PM deviation is directly proportional to modulating frequency.

Phase modulation can be used as FM if the audio response is corrected. Communications FM, such as hams use, is actually PM in most cases, with an audio response that rises within the speech range. This is called pre-emphasis. Most FM systems use some pre-emphasis. With broadcasting, it is set to begin at about 400 Hz, and rises to about 17 dB at 15000 Hz, the high end. Even tape recorders and phonograph disks use pre-emphasis, because noise is linear with regards to frequency, and thus most of it is in the treble range. Receivers incorporate de-emphasis which restores the tonal balance while reducing the noise.

Pre-emphasis is needed with FM for another reason. Since the quality of reception is dependent upon the modulation index, and the modulation index falls as the modulating frequency rises, pre-emphasis helps keep the treble range index high enough to overcome noise and interference.

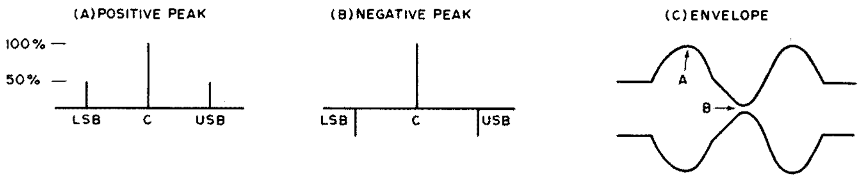

Fig. 1. AM sidebands vs. effective envelope. Direction of sideband indicates phase.

One great benefit of FM's redundancy is the capture effect. A signal will completely cover a weaker one on the same frequency once the capture ratio is attained. This works with noise too; a "full quieting" FM signal can be just 3 dB stronger than a totally unreadable one with a good detector and a deviation ratio of about 5, which is the broadcast standard. But if the deviation is reduced, the capture effect lessens. Narrowband FM such as is used on 2 meter repeaters has very little capture effect, with its deviation ratio of 1.6 or less (5 kHz deviation and 3 kHz modulation).

But phase modulation reveals how similar narrowband FM and AM really are. One can generate PM by actually shifting the phase of a carrier. One radian of shift equals a modulation index of 1, but in practice only about half that can be achieved with a phase modulator, and undistorted broadcast quality must have less shift. If we accept that a phase modulator only produces enough shift for one set of significant sidebands, we can use the Armstrong method of modulation, developed by the inventor of FM, Major Edwin Armstrong.

Armstrong knew that PM and AM differed mainly in phase relationship, so he generated a double sideband signal in a balanced modulator, shifted it ninety degrees, and reinstated the carrier. The result, provided the carrier was strong enough, was PM. This system has been used in broadcast transmitters, but the amount of frequency (and hence, deviation) multiplication needed is very great. For wideband use, direct FM is easier. Note that there is no pretense of shifting the carrier frequency with the Armstrong method. What slight amplitude modulation results is quickly lost in the Class C multipliers needed. Try feeding AM into Class C multipliers, but not with an antenna!

FM Reception

The simplest way to receive AM is with a diode demodulator. The best way is with a synchronous detector, which takes advantage of the redundancy of the two sidebands, but that practice is not yet common. Diode detectors don't work with FM, since the sidebands all cancel each other's amplitude variations and beat frequencies. Thus, to detect FM, a different system was invented. The most common is the discriminator.

The discriminator compares the amount of signal above the center frequency with the amount below the center frequency. The resultant voltage reflects the modulation. Whether there are sidebands or a swinging carrier does not matter here. The ratio detector is a variant of the discriminator that automatically cancels amplitude variations, such as AM and noise. Both forms are common.

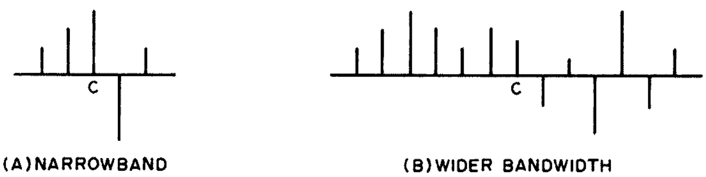

Fig. 2. Narrowband vs. wideband FM.

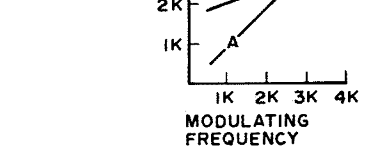

Fig. 3. Modulation frequency vs. deviation. (a) Phase modulation. (b) Direct FM. (c) Compromise pre-emphasis.

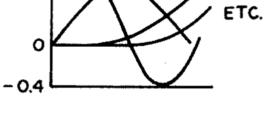

Fig. 4. Bessel function showing amplitude and phase of various sidebands.

One newer way is to use a phase locked loop. The PLL is a necessary part of an AM synchronous detector, where its advantages are drastic over the older diode system. With FM, the PLL detector attempts to lock an oscillator onto the frequency of the input, which appears to vary as the average of the sidebands swings back and forth (it acts almost as if there really were a swinging carrier). The important advantage is that a PLL need not receive the entire FM signal, but only the first two sidebands on each side. It will then have enough to lock onto. By receiving a wideband signal as if it were narrowband, the receiver can slice out noise and interference among the outer sidebands, at the expense of wideband's quieting. A PLL detector also inherently tracks drift with less distortion than a discriminator, without an automatic frequency control circuit.

So What's CW?

We have already seen that the carrier does not vary in amplitude when we transmit AM, and that the carrier does not vary in frequency when we use FM. Let's apply our understanding of AM type A3 telephony to type A1 telegraphy — good old CW.

CW is a form of AM, and thus has a bandwidth and sidebands. The sidebands are generated by the keying, since a change in effective amplitude necessarily causes sidebands. The bandwidth of a CW transmitter is determined by the key click filter. If the transmitter's rise time is short (sharp keying), there may be clicks, which are wider sidebands than necessary. If the rise time is made very long, the dits will get mushed with fast code. Contrary to common belief, keying speed does not affect bandwidth. Potential keying speed does, and a Novice probably shouldn't use as little keying filtration as a fast brass-pounder.

Now for the clincher: Since CW is a form of AM (modulated by squared waves, so to speak), it follows that keying (modulation) should not affect the carrier. Here's a logical sequence, all of which is true in its own way:

1. In conventional full-carrier AM, the amplitude of the carrier is not affected by modulation. Sidebands are generated which carry the information; the composite amplitude of the carrier plus sidebands varies by the addition and subtraction of carrier and sidebands.

2. Assume series-gate AM transmission (grid modulation). When the modulating waveform is at its most negative, the modulated grid reaches the point of zero tube output. At its most positive, the tube reaches maximum output. This system produces a carrier and sidebands as per above.

3. Assume a square wave is fed into the modulated stage. During one half the cycle, the tube is entirely cut off; during the other half, the tube conducts completely. The ironclad rule of AM — carrier unmodulated by sidebands — still stands; the high harmonic content of the square wave produces broad sidebands. Softening the waveform by the addition of a low-pass filter to the modulation reduces the width of the sidebands.

4. Replace this square wave with a telegraph signal. There are still sidebands and an unaffected carrier, even though the tube is cut off during part of the waveform. This is common grid-block keying CW. Even with the key up, the carrier is still there!

Now you know as well as I do that when a key is lifted, the carrier goes away, right? But put in a *narrow* CW filter, say 40 Hz, and key rapidly. It will be noticed that the keying is softened if not obliterated by the "ring" in the filter. This ring can be reduced by proper filter design, but a certain amount is inherent in any given bandwidth, because the higher order sidebands are being cut off by the filters! If one were, theoretically, to narrow the bandwidth to a fraction of a Hz, the signal would ring for several seconds. Narrow the filter infinitely, and the carrier remains infinitely present. The sidebands are close to, and out of phase with, the carrier.

In case you're thoroughly confused, just remember that a carrier wave is really only a mathematical concept, and like most mathematical concepts, carries very little intelligence to most of us! ■

Louis Berman K6BW
Department of Physics
University of San Francisco
San Francisco CA 94117

Is Extraterrestrial Communication Possible?

For all we know, CQs may be coming our way, unbeknown to us, by sophisticated communication techniques beyond our comprehension, just as the New Guinea natives who communicate with drums are unaware of the international radio traffic passing over their heads . . .

Throughout human history the art of long-distance communication by audible, visual, or electromagnetic methods has played an important role in advancing the culture of the human race. When Homo erectus emerged from the mists of antiquity a couple of million years ago, his upright position freed his hands for the delicate manipulation of tools and led to the development of a larynx and speech box that set him apart from all other animals. One can imagine early man communicating over distances with his brethren by means of strident calls, and his successor, Homo sapiens, by means of fire or smoke signals, drum beatings, sunlight flashes from shiny objects, and other primitive methods.

It was not until a century ago that man's effort to overcome great distances by rapid communication succeeded with the advent of telegraphy. In that same century a few adventuresome dreamers had already set their sights much farther out. Among the elaborate schemes that had been concocted to signal our presence to other worlds in the solar system were the following: the planting of a ten-mile-wide strip of pine trees in Siberia in the form of a right triangle; a twenty-mile circular ditch filled with water over which kerosene would be poured and set afire; a powerful concave mirror that would focus sunlight on Mars and burn simple numbers in the desert sands of that planet; a network of large sunlight-reflecting mirrors stategically positioned in several European cities to conform to the configuration of the Big Dipper in the constellation Ursa Major as a sign of intelligence on earth.

In 1899 the eccentric electrical pioneer, Nikola Tesla, undertook to transmit a powerful electrical signal into space from his Colorado laboratory and to detect any possible replies. He employed a large primary coil 75 feet in diameter and a 3 foot copper ball mounted on top of a 200 foot tower. He figured that powerful alternating surges of electricity introduced into the copper ball and into the ground would interact with the earth's magnetic field to increase the power of the radiated signal. Although there were no extraterrestrial responses to his efforts at the time, it was reported that incandescent lights were set glowing 26 miles away. A year later he claimed to have picked up interplanetary signals.

In 1921 Guglielmo Marconi believed he had detected regular pulsed signals from outer space in the high meter band while conducting atmospheric tests aboard his experimental yacht, the Elettra. In 1924, when Mars was closest to the earth (35 million miles), the astronomer David Todd arranged to have the U.S. government's high-powered transmitters turned off every five minutes before the hour between August 21 and August 23. During these five minute silent intervals he used a special receiver tuned between 50 and 60 kHz to record on tape any signals coming through. Out of a hodgepodge of dots, dashes and jumbled code groups, which he and listeners throughout the country heard, nothing definite could be ascribed to an outside source. Today we know that such very low outer-space frequencies are reflected back into space by the ionosphere.

Throughout the following quarter century interest in extraterrestrial communication more or less lapsed until the growth of radio astronomy after World War II. As radio telescopes grew in size and observing techniques improved, the time seemed opportune to speculate once more on the feasibility of detecting extrasolar signals from intelligent sources in space. In a September 19, 1959 issue of the prestigious British scientific journal *Nature,* physicists Giuseppe Cocconi and Philip Morrison

presented logical reasons for instituting a search to detect artificial signals in outer space with large radio telescopes. They concluded that the probability of finding any was difficult to estimate, but if we never search, the chance of success is zero.

In 1960 the first modern attempt to look for artificial signals in space was conducted by Frank Drake at the National Radio Astronomy Observatory in Green Bank, West Virginia. This was the famous *Project Ozma* named after the legendary princess in the imaginary land of Oz. The 85 foot radio dish was pointed, when time permitted, in the direction of two relatively close solar-type stars, Tau Ceti and Epsilon Eridani, about eleven light-years distant. After 150 hours of unrewarded observing from May through July, the search was abandoned.

In 1967 there was a brief flurry of excitement when the first pulsar was discovered. Perhaps "little green men" were trying to contact us with their very precisely-timed pulsed radio signals. We have since found over one hundred pulsars in different parts of the sky flashing radio pulses up to thirty times per second. They are the natural consequence of certain stars that have gravitationally collapsed after exhaustion of their available nuclear fuels into small, rapidly-spinning, highly-condensed objects emitting beamed radio pulses which the earth intercepts.

In the ensuing years there have been a few sporadic attempts undertaken to detect artificial signals in outer space, particularly since 1972. So far several American and Canadian radio astronomers have been unable to locate anything resembling intelligent coded signals from a number of nearby sunlike stars. Neither have attempts by two groups of Soviet astronomers, seeking pulsed intelligent signals over the entire sky from any source, been successful to date. The most unusual search in progress is that conducted with the Arecibo 1000 foot radio telescope in Puerto Rico. Here several nearby galaxies with their billions of stars are being monitored intermittently on several microwave channels. There are presently too many other immediate and rewarding uses of radio telescopes than to spend time looking for coded extrasolar signals with little hope for success.

It would seem that 1420 MHz is a logical search frequency of universal significance. It is the emission frequency of the dark, neutral hydrogen clouds that outline the spiral arms of our galaxy. This frequency happens to lie in the quietest terrestrial portion of the microwave spectrum between 3 and 30 centimeters where the effects of atmospheric absorption and cosmic background noise are at a minimum. If other galactic inhabitants are also surveying the hydrogen distribution in the galaxy, their receivers and ours, tuned to the same spectral region, might offer the best chance of the successful receipt of coded transmissions around the hydrogen-emitting frequency. However, it is conceivable that an advanced galactic society, desiring to leave this channel open for exploration of the galactic structure just as we do, will not beam CQs on or near this frequency. A more suitable communication frequency might be the microwave region between the emission lines of hydrogen (H) at 1420 MHz and hydroxyl (OH) at 1668 MHz observed in the interstellar clouds of our galaxy. This microwave section has been called the *water hole* because H and OH are the dissociation products of water (H_2O). If water-based life is prevalent elsewhere, it might be natural for advanced societies to employ a precise frequency related to the center of mass of the water molecule. This communication frequency lies at 1652.42 MHz.

We must remind ourselves that we are tyros in the communication enterprise. For us, passive listening is presently far more advantageous than active beaming which requires enormous expenditures of energy. Obviously, if there are no civilizations with the will to transmit as well as to receive out of the hundreds of thousands that presumably exist in our galaxy of several hundred billion stars, interstellar communication will never materialize. For all we know, CQs may be coming our way unbeknown to us by sophisticated communication techniques beyond our comprehension, just as the New Guinea natives who communicate with drums are unaware of the international radio traffic passing over their heads. The acquisition of a message obviously is the most difficult part in establishing an interstellar dialogue. Once acknowledged and replied to, assuming we can decipher it, arrangements can be made with respect to channels of operation, power requirements, and communication modes for the proper exchange of knowledge between two galactic cultures, even if this takes centuries.

Project Cyclops **involves an array of some one thousand 100 meter dishes spread out over a circular area ten miles wide at a cost of 10 billion dollars, about one-third the cost of the manned missions from Mercury to Skylab. The installation would be capable of intercepting coded beacon signals from civilizations out to 1,000 light-years . . .**

Our first active attempt to beam a message to a distant stellar outpost was made in November, 1974. The newly-resurfaced 1000 foot radio dish at Arecibo, Puerto Rico focused a 450 kilowatt, binary-coded, beamed signal in the direction of the great globular star cluster in Hercules. Even though its distance is 24,000 light-years, this object was chosen because the beam width of the arriving signal 24,000 years from now would just span the diameter of the cluster, thus wasting no power; secondly, there might be a sufficient number of civilizations out of the million stars in the cluster capable of intercepting the "astrogram." The binary-coded message contained information about the earth's biology pertaining to the composition and structure of the DNA molecule, the human population, an inventory of the solar system, and a schematic of the radio telescope that beamed the coded signal.

Lastly, there remains for discussion the most grandiose project of all: the Cyclops system of communication proposed by Dr. B. Oliver, a vice president of the Hewlett-Packard Company. *Project Cyclops* involves an array of some one thousand 100 meter dishes spread out over a circular area ten miles wide at a cost of 10 billion dollars, about one-third the cost of the manned missions from Mercury to Skylab. The installation would be capable of intercepting coded beacon signals from civilizations out to 1,000 light-years, or eavesdropping on the radio leakage from local transmissions broadcast by communicating societies up to distances of 100 light-years. The array could also be used to radiate directional signals with extremely narrow beam

lobes. A large fraction of its time would, in addition, be devoted to investigations of natural radio sources on the sky. It is estimated that within 1,000 light-years there are some 1.7 million suitable stars. By "suitable" we mean solar-type stars which possess sufficiently long life spans to permit the slow, orderly biological planetary evolution of an intelligent species. For example, our sun is about 4.5 billion years old and biological evolution on earth required about 3.3 billion years to produce modern man. Under the optimum conditions wherein interstellar beacons operate continuously and we can monitor all likely channels simultaneously in the microwave region with a receiver having at least one billion outputs, the search could be completed in about 30 years. Otherwise we should be prepared to spend centuries of effort in a project with some chance of success in the distant future.

In the meantime, there remains the slim prospect of serendipitous contact. We might accidentally stumble onto artificial signals being randomly directed our way, intercept signals being exchanged between two other worlds, locate signals between a cruising spaceship and its parent planet, detect signals from an automated probe monitoring our solar system and reporting to its home station or mimicking our communication to gain recognition (an unlikely source of long-delayed echoes), or eavesdrop on a galactic network exchanging information among its member societies. Once interstellar communication is initiated, it will mark the end of our cultural isolation and establish our entry into the galactic club of civilized societies. ■

Autobiography of an Ancient Aviator

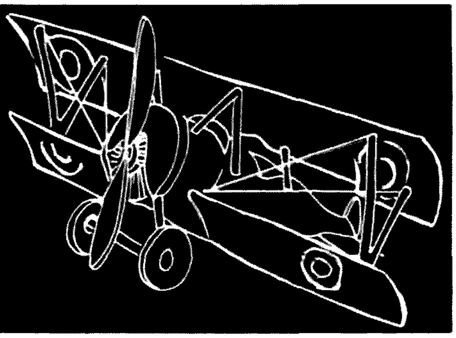

W. Sanger Green
1379 E. 15 Street
Brooklyn NY 11230

MORE DEPARTMENT OF COMMERCE STUFF

Last month I told you about my official headquarters being changed from Washington to Philadelphia. It was much better than traveling out of Washington for 30 to 40 days without seeing my family. So, as I told you, the first thing I did after receiving the assignment was to move my wife and Wayne to Philadelphia.

In those days there were only three classes of pilot licenses: Transport, Limited Commercial and Private, each with its limitations. All required a written examination and a flight test. It was up to the applicant to furnish the airplane for his flight test. If the flight test was in a dual control ship, I'd ride with him to see how much he slipped and skidded on his turns, figure 8s, 180s and 360s – in other words, to see whether he was flying the ship or the ship was flying him. Also, I very seldom licensed an airplane without test flying it myself. I had three inspectors assigned to my region, so the first thing I did was make up a schedule of dates and places where one of us would be available to inspect aircraft and to examine and test for pilot and mechanic licenses. This was sent to all the active airports in the region and to all applicants.

On one of my trips to the Richmond Flying Field I had an application for a license for Roscoe Turner's "Flying Cigar Store" ship. If I remember correctly, it was a large single engine biplane that, I believe, was an early Igor Sikorsky stick and wire job. It was very well built and, according to Roscoe, was very nice to fly. It had to be good since the runway he operated out of, across the field from the Pitcairn hangar, was only about 30 feet wide and had deep ditches on each side. At that time Roscoe had a pet crow that he took everywhere with him. The crow had a habit of picking up anything that was shiny such as a wrench, pliers, etc., and hiding it. What fun. As you may possibly remember, Roscoe was always dressed in smart uniforms. I asked him where he got them and he said that his wife designed and had them made for him. Anyway, uniform or not, Roscoe was an excellent pilot.

In late 1927 and early 1928 I spent quite a little time based at Langley Field, Virginia. I was stationed there in 1925, so I still had a lot of friends there. They put me up in the B.O.Q. (Bachelor Officers' Quarters) and, for a very nominal fee, fed me at their mess. The NACA (National Advisory Committee for Aeronautics) very kindly hangared my plane. Quite a few of the pilot personnel at Langley and at the Naval Air Base at Norfolk wanted to qualify for civilian pilot licenses, so I processed their applications. Also, some of the "Non Coms" and Specialists qualified for airplane or engine mechanics licenses. The NACA had quite a stable of planes in their hangar, some of which they were nice enough to let me fly. For my money, their Fokker D7 was the best handling ship of the lot. Tom Carrol, an old friend of mine, was chief test pilot for the NACA at that time.

On the morning of the 15th of November 1928, I answered the phone at my office at the Philadelphia Airport and heard someone say, "This is the White House Vacuum Cleaner Department" (Hoover was then the Secretary of Commerce). I knew right away that it was Ralph Lockwood, the Supervising Inspector in Washington and my boss. I asked him why he was wasting the taxpayer's money on long distance phone calls. He said they had a problem and needed my help. He said, "You know that nice new Stearman we have in our Bolling Field hangar?" I said, "Yes." "Well," he said, "Clarence Young (Chief Air Regulation Division, and Lockwood's boss) is going to make a tour of Europe next month and wants to take the Stearman along. However, in order to do this, the ship needs some additional instruments and a radio installation that can only be done at the Stearman factory in Wichita. So Clarence wants you to ferry it out and back." I told him that it would be sort of difficult for me to get away just then as we had just raised the price of an untested pilot license to $100 and the price of covering up a dry rotted longeron to $150, and we were busy running to the bank. His answer was for me to throw a couple of shirts in my flight bag and fly down to Washington that afternoon. They would have the Stearman on the line, all gassed, warmed up and ready to go first thing in the morning. Well, an order is an order – so I complied.

Instrumentation in most civil aircraft in those days was pretty sketchy. Many were equipped with only a compass, altimeter and air speed indicator, some with a turn and bank indicator. This was about the story for flying and navigating instruments. The Stearman had all these for the outbound trip plus a rate of climb indicator and radio on the return trip. An 1100 to 1200 mile cross-country trip, especially if it was not over established airways, was a bit more complicated in 1928 than it is now. To be sure, there were airway strip maps to be had, but once you were off those, the Rand McNally state maps were about the only maps available. So you drew your flight line on the state maps and tried to follow it. Following railroads in mountainous country was not recommended as they sometimes went into tunnels without warning. A combination of visual and compass navigation was what I generally used.

The trip out was normal for late November – high head winds, snow, sleet, etc. I had to make an unscheduled landing and overnight at Terre Haute because the ground was getting a little too close. There were a lot of heavily flooded areas between Anglum and Kansas City, and snow from there to Wichita. Upon my arrival, I phoned Stearman and told him I had arrived with the package he had been expecting from Clarence Young. He said he'd send a pilot to take the ship over to his postage stamp sized factory landing place. It took them four days to do the work on the ship. Then, while I was testing it, prior to returning to Washington, the lever controlling the horizontal stabilizer let go and put me into a dive I couldn't control with the elevators. I lost about 800 or 900 feet before I realized what had happened and I corrected it just in time. All I had to do was to pull the stabilizer control lever up and hold it with my left hand while I operated the control stick and throttle with my knees and right hand to come in for a landing. It didn't take Stearman more than a couple of hours to make the necessary repairs, so I was on my way by noon.

I got back to Washington the afternoon of November 24th just in time to jump into my Travelair and make Philadelphia before dark. ■

W. G. Moneysmith W8KUT
21740 Military
Dearborn MI 48124

5/8 Wave Power for Your HT

The majority of the commercially made two meter FM hand-held transceivers today have 1 or 2 Watts output into quarter wave antennas or rubber ducks. There are many times when an FM operator would like to have a little more gain to work out better from poor locations. This article describes a tunable 5/8 wave telescopic antenna to use with a rig such as the Drake TR-22 transceiver.

The antenna design is not a new one. However, the adaptation for use with portable equipment and base stations is novel. It basically consists of four parts: (1) a 44" or 45" telescopic transistor radio replacement antenna rod; (2) acrylic 1/2" OD, 1/4" ID, 2-1/2" long plastic insulator; (3) a 4 turn coil and an NPO 3-12 pF ceramic trimmer; (4) PL-259 coaxial connector. Use with the TR-22 transceiver requires an additional 90° elbow, a barrel connector and a double male connector.

Construction of the antenna is a little unusual, but can be done easily in about an hour. First, with the 2-1/2" acrylic rod, drill a 5/16" hole, 1-1/2" into the center of the rod tube. The metal telescopic rod will fit into this later. Next, prepare a 1" by 1/4" wooden dowel rod. Drill a small hole through the end of the dowel to pass a center conductor wire. Glue the wooden dowel into the bottom of the plastic insulator tube and drill a small angular hole through the side of the plastic rod to coincide with center hole of the dowel. Solder a 3" piece of center conductor from RG-58 coax to a PL-259 coaxial connector. Fish the loose end of wire up through the wooden dowel and out the side of the plastic insulator. Next, fill in the PL-259 connector with epoxy and set the wooden dowel into the connector. Be sure to pull the center conductor wire as you work the dowel into the epoxy. Let epoxy set up until hardened. Next, wind a coil using #12 copper wire (1/2" ID, 4 turns). Bend the ends of the coil and leave plenty of excess wire to make the hookup. Position the coil over the plastic insulator and slide it down until the first turn reaches the PL-259. File off the chrome plating from a spot on PL-259 and solder the bottom end of the coil. Solder to the coil the center conductor wire coming through the side of the plastic insulator, at 1 turn from the grounded end.

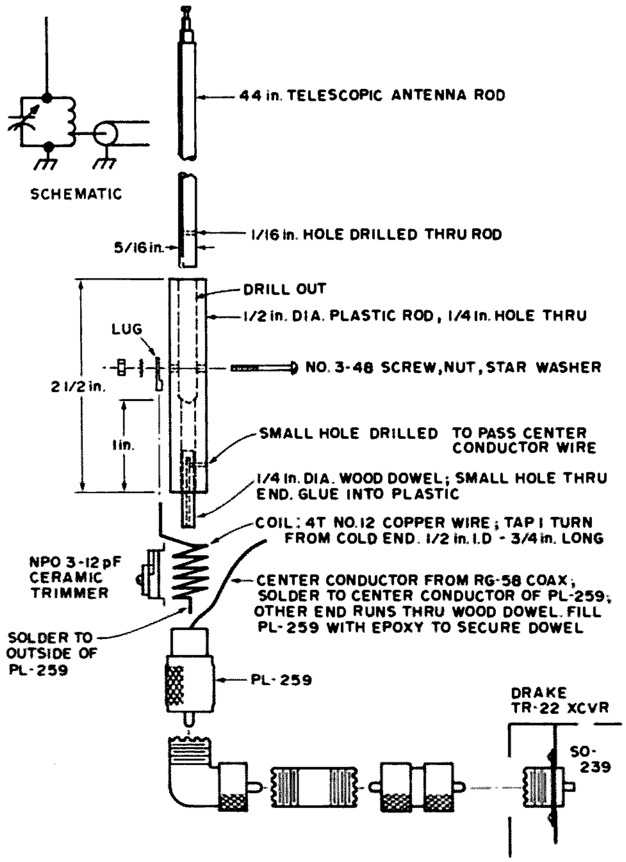

Fig. 1.

Insert the 44" telescopic antenna rod into the top of the insulator. Drill a 1/16" hole through the insulator and antenna rod. Secure with a #3-48 screw, nut, star washer and lug. Solder the

top end of the coil to the lug and tighten it down. Finally, solder an NPO 3-12 pF ceramic trimmer between the top and bottom of the entire coil. Extend the antenna rod to full length and check for rigidity. This completes the construction.

With a Drake TR-22, an additional 90° elbow coaxial connector, a barrel connector, and a double male connector must be used to adapt the antenna to the TR-22 coaxial S0-239 output connector at the rear of the unit.

Tune-up procedure is very simple; there are two ways. First, using a field strength meter in close proximity, key the transmitter and adjust the NPO capacitor with an insulated tuning wand for maximum meter indication. Or, while listening to a weak signal, adjust the NPO capacitor for maximum S-meter indication. Both methods are with the antenna in place and the rod fully extended.

The antennas constructed thus far have been very effective, with increased receive and transmit gain over the built-in quarter wave type antennas. Many repeaters in excess of 35 miles have been worked using this antenna and a 1 Watt rig. It is very useful in the home and shop, and at picnic outings and other portable locations. It is a fun little antenna to build and can be used not only for hand-helds but also for Regency HR-2 type rigs, too. Those who have the problem of no antenna allowed outside can use this antenna and have many surprising results, especially from the second floor of a structure. In most cases it will mount on the S0-239 at the rear of the rig. Be sure to re-tweak the NPO capacitor when changing rigs for optimum performance! ■

David J. Brown W9CGI
RR 5 Box 39
Noblesville IN 46060

Gone in a flash... -STROBING- ...Only to return

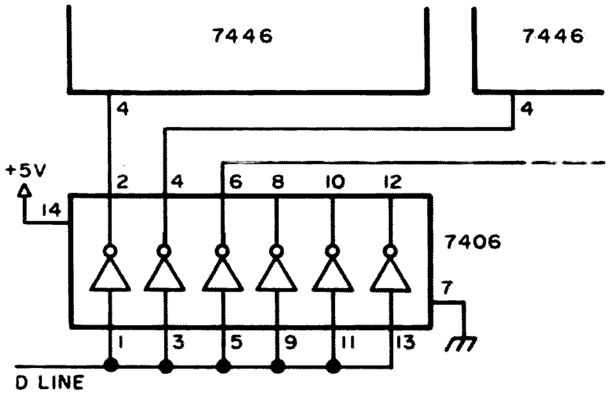

Fig. 1.

Having just recently read an article by WB4DCV in the Nov/Dec 1975 issue of *73 Magazine*, and another by WB2DFA in the Jan 1976 issue of *Ham Radio*, I thought it might be timely to write up some of the ideas used around here for strobing and general control of displays. If I didn't strobe or timeshare some of them, I could not afford my light bill each month.

While this is not a construction article, it might help some of your present or future projects. Since nearly all digital projects do their "thinking" in a binary or BCD code, a transition usually occurs somewhere in an IC (or ICs) that converts this code to the required seven-segment code and the readout numbers we understand. Further, this generally occurs in a 7446, 7447, 7448, etc., family IC or CMOS equivalent. These little multipin "black boxes" more often than not have a group of gates that seem to get overlooked quite often. Blanking, strobing, etc., are the very reasons these gates were built into the IC, so it is a shame to overlook them at the expense to our pocketbooks!

There are two pins on most of these ICs, referred to as the ripple blanking output (RBO) and the blanking or ripple blanking input (RBI) lines. Hooked together properly, these pins can be used to blank out what are called the leading zero figures on a display, or the zero(s) preceding the actual number desired (i.e., the *00*123 in the number 123). Another example: In a 5 digit counter like the K2OAW counter that I wrote up some additions for earlier (*73 Magazine*, June, 1973), a very worthwhile further addition can be realized by using these RBO/RBI lines wired properly for the leading edge zero blanking. By tying pin 5 of the most significant digit (left figure as viewed by user) IC SN7446 to ground, then tying pin 4 of the same IC to the next lesser significant figure IC SN7446 pin 5, and carrying pin 4 of one IC to pin 5 of the next IC to the right, on down until only the right-hand pair of digits (their 7446s) are not modified, you will blank all zero figures to the left of the right-hand pair. Examples: 00001 will read 01, 00011 will read 11, 00111 will read 111, 01111 will read 1111, and 11111 will read 11111. If 10001 is the number, then 10001 will read out. Only insignificant zero figures are deleted and blanked. Leave at least two right-hand digits unaffected in order to tell that the counter is indeed running and working.

Also, in a switched range counter such as the K2OAW model, always begin by counting in the upper range. This avoids the obvious errors that could occur using the zero-blanked version (i.e., 1,140,003 Hz on lower range reads as 03 Hz). I doubt anyone looking in a place for 1 MHz signals would buy the 03 Hz answer, but, done in high range first, he can't go wrong, getting first a 1140 (zero of 01140 blanked) answer, to which he adds the 03 for a 1,140,003 correct answer.

The blanking arrangement is easily defeated by a switch (if so desired) for high frequency measurements over, in this case, the low range limit of 99,999 Hz. Especially in audio measurements in most model counters, it is much easier to read 420 Hz or 1200 Hz, etc., than 00420 or 01200.

To get back to strobing, these same blanking lines can be controlled by ripple through counting devices as in the WB4DCV article (a 7490 to 7441 pair), and the blanking lines will perform the "strobe" function by sequentially blanking or unblanking a readout tied to that particular IC. Since the

exact seven-segment decoder used may require the opposite polarity than that provided by the 7441, the outputs from the 7441 may be tied to the inputs of hex inverter ICs to reverse the "sense" of the outputs (two ICs being required, with two gates or inverters left over). Just remember, to get true strobing where only one number is on at a time, make sure your outputs (from 7441 or inverters) cause all numbers to be off except the one to which the counter (7490) has driven the 7441. Note the following example.

It is further recommended that, on a 5 digit counter like the K2OAW model, the blanking lines be tied to all the decoder even or odd number outputs (or their inverted not-lines for some seven-segment decoders) of the 7441 decoder. This allows the following sequence in an all-tied-to-odd-lines version (7441 positions): (0) no lights on – NLO; (1) one light readout) on – OLO; (2) NLO; (3) OLO; (4) NLO; (5) OLO; (6) NLO; (7) OLO; (8) NLO; (9) OLO – and you have strobed 5 digits (count all OLO positions). Between digits, there is no power drawn, and, in 5 positions of the decoder 7441, only one readout is lit. If you are modifying a present counter, just leave the power supply for the lamps alone after the modification – it will just run cool for long life. If designing a new project, take the reciprocal (1/x) of x number of readouts used, times the current per readout (7 times the per segment figure in a seven-segment device), times two. The times two is a safety feature that should appear as a 1.5 to 2.0 figure in all of your power supply designs, unless you like the smell of smoke (transformers, resistors, etc.).

A recent development of my own may also be of interest. By simply tying the D line output of one of your crystal timebase dividers whose frequency is 100 to 1000 Hz to all inputs of a hex inverter IC (I used a 7406), and tying one each of the outputs to one of the blanking lines of the 7446s, an alternate means of strobing occurs that gives you an 80% reduction in power required. This may be adequate in some applications, and certainly requires the minimum of hardware. In this case all readouts are off 80% of the time, and on 20% of the time, but at a rate faster than you can follow with the human eye, so they appear to be always on (see Fig. 1).

Now some comments on counters in general, and specifically the K2OAW model I have. Mine has been in constant use since I built it over three years ago. One of the modifications I suggested in my original article was (as Peter Stark K2OAW pointed out) contrary to good TTL practice, but the entire counter has worked perfectly as described for over three years now. I have, since writing my article, made some of the modifications to my counter that have appeared in subsequent articles by Pete and others. One of these is the input circuit change by Pete himself in the Nov 1974 *73 Magazine*. This, coupled with the change from a 40673 FET to a 3N200 FET, greatly improved the input sensitivity. If I had it to do all over again, I would make this input circuit a plug-in module of some sort, since I am now building the WB2DFA *Ham Radio* input buffer circuit for comparison. Either way, I will use the input metering circuit of that article, as a little metering would sure be reassuring at times.

I had some months ago changed the first 7473-7490 combination in the counter chain over to a 74196 as in the WB2DFA circuit, and it did indeed count to 63 MHz on mine, using a discrete buffer after the 3N200 to shape the waveform for TTL (instead of the 7413) and a 74S00 for the input selector IC. I have since tried the 74S196 for the 74196 (pin for pin OK), and using the same 74S00 I can count to just over 100 MHz. I have determined that the 74S00 is the limiting factor, and, if you try the same idea, the results may vary from 80 to 120 MHz depending on your choice of 74S00 and 74S196.

I have not laid this out as a construction article, but for those of you who want to see my 3N200 arrangement, etc., on paper, please send an SASE and I'll copy up a sheet or two with all the collective information on it. It's all there for you to dig out of the articles mentioned if you have them.

In a short article like this, a pin-by-pin type of description is impossible, but the above articles and their schematics should straighten out any questions or problems on what I have described. By all means strobe, but don't make a hard job of it when it need not be! ■

By all means strobe, but don't make a hard job of it when you need not!

NEW PRODUCTS

TRICKS WITH ANTENNAS

In our September, 1975 issue, under *New Products*, there appeared a description of a coaxial coupler and a remote control relay by Inline Instruments, Inc. We had installed one of each, and the results made our 2 meter operation and UHF listening much more interesting.

The coupler was inserted inline on the coaxial cable at the transceiver and the relay was clamped to the rotating pole on top of the tower. An omnidirectional vertical was added to the top of the pole and connected to one port of the relay, and the beam was connected to the other port. The existing coax carries the energizing power to the relay, so nothing else had to be added. The plug lead of the 12 volt power supply was run to the injection port of the coupler through a switch, and the antennas could then be selected (Fig. 1). By switching from the vertical to the beam at different angles of rotation, side lobe response, front-to-back ratio, and other reflections were easily noticed by direct comparison. We discovered the true characteristics of the beam.

Being by nature tinkerers, we decided to try other schemes. Our Bearcat III VHF-UHF scanner always had low gain on UHF because of the single VHF antenna common to both bands. The Inline literature showed the relay transfer time to be one millisecond, so it was felt that it should follow the step response time of the scanner. A two transistor interface switch was built up on a vectorboard and installed in the scanner.

The coupler was transferred to the scanner coax line. A UHF antenna and the relay were added to the pole. Both antennas were connected to the relay. The scanner power supply powered the transistor switch and the relay with no problems. The relay easily followed the scanner band transfer and formerly noisy UHF signals became full quieting. There was no audible noise induced by the relay/antenna switching. The life expectancy of the relay is such that even with the high rate of switching it should last for years. Most other scanners use similar crystal and band switching techniques, so the circuit shown should be usable without modification.

Time has prevented more ideas from actually being tried out, but we would like to pass on a few application hints which might suit individual requirements.

First: Repeater antennas can be switched by tone from mobiles or remote points to provide more favorable selected area communication. A timer or second tone can restore normal condition.

Second: Two antennas can be switched in a mobile to offset undesired directional conditions.

Third: Skilled UHF operators can install converters, preamps, or varactor multipliers on the tower near the antenna. Both the accessory power and the rf is supplied via the coax line. A suggested system is shown in Fig. 2. Cable losses are greatly reduced. Note: The relay shown is not a remote control type. Since power is also required at the converter, a second coupler supplies both the converter and relay power for UHF operation.

Fourth: FM communication on VHF-UHF uses mainly vertical polarization. Fixed station to fixed station operation, using simplex frequencies, can communicate over longer distances by using horizontal polarization with minimum interference from mobiles. Horizontal to horizontal and vertical to vertical QSOs can thus be carried on at the same time. A horizontal antenna can easily be added with the use of the subject devices.

It should be noted that coaxial cable is not only costly but adds wind loading and stress to a tower or pole. Maintenance will be reduced and the shack will be neater with less cables.

Installation of the coupler and relay showed no apparent attenuation, noise or change in swr over the VHF-UHF range.

More information can be obtained by writing directly to Inline Instruments, Inc., Box 473, Hooksett NH 03106.

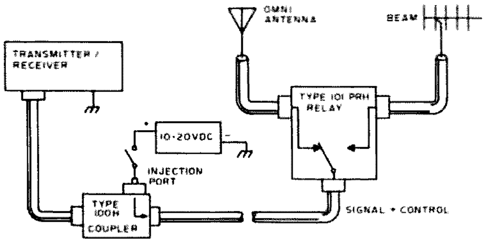

Fig. 1.

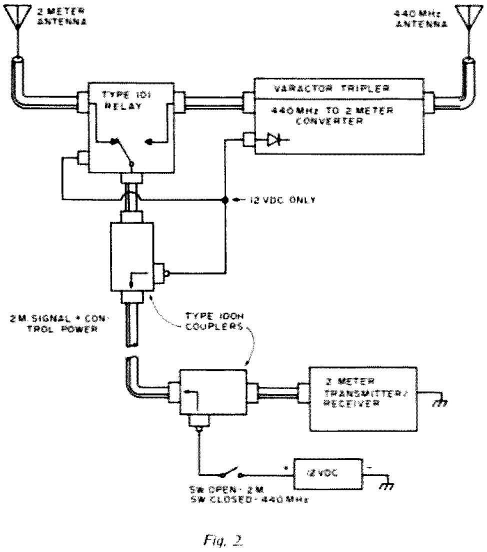

Fig. 2.

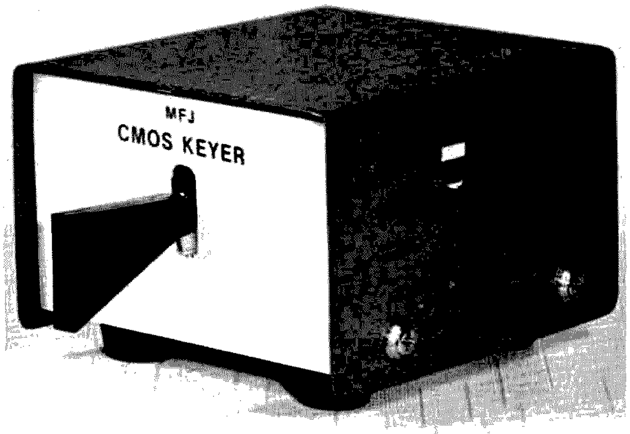

NEW MFJ CMOS-8043 ELECTRONIC KEYER

by Morgan Godwin W4WFL

Except for the omission of the model number on the lower portion of the front panel, MFJ Enterprises' new CMOS-8043 electronic keyer looks exactly like its predecessor, the CMOS-44ORS. However, appearances can be deceiving. Inside, the electronics of the CMOS-44ORS have been completely replaced by electronics based on the Curtis 8043 IC keyer chip. Thus, while retaining all of the features of the older model, the new circuitry provides the additional advantages of 1) dot memory; 2) iambic operation with external squeeze key; 3) variable weight control; and 4) reliable solid state keying for grid block and cathode keyed equipment and solid state rigs.

Completely self-contained in MFJ's standard 4 x 3-1/4 x 3-3/16 inch enclosure, the CMOS-8043 is powered by four penlight cells. The sidetone oscillator utilizes a 2N3904 which provides ample volume with the built-in speaker. Tone and volume are adjustable with internal trim pots. The unit features self-completing dots and dashes with jam-proof spacing and instant start with keyed timebase. Weighting is variable with an internal trim pot. The speed range is adjustable from 8 to 50 wpm with a control on the rear panel. Also on the rear of the unit are the tune-off-on-sidetone off switch and phono jacks for keying output and external paddle. For operation in the iambic mode an external

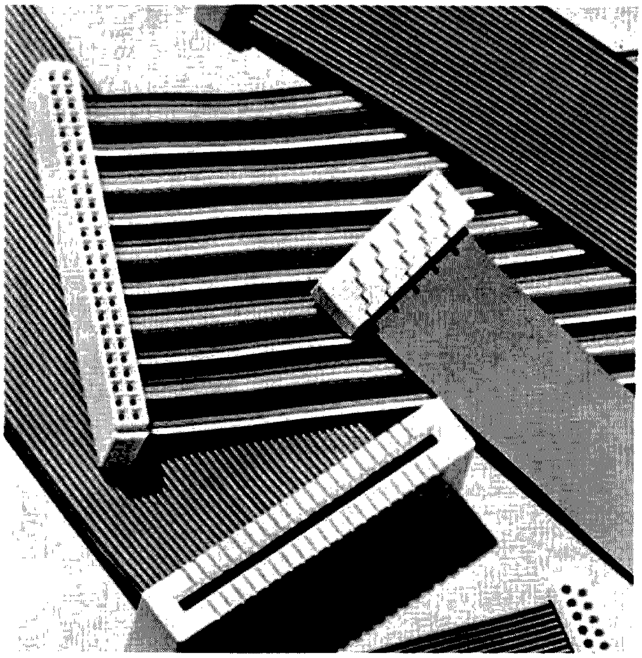

NEW FLAT RIBBON JUMPERS FEATURE MOLDED-ON CONNECTORS AND FACTORY TESTING

Since February, A P Products Incorporated has had a directly interchangeable, fully assembled jumper line that is a cost effective alternate to the customer assembled mass terminated flat cables. In addition, the A P jumpers feature molded-on connectors with strain reliefs and line by line probeability. Relative to cost effectiveness, the Ohio company states that it will supply two fully assembled and tested jumpers for the price of the component parts of a competitive unassembled, untested jumper. This cost advantage is possible because all manufacturing and testing is automated, and lower-cost trinary copper alloy is used as contact material for the flat cable termination.

Three basic end terminations are available – these are socket connectors, printed circuit board connectors, and card-edge connectors. Each of these termination types is offered in the five most standard widely used sizes: 20, 26, 34, 40 and 50 contacts.

With the types and sizes listed, A P offers 60 standard single end configurations and 135 double end configurations. Additionally, A P can provide daisy chain assemblies tailored to customer requirements using any mix of end termination types. Standard ribbon cable for the line is 28 awg vinyl laminated cable which is electric pink in color. A red stripe on one edge provides a means of cable orientation. Rainbow cable with a teardown feature is optionally available on single-ended assemblies.

Even though all jumpers are built complete and tested at the factory, turn around time is targeted to be only two weeks. Additionally A P offers a special 3 day turn around service, at no extra charge, when requested.

For more information contact Robert J. Gabor, A P Products Incorporated, Box 110E, Painesville OH 44077. Phone: (216) 354-2101; TWX: 810-435-2250. Direct all inquiries to Rita Mercer.

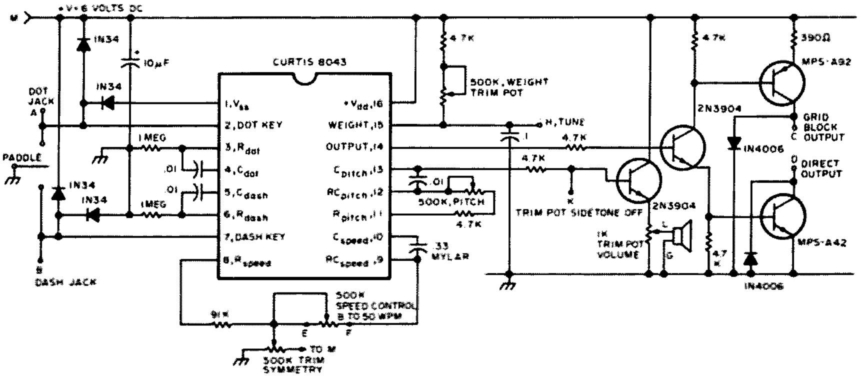

Fig. 1. Circuit diagram of MFJ CMOS-8043 electronic keyer. Jack connections: A – dot; B – dash; C – grid block output; D – direct output. Switch connections: K – sidetone off; H – tune; I – -Vcc; G – ground. Other connections: L – speaker; E, F – speed control; M – +Vcc.

squeeze-type keyer paddle is necessary. Also, operators who, like this writer, are real key thumpers, will probably prefer an external paddle with a weighted base to keep it in place during use.

Its small size, light weight and self-contained batteries should make the CMOS-8043 especially popular with campers, backpackers and DXpedition types who have learned to make every cubic inch of space and ounce of weight count. It also merits the attention of stay-at-home, fixed-station operators, whether their operating preference be traffic handling, DXing or just old-fashioned ragchewing. Priced at $39.95, the CMOS-8043 electronic keyer is available from dealers or direct from MFJ Enterprises, P.O. Box 494, Mississippi State MS 39762. ■

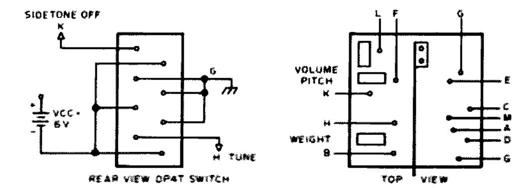

Fig. 2. (a) Rear view showing connections to DP4T function switch. (b) Top view showing position of paddle, adjustable trim pots and various circuit connections.

KENWOOD TS-700A 2 METER TRANSCEIVER

By Fred Goldstein WA1WDS

Two meters has come a long way since the days of Twoers and Gooney Boxes. While FM is the most popular mode of activity, there's plenty of SSB and even CW on the band nowadays, particularly in the OSCAR segments.

It takes a pretty good radio to get full enjoyment out of the band, and the Kenwood TS-700A is more than just a pretty good radio. Full band coverage is provided in four segments, with VFO or crystal control. You get FM, CW, upper and lower sideband, even AM. Power output is conservatively rated at ten Watts. The built-in power supplies are for both 117 V ac and 12 V dc.

The design is quite modern and innovative. On SSB, the unit is single conversion, with a crystal lattice filter at the 10.7 MHz i-f. The crystal bandswitched oscillator is premixed with the 8 MHz VFO and extensive bandpass filtering provides very low spurious response and emission. For FM, a second i-f at 455 kHz provides additional selectivity and improved audio recovery.

Kenwood didn't spare expense when it came to putting in the filters. There's a 20 kHz crystal filter coming out of the first mixer into the noise blanker. The blanker compares the noise across that bandpass with the noise within the SSB bandpass, and the blanking action is amazingly good. There's probably at least 30 dB of blanking available, if the noise gets bad enough. At my QTH, it never was strong enough to get through the blanker, and my other FM rig is driven batty by passing cars and trucks. When the SSB is less prone to noise than an FM receiver, that's a good blanker!

Coming out of the blanker, the SSB is cleanly tailored to its bandpass and sent to the i-f amplifiers and detector. For FM, the signal is converted down to 455 kHz, where two ceramic filters result in phenomenal selectivity. Splinter channels are no problem whatsoever with the TS-700A. I could listen to 146.625 and hear nothing but an occasional splattering voice peak even though the repeaters on .61 and .64 are very strong here. This is even better than the results I had with other expensive synthesized rigs. If everyone had a radio this sharp, the 2 meter band wouldn't seem half as crowded as it does now.

Not that the sensitivity isn't good. I was hearing signals on the TS-700A that most other radios couldn't tell were there. The VFO helps, too, since there are no "secret" frequencies with one. For repeater use, the transmitter is 600 kHz low in the 146 portion, 600 kHz high in the 147 portion. Putting the repeater switch on "reverse" inverts the operation, which is necessary for California plan inverted splits.

The VFO calibration is good within 1 kHz across the band, and the center

tuning position on the meter helps put you right on frequency. There's a 100 kHz crystal calibrator just in case you like to be exact. The unique "S-meter" circuit helps tuning on FM, too. The meter is left on the SSB i-f strip, so the repeater carrier has to be within the SSB bandpass to get a reading. The meter doesn't pin on strong signals like on most FM rigs, so you can accurately give a signal strength report or turn the beam using the meter as a guide.

If tuning a VFO while mobile seems a bit too difficult, there is room for eleven crystals. Since each crystal is at the VFO equivalent frequency, there's no need to use separate receive and transmit crystals. If your area has a repeater with 146.46 in and 147.06 out, a crystal for 1.006 MHz above the bottom of the 146 segment will put you there. Tuning in 147.06 would normally result in a 147.66 repeater input, so you need the crystal. If your area conforms to the usual American bandplan, you don't need any crystals.

There are other good features to the TS-700A. There are several varactor-tuned stages, including the front end, that optimize performance as you change band segments. The final has a tuning control, and there's even driver peaking, so you don't have to worry about losing sensitivity at one end of the band or the other. VOX is available as an accessory. If you really want some fun on two meters, the TS-700A will really deliver.

SOCIAL EVENTS

COLUMBUS GA
MAY 8-9

The Columbus Amateur Radio Club (Georgia) is holding its annual Hamfest on Saturday and Sunday, May 8 and 9th. The hamfest will be at the Fine Arts Building, Columbus Municipal Fairgrounds, Columbus, Georgia. For further information contact Dennis Hand, Jr. K4ICR, Route 1, Box 172A, Cataula GA 31804.

AMBOY IL
APRIL 25

The Rock River Hamfest will be held April 25, 1976, Amboy, Illinois Lee Co. 4-H Center Jct. 30 & 52. Same place as last year. $1 advance, gate $2, write Carl Karlson W9ECF, PO Box 99, Nachusa, Illinois 61057. Rain or shine – indoor or out, camping, large swap shop, food, and many prizes. Short trip west of Chicago. Talk-in 146.94.

SULLIVAN IL
APRIL 25

The Moultrie Amateur Radio Klub announces its 15th Annual Hamfest at the American Legion Pavilion in Wyman Park, Sullivan, Illinois on the 25th of April, 1976. Rain or shine, same place as always.

CADILLAC MI
MAY 1

The Wexaukee Amateur Radio Association announces their 16th Annual Swap-Shop and Eyeball that will be held May 1st in the National Guard Armory in Cadillac, Michigan, starting at 9 am. This Swap-Shop is open to all radio amateurs, citizens banders, and anyone interested in radio communications. Lunches will be available at noon and there is lots of free parking. Tickets available at the door.

MEADVILLE PA
MAY 1

The Northwestern Pennsylvania Swapfest will be held May 1, 1976 at the Crawford County Fairgrounds, Meadville PA. Free admission. $1 to display. Flea market begins at 10 am. Hourly door prizes and refreshments. Commercial displays welcome. Indoors if rain. Talk-in 146.04/64 and 146.52 MHz. Details: Crawford Amateur Radio Society, Box 653, Meadville PA 16335.

BIRMINGHAM AL
MAY 1-2

The Annual Birminghamfest Amateur Radio Convention will be held May 1 and 2 at the Alabama State Fairgrounds in Birmingham. Headquarters hotel: Sheraton downtown (on I-65). Features: giant two-day indoor/outdoor swap circle, manufacturers' exhibits, forums, displays, family activities, prizes galore, free Saturday night party, much more! Talk-in: 34/94 (WR4ADD), 3965 kHz. Information: B.A.R.C., PO Box 603, Birmingham, Alabama 35201. Sheraton reservations: 1-800-325-3535.

KANSAS CITY MO
MAY 2

The P.H.D. Amateur Radio Association, Inc. will sponsor the Seventh Annual Northwest Missouri Hamfest Sunday, May 2, 1976 at the Kansas City Trade Mark, Exhibit Hall 3 (Old Municipal Airport Terminal Building) starting at 9 am. Admission $1.50 in advance, $2 at door. Refreshments available; swap tables for a fee; forums, contests, prizes, commercial exhibits, women's and children's programs. Talk-in on 34/94 and 3925.

WESTMINSTER MD
MAY 2

The Potomac Area VHF Society will hold their annual hamfest on Sunday, May 2, 1976, at the Agricultural Center in Westminster, Mary-

briefs

The FCC continues on its course of deregulation as Docket 20686 (see page 148) proposes deletion of rules concerning portable and mobile operation. The proposal would permit amateurs to operate portable or mobile without advance notice to the Commission and without having to identify as such. FCC monitors in several states have been citing amateurs for such violations as signing "mobile" instead of "mobile eight"; Washington apparently feels enough is enough.

In other FCC news, it appears that **ASCII 8-level teletype** code will be permitted in the very near future. Results from the AMSAT Special Temporary Authorization for ASCII on the OSCAR satellites have been favorable, while computers are becoming more and more popular among hams. Also, the 220 MHz CB proposal is dead. While it is probable that CB will be granted new frequencies, they won't be taken from hams. 220 MHz repeater activity is growing rapidly in many areas and is almost on a par with 2 meters in some areas.

One very probable place for **CB expansion** is on eleven meters. While there has been a rulemaking under consideration for some years to provide additional channels for CB sideband operation, the number of scofflaws operating above 27.3 MHz has been increasing rapidly, using bogus call numbers in the "HF" series as well as making up others. The FCC has been unable to handle the problem; legalization of the so-called "HF" band may result.

Gus Browning W4BPD has departed on another DXpedition comparable to the one he took over ten years ago. He promises to visit as many countries as he can afford to; Bhutan will receive special attention as Gus will be helping the government of that remote Himalayan kingdom to modernize their communications facilities.

Repeater/police interface idea catching on; groups in various areas are contemplating following the lead of several Chicago area clubs whose systems have a direct touchtone-activated tie line to the 911 dispatcher. Hams are thus able to treat autopatches as a public service rather than simply a convenience; this should counter some of the criticism received due to questionable uses of autopatch. Hams and the FCC are both uncertain as to what is considered acceptable on an autopatch, with citations given out in some areas for practices considered acceptable in others.

Good publicity for amateur radio in various newspapers, as WA2CFA and others arrange for emergency shipment of medicine to Ecuador to help save the life of a 1½ year old girl. A *New York Times* story described the efforts of the various parties to rush the drug to South America, with ham radio getting the leading role. Hams' massive Guatemalan effort has also generated great PR.

Microprocessor technology is leaping ahead with National Semiconductor's announcement of their new SC/MP chip. While slower than some other microprocessors, the SC/MP (simple, cost-effective microprocessor) is designed to sell for under ten dollars and require a minimum of interfacing. The object is to have a microprocessor included as a component in devices that ordinarily wouldn't, such as cash registers and appliances. Most hobbyist applications don't require much speed anyway, so the day of the hundred dollar computer system can't be far off. Other microprocessor prices are falling; Texas Instruments has announced their TI8080 chip, equivalent to other 8080 chips, with a price of under $35 in single quantities.

A "Treasure Hunt" coordinated by the Keene (NH) Radio Amateur Society recovered two sacks of canceled checks stolen from an interstate bus while en route to the Cheshire National Bank in Keene. About fifty Boy Scouts, with ten ham mobiles using 146.52 for communications, helped find the checks which the thieves, who thought they were taking cash, had ditched in the woods in Winchester.

The FCC has acted on **Docket 20119**, shifting the hundred milliwatt "walkie talkies" that may be operated without a license from the 27 MHz Citizens Band to 49.82-49.90 MHz. Manufacture of the CB units may continue for a year; use will be permitted until 1983.

land, between the hours of 9 am and 5 pm. There will be a registration of $3. Talk-in on 146.94 and 52. For more information contact K3DUA or WA3NZL.

BROWNFIELD TX
MAY 2

The Brownfield 76 Centennial Swapfest will be held on May 2, 1976 in the National Guard Armory, Brownfield, Texas. Door prizes will include a 2 meter FM rig and a Johnson Messenger CB transceiver. Advanced registration $1.50 and $2.00 at the door. Social get-together the evening before in the Armory. Write Viola Simmonds W5FBM, 1603 E. Tate St., Brownfield TX 79316 for info and/or registration.

SEABROOK NH
MAY 8

The Hosstraders Third Annual Tail-gate Swapfest will be held Saturday, May 8, at 11 am at Addams' Campground, Route 286, Seabrook NH off Route 95 at the Mass-NH border. Admission 75¢, dealers included, no commissions or percentages. Excess revenues benefit March of Dimes birth defects campaign. FM clinic sponsored by Saddleback Repeater Association. Talk-in .52, .40-00, and/or 3940 kHz. If any questions, SASE to WA1IVB, Box 32, Cornish, Maine 04020.

FORT WALTON BEACH FL
MAY 9

The Playground Amateur Radio Club will hold its Sixth Annual Swapfest Sunday, May 9, 1976, from 8 am until 4 pm at the Fort Walton Beach Fairgrounds. Registration $1.50 advance — $2 at door. Free swap tables. For hotel and other information write: Swapfest Committee, PO Box 873, Fort Walton Beach FL 32548.

JAFFREY NH
MAY 15

The 1st Annual Fly In and Flea Market will be held Saturday, May 15, 1976 at the Jaffrey Municipal Airport (Silver Ranch) in Jaffrey, New Hampshire. *73 Magazine* will host the event. Picnic facilities, food stand, great ice cream, horseback riding available at Silver Ranch stables across the road from the airport (200 yds). Plenty of hangar space for exhibitors, etc. Come one — come all — if you can't fly — drive — but get here. Jaffrey is 6 miles south of Peterborough on U.S. Rte. 202.

WEST LIBERTY OH
MAY 16

The Champaign Logan Amateur Radio Club is holding its 6th Annual Flea Market and Auction on May 16, 1976 starting at 12 pm at the West Liberty Lions Park at West Liberty, Ohio. Free admission, trunk sales and tables $1.00, door prizes. Talk-in on 146.52 and 146.13/73.

LAKE DELTON WI
MAY 22

The Yellow Thunder Amateur Radio Club will sponsor their 6th annual hamfest on Saturday, May 22, 1976 at the Dell View Hotel in Lake Delton, Wisconsin, starting at 10 am. Meetings and events include: swap shop, DX, VHF, RTTY, MARS, ARPSC, hidden transmitter hunt, ladies activities, liars contest and an evening banquet with entertainment including something new: "The Kitchen Maids." Grand prize: Regency HR2-B. Admission $7 in advance or $7.50 at the door. ($1.50 or $2.00 without the banquet.) For further information contact Kenneth A. Ebneter K9GSC, 822 Wauona Trail, Portage WI 53901.

SANDUSKY OH
MAY 23

The Vacationland Hamfest will be held on Sunday, May 23, 1976 at the Erie County Fairgrounds from day-break till 3 pm. Featuring — free camping Saturday night, free transportation to Cedar Point ferry boat dock. Bring the family and let them visit the greatest amusement park in the U.S.A. Plenty of flea market tables, dealers welcome, 8 acres for trunk sales. 1st grand prize: 1200 Watt ac gasoline generator. Tickets are $1.50 in

advance — $2 at gate. Flea market vehicles $1 each. For further information or reservations write: E.A.R.S., PO Box 2037, Sandusky, Ohio 44870. Call in on 52-52.

WABASH IN
MAY 23

The Wabash County Amateur Radio Club will hold their 8th Annual Hamfest Sunday, May 23, 1976 at the 4-H Fairgrounds in Wabash, Indiana. The hamfest will be held rain or shine. There will be a large flea market (no table or set-up charge), technical forums, bingo for the XYLs, free overnight camping with ac hookup, and plenty of parking. Lots of good food at reasonable prices. Admission is $1.50 for advance tickets, $2 at gate. For more information or advanced tickets write to Bob Mitting, 663 North Spring Street, Wabash, Indiana 46992.

POTTSTOWN PA
MAY 23

The Pottstown Area Repeater Team Hamfest and Flea Market will be held on Sunday, May 23 at 9 am to 4 pm at Rt. 422, Hiway Drive-in 8 miles east of Pottstown. There will be prizes, auction, contests, and refreshments. Talk-in 52/52, 81/21, 66/06. Registration $2 — tailgate $1. For more information contact A. Jefferson WA3VYS, 444 Roland Avenue, Pottstown PA 19464.

KNOXVILLE TN
MAY 29-30

The Radio Amateur Club of Knoxville will hold its annual Greater Knoxville Hamfest on May 29 and 30th at the National Guard Armory, 3330 Sutherland Ave., N.W. Activities will include an indoor and outdoor flea market. Door admission $1 and a chance for a door prize. Tables and space rental for indoor flea market will be $2.50 per table. There will be a banquet on the 29th at 8 pm at Howard Johnson's, West Town at $6 per person. Talk-in on 16/76 — 34/94 and 3980. More information by SASE from Edward L. Melton WB4JGF, 749 Elkmont Rd., Concord TN 37922.

BURLINGTON KY
MAY 30

The Kentucky Ham-O-Rama will be held Sunday, May 30, 1976 (Memorial Day weekend) at Boone County Fairgrounds, Burlington, Kentucky. Ten minutes south of Cincinnati, Ohio near I-75. Prizes, forums, XYL program, exhibits and flea market. Tickets $1.50 advance. For more information contact: NKARC, PO Box 31, Fort Mitchell, Kentucky 41017.

It Happened to Me...

Charlene Knadle WB2HJD
316 Vanderbilt Parkway
Dix Hills NY 11746

I decided to improve the hamshack. The O.M. was out and there couldn't be a more perfect time. The Fibber-McGee hamroom closet was sixty percent empty. O.M. and friends were on a mountain-topping expedition, and they'd packed like it was for forever. I had time. They would be gone the entire weekend.

Lug the rest of the heavy stuff out of the closet. Clean the floor — hadn't been vacuumed since we moved in (too equipment-covered).

Bring up a steel-shelf unit from the basement. Wouldn't miss one there. Put it in hamroom closet. Fits fine. Lug the heavy stuff back into closet — this time onto lowest shelf.

Add another bookcase — this one wood-grained and handsome. Fill it with *QST*'s, *73*'s, *Ham Radio*'s and *CQ*'s (O.M. needs them for quick reference while on the air) so there won't be space left for voltmeters, power supplies, and supply supplies.

Dust and wax desk and two tables. Clean floor. Stand back and admire. What could be better than this? Something could. There could be an acoustical ceiling.

Too bad I thought of it.

OM returns aghast and delighted. Adds pegboard back to closet. Puts things on shelves *neatly*. Devises wire-hanger for side wall. Progress!

Pass the word I want egg boxes to use as acoustical tiles. NASTAR office says they seem to work (NASTAR, we remember you), though they never measured to be sure. Friends and relatives give egg boxes. Especially Grandmother, whose friends run a delicatessen. Can't just tack them up. Got to paint. (Worst mistake).

Line basement floor with newspapers; spread the cartons. Dab the paint, twist; dip, dab, twist. Slow going. Must be a better way. An idea lights. Use an insect sprayer. Got one for $2.39.

"Why don't you just buy ceiling tiles? The suspended ones are great."

"The idea is to do this *cheaply*."

"Have you considered your labor?"

"I want to do something *different*. Be *creative*."

"You don't even know if it'll work."

"We'll measure it."

"Why paint first?"

"I've already started. Leave me alone."

Remove insect-sprayer cap. Hole small. Sacrifice soup ladle and kitchen funnel. Fill it. Push! Hard going. Clogs. Paint too thick; hole too small. Scratch $2.39 plus ladle and funnel. Back to the brush. Dip, dab, twist; dip, dab, twist. This is going to take forever.

Six painting sessions later, enough done to cover one fourth of hamshack ceiling. Tall stack unpainted; short stack painted, wet ones on floor.

Enthusiasm not lost, just new projects gained. Let it ride. Months later: "I'm not so sure I like the idea. Why don't you drop it."

"Never. After all those people contributed cartons? After all my work?"

"Think of what there is yet to do."

I did. And I didn't do. Too many other things. (Sew, study, have another baby.)

Rain seeps into basement. Dries. Seeps again. Dries. O.M. disgusted with clutter *there* (of all places). Goes on binge. Cleans unmercifully. Fills garbage cans. Sells valuable gear. I'm busy upstairs.

"By the way," (weeks later) "I threw away those old egg cartons. It would never have worked. And you weren't going to finish them anyway."

Could he be wrong? (Might it work?) Anyone want to find out? ■

Robert L. Anderson W8KZM
391 Pleasant Ridge Ct.
Saline MI 48176

555 Timer Sweep Circuit for SSTV

The circuit described in this article uses a 555 timer IC chip as both the oscillator and linear sawtooth generator circuit for an SSTV monitor. Most SSTV monitor sweep circuits that have been published use a transistor-discharged capacitor sweep circuit to produce the 15 Hz and 1/8 Hz sawtooth waveforms required for horizontal and vertical deflection. Separate oscillator circuits are required to drive the discharge transistors to produce a raster in the absence of sync pulses, or else the beam will stay at maximum deflection until sync pulses return.

I have been intrigued for some time with the 555 and its versatility in many applications. So, when I was building my SSTV monitor, I decided to experiment to see if the 555 could be successfully used as both the linear ramp generator and oscillator.

The entire sweep oscillator circuit described uses a pair of 555s, one for the horizontal sweep, and the other for the vertical. A single 556 chip, which is merely two 555s in a single 14 pin DIP package, could also be used.

The 555 Timer

For those not familiar with the 555, let me first describe its basic design and use as a simple oscillator. Such information is basic to the understanding of the SSTV sweep circuit.

A block diagram of the 555 is shown in Fig. 1. It contains a precision voltage divider string consisting of three equal resistors, two comparators, and a control flip flop. Also included are an inverting buffer amplifier capable of sourcing or sinking 200 mA and a discharge transistor whose collector is available at pin 7. The comparators set or reset the control flip flop when their inputs are equal to 2/3 or 1/3 of the supply voltage, respectively. When the flip flop is in the "set" condition, the output on pin 3 is at ground and the discharge transistor is "on" in the saturated condition. The 555 is available in an eight pin "Mini-DIP" package or in an eight lead TO-5 can.

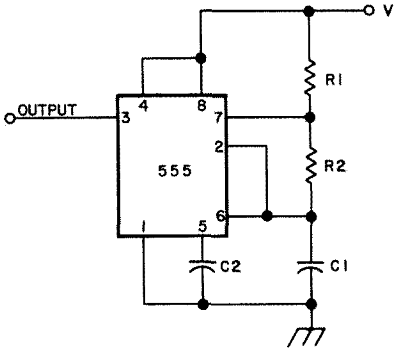

Fig. 2. Basic oscillator.

Basic 555 Oscillator

The use of the 555 as an astable oscillator is shown in Fig. 2. Circuit operation is as follows: Upon application of the supply voltage, which can be between 5 and 15 volts, capacitor C_1 will start to charge through R_1 and R_2. When the capacitor voltage becomes equal to 2/3 of the supply voltage, the threshold comparator sets the control flip flop, turning on the discharge transistor. The capacitor then discharges through R_2, until its voltage is equal to 1/3 of the supply voltage. The trigger comparator then resets the flip flop, turning off the discharge transistor, allowing the cycle to repeat. The waveforms produced are shown in Fig. 3. Since the comparator switching points are directly determined by the supply voltage, which also determines the charging rate of the capacitor, the oscillator frequency is insensitive to changes in the supply voltage. The oscillator frequency can be calculated by:

$$f = \frac{1.44}{(R_1 + 2R_2)\ C_1}$$

Capacitor C_2 is merely a by-pass to keep noise out of the reference voltages.

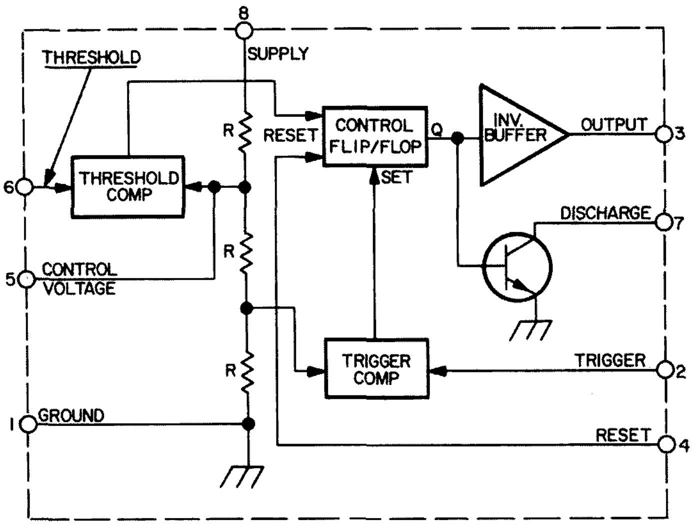

Fig. 1. Block diagram of 555 Timer Chip.

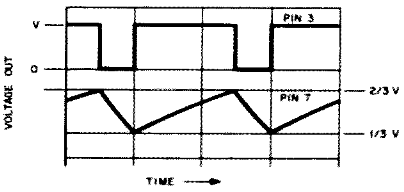

Fig. 3. Oscillator waveforms.

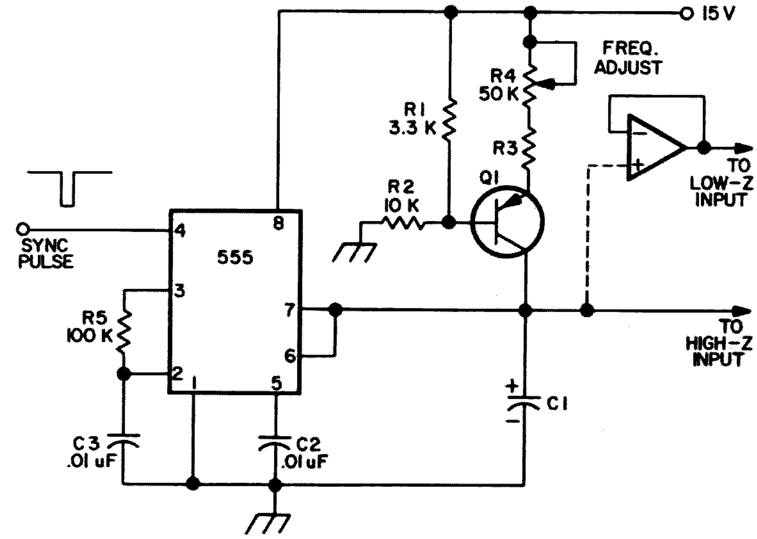

Fig. 4. Basic 555 sweep circuit. Q1 — 2N2907 or equiv.; C1 — 1 uF horiz., 10 uF vert.; R3 — 10k horiz., 250k vert.

Linear Sweep Oscillator

This basic circuit had some basic deficiencies which made it initially unsuitable for SSTV sweep application. The main objection was that its output waveform was exponential rather than linear. The other objection, rather minor, was that it did not return to zero but began recharging at 1/3 supply voltage. Both these problems were overcome with the circuit shown in Fig. 4.

Linear charging of the capacitor was achieved by using a transistor constant current source in place of R_1 and R_2. The collector current of the PNP transistor is constant as long as the capacitor voltage is not equal or greater than the base voltage, allowing the transistor to conduct normally. The transistor operates to maintain the same voltage drop across the emitter resistors R_3 and R_4. The collector current for a high gain transistor ($\beta > 300$) is for all practical purposes the same as the emitter current:

$$\frac{I_c}{I_e} = \frac{\beta}{\beta + 1} = \frac{300}{301} \approx 1$$

The result is a constant current that can be varied by changing R_4. The amount of current will determine the charging rate of the capacitor, and hence establish the oscillator frequency.

To allow the waveform to return to zero volts before restarting the sweep, the trigger

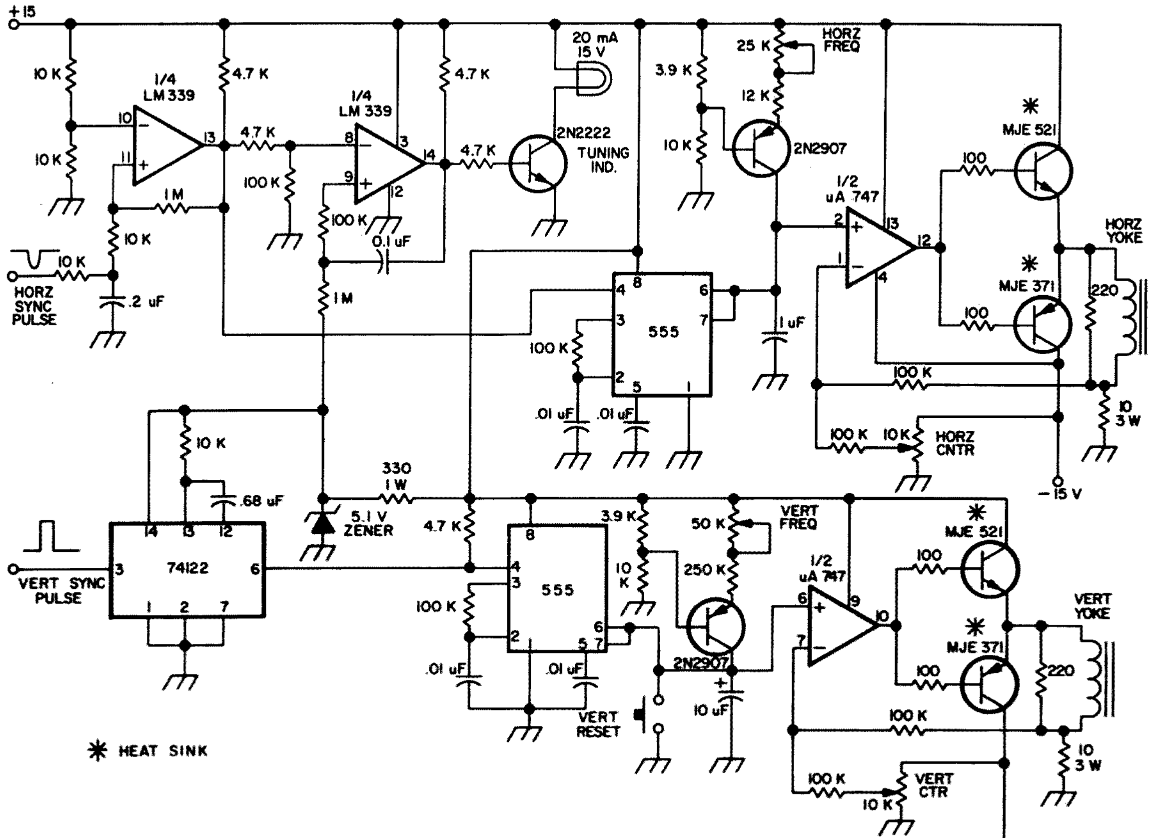

Fig. 5. Complete 555 SSTV sweep circuit.

input was connected instead to the output, pin 3, through a delay network R_5 and C_3. Approximately 1 millisecond after C_1 is discharged and the output voltage goes low, the trigger voltage falls below 1/3 the supply voltage and a new sweep is started. The discharge of C_1 is quite rapid, allowing for rapid retrace. The 1 millisecond delay, however, insures that the capacitor does discharge completely before starting a new sweep.

In operation, the frequency of the oscillator is set by adjusting R_4 so that the period of oscillation is just slightly longer than the time between sync pulses. The presence of a negative-going sync pulse on the "reset" input (pin 4) will discharge the capacitor for retrace at the proper time and initiate a new sweep.

The sawtooth sweep is taken from pin 7. This is a high impedance point, and needs to be buffered with a voltage follower operational amplifier circuit if it must drive a low impedance input circuit. In this application, however, I was able to drive the positive input of the operational amplifier in the sweep driver stage without loading problems on C_1 or the current source.

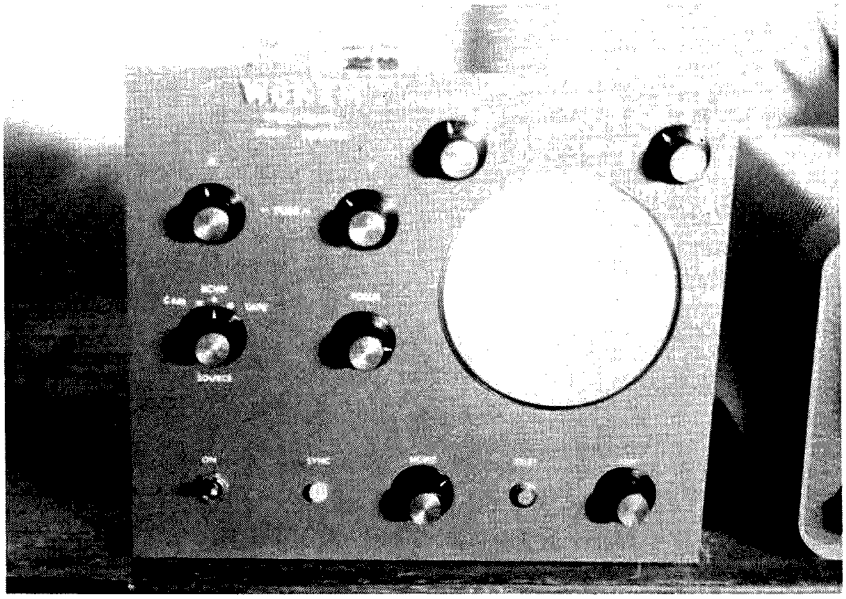

Home brew SSTV monitor using the 555 sweep circuit.

Summary

The oscillator circuit is very stable, and will run very close to the correct frequency if sync pulses are QRM'd or otherwise lost. The "retriggering" aspect of its design makes it possible for the sweep to lock in again instantly on the first new pulse after previous pulses were lost.

Fig. 5 is a complete schematic of the sweep circuit used in my SSTV monitor. Included also in this circuit is a pulse "stretcher" and lamp driver that operates from the horizontal sync pulses and is used as a tuning indicator. The circuit has been in use in my home brew SSTV monitor since November 74. The rest of the monitor is basically the W9LUO[1] design. The operation of the 555 oscillator/ramp generator has produced good results and stable pictures under many adverse conditions. ■

[1] "A Solid State SSTV Monitor-Mark II," Robert Tschannen W9LUO, *QST*, March, 1973, p. 27.

from page 12

Ramada Inn in Culver City was contacted and they provided a room and telephone facilities. A portable two meter station, operating under the club's W6GAA callsign, was activated from that location on the club's WR6ABB repeater and all normal repeater activity other than that of an emergency nature was suspended. In place of the normal 'ABB activity, a PARC sponsored "Guatemalan Disaster Relief Net" was called. The purpose of this net was to take traffic input from all over the LA area, collate this traffic as to type (i.e., priority, emergency, health and welfare, etc.) and then disseminate same to the proper channels for delivery. Shelly WB6KED, who had already been working with the consulate, was dispatched on a rather permanent basis to set up a portable two meter station at their location. With the generous cooperation of Mr. John Smith, Supervisor of Airport Operations at Los Angeles International Airport, space and power was made available for a portable station to be set up at the Pan American Airlines terminal. This station was initiated and manned by a non-PARC member who volunteered both his equipment and time to get things started: Mr. Bill Orenstein KH6IAF/6, mentioned earlier in this column, along with the assistance of his "date" for the evening, Miss Karyn Ericksen. Bill and Karyn began the airport operation around 6 pm Saturday afternoon and continued on to about 5:30 am Sunday morning when relief operators finally arrived. The Pan Am terminal was chosen since they are the only carrier from this area with regularly scheduled flights to Guatemala City and were therefore bearing the brunt of the transport job of both people and supplies. Many people with relatives were going to that terminal in hopes of finding a way to send a message "back home," and it was thought that a station set up for easy public access would be ideal at that location. It was.

As soon as everything was ready to go, Lenore Jensen W6NAZ, Chairman of the Southern California Amateur Radio Public Relations Committee, was asked to contact the news media and pass along the location of the airport station and the "Command Center" telephone number. In short order, the majority of Los Angeles broadcast media outlets were carrying the necessary information to the public and things began to get busy. While no exact figures are yet at hand, in the two days that this phase of the operation took, approximately 2,000 messages were collected and placed en route to Guatemala in two ways. Emergency and priority traffic was immediately handed off to stations in direct HF contact with Guatemala through a number of HF Disaster Relief Nets operating 20 meters during the day, and 40 or 80 in the evening. Through the efforts of WB6VDE, WA6IFU and WA6CPS, a portable 80 meter station was set up in the Ramada Inn parking lot housed in Roy WA6CPS's van; however, most of the aforementioned high priority was handled by other volunteer stations, many non-PARC members. Word had spread quickly as to what PARC was doing and the necessary HF stations soon made their presence and willingness to help known.

Health and welfare of a non-priority nature was handled in another way. The majority of it was placed in the hands of the crew of an airliner en route to Guatemala City with instructions that it be delivered to the proper authorities down there. This was done to alleviate the strain on the HF nets so that they could handle traffic on the aforementioned priority level. Two such packets went out on Sunday the 8th – one at about 9:45 am and another about 9 pm with the final batch to follow this coming am. At around midnight Sunday, this phase of the operation was terminated. I say this phase, since there will be more to come in the days and weeks ahead. We will continue to run communication liaison for the Consul General, accept and disseminate return communication, keep information on what is transpiring headed to the media, and anything else we are called upon to do. In fact, earlier this evening Dan and I found ourselves working hand in hand with both the Guatemalan and Panamanian Consul Generals weighing relief supplies in the Pan Am air freight building prior to shipment. Earlier, I had found myself directing people who spoke little or no English to John WA6HQL, another non-PARC member who had been quick to offer his services when someone who was bilingual in Spanish and English was found a necessity at the airport operation. John spent about 10 hours cramped behind a desk writing messages in English that were being dictated to him in Spanish.

Recording it all at SAROC is the author, as captured in this photo by Mrs. ITF.

Then there was Bobby WA6ORR, who made sure that all operations had the necessary food to survive on. She ran around in the rain gathering donated food from McDonald's Hamburgers and Shakey's Pizza so that everyone would have lunch and dinner. As if that were not enough, she also spent about five hours manning a message-gathering position at the airport facility; the limited amount of Spanish that she knows was sure handy. The list of volunteers for this operation goes on and on and I could fill an entire column with just names. What's really important, though, is that when people in another part of the world were in need of help, people here, amateurs such as you, were able and willing to provide that help. Not only am I proud that PARC took on this humanitarian project, but I'm proud of every amateur and non-amateur alike that volunteered his or her time to make its success unquestionable.

I think that Karyn Ericksen may have summed it up best last evening when I spoke with her and Bill at the airport. To paraphase what she said: When things such as a disaster like this take place, one's instinct is to try and find some way to help. What these ham operators are doing is one of the finest and most sincere efforts she had ever seen and she was thrilled to be a part of it. There was no doubt in my mind that she really was impressed; the excitement in her voice was a give-away that she was witness to something beautiful.

Next month: A bunch of wrap-ups along with a meeting, so get ready for another long one. More on autopatches, the windup on WR6AJP, the windup on SAROC and what that beautiful guy Johnny Johnston K3BNS told us about future FCC plans, and the windup on this story along with coverage of the February 22 SCRA meeting in San Diego. Just may be some big surprises from that one. ■

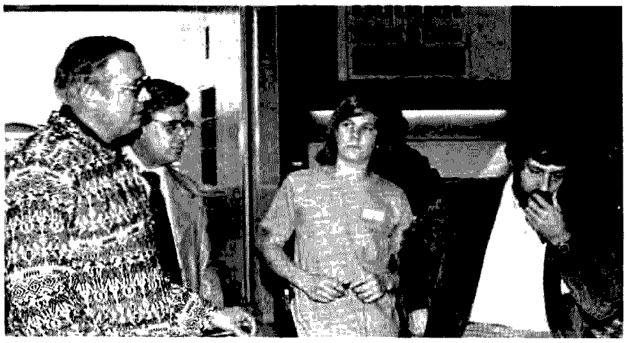

Bill Orenstein KH6IAF/6 relays earthquake information from Dr. Stark of "Food for the Hungry" (one of the first returnees) to the Los Angeles Guatemalan Consulate.

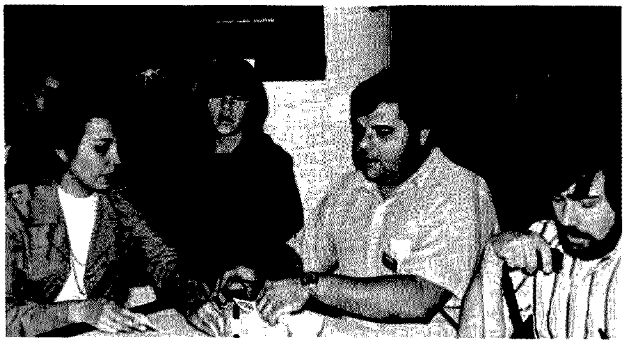

"Operation Save-a-Nation": PARC's portable station at L. A. International. Here, John Barreiro WA6HQL translates a health and welfare message into English. More than 3000 messages were handled.

Photo processing courtesy of NBC Network Press, West Coast Division.

W. Edwin Cain K4ORT
Rt. #1, Farm Estates
Perry GA 31069

Tech Manuals

So! Now you're having second thoughts about that beautiful piece of electronic gear you bought at the surplus sale. It's beginning to look more like a boat anchor all the time. But, you say to yourself, if I only had a technical manual for it, I might be able to do something besides cannibalize it. Well, my friend, take heart. It is possible that you can get a manual for it. Public Law 90-23 allows the sale of unclassified technical manuals directly to the public. This article will tell you how to go about ordering a manual and approximately how much it will cost.

Each agency, i.e., Army, Navy and Air Force, is responsible for determining the releasability and cost of the manuals under its jurisdiction. In the case of the Army and Navy, each has a single office where you can send your request, but within the Air Force there are five different activities depending on the type of equipment involved.

Determining which of the first categories your goodie fits in will probably be obvious by the type sale where you purchased the item (Army, Navy, AF). If it is an Air Force item, you must further determine which activity in the Air Force can satisfy your request. But even if you goof and mail your request to the wrong place, no harm will be done, except maybe some delay in getting the information you want. Each service has a similar way of identifying its manuals: the Army precedes a number or group of numbers usually with TM; the Navy with NAVSHIPS; and the Air Force with T.O. If there is any reference to this type number associated with the equipment when you get it, by all means

mention this in your request. It may save you both time and loot, because if an agency has to perform research in excess of an hour or so to locate the number, you may have to pay for this research. However, most research requires much less time than this, so you don't have to worry about it.

The manufacturer installs a nameplate on each item of equipment before it is delivered. The nameplate contains, among other things, the Joint Electronics Type Designation Number or AN number as it is often referred to. This number tells you what the item is and, in the case of the Air Force, gives you a clue as to what activity is responsible for the technical manual.

As was stated earlier, if it is Army or Navy equipment, you need only mail your request to the appropriate address which is also listed at the end of the article. If it is Air Force equipment, mail your request to one of the five Air Force bases listed, after determining the appropriate one by reviewing the type equipment managed by each one.

Now for the cost. It is nominal as the government barely recovers printing costs. There is a minimum charge of $2.00 for manuals up to six pages and an additional one-cent-per-page charge for all pages in excess of six. For example, a manual with 100 pages would cost about $3.00. Be sure to specify what type manual you want, i.e., maintenance, operation, or parts list. Do not send any money with your original inquiry. As soon as the agency receives your request they will determine if a manual is available. If it is, they will notify you what the cost is, how to make out your check or money order and tell you where to mail it.

That's all there is to it, so don't let that goodie gather dust on the shelf. Get yourself a technical manual and put it to work.

ADDRESSES

Navy

Director, Navy Pubs.,
Hand Printing Service
Naval District Washington
Washington Navy Shipyard
Washington DC 20390

Army

Hq, DAAG-PAS
Forrestal Bldg
Washington DC 20314

Air Force

Oklahoma City
ALC/MMST
Tinker AFB OK 73145
Navigation Instruments, Flight Instruments, Autopilots and Airborne Gyro components.

Ogden ALC/MMST
Hill AFB UT 84406

Cameras, motion and still picture [all photo equipment]

San Antonio ALC/MMST
Kelley AFB TX 78241
Most all general purpose test equipment [i.e., 'scopes, VTVM's Tube testers, etc]

Sacramento ALC/MMST
McClellan AFB CA 95652
Ground communications equipment [Navigation, Radar, communications] motor generator sets, teletype and facsimile equipment

Warner Robins
ALC/MMST
Robins AFB GA 31098
Airborne Communications equipment [Navigation, radar, communication, interphone] night vision equipment and miscellaneous communication equipment

NOTE
It is not possible to list all categories. Those listed are general and the ones in which Hams would be most interested. ■

Si Dunn K5JRN
3607 Binkley
Dallas TX 75205

RF and Mod Monitor

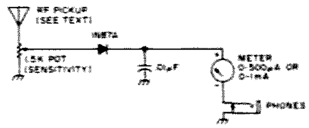

Around most ham shacks, several uses can be found for a simple rf and modulation monitor. This one is little more than a glorified crystal detector, but it monitors outgoing rf, aids in the tuneup of transmitters and antennas and lets you hear how your transmitted signal sounds.

Of course, single sideband — if the carrier is properly suppressed — will sound through this monitor like you're talking with a mouthful of wet cement. Amplitude modulated signals should sound clean and natural.

I built this circuit in a small phenolic box measuring 3-3/4 x 2-5/8 x 1-3/8 inches. A metal minibox also can be used. The rf probe is 5 feet or so of #22 enameled copper wire folded and taped into a "whip" about a foot long and soldered to a phono plug. At low frequencies and low power levels, a longer piece of wire may be necessary for sufficient rf pickup. Most any germanium diode should work, but a 1N87 gave higher output than a couple of other general purpose diodes. ●

Michael Wheeler WB4YDX
3259 Roxbury Drive
Lexington KY 40503

A Failure to Communicate

I may give up ham radio. Band conditions have been getting progressively worse and recently it's been so bad, I haven't even been able to get through a complete QSO.

Last week was particularly frustrating; for example, on Sunday I was talking to a TV weatherman out in six-land and he told me about a wealthy friend of his who'd spent a bundle on a fancy antenna farm. It had separate towers with monoband beams for each band and the rotors were powered by specially designed batteries. They required a critical amount of internal pressure which was provided by an external compressor unit.

It seems that during the recent DX contest this fellow left the compressor on and the batteries built up so much pressure that they exploded, sending all kinds of debris into the air.

Naturally, when I heard about that, I commented that the skies must have been partly crowded with shattered towers, due to a high pressure cell. I figure the band must have fallen out about then 'cause he didn't come back after that.

Then on Wednesday, I was up on Twenty, talking to a foreign sounding guy who kept referring to his transmitter as his E-mitter. He probably called it that because of its A-1 emissions (they sounded pretty good to me anyway). He told me about a run-in he'd had with the local tax collector who'd tried to impound his radio equipment. When they went to court over it, the judge, who turned out to be the tax collector's brother-in-law, told the ham to hand over his gear.

I asked him if the judge had a deep voice, and when I found out that he did, I said, "It's obviously another case of a short circuit from E-mitter to collector due to an improperly biased bass."

The band dropped out on us. ■

Docket 20686

Before the
Federal Communications Commission
Washington, D.C. 20554

In the Matter of

Deregulation of Part 97 of the Commission's Rules concerning portable and mobile operation of stations licensed in the Amateur Radio Service

DOCKET NO. 20686

NOTICE OF PROPOSED
RULEMAKING

Adopted: January 14, 1976;
Released: January 27, 1976

By the Commission:
Commissioner Lee absent.

1. In this Notice of Proposed Rulemaking the Commission proposes to simplify greatly the procedures involved in operating a station licensed in the Amateur Radio Service at a portable or mobile location. We propose to delete those sections of Part 97 of the Commission's Rules requiring that licensees operating their stations portable or mobile identify their transmissions as originating from a portable or mobile location. Section 97.313, concerning the station identification required of stations operated in the United States by aliens pursuant to international reciprocal agreements, would not be affected by the amendments proposed herein.

2. By way of background, an amateur licensee is presently permitted by Section 97.95(a) of the Rules to operate his station away from the permanent station location anywhere in the United States, its territories, or possessions as a portable or mobile station. Under Section 97.95(b) a licensee may, with certain restrictions, operate his station as a portable or mobile station outside the limits of the United States, its territories, and possessions. Sections 97.95(a)(3) and 97.95(b)(3) require that advance notice of such portable or mobile operation be given the Commission, pursuant to the provisions of Section 97.97, which specifies the content of the required notice, and states, further, that such notice need be furnished only if the contemplated portable or mobile operation is or is likely to exceed 15 days. Finally, Sections 97.87 (b) and (c) provide that the transmissions of stations being operated at portable or mobile locations be identified as such.

3. We believe those sections of the Rules cited in the preceding paragraph to be superfluous. Such requirements have never been shown to be of use to the Commission in its regulatory program, and while amateur licensees would in the future, as now, be afforded the option of operating their stations at portable and mobile locations, we perceive no purpose to be served in requiring advance notice to be given the Commission or in requiring that transmissions of stations being operated at portable or mobile locations be identified as such. We would stress, however, that in eliminating these requirements we would not be prohibiting those licensees wishing to do so from continuing to identify their portable and mobile transmissions in the traditional manner. We would simply no longer require it.

4. In proposing that the portable operation station identification become optional, we recognize the probable impact on certain amateur operating practices and operating award programs neither regulated nor sponsored by the Commission. For instance, under the proposed rules, the control operator of a station in portable operation at a location outside its fixed operation call sign area [§97.51(b)] would no longer be in violation of the Commission's Rules should he choose not to include the portable designator when identifying the station. In these instances, listeners would not be able to determine from the identification that the station was located outside the fixed operation call area. Call areas would, in a de facto sense, be partially eliminated. For this reason, we particularly wish to receive comments on the issue of whether those amateur operators who would otherwise not elect to identify their stations as being in portable operation should be inconvenienced in order to eliminate any impact upon ongoing amateur practices and programs. While adoption of this proposal might ultimately cause a substantial dilution of the significance of amateur call sign areas, it would provide the Commission with important indicia of the extent to which the Service is capable of self-regulation and the extent to which our deregulatory program is likely to be successful.

5. For the reasons cited heretofore we therefore propose to delete in their entirety Sections 97.87 (b) and (c), 97.95 (a)(3) and (b)(3), and 97.97 of the Commission's Rules. The remaining sections of Section 97.87 would be redesignated to reflect the deletions.

6. The proposed amendments to the Rules, as set forth in the Appendix, are issued pursuant to the authority contained in Sections 4(i) and 303 of the Communications Act of 1934, as amended.

7. Pursuant to applicable procedures set forth in Section 1.415 of the Commission's Rules, interested persons are invited to file comments on or before February 27, 1976*, and reply comments on or before March 8, 1976. All relevant and timely comments and reply comments will be considered by the Commission before final action is taken in this proceeding. In reaching its decision in this proceeding the Commission may also take into account other relevant information before it, in addition to the specific comments invited by this Notice.

8. In accordance with the provisions of Section 1.419 of the Commision's Rules, an original and eleven copies of all statements, briefs, or comments shall be furnished to the Commission. Responses will be available for public inspection during regular business hours in the Commission's Public Reference Room at its headquarters, 1919 "M" Street, N.W., Washington, D.C. 20554.

FEDERAL COMMUNICATIONS COMMISSION

Vincent J. Mullins
Secretary

**This Notice was received too late for inclusion in the February, March and April issues.*

Please be advised that we have the unique situation of having recovered a Unimetrics Ultracom 25 with no obvious ID or serial no.

Would you please change your lost column in *73* to include "found"? Request that interested people contact David M. Stoner K8LMB, 619 Doepke Lane, Cincinnati OH 45231.

Keep up the good work with *73* – I love it.

David M. Stoner
Cincinnati OH

Tracking the HAMBURGLAR

HIJACKED: RF Comm. Inc. RF-403 two meter transceiver, s/n unknown. 4 Chan. 80 Watts approx 4"h x 12"w x 12"d. Set up for MARS frequencies, 34-94 and possibly other amateur frequencies. Color is black. Please notify FBI or Wallace Moore WBØAWH, 12053 W. Virginia Ave., Lakewood CO 80223, phone: (303) 986-3909.

KIDNAPPED: ICOM IC230 two meter transceiver, s/n 2403009. Rig was taken without the mike on December 9, 1975 in Cleveland, Ohio. Contact Ferd H. Nye, Jr. WA8NXT, 31497 Hilliard Blvd., Westlake OH 44145.

ROBBED: SB-144 two meter transceiver, s/n 620962 with "W5PJ" stenciled on the set. The wires were cut and the set with microphone was removed. It was equipped with 34-94; 94-94; 16-76; 22-82; and 52-52. It also had county and one city receiving police frequency. Taken on January 17, 1976. Please contact Dr. Shailer Peterson W5PJ/K4HL, 5511 Keystone Drive, San Antonio TX 78229, phone: (512) 684-0449.

ABDUCTED: Heathkit HW 202 two meter transceiver, s/n 07429. Taken from auto of Dick Cullen WBØAGT. Mike has broken switch bar. "Stolen from WBØAGT SSN 410-66-8452" engraved on back. Has home brew synthesizer installed on top of set in mini box approx. same size as HW202 and is painted black. Has 2 RG-174 interconnect cables. Xtals installed: 37-97, 34-94, 28-88, 07-67 and 52-52. Please notify Dick Cullen WBØAGT, 1515 Newcastle St., Colorado Springs CO 80907, phone: (303) 598-1849.

LIFTED: HR-2 Regency two meter transceiver, s/n 04-02689. Xtals installed: 34-94, 94-94, 16-76. Please notify Dick Sucher WAØZLY, 3410 N. Prospect St., Colorado Springs CO 80907, phone: (303) 473-4186.

LOOTED: Unimetric Co., Ultra Com 25 – 12 chan. two meter FM transceiver, s/n 080-114. Taken from car in Akron, Ohio on September 12, 1975. Contact Herman Freeder W8VQI, 944 Jason Avenue, Akron OH 44314.

RUSTLED: Heath HW-202 two meter transceiver. Crystals installed: 34/94, 94/94, 07/67, 16/76, 88/88. Can be identified by wrong size wire on PC board, modulation is set HOT, so normal use will clip out on repeaters. Please do not discuss this incident on any of the above frequencies. Stolen from Doc. A. L. Stigers, Golden CO 80401, phone: (303) 237-3296.

LETTERS

from page 100

couldn't turn that down. I feel that my experience in coming to see how radio has enriched my life, not just my husband's, might have some effect on other XYLs. It seems to me that you fellows are missing the boat in not bringing in the nearest and dearest to swell the ranks. Our instructor has his wife helping him in class as well as his two sons, all of whom have their own licenses. They made it a *family* hobby! With all the talk about bringing in more people, why not begin at home? You may counter by telling me that wives don't feel they can hack it (I know); that they are really not at all technically inclined (I know); that they don't have all that time to yak (me, too), etc. Would you be interested in an article of two from me? My first title could be "Confessions of a Formerly Ambivalent XYL," followed by "Confessions of a Formerly Ambivalent Novice," or something like that.

I am as surprised as you may be to see this offer — I really don't need anything more to keep me busy, but I do feel I have something to say to hams and their families. Another point I want to make is the fact that radio should be a very appealing hobby to lonely people. Here in California there are so many singles and families who have little community involvement due to being transplanted or to shyness or what have you. They would constitute a tremendous number of people who could be brought into the radio family and it would enrich their lives a great deal. I see these people in my piano classes at night school and my women's chorus sings at hospitals, churches and clubs, where the same observation goes in spades. I could wish that the code were not so absolutely necessary and that the exams were not so difficult (you get the idea sometimes that the FCC is deliberately trying to trick you on the answers). However, I can also understand the pride hams have in having mastered their skills themselves and their consequent unwillingness to bring in others with less skill. Sometimes, people have to compromise with reality, though, if they really want more members in the group.

I personally feel that the public relations for ham radio is stuck in old concepts and needs to be brought up to date and broadened — lots more people of all kinds could benefit from the friendliness and increased people-to-people communication. This is undoubtedly one of the reasons for the wild rush into CB. As to upgrading skills, I feel that an appeal to more specific talents could be made from the broader beginning base. People seem to love awards. Even if they came into ham radio without code, they could be motivated by awards and contests to learn it just for the hell of it — rather than making it a grim requirement which turns off quite a few. Frankly, I think that it would not be too difficult to teach code to anyone but for the psychological component. I work against this everyday in my own classes — the no-confidence syndrome. Incidentally, I have had absolutely no background in radio and I avoided math and science classes like the plague when I was in school. I was convinced that I was a moron in math and had absolutely no ability in technical things. I do believe that I have above-average intelligence and I am stubborn when I make up my mind to try something. I have been advised to memorize the handbook in order to make the General exam, but I prefer to try to understand what I am doing instead. It has already given me quite a lift to discover that I have been psyching myself out all my life and that I can, with study, learn some of these things which I formerly believed the province of men. I am sure that I represent many other women in this respect. I am also remembering the wistfulness I have heard in the men's voices on the radio telling my husband how great it is that I am joining him in class, how much they wish their wives would do the same. How about it, do you think we can make radio more human to XYLs?

Froma Reiter WN6IWT
Fullerton CA

P.S. Obviously, none of this could have come about for me without my husband's strong, warm support and his obvious pride in my accomplishments. He bragged about my getting the Novice license so much that I was sure my blushes could be heard over the air waves. Whether you are interested in any further confessions, thanks for listening.

Sounds great, Froma . . . let's see those articles and maybe we can get more XYLs into the act . . . and on the air — Wayne.

73 READER SERVICE

Circle appropriate Reader Service # for desired company brochures, data sheets or catalogs and mail in to 73. Include your zip code, please. Send money directly to advertisers. *LIMIT: 25 requests.*

ADVERTISER INDEX

From 73 . . .
60-63

☐ *NEWSSTAND* ☐ *SUBSCRIPTION*

READER SERVICE
73 Inc., Peterborough NH 03458
MAY 1976

Please print or type.

Name ____________________ Call ________

Address ______________________________

City _________________________________

State ____________________ Zip ________

Coupon expires in 60 days . . .

propagation

by
J. H. Nelson

EASTERN UNITED STATES TO:

GMT:	00	02	04	06	08	10	12	14	16	18	20	22
ALASKA	7A	7A	7	7	7	7	7	7	7	7	7	7
ARGENTINA	14	14	7	7	7	7	14	14	14	14A	14	14
AUSTRALIA	14	14	7B	7B	7	7	7	7	7	7	14	14
CANAL ZONE	14	14	7	7	7	7	7	14	14	14	14	14
ENGLAND	7	7	7	7	7	7	7	14	14	14	14	14
HAWAII	14	14	7B	7B	7	7	7	7	7A	14	14	14
INDIA	7	7B	7B	7B	7B	7B	7A	14	14	14	7A	7
JAPAN	14	7	7	7	7	7	7	7	7	7	7	14
MEXICO	14	14	7	7	7	7	7	7	14	14	14	14
PHILIPPINES	14	14	7B	7B	7B	7B	7B	7	7	7	7A	14
PUERTO RICO	14	7	7	7	7	7	7	7	14	14	14	14
SOUTH AFRICA	7	7	3A	7	7B	7B	14	14	14	14A	14	14B
U. S. S. R.	7	7	7	7	7	7	7A	14	14	14	14	7
WEST COAST	14	14	7A	7	7	7	7	7A	14	14	14	14

CENTRAL UNITED STATES TO:

GMT:	00	02	04	06	08	10	12	14	16	18	20	22
ALASKA	7A	7A	7A	7	7	7	7	7	7	7	7	7
ARGENTINA	14	14	7A	7	7	7	7	14	14	14	14	14
AUSTRALIA	14	14	7A	7B	7	7	7	7	7	7	14	14
CANAL ZONE	14	14	7	7	7	7	7	14	14	14	14	14
ENGLAND	7	7	7	7	7	7	7	7	7A	14	14	7A
HAWAII	14	14	7B	7	7	7	7	7	7	14	14	14
INDIA	14	14	7B	7B	7B	7B	7B	7B	7	7	7	7
JAPAN	14	14	14	7	7	7	7	7	7	7	7A	14
MEXICO	14	7	7	7	7	7	7	7	7	7A	14	14
PHILIPPINES	14	14	14B	7B	7B	7B	7	7	7	7	7A	14
PUERTO RICO	14	14	7	7	7	7	7	14	14	14	14	14
SOUTH AFRICA	7	7	3B	7	7B	7B	7A	14	14	14	14	14B
U. S. S. R.	7	7	7	7	7	7	7	7	7	7A	14	7

WESTERN UNITED STATES TO:

GMT:	00	02	04	06	08	10	12	14	16	18	20	22
ALASKA	7	7A	7	7	7	7	7	7	7	7	7	7
ARGENTINA	14A	14	7A	7	7	7	7	7A	14	14	14	14
AUSTRALIA	14	14A	14	14	7A	7	7	7	7	7	14	14
CANAL ZONE	14	14	7	7	7	7	7	7	14	14	14	14
ENGLAND	7	7	7	7	7	7	7	7	7	7	7	7A
HAWAII	14	14A	14	14	7	7	7	7	7	14	14	14
INDIA	14	14	14	7B	7B	7B	7B	7B	7	7	7	7
JAPAN	14	14	14	7	7	7	7	7	7	7	7A	14
MEXICO	14	14	7	7	7	7	7	7	14	14	14	14
PHILIPPINES	14	14	14	14B	7B	7B	7	7	7	14B	14	14
PUERTO RICO	14	14	7	7	7	7	7	14	14	14	14	14
SOUTH AFRICA	7	7	3B	7	7B	7B	7B	7B	7A	14	14	14B
U. S. S. R.	7	7	7	7	7	7	7	7	7A	7A	7	7
EAST COAST	14	14	7A	7	7	7	7	7A	14	14	14	14

A = Next higher frequency also may be useful
B = Difficult circuit this period
N = Normal
U = Unsettled
D = Disturbed

1976 MAY 1976

SUN	MON	TUE	WED	THU	FRI	SAT
						1 U
2 D	3 U	4 U	5 U	6 U	7 U	8 N
9 N	10 N	11 U	12 U	13 U	14 N	15 N
16 N	17 U	18 U	19 U	20 D	21 D	22 D
23/30 D/U	24/31 U/U	25 U	26 N	27 N	28 N	29 N

73

AMATEUR RADIO

JUNE 1976
$1.50

VHF SPECIAL

PLUS

I/O COMPUTER SECTION

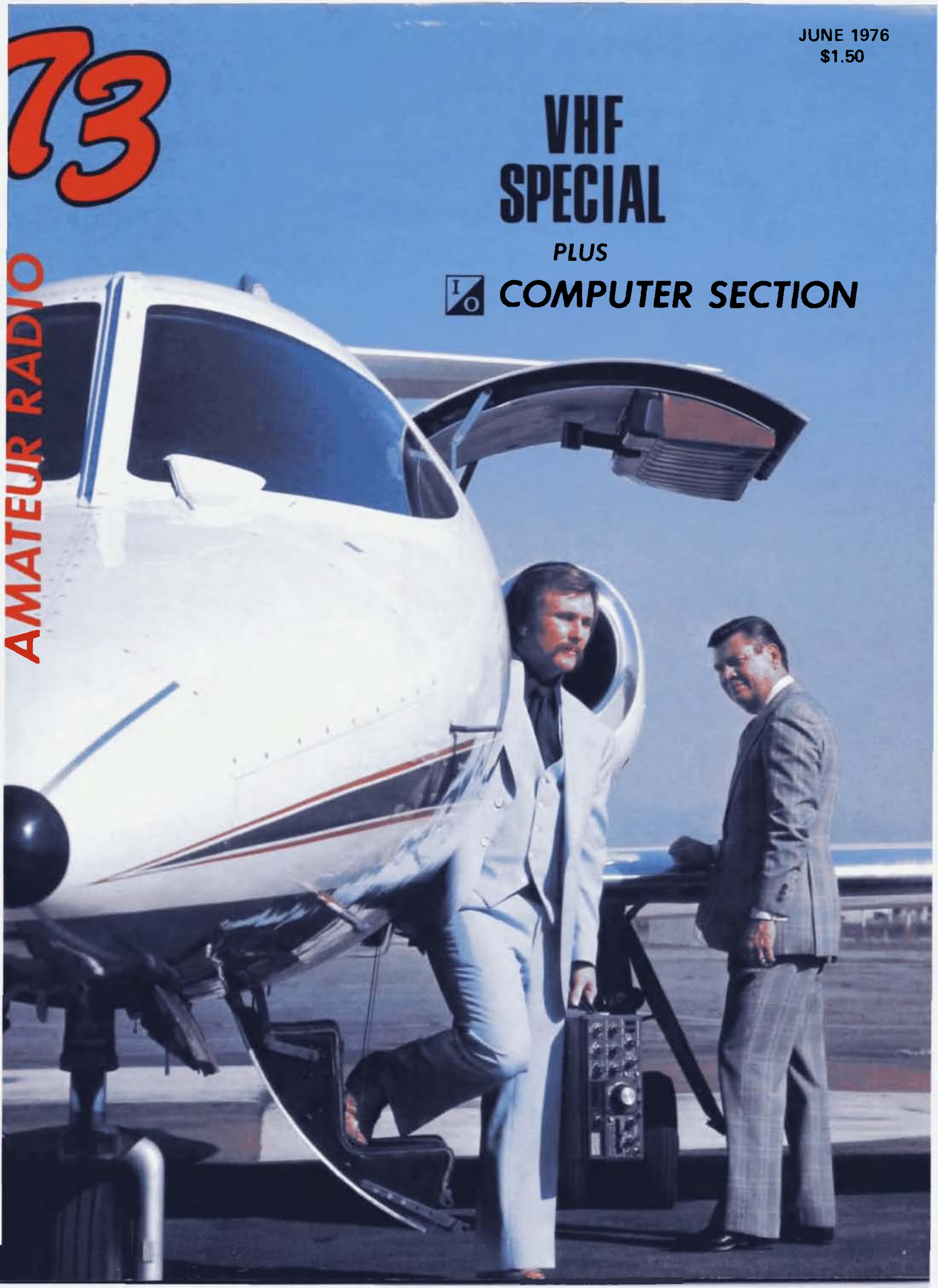

73

#188 JUNE 1976

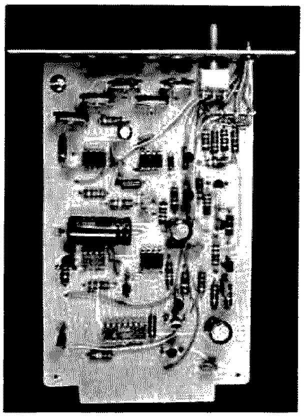

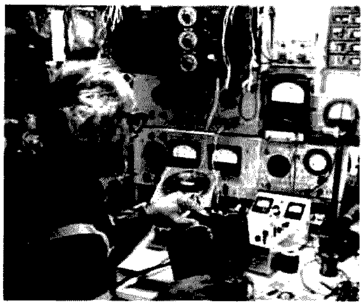

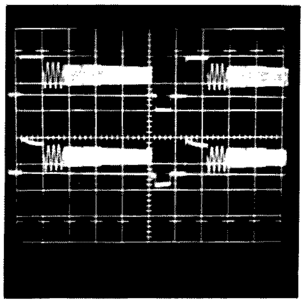

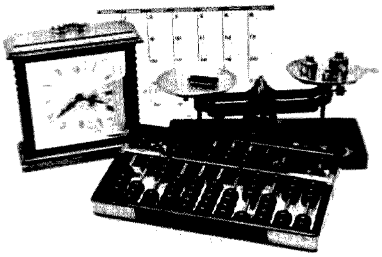

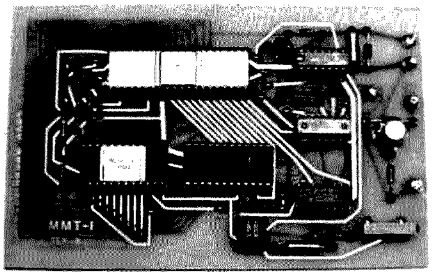

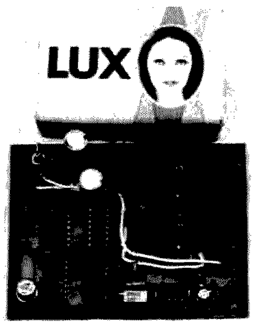

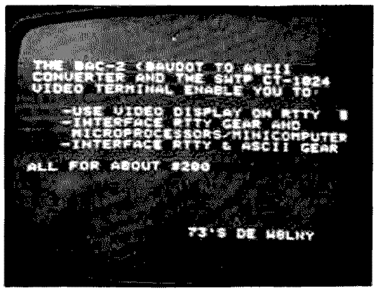

COVER: The new Kenwood TS-820. Lear jet courtesy of The Great Atlantic and Pacific Aeroplane Company, and Lacy Aviation, Van Nuys, California.

73 Magazine is published monthly by 73, Inc., Peterborough NH 03458. Subscription rates are a ridiculously low $10 for one year worldwide, $17 for two years, and $17.76 for three years. Second class postage paid at Peterborough NH 03458 and at additional mailing offices. Phone: 603-924-3873. Microfilm edition — University Microfilms, Ann Arbor MI 48106. Tapes — Science for the Blind, 332 Rock Hill Rd, Bala Cynwyd PA 19904. *INCLUDE OLD ADDRESS AND ZIP CODE WITH ADDRESS CHANGE NOTIFICATION.*

be my guest

visiting views from around the world

"God Bless You All"

In the hours following February's earthquake in Guatemala, the only news reaching the outside world of the catastrophe emanated from a small group of amateur radio operators in the stricken country and in the United States.

The communications chaos was such that it fell upon these hams to inform the Red Cross, the State Department, the Guatemalan embassy here and other organizations of the extent of the disaster and the type of assistance needed.

One of the first on the air was Clyde Stanford, who works for the Central American Mission in Guatemala City. He roamed the city in his short wave equipped car, giving vivid accounts to the outside world of the devastation.

Monitoring Stanford in Miami was the amateur radio listening post of the Dade County Chapter of the American Red Cross, which immediately relayed his reports to Red Cross national headquarters here.

The damage figures given by Stanford over TG9LW (his station's call letters) and by Don Fiester, another amateur in Guatemala City, over TG9DF, were at first thought to be highly exaggerated.

Later information, however, proved they were understated if anything.

In the days since the earthquake, the amateur operators have turned their attention to obtaining health and welfare inquiries from people in this and other countries worried over the fate of relatives and friends in Guatemala.

Among the ham operators here who have been on the air almost continually since the disaster is Lewis Bloch of suburban Fairfax Station, Va. For a brief period following the quake, he was a main source of information for the Guatemalan embassy on the events taking place in the homeland.

Now Bloch, who is a publisher working out of his home, is handling welfare messages by the dozens. Typical is one for the American Red Cross.

The organization was contacted by John S. Whiting of Deerfield, Ill., whose son was working at the Spanish School in the city of Antigua when the disaster struck. Concerned that he had heard nothing about the boy's fate, he called the Red Cross here.

Within an hour, Bloch was on the air, asking amateurs in Guatemala if they could provide some information about the younger Whiting.

Bloch is an old hand in disaster situations. When an earthquake struck in Nicaragua a few years back, he recalls that he was on the air for days relaying reports and requests for assistance.

Another amateur, Joseph W. Miller, Bloch's next door neighbor, has handled over 200 messages since the earthquake, working as a volunteer for the Fairfax County Chapter of the Red Cross. As Bloch puts it, "Miller has been the workhorse on the operation."

Bud Fink, chief of radio communications for the American Red Cross, has nothing but praise for the ham operators. Through an agreement the organization has with the ARRL, the operators funnel vital information to the organization not only on foreign but domestic disasters as well.

The American National
Red Cross

* * * * *

The cold statistics of death and destruction from last week's earthquake in Guatemala caused days of anguish to thousands of relatives in the United States, but ham radio stations in both countries have begun to bring relief to some, grievous certainty to others.

At the Hall of Science in Flushing Meadow, Queens, volunteer operators yesterday manned Amateur Radio Station WB2JSM to relay scores of inquiries from anxious relatives in the Metropolitan area and incoming responses from fellow hams in Guatemala and the Red Cross station in Miami.

"Some of the news, fortunately even most of it, has been good," said Robert C. Reiley, call letters WB2FHN, the executive director of the Hall of Science and a radio buff since 1939. "But there's been bad news as well."

GOOD NEWS

Mr. Reiley said that the station he was manning was in touch with about a half dozen English-speaking hams in Guatemala, including a young Californian known as Joanne K6GFW, who operated with a portable radio transmitter and emergency generator from her home just outside Guatemala City.

Among the good news received from Joanne, Mr. Reiley reported, was a message for a family in Elmhurst, Queens, whose daughter, a registered nurse married to a Dutch United Nations official, had not been heard from. Her father, Earl Cosgrove, said last night that the young couple, Ruud and Marie Anne Ooye, were in Guatemala last Wednesday when the earthquake struck.

John Gorman WB2ROF sends traffic to Guatemala City, while anxious relatives wait for reply.

Martin Schwartz W2EPZ, a 44 year veteran of ham radio, prepares traffic to be sent to Guatemala.

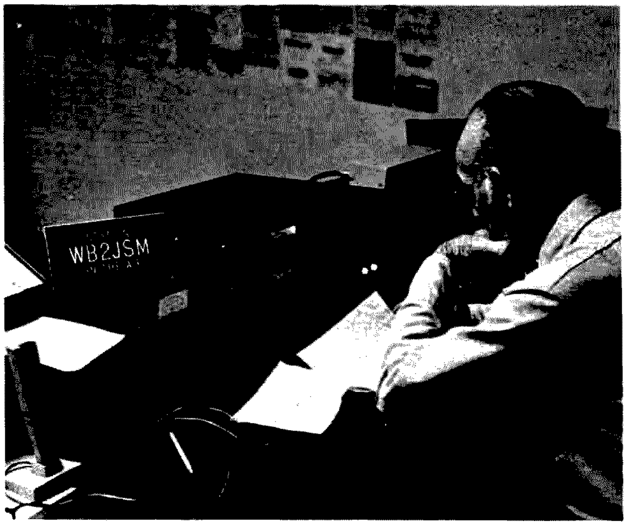

Photos courtesy of Rick Moran WA2BBG, Photo Associates, New York.

"Even the U.N. couldn't get them," Mr. Reiley said, sitting at his bank of radio equipment with two other volunteers, Conrad Eiselen WB2FGB and Dan Algeri WA2MXI. "But we got through all right."

NUMBER HELPS

He said Joanne had been able to find out for the Cosgroves that their daughter was well and working in an emergency hospital in the Guatemalan town of San Lucas.

Mr. Reiley said most of the nearly 200 inquiries relayed from Flushing Meadow Park up to last night were from Guatemalan residents in this area. He said the station, the most powerful of its kind in the city, would be operating again today from 10 am to 10 pm and could be reached by calling 699-9400.

"If we have a telephone number to call down there, that helps," he said. Inquiries without telephone numbers would be routed via Miami and Pan American World Airways, which volunteered to take the messages to Guatemala City several times a day, Mr. Reiley reported.

The station, in the Hall of Science, normally serves to demonstrate amateur radio operations for visitors and tourists. According to Mr. Reiley, the hall and the station now shut down Mondays and Tuesdays, because of the city's financial straits, even though it is operated by a private nonprofit body.

NEWCOMER COMMENTS

But because of the Guatemalan disaster, volunteers like Mr. Reiley come in to operate the station as they have in previous emergencies, such as the earthquake in Nicaragua, in 1972.

One of them, Mr. Eiselen, is a 71-year-old retired service manager who got his license a few years ago from what Mr. Reiley termed the largest amateur radio school in the United States, an adjunct of the Hall of Science.

"I'd been fooling with shortwave radio ever since I was a kid," Mr. Eiselen remarked, "but I always wanted to become a real radio ham." He said that if Mr. Reiley needed him again today, he'd be there.

Wolfgang Saxon

Reprinted from The New York Times, *Tuesday, February 10, 1976. Copyright 1976 by the New York Times Company. Reprinted by permission.*

* * * * *

At 4:04 am on February 3rd, a killer earthquake dealt a swift and unsuspecting blow to the sleepy country of Guatemala.

Roofs, walls and entire buildings crashed down, killing, injuring and trapping thousands of citizens of Guatemala City and surrounding towns and villages. Power, water, and telephone lines were disrupted by falling buildings. Fires in various parts of the city burned out of control for the lack of water pressure in fire fighting.

Frantic searches began for friends, relatives and loved ones. Muffled cries could be heard from persons buried in tons of rubble. Men, women and children dug frantically among fallen structures to help those trapped beneath. Far too often, help arrived late, as another individual died.

The initial hours were the worst, for no one knew the extent of the damage. With nearly 100% of communication facilities disrupted, the only way for messages entering or leaving the country was via radio sources. Unfortunately, most radio communications were inoperative due to the lack of emergency power.

Once the news of the disaster reached the amateur radio community, hams in the western hemisphere, and in the United States particularly, focused their attention and abilities on the shaken country.

The disastrous earthquake gave hams another opportunity to show dedication and expertise in establishing communication channels to facilitate the passing of emergency traffic between the U.S. and Guatemala.

Previous experience in traffic handling through the Red Cross, AREC, Local, Area, and Regional NTS gave hams the confidence and practical experience to step in and set up communication networks within hours of the disaster. This proved the effectiveness of the National Traffic System in training operators to handle messages during an emergency.

Hundreds of ham operators across the American continent were actively participating – either passing/receiving traffic, or assisting by monitoring emergency frequencies.

Many amateurs know the correct operating procedures used during an emergency, and, by virtue of their experience, are a helpful asset to the net control station who is trying to coordinate the incoming/outgoing traffic.

Others who are not acquainted with traffic handling can turn a smooth operating net into a nightmare. Many hams who participated in the Guatemalan crisis know of this first hand.

It is hard to state the exact rules of emergency operation that should be observed. Each situation may be different. However, there are general rules that should be followed.

1. *QRM.* Do not transmit without listening. This is probably the most important rule to follow explicitly. Many times during the Guatemalan crisis, amateurs would break in and call CQ or ask what net is in operation. Someone would have to tell the fellow he is on an emergency net, thereby adding additional QRM to answer his question – or net control would have to tell him to stand by until he could pick him up. In most cases, portions of traffic would have to be repeated because one person did not listen before transmitting. Multiply this by several hams doing this every five minutes and you can begin to understand the problems it causes in net operations.

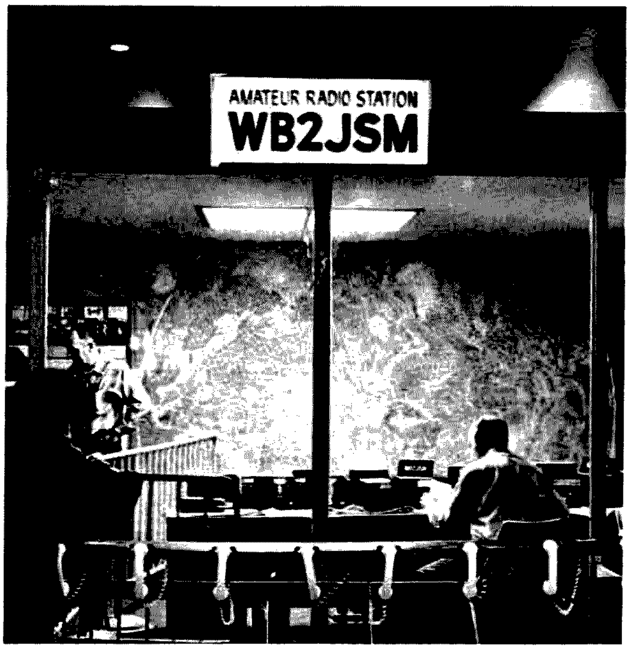

Kids and adults monitor the traffic from station WB2JSM by using handsets provided, while station personnel collect and call out traffic within.

Another unforgivable amateur "sinner" is the ham who calls net control and says, "This is WA5???. I am just standing by listening. Can I be of any help?"

If you are really interested in helping, you will monitor the frequency until a request for assistance is transmitted by net control.

Remember, only you can keep the QRM level down.

2. *Accuracy.* In message handling, this is all important. Do not try to impress the station you are transmitting to by sending beyond their copying speed. If you are receiving the message and the station is going too fast, ask him to QRS. It takes just as long to answer requests for "fills" as it does to send at an appropriate speed the first time.

After trying a full day to deliver a message to California from Guatemala via land line, I finally asked the operator to check the number. Because one digit was transmitted incorrectly, a mother had to go through another sleepless night before she learned that her son was alive and well.

Remember, speed is not requisite, but accuracy is.

3. *Authenticating messages.* During an emergency, all messages, and especially official ones, should be written and signed by the originating party. A telephone number on the message where the signatory party can be reached is also advisable. This is normal procedure for routine messages during an emergency, too.

Remember, you are responsible for all messages transmitted from your station. So be sure your messages have authenticating signatures.

Message handling is not everyone's forte, but if you want to be of service during an emergency situation, at least inform yourself of the correct operating procedures.

There are two very helpful booklets that may be ordered from the ARRL: *Operating An Amateur Radio Station* (THE COST IS A NOMINAL 50 CENTS) and *Public Service Communications* (FREE). These two booklets will give you everything you need to know except the practical experience which comes with on-the-air operation.

I don't believe I will ever have a higher satisfaction than having been able to deliver a message to someone to tell them his loved ones were alive and well.

One memorable phone call to a Spanish-accented lady will always mean something special to me. When she answered the phone, the operator said, "This is a long distance collect call from an amateur radio operator who has a message for you from Colonel Juan Ortega (name changed) in Guatemala Cit . . ." The operator had not finished the sentence when the excited lady interrupted saying, "Oh yes, yes. That's my son! That's my son!"

Once I delivered the message informing her that her son was alive and well, she said, "You will never know how much it means to me to receive this message. Ever since the earthquake, we didn't know if our son was alive or dead. God bless you for helping to find my son – God bless you all."

Daniel L. Kayser WB8VZX
Willard OH

A Representative Democratic Republic?

Not long ago, the ARRL, through *QST*, announced its interest in becoming involved in repeater coordination. Their idea was to appoint regional ARRL frequency coordinators to either work with existing councils or, in some cases where no coordination exists, become the coordinating facility. It was stated that the reason for this was to recognize the fine work now being accomplished by individual coordinators and/or coordinating councils and thereby give official League backing to this work. While I totally agree that official League recognition of repeater coordination efforts will lend a lot of much needed credence to this work, I and others I have talked with are bothered by two distinct things. First, it is not clear who would be "top dog" in such a setup: the existing council or the ARRL-appointed coordinator. If a case should arise in which the two found themselves diametrically opposed on a given matter, whose decision would be final? Secondly, the concept of "appointing" a person to this position by an organization outside a given area, rather than permitting all interested amateurs from within that geographic area to "elect" one of their peers to that position, does not seem exactly fair. The very reason for the success of most coordinating councils has been the fact that they are elective bodies rather than appointive. Thereby, every amateur involved in such efforts feels that, through the electoral process, he or she does truly have a voice in matters.

Finally, I consider the League proposal a bit shortsighted in that it is designed only to recognize repeater frequency coordination and is thereby not totally representative of all VHF/UHF oriented amateurs and all VHF/UHF operation in various modes. For example, it gives no assurances whatever that the rights of non-FM interests will be protected in the future. It is my feeling that any large scale frequency coordination effort must be total. It must not only be voluntary and elective, but must also represent every special interest and mode operating VHF/UHF, including such specialties as ATV, SSB, OSCAR, RTTY and yes, even AM. It must guarantee some voice to all, since it will be the amateur — not the League or any organization — that will ultimately decide the destiny of any band and mode.

Now please don't think that I doubt the League's sincerity in this matter; quite the contrary. I strongly believe that the League is sincerely looking out for the welfare of the overall amateur community. Frankly, I know of no other individual or group within our community with the capabilities of properly representing us to Washington and to the rest of the world. If I felt any other way, I would not have joined it. About the only thing that bothers me in regard to the League is their "hang-up" on having to always "appoint" rather than elect, especially to positions such as we are now discussing. In my mind, the position of League Area Coordinator is as important as the position of Division Director. He or she will be holding a good part of a given geographic area's VHF/UHF spectrum utilization in his hands, and therefore I feel that those affected by decisions of such an individual should have the ultimate decision as to just who such an individual will be. But, is this still the best way — or is there another alternative? I think that there is.

The idea that I am about to pass along is just that: an idea. A starting place from which to go forth. Admittedly, it has faults (no plan is perfect), but it meets two prime prerequisites. First, it is as close to being perfectly democratic as is possible. Other than for procedural matters, there is no single individual appointed by any other group or individual. From the local "grass roots" level to the upper echelon, all those serving are elected by their peers, elected by their fellow amateurs as their representatives. Secondly, it allows amateurs involved in VHF and UHF to totally determine, within the framework of the Commission's Rules and Regulations, the future development of that part of the amateur spectrum. In this way, we can be assured of uniformity in nationwide growth and thereby provide positive leadership and direction internationally. Starting to sound interesting? Well, all this is possible only if all amateurs interested in the future of VHF and UHF communication are willing to get involved.

Total involvement of all interested amateurs is the simple key. The idea is to build a national voluntary frequency coordinating council, one that would not only look out for the welfare of repeaters, but also would represent all aspects of VHF and UHF operation. Refer to Fig. 1; this is how it would be built. A city, state or other geographic area interested in working on such a plan would form "Workshop Groups" made up of individual amateurs of similar interest. These "Workshop Groups" could take the form of local coordinating councils such as we now have only for repeater owners, or perhaps the less formal "club" approach. Since I live in Southern California, let's use it as an example. Southern California is a given geographic area with two functioning VHF coordinating groups already in existence. Two meter and 220 MHz repeater systems are coordinated by the Southern California Repeater Association, while systems on 50 MHz and 450 MHz and up are the coordinating job of the California Amateur Relay Council. Such organizations as these would continue to operate without any change except for one small item, this being the election by the general membership of such organizations of a representative to a regional coordinating body to be described later on.

Now let us suppose that there soon developed a lot of SSB activity on two meters (and such is quick becoming the case in many parts of the nation as multi-mode transceivers such as the Multi-2000 and and TS-700, to name but two, proliferate among the amateur ranks). An area SSB users Workshop or Council could be formed locally to set up specific guidelines as to operational parameters of this mode, if the amateurs involved thought it was necessary. For example only, let's assume that the SSB Coordinating Council decided that a number of specific frequencies should be voluntarily set aside as designated calling frequencies. In a like manner to the repeater council, they could coordinate the same and ask that all amateurs voluntarily, and that word must be underscored, *voluntarily*, respect these allocations. We must never forget that no one amateur or group of amateurs owns or has a god-given right to any specific frequency.

RTTY enthusiasts, ATVers, AMers, OSCAR users, etc., could form their own representative area group to coordinate efforts of amateurs involved in that given mode and/or band. Regularly, these area groups would have their elected representatives meet locally to discuss and hopefully solve on a local level problems either between or common to some or all. They would learn to interact with each other and develop lines of communication that would be of mutual benefit. Never again could an amateur say, "Well, I was not asked my

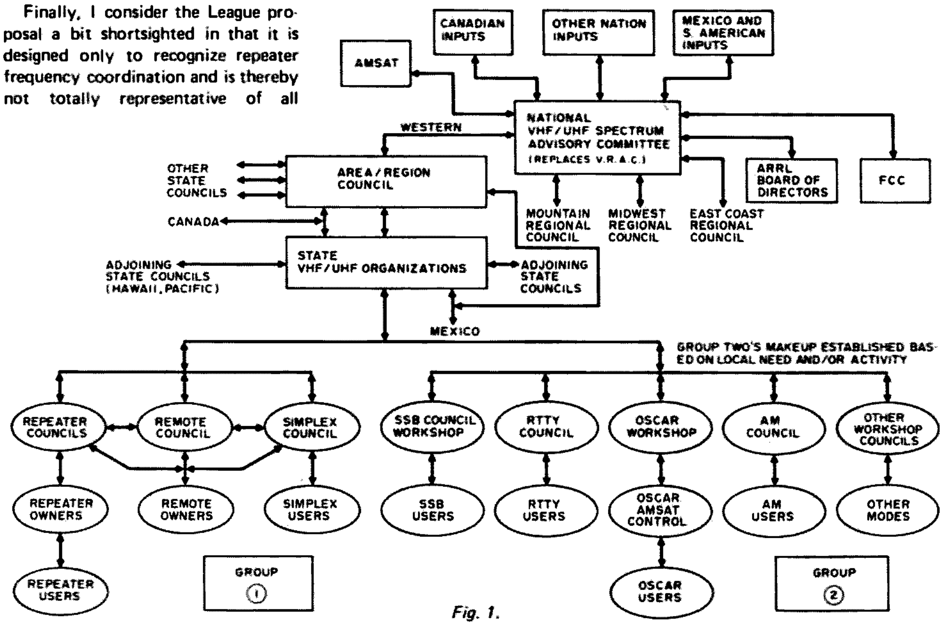

Fig. 1.

opinion on this matter." The forum for his or her specific special interest would be there if he or she had the interest to make their voice heard. That excuse would be gone.

Also of note is that users of a specific mode or band segment would be responsible for solving their own problems unless such problems involved users of a different mode or band segment. If an AM station, let's say, were playing havoc with SSB operations, the two Workshop Councils involved could get together to solve the dilemma. Other interest groups need not get involved, and indeed should not, unless requested to try to help mediate the dispute as a disinterested third party. While total intercommunication would exist between all such groups, no one group would ever become "king of the hill" over the other groups.

Keeping with our example, the logical next step is some form of statewide organization made up of elected representatives of each of the just described local groups. The statewide organization would be comprised of elected representatives of each of the interested local groups, i.e., repeater council, remote owners council, AM users council, etc. Such a group would not get involved in local matters between its members, unless it involved solving a problem that had occurred between two neighboring groups of the same interest. Then only members of groups of similar interest would get involved in any form of the mediation or solution effort. That is to say, should a problem develop between two neighboring RTTY organizations, only members of the statewide council involved in that particular mode and acting as delegates from other RTTY groups would get involved. Repeater council representatives, SSB group representatives, and all other parties would keep hands off unless asked to help mediate the problem. Basically, the statewide organization would only involve itself in matters that were impossible to solve on a purely local level.

Another important responsibility of the statewide organization would be to establish and maintain lines of open communication with adjoining statewide organizations. Since radio signals do not observe "the state line," problems between adjoining states might occur from time to time. It would be the prime responsibility of these statewide organizations to solve such problems on this level. For example, the South Podunk Repeater Association in Texas and the XYZ Repeater Committee in New Mexico both coordinate a repeater to 147.84/.24 at the same time and they happen to be geographically separated by only 50 miles. The way things seem to be today, a repeater war would probably be imminent unless one of the systems were to move. But who is to move? Obviously each repeater would demand its rights and complain bitterly to whoever coordinated it to get that "other machine" off its frequency. With little or no interaction and intercommunication between coordinators, as we have today, a problem such as this would be somewhat insurmountable. But what if there was good communication between neighboring coordination efforts? First, if this were the case, it is doubtful that a problem such as this would ever happen again. A simple exchange of proposed allocation lists and a few telephone calls could solve such a problem before it ever starts.

OK, though, let's pretend (hopefully) that we have such an outstanding problem at the time such a coordination effort is initiated. The first thing would be for the two area coordinating bodies to arrange for representatives of both organizations, along with both system owners, to get together and start talking, rather than hurl brickbats at one another. It is simply amazing what can actually be accomplished when feuding parties learn to communicate rather than hurl insults. On both sides of the continent I have personally seen such happen after all other methods of solving such problems have resulted in a dead end — and I mean all methods! If it were pointed out on a technical level that there was available something as simple as a shift in antenna pattern or a much better channel pair for one of the systems, and that such information was going to be made public to the entire local amateur community (since it was in their best interest to know that machine B would technologically function far better if it was willing to bow to the will of the majority — ah, here we get into peer pressure once more!), then machine B would be hard put to justify its stand on the matter. The same would hold true for machine A if it were deemed that its stand was unreasonable. Again, the entire secret, if it must be deemed such, is for members of the amateur community to learn the art of personal, open-minded, two way communication, and develop lines of interaction from this. Again, though, it should be stipulated that the only people who should be involved in such negotiations are those

Continued on page 78

Children Need Discipline

There has been a good deal of concern expressed by members of the amateur fraternity over many of the Commission's actions in recent times — surprisingly enough, even *deregulation* is being met with resistance and even hostility in some quarters. Much of it is simple inertia, the well-known natural human reluctance to accept change of any kind. And, "We need rules, stiff rules, with teeth — otherwise, the service will become a shambles," is an oft-heard reaction these days.

One also hears the statement, "Children need discipline."

The latter might perhaps be true — for children. The former? Let's look first at some of the Commission's recent deregulatory actions in other services, notably broadcasting, commercial, and even CB.

Broadcast: Inspections of equipment reduced to once weekly instead of the former five days out of seven; deletion of the requirement for station frequency monitors; allowance of 125% positive peak modulation for AM; allowing operators to log meter readings at three-hour intervals, instead of half-hourly. All of this, and more, in recognition of "state of the art." Modern broadcast equipment simply does not need the attention that earlier gear — around which the earlier rules were tailored — required.

Commercial: Deletion of the requirement for annual frequency, modulation and power measurements. This, finally, in recognition of the fact that the majority of two-way shops make these measurements routinely whenever a radio requires servicing — and if a radio is operating satisfactorily, these parameters probably *are* within tolerance.

CB: A general relaxing of a whole set of highly restrictive rules that were almost universally ignored by a vast majority of users. This, along with a reduction in license fee, has resulted in a swing toward more users actually becoming licensed, more use of callsigns on the air, and thus — however infinitesimally — more effective supervision and enforcement. (Ah yes, but what about the "sliders"?)

So now, what of the recent moves deregulating *our* service?

Relaxing of licensing rules for repeaters, particularly with regard to the technical showings, for instance: true recognition of "state of the art," the "art" in this case being the technical excellence of just about every repeater ever put on the air by an amateur group. (To say nothing of the saving of time and paperwork for the Commission itself!)

Logging: No one says you *can't* keep a complete log if you so wish; the new skeleton requirements meet the Commission's needs for enforcement purposes and lighten the recordkeeping burden all around.

Cross-banding: A generally desirable permission, and, so far at least, with little or none of the "cluttering up" of the bands with the indiscriminately dumped signals that many amateurs feared.

And now, the latest proposal: Eliminating of the "portable" and "mobile" designators. It is presumed that we will be allowed to say those words if we wish, and, where necessary for clarification, surely we will continue as we always have. In situations where there's no real need for anyone to know if we're at home or away or rolling or still, we'll be able to save a few words, a few seconds of air time.

Really, from this seat at any rate, we should feel complimented that we are being recognized for the generally well-disciplined, well-motivated group that we know we are, and that our technical prowess is being equated with that of the people in the broadcast and commercial fields. Genuine progress in any human endeavor should never be feared, should indeed be welcomed with open arms. We *are* making progress, and the move toward deregulation certainly seems to be official recognition of the fact.

Jim Seeley WB8MTD

Reprinted from The Action Mini-Mag, *Cascades Amateur Radio Society, Jackson MI.*

LETTERS

MUSHIE

Since my father, Sen. Edmund S. Muskie, was not involved in this year's New Hampshire primary, I thought I had heard the last complaint of him being "indecisive, soft, or mushie on the 'issues.' " But then I received my April copy of *73* and noticed that the "issue" was addressed to "S. Mushie." Was it a political comment or just a coincidence that I received it on the day after the February 24 primary? It probably doesn't mean mush to you, but if you correct the mailing label I might consider taking you up on your great $17.76 offer for a three year subscription extension. I am now studying for a ham license after being absent from ham radio for more than ten years. I had a subscription to *73* for several years about 1964 when I was licensed as WN3DCB (Democratic Congressman's Boy) in Washington. The changes in ham radio and in *73* since that time are very exciting. I really enjoy working with and learning about ICs. Good luck — hope to work you some day on CW, Wayne.

Stephen Muskie
Saco ME

NOT TOO BAD

Well, you've done it again. I've just taken my Feb. issue of *73* out of the mailbox, read it from cover to cover, enjoyed every page of it, and got the urge to write to you again!

First of all, on your comment on R.F.I., I own and operate with two friends (both hams) a stereo, CB, and amateur equipment shop. We both sell and service most makes of home entertainment equipment and I must admit that there is nil in any kind of shielding for rf energy. We have found that 98% of all of the inexpensive and expensive stereos, tape players and such have no really good shielding. All of them have open chassis (no bottom plate), wood or plastic cabinets (not even foil around the inside) and I don't think that the manufacturers ever heard of by-pass caps on the ac line! We have found ways to eliminate most cases of R.F.I. from AM/FM and SSB amateur and CB sets; if any of *73*'s readers want some help, have them write me at the shop and I will be glad to pass along some of the information that we have compiled over the past 2 years on elimination or reduction of R.F.I. problems.

Second, on CBers getting into ham radio. Ever since we have opened the shop, I have kept my IC-2F tuned to the 01-61 repeater in New Haven CT. We have quite a lot of activity on the machine, and I like to listen to the local boys rather than the mess on ch. 19. When the local CBers come in for service or just to chat for a while, they always are attracted to the IC-2F. After a demonstration of 2m FM, some interest is kindled, but usually fades after an explanation of how to get a license. This happens quite a bit, but 2 of them showed more interest and asked questions and showed a real interest. To make a long story short, they both passed the test and are now licensed as WA1VVR and WA1VXH. Both are very active on 2m, and are starting to get on RTTY — not too bad for a couple of CBers. I think that if any ham will take the time to show what ham radio is about, get the spark kindled, and help them with the code and theory, most CBers can and do become good ham operators as these two people have shown to us here. Also, we have started classes for the Novice and General class licenses at the store; enrollment now stands at 26, with 19 of them now in CB. I'll keep you posted on their progress, and on the dropout rate (which I think will be high, but you never can tell).

I'm sorry to be so long-winded, but your editorial stirred my mind — which doesn't happen too often. Keep up the good work at *73* and maybe ham radio can benefit from your wisdom.

Tom Cullen K1WXK/W1MXZ
Audio Associates
1213 Old Colony Rd.
Wallingford CT 06492

THE REAL ONE

I have read with great interest the article on a "Startrek Communicator" in the February issue of *73*, because my younger son is a dedicated Trekkie. When I showed him the article, however, he informed me that the described device obviously was an inferior fake. As apparently every true Trekkie knows, the full description of the real Starfleet Communicator, Type 1, including circuit diagram and parts list, is contained in the Starfleet Technical Manual. On Planet Earth this manual (copyright Franz Joseph Designs) is distributed by Ballantine Books, 201 East 50th St., New York NY 10022. The Manual, which is not classified, is apparently available in many bookstores. The circuit diagram is very interesting and I think the designers of ham radio equipment could learn quite a lot from the simplicity and efficiency of this design. After all, to get a range of 12,000 km (7500 miles) with a three-transistor hand-held transceiver on 27.125 MHz during the bad part of the sunspot cycle is not really easy. But maybe it is the Starfleet Communicators which are responsible for some of the funny signals one can hear at around 11 meters (440 inches) if one has a general coverage receiver.

Erich A. Pfeiffer WA6EGY
Granada Hills CA

LET'S GET BACK

I have been a licensed and very active ham for 15 years now and have yet to understand what computers and citizens band radio criticism have to do with the hobby.

Every time I pick up *73 Magazine* from the mailbox, I am hit in the face, directly, from cover to cover, with either massive advertisements for computers (for who knows what) or some outrageously priced two meter rig, which is nothing more than a "legal" CB radio any more.

I am sorry to say that 98% of the articles in the magazine don't even fit the average wealthy amateur, let alone the non-wealthy one.

Don't get me wrong, I am not an "old fogie" on this subject but am simply wondering why the sudden change from an interesting amateur radio publication to a technical manual for sophisticated design engineering of computers, with a little CB humor thrown in to break up the monotony?

I am active on Oscar 6 and 7 so I don't hate VHF in any way other than the way it is used on the FM segment. I can hear the same junk on a single channel CB radio for much less than $250-$300 for a two meter rig.

Let's get back to amateur radio; if I wanted to learn about computers or how high a price I could pay for some cheap transceiver, I would certainly subscribe to a magazine designed for that type of audience.

Gary N. Babcock WA5BMN
Portales NM

GET THE WORD OUT

Have really enjoyed your technical articles, primarily those on I/O. One of your advertisers has a unit for sale, a Univac 769 line printer, and I sure would like to get in touch with these users. I have one and need to find out how to interface it to a computer. Would like to set up sort of a clearing house on applications, parts, etc. If anyone is interested, my phone is 817-292-5211, or you can write:

Jim Beistle WB5BLX
3728 Wilkie Way
Ft. Worth TX 76133

P.S. Hope you can get the word out and keep the good articles going. Who knows? I might even write one someday.

ROY ROGERS' HORSE

I sympathize with all who have had dealings with a certain firm (same name as Roy Rogers' horse) and have run up against a stone wall.

After a four month exercise in futility with the above firm and the famous Miss "D" (if you've talked or have written to her, you know who I'm referring to!), I decided it was time to seek outside help. The route I took was consumer protection and action was swift and satisfactory. I had my money refunded within two weeks after contacting them.

So, if you have a similar problem, get in touch with the Consumer Protection Agency (Chicago directory assistance can give you their address and phone number). They will be most helpful in getting your hard-earned dollar back.

I hope I've been helpful without being too vague and that Wayne will see fit to print this in *73*.

In closing, I'd like to say thanks for a fine magazine. The articles are interesting and informative, the format is great and the magazine is well worth the subscription cost.

Art Krugaluk WN1UUP
Wilmington MA

The letter by WA6EVX/KG6 in the April issue sounded much like my own unhappy dealings with Trigger Electronics. I spare you the details in order to propose several solutions which are all but guaranteed to work. 1. Write one more letter to Trigger. Review the essentials of your transactions specifying original order date, catalogue order number, if possible. Be specific about what you want, goods or refund, or refund only. Ask for the courtesy of a prompt reply. Enclose a copy of your cancelled check, front and back sides, or money order receipt. Put the material in an addressed envelope, but do not seal it! Go to the post office and talk with the postmaster about registered and certified mail, then tell him the whole

story. He will take it from there and you will hear from Trigger pronto. Two friends used this approach and got their merchandise quickly. Federal mail inspectors are bad news to mail order houses.

2. Write a second letter to the Assistant Attorney General, Chief of Consumer Fraud Section, 134 North LaSalle Street, Room 204, Chicago IL 60602. Briefly tell the story of your unsatisfactory dealings with Trigger. Include a copy of your check, and all previous correspondence. Give as complete a picture as possible. If you want help on how to tell your story, the number is 312-641-1988.

3. Send copies of this second letter to the following:

a. Mr. J. Thomas Rosch, Director, Bureau of Consumer Protection, Federal Trade Commission, Washington DC 20580.

b. Trigger's bank: Operations Officer, Oak Park Trust and Savings Bank, Lake, Marion, and Ontario Streets, PO Box 269, Oak Park IL 60301.

c. Better Business Bureau, 430 North Michigan Avenue, Chicago IL 60611.

d. Chamber of Commerce, 948 Lake Street, Oak Park IL 60611.

e. Legal Department, Trigger Electronics. Registered mail, restricted delivery, requires a signature which will be returned to you, providing you a name for a good stiff shot on the phone (their number is 312-771-8616).

It seems proven that appeals by individuals to the company are futile, but collective action by a number of people who have some muscle and punch behind them in the form of federal, state, and local agencies gets results. There is a growing tide of interest in consumer protection and we should both make use of and contribute to it.

David A. Fee WB0PTM
Brookings SD

KUDOS

By the way, thanks for having SD Sales as an advertiser. I'm sure you have heard many good things about them, but I would like to add my two cents worth. Their service is great, their prices outstanding, and the quality of their merchandise is hard to beat. I think this is one of the few companies, along with others like VHF Engineering, that *truly* has the amateur at heart.

Ed Picha WB9IMV/9
Urbana IL

After procrastinating for quite a while I had to write and tell you about the service that I recently got from S. D. Sales in Dallas, Tex.

I bought two clock kits complete with xformer and PC board. I put both kits together and found that they ran fast, and also one LED segment was defective in one of the kits. I wrote them about this and PROMPTLY received a reply from them. With the reply I got the necessary parts to correct the problem. What was unusual about this was, unlike some other kit mfrs, S. D. Sales included a schematic as to the placement of the parts, more condensers than were needed, and not just one replacement LED readout, but a complete set of SIX! That is what I call really going out of their way to insure customer satisfaction. By the way, both kits work beautifully.

Frank K. Burnham
Olympia WA

P.S. You've got a great magazine. Keep up the good work.

Let me add my kudos to Bill Godbout Electronics out in California. The clock kit I ordered from him arrived by airmail (cost him $2.75 – how does he make a profit on a $14.50 clock??) less than two weeks after I mailed in the order. He didn't even wait for the cheque to clear. *Now that's service!!*

Keep up the good work at *73* and let's have many more articles on computers.

D. E. Hausman VE3BUE
Waterloo ONT

YASME HISTORY

Our YASME DXpedition operation of 3D2KG is now history. The first QSO was with WA8JUN on 28 Jan 76 and the last QSO was with UA1OB on 23 Feb 76.

A total of some 7500 QSOs were made with amateurs in 113 countries, thus assuring that 3D2KG will eventually qualify for DXCC. Approximately one half of the QSOs were on CW and one half on SSB.

Operation on both phone and CW was held on 10, 15, 20, 40 and 80 meters. Openings into Europe were fantastically good and over 1000 QSOs were had with Europe. It was noted that there was a long path opening to Europe from 0630 to 0830 GMT, followed occasionally by a short path opening from 0900 to 1100 GMT.

Approximately 1000 QSOs were had during the first half of the ARRL Phone DX Competition, which was followed by another 1000 QSOs during the ARRL CW DX Competition. Good openings were had to all parts of the US and Canada on 10 meters during the CW and SSB ARRL contests, but almost no signals were heard on 10 meters during daily checks at other times. Similarly, lots of CW and SSB stations were worked on 80 meters during the contest weekends, but not many at other times.

All continents were worked (WAC) in 28 minutes, 20 Feb 76 on 14mc phone. Stations QSOd were: TU2GA, 0712; I0IJ, 0719; ZP5LX, 0726; JA7SGV, 0729; AH3FF, 0737; and W7TX, 0740 (time in GMT).

The station equipment, the Kenwood Twins and a Heathkit 230 amplifier, worked fine with no failures during a two month period with a grand total of nearly 20,000 QSOs from VR1Z, VR8B and 3D2KG.

It is expected that the next stop will be at Nauru. Please pass this information to all interested persons.

Lloyd Colvin W6KG
Iris Colvin W6DOD
Suva, Fiji Islands

FERMENTING CATALYST?

I remember several years ago when you and *73* were a great help to me back at White Sands (Missile) Proving Grounds and when I used to pick up a copy of *73* for 37¢ at the Yucca newsstand at Alamogordo, N.M. And now again I'm asking for a little assistance in communicating with any of *73*'s readers who might be in the Frankfurt-am-Main, Hanau or Weisbaden areas and are interested in minicomputers (and particularly those who may be planning to build around on 8080 miniprocessor, like I am).

Have just returned two days ago from a three week visit to the States and catching up on copies of *73*. What's this I read about Wayne getting out of BYTE? It won't have the same ole catalyst fermenting.

Will be looking forward in a year or so to be back in the USA and getting my General.

C. Norton Smith WN4FMB
APO New York

PLEASE RETURN

Please, if it is at all possible, return to the Table of Contents format that includes the name or call letters of the author. Many times it is easier to look up an article by referencing the call rather than the name of the article.

Bill Voight WB8YJE
Dayton OH

You're right. Done. – Ed.

KEEPING PACE

I read with interest the letter which you printed in your March issue concerning the cardiac pacemaker. Since I am deeply involved with same and have been for over 10 years, I am writing the following information to you:

Cardiac pacemaker, since its first implant over 12 years ago, has gone through quite a revolutionary change. Even up to and including seven years ago, demand type pacemakers could be shut off or reverted to a continuous mode via such imbalance as an electric shaver, ignition coil on a car, television receiver or a microwave oven. The new cardiac pacemakers made by Cordis or any other large manufacturing company are not susceptible to external stimuli.

Recent reports indicate that, because of failsafe circuitry, only by presence near a high power radar transmitter can a demand type pacemaker revert to a continuous mode. A microwave oven will also revert the pacemaker if the patient wearing the device is a midget and can somehow crawl inside.

A magnetic field in the proximity of a demand pacemaker merely alters the function to a continuous mode and does not hinder the patient from receiving the voltage stimuli.

I hope this will help Mr. Hudson and any of your other readers that may have such a device installed.

Joel H. Kornreich K2QBV
President, Cardiotronics, Inc.
Lyndhurst NJ

BICE-ENTENNIAL

Sometimes I disagree with you, but not often. At present you and *73* are tops. I can only see wasted paper in the new size magazine. Larger type and no real advantage of more material.

You may remember that I wrote to you personally because I wasn't getting BYTE. I heard from you that you weren't involved in the mag., so I wrote directly to them and threatened action through the Attorney General of New Hampshire. Well, that produced results immediately. I got the back issues and the current magazines and also a duplicate of the first 4 issues. I would say that they caught up on my subscription at last.

Incidentally, on *73*, I got the April issue yesterday (the 28th of February). Wow, that is really getting ahead of all other magazines.

Now, all I really want is real simple information in an article or somehow that will tell me what I want to know about computers and how they operate and of what use they are going to be to me and why I should build one and so on.

In the March issue I got some of the answers, so I hope you will continue to have articles that will enable poor dummy me to learn and see if I can use and even build a computer.

W7MEU – John Swafford, I believe, a phone co. man and hep on this stuff – is building a computer with the latest micro miniature stuff in it and plans to offer them for sale to the small business man or sell time on his to small business men. How about that?

I finally retired – so I say I am now unemployed. Hah! Don't you believe that, because I am busier than ever. Work that has piled up for years around here – dig this, plant that, paint this, lower this ceiling, make the bathroom modern, and I have enough work for a year steadily and what about ham radio – ugh, not any time except for my Army MARS net. I have a used motor home that needs much work before we can travel and I

won't move it till the work is done. So I bet we don't go anywhere this year. I want a 2m rig synthesized that will reach 148.01 and they just don't make that yet. I did buy a 2m Standard Walkie-Talkie SRC146A the other day – a distress sale. Complete with all the goodies except charger, nicads, carrying case, rubber ducky, crystals, unused, $250. So as soon as Standard gets the crystals here, I will use it for the interim. Oh, will I give some of the guys in parades a shock when I break their (net) parade communications frequency from my Circus Wagon as I traverse the parade route while playing my Calliope. I give a small WAC certificate for all who work me in parades. What? WAC certificate? – Sure, *Worked Al's Calliope*.

I'm removing the 94 simplex cuz it ain't used here. I'm adding another channel that is used more out here. 04-64.

Knowing you are busy, you don't have to answer this letter unless you want to, and I won't be mad. If I ever get over that way, I'll really have to stop by and see if you still have your Brooklyn accent. I'll expect a full VIP tour of your facilities.

I sure marvel at what has been accomplished with the FCC by the talks you and others have had with them in the last year. Keep up the good work.

Oh, yes, as you can see by my stationery I am the top man in the Knights of Pythias in this state for a year, until October. I tell everyone that this is my year, get it – BICE-entennial. I get laughs and groans, but it's fun to spring it on 'em.

I'm a fraternal man by nature, so belong to many – Odd Fellows, Masons, Knights of Pythias and all the side organizations of each group – ladies groups, also. Takes lots of work and evenings. Being a musician, I could play every night of the week because organists and pianists are hard to find for that kind of work, especially ones who actually play so that those doing floor work actually have something to "march to" while traversing the many patterns. Each to his own, I guess.

Keep up the good work with that *73 Magazine* and I hope you finally beat the IRS and the phone co.

Alden N. Bice K7JZT
Seattle WA

Good to hear from you Alden. Watch for better use of the bigger pages, at least in 73. Watch also for a lot more interesting things on microcomputers. Have always enjoyed your calliope QSL card. By all means plan on a visit when up this way . . . still have my Brooklyn accent when needed . . . very handy in New York – Wayne.

LET'S CHANGE

WB4SNC's comments (*Be My Guest*) touch on the subject of foreign fone stations running traffic in the so-called "American" fone band of 14.2-14.35 MHz.

The Managua and Guatemala disasters point up the very real need for Americans to have the right to work foreign voice stations in the 14.1-14.2 MHz portion of the 20 meter band.

Let's change those antiquated regulations to read:

> U.S. Amateur radio stations may utilize the 14.1-14.2 MHz segment of the 20 Meter Amateur band to conduct voice communications with other than U.S. Amateur stations. (NO communications between U.S. stations, except disaster emergency traffic, foreign or domestic.)

The new format, and your efforts to give us more for our money, are greatly appreciated. *73* – a very fine magazine!!!

Virgle H. Meador W4LVZ
Miami FL

PLUG IT IN WHERE?

Since my second hobby is raising sled dogs, I enjoyed the April cover. A question, though: Where do you plug the transceiver in? All in all, I'll bet this eliminates the ignition noise that you complained about a couple of issues ago.

Rich Racicot WA1TIQ
Merrimack NH

DEAR LEW

The American Radio Relay League
Lew McCoy
225 Main St.
Newington CT 06111

Dear Lew McCoy:

At the November meeting of the Michigan Area Repeater Council, your letter was read and discussed. After a lengthy discussion, and although strong FCC support is highly desirable, the MARC voted to go on record as being strongly opposed to the ARRL proposal for these reasons. The ARRL has already amply demonstrated its incapability of providing the national leadership in this frequency coordinating and other fields. These include such failures as the present mess on 450 MHz amateur band planning; failure to promote acceptance of the ARRL 6 meter band plan; the lack of technical and political leadership in providing state of the art information, commercial standards, and political considerations; the failure to have established a national 15 kHz splits policy; failing to promote cooperation between the present repeater councils and such groups as RACES and others. There has been a general failure to promote good operating procedures on VHF. The amateur world has a proud history of self-policing on HF. On HF the ARRL OO program has helped many amateurs. However, this program apparently was never extended to VHF, where it is needed desperately. The ARRL has continually looked down on the Technician class amateur as a fourth rate ham. The only positions available to the Technician in the ARRL organization are almost not worth mentioning. Many Technicians, however, are more technically capable than many higher class amateur licensees. The ARRL should be encouraging manufacturers to upgrade built-for-amateur-use equipment and discouraging such practices as including "94" simplex crystals in VHF FM equipment. The only formal meeting between the FCC and amateur radio operators in the history of the FCC and the ARRL was not even attended by the ARRL. The ARRL should be involved with helping establish national policies and working with local repeater councils. It must be remembered that the ARRL does not represent all us amateur radio operators, and that some amateurs will have nothing to do with the ARRL. The MARC will not be subservient to the ARRL communications department.

We would like this letter published in *QST*.

Terry Babenko K8RUR
Chairman
Lloyd Ellsworth AA8ZCO
Secretary-Treasurer
Michigan Area Repeater Council
Belleville MI

BEST SYSTEM

Thanks a lot for the 14 wpm tape. Two 20 minute sessions/day for about two weeks got me over the hump. Passed Advanced exam yesterday. ARRL led me astray and cost months of lost time.

I.W.C. Hamlin WN3ZLM
Havre de Grace MD

Just a note to let you know I really enjoy your mag. Also think you have the best system for learning the code. Passed my General on 1/13/76 – haven't seen the ticket, yet. Wonder what the holdup is?

Glenn Waldrum WN5NQW
Sherman TX

P.S. Would like to see more articles from John Murray W1BNN!

FIRST TO MAKE SENSE

Just finished reading the January issue, and in comes the February issue. When am I supposed to find time to read my other magazines? I'm not complaining, just saying wow what an issue. All of the articles were great, but I have to comment on one in particular. That one is "What's All the Noise?" by Mr. Roukas W2DNY.

Now, I've read a lot of articles on noise figure, and this is the first one that made any sense to me. (I have a 1st class FCC license and am not exactly a dumbbell on electronics.) This is the first time I have ever seen anyone write that noise figure was a ratio or measure of the amount of noise a receiver adds to the signal passing through it. Now I have to go back and read all those other articles with this new insight. They all probably said it, but not clearly.

Roger C. Galbraith WA3TCO
Guys Mills PA

A COUPLE OF SUGGESTIONS

I would like to sincerely thank Mr. John Harrington for his most inspiring article in the February, 1976 issue of *73*: "You Can Make Photo PC Boards." This article aroused a long-dormant interest in photography, and helped me make some outstanding (if I do say so myself) PC boards for a local repeater system.

A couple of suggestions might be in order for those who cannot find Naccolith film, as used in the article. I used Kodalith Ortho Film, Type 3, and Kodalith Developers (a two-part solution), quite successfully. This film seems to be quite a bit more easily available than the film called for in the article . . . at least in this part of the country. Naturally, exposure times must be compensated for with this type of film. I have found that an extremely short exposure (½ second) to a No. 2 photoflood is adequate with Kodalith, or, a three second exposure to average room light seems to work just as well. A couple of test runs will quickly determine what works best.

Also, I find that making a paper proof of the negative works beautifully for keeping mistakes off of expensive board stock. I make a paper contact print of the negative using "Velox" film and Dektol developer. The paper proof makes it possible to see any potential problems on the negative . . . any lines that are not crisp and clear, any overexposure of the negative, and any excessive problems with dirt showing up as clear spots on the negative. I use this proof, if all the lines are clear and good, to draw in all the components with a red pen, showing all component leads and clearances, and drawing in all components and jumpers. This stops any problems with one too few component pads, improper component clearances, and wiring errors. Also, this proof makes the final wiring of the completed board much easier.

And, for thoroughly professional-looking boards, Pres-Type or any type of instant press-on lettering can be used to personalize your board. Component points and board terminals can be identified easily using this kind of type, because it will photograph and be etched just like the lines on the

Continued on page 113

CONTESTS

Editor:
Robert Baker WA1SCX
34 White Pine Drive
Littleton MA 01460

FOUNDATION TO AWARD SCHOLARSHIPS

The Foundation for Amateur Radio, Inc., a non-profit organization with its headquarters in Washington, D.C., announces its intent to award three scholarships for the academic year 1976-77. All amateurs, wherever resident in the U.S. and holding an FCC license of at least General class, can compete for one or more of the awards if they plan a full-time course of studies beyond high school.

The John W. Gore Scholarship pays $750. Applicants must intend to pursue a career in electronics or a related science and have completed at least one year in an accredited college or university toward a baccalaureate or higher degree. Preference will be given to residents of the District of Columbia, Maryland, and Northern Virginia.

The Richard G. Chichester Scholarship also pays $750. Applicants must be members of the ARRL and be sponsored by an ARRL-affiliated club. There is no restriction on the course of study, but applicants must be enrolled in or have been accepted by an accredited university or college and intend to seek a baccalaureate degree. Preference will be given to residents of Ohio, Kentucky, Indiana, Illinois, the District of Columbia, Maryland, and Northern Virginia.

The Edwin S. Van Deusen Scholarship pays $250. Applicants must have been accepted or enrolled in an accredited 2 year technical school and intend to seek an Associate degree in a science-related area. Area preference is the same as the Gore Scholarship.

Application forms can be requested from the Chairman, Scholarship Committee, 8101 Hampden Lane, Bethesda, Maryland 20014. Requests must be postmarked prior to June 1, 1976.

The Foundation is devoted exclusively to promoting the interest of amateur radio and to scientific, literary and educational pursuits that advance the purposes of amateur radio.

CALENDAR

May 14 - 16*	YL ISSBers QSO Party
May 15*	World Telecommunications Day – Phone
May 15 - 16	Armed Forces Day Communications Tests
May 15 - 17*	Michigan QSO Party
May 22*	World Telecommunications Day – CW
May 22 - 23	New York State QSO Party
May 22 - 23*	Wisconsin State QSO Party
May 23 - 24	Nostalgia Radio Exchange
June 4 - 7	IARS/CHC/FHC/HTH QSO Party
June 5 - 6	Minnesota QSO Party
June 12 - 13	RSGB National Field Day
June 12 - 14	West Virginia QSO Party
June 12 - 14	ARRL VHF QSO Party
June 26 - 27	ARRL Field Day
July 3	Straight Key Night
July 3 - 4	QRP Summer Contest
July 17 - 19	CW County Hunters Contest
July 24 - 25	ARRL Bicentennial Celebration
Aug 7 - 8	10-10 Net Summer QSO Party
Aug 14 - 15	European DX Contest – CW
Aug 21 - 22	SARTG Worldwide RTTY Contest
Aug 21 - 23	New Jersey QSO Party
Sept 4 - 5	ARRL VHF QSO Party
Sept 11 - 12	European DX Contest – Phone
Sept 25 - 27	Delta QSO Party
Oct 8 - 10	CD Party – Phone
Oct 9 - 10	RSGB 21-28 MHz Contest – Phone
Oct 16 - 17	RSGB 7 MHz Contest – CW
Oct 16 - 18	CD Party – CW
Oct 30 - 31	CQ Worldwide DX Contest – Phone
Nov 5 - 8	IARS/CHC/FHC/HTH QSO Party
Nov 6 - 7	RSGB 7 MHz Contest – SSB
Nov 6 - 8	ARRL Sweepstakes – CW
Nov 13 - 14	European DX Contest – RTTY
Nov 14	OK DX Contest
Nov 20 - 22	ARRL Sweepstakes – Phone
Nov 27 - 28	CQ Worldwide DX Contest – CW
Dec 4 - 5	ARRL 160 Meter Contest
Dec 11 - 12	ARRL 10 Meter Contest
Dec 31	Straight Key Night

* = described in last issue

SOWP BICENTENNIAL CW QSO PARTY

The first weekend in June 1976 has been set aside by the Society of Wireless Pioneers (SOWP) for their Bicentennial CW QSO Party. The activity will start at 1200 hours GMT on Saturday June 5th and end at 2400 hours GMT on Sunday, June 6th. Suggested frequencies for the event are 55 kHz up from the low end of each band. Members with Novice licenses should use the mid-frequency of each Novice band. The call will be CQ-SOWP.

Stations will exchange signal report, QTH (city and state) and SOWP membership numbers. A special certificate will be awarded to all member stations who contact 10 or more fellow members. Stations desiring a certificate should submit a list of contacts made – showing callsign and SOWP membership number of the station worked. Submissions should be made not later than June 15, 1976 and should be mailed to: Bill Willmot K4JPF, V.P.-P.R., 1630 Venus Street, Merritt Island FL 32952.

BITING BUG AWARD

A plaque and $50 prize are being offered to the writer of the best article about ham radio published in an American non-ham radio publication during 1976. Articles will be judged on how well they attract non-hams to ham radio, based on subject matter, style, accuracy, illustrations, and mention of where a reader may obtain more information about ham radio. The type of publication and circulation will also be considered, with youth magazines being judged higher.

All entries must be submitted by January 31, 1977 to: Ray Collins WA2GBC, Harter Road, Morristown NJ 07960. Send a photostat of the article along with the name and date of the publication.

SPESM BICENTENNIAL CERTIFICATE

The Society for the Preservation and Encouragement of Six Meters is offering a Bicentennial Certificate for working any 5 members between January 1, 1976 and December 31, 1976 on 50 to 54 MHz any mode. Send date, time, call letters, and SPESM Membership Number along with a check or money order payable to Dan Atwell, for $1.25 to cover printing and postage costs. Send application to: The SPESM Club, Bicentennial Committee, P.O. Box 768, South Elgin IL 60177.

WORKED RAAG MEMBERS AWARD

The award is issued by the Radio Amateur Association of Greece for contacting members after January 1973 as follows: Class 3 – DX stations work 15 SV RAAG members, EU stations work 50 SV RAAG members; Class 2 – DX stations work 30 SV RAAG members, EU stations work 75 SV RAAG members; Class 1 – DX stations work 50 SV RAAG members, EU stations work 100 SV RAAG members.

ATHENS CITY AWARD

This award is given for contacting stations resident in the city of Athens, GREECE after January 1973 as follows: Class 3 – DX stations work 10 SV stations in Athens, EU stations work 20 SV stations in Athens; Class 2 – DX stations work 20 SV stations in Athens, EU stations work 30 SV stations in Athens; Class 1 – DX stations work 30 SV stations in Athens, EU stations work 50 SV stations in Athens.

For either award: No restrictions on band or mode and club station SV1SV counts as 3 for DX or 5 for EU in all classes. QSLs are not required to be sent. Send application showing log copy certified by two other hams or a club official and 12 IRCs or $2 to award manager, SV1IG, Anastasios Panos, P.O. Box 564, Athens, GREECE.

CAIRNS CENTENARY AWARD

All stations outside of the Cairns, Australia area are eligible for the award (outside 100 mile radius of Cairns). VK and ZL stations must QSO with 3 Cairns area stations while overseas stations need only QSO with 2 Cairns area stations. Send a copy of log details to CARC, VK4HM, P.O. Box 1426, Cairns, 4870 QLD AUSTRALIA.

Awards will be forwarded in bulk via bureaus unless the cost of postage and packing is remitted. The award will be available for the entire 1976 year. The following list shows the Cairns area stations – VK4s: TL, MH, SU, ZCS, YG, AMO, NF, ZBU, AE, NU, ZY, ZNZ, RY, HK, YT, ZIP, HM, VI, CI, ZIB, KV, VT, OX, NI, DJ, DB.

27th ANNUAL ARMED FORCES DAY COMMUNICATIONS TESTS

Starts: 1300 GMT Saturday, May 15
Ends: 0245 GMT Monday, May 16

This year's observance of Armed

Forces Day marks the 27th anniversary of an annual event reflecting the long-standing good relations between the amateur radio fraternity and our military radio stations. These tests give amateur operators their yearly opportunity to demonstrate superior technical skills and receive proper recognition for their proven expertise. The proceedings include crossband operations in CW, SSB, and RTTY receiving tests. Special commemorative QSLs will be awarded to amateurs achieving a verified 2-way contact with any of the participating military stations. Special certificates also will be sent to amateurs who receive and accurately copy the Armed Forces Day message from the Secretary of Defense, as transmitted in both CW and RTTY during the receiving tests.

The military stations WAR, NAM, NPG, and AIR will transmit on military frequencies and listen for amateurs transmitting in those portions of the amateur bands indicated on page 130. The operators at the military stations will specify that portion of the amateur sub-band they are tuning.

CW RECEIVING TEST:

Receiving test will be conducted at 25 wpm, broadcast will be a special Armed Forces Day message from the Secretary of Defense to all participants. A ten minute CQ call for tuning purposes will begin at 0300 GMT May 16th. The message will be transmitted precisely at 0310 GMT from the following stations:

WAR – 4030, 6997.5, 14405; NAM – 4012.5, 7385, 14386; NPG – 4005, 6989, 14375, 49.995 MHz and 143.995 MHz; AIR – 7315, 13997.5.

RTTY RECEIVING TEST:

The RTTY test will be transmitted at 60 wpm. A ten minute CQ call for tuning will begin at 0335 GMT May 16th with the message beginning at 0345 GMT. Transmission will be from the following stations:

WAR – 4030, 6997.5, 14405; NAM – 4012.5, 7385, 14385; NPG – 4010, 7347.5, 13922.5, 148.410 MHz; AIR – 7315, 13997.5.

SUBMISSION OF TEST ENTRIES:

Transcripts should be submitted "as received" with no attempt to correct possible transmission errors. Indicate on the page containing the test: time, frequency, callsign of station copied, your name, call (if any), and address. Entries should be postmarked no later than 25 May 1976 and submitted to the respective service copied.

Stations copying NAM and NPG should send entries to: Armed Forces Day Test, Chief, Navy-Marine Corps MARS, Building 17, 8th Street & South Courthouse Road, Arlington VA 22204.

Stations copying WAR should send entries to: Armed Forces Day Test, Commander, United States Army, Communications Command, ATTN: CC-OPS-OM, Fort Huachuca AZ 85613.

Stations copying AIR should send entries to: Armed Forces Day Test, Air Force Communications, Service/DOYF, Richard Gebaur Air Force Base MO 64030.

NEW YORK STATE QSO PARTY

Contest Periods:
1600 GMT May 22 to
0400 GMT May 23
1200 to 2359 GMT
May 23

Stations may be contacted once on each mode (phone and CW) on each band. NY stations may work other NY stations. Mobiles and portables changing county may be reworked by out of state stations.

EXCHANGE:

RS(T), serial number starting at 001, and QTH – county for NY stations; state, province, or country for others.

FREQUENCIES:

CW – 1810, 3560, 7060, 14060, 21060, 28060. Phone – 3975, 7275, 14285, 21375, 28575. Novice – 3725, 7125, 21125, 28125.

SCORING:

Score one point per QSO. NY stations multiply QSO points by the total number of states, provinces, and countries. Non-NY stations, multiply QSO points times number of different NY counties worked (62 max).

ENTRIES:

Number the first contact for each new multiplier in logs. A check sheet is requested from stations working over 100 contacts. Entries should be sent no later than June 30 to: John C. Yodis WA2EAH, 43 Beacon Avenue, Albany NY 12203. Results will be sent only to those enclosing a large SASE. Appropriate certificates will be issued.

SPRING NOSTALGIA RADIO EXCHANGE

Starts: 1800 GMT Sunday,
May 23
Ends: 0100 GMT Monday,
May 24

Sponsored by the Southeast Amateur Radio Club K8EMY of Cleveland, Ohio, the contest is open to all amateurs. The object is to restore, operate, and enjoy older equipment with like-minded hams. A Nostalgia Radio is any equipment built since 1945 but at least 10 years old – an advantage, but not required in the exchange. The same station may be worked on each mode on each band, but no AM phone below 21 MHz. General call on CW is "CQ NX," on phone "CQ EXCHANGE." Noncontestants may also be worked.

FREQUENCIES:

CW – 70 kHz up from low band edges. Phone – 3910, 7280, 14280, 21380, 28580. Novice – 3720, 7120, 21120, 28120.

EXCHANGE:

Name, RS(T), state-province-country, transmitter type (home brew send P.A. tube, i.e., "807"), and other interesting pleasantries.

SCORING:

Add the numbers of different transmitters, states-provinces-countries for each band. Multiply by the total number of QSOs; non-contestants' QSOs count one, NX QSOs count three. Multiply that total by Nostalgia Multiplier: total years old of your transmitter and receiver (if transceiver, multiply years old by 2). Different equipment combinations may be used; in that case figure scores separately for each and combine for total score.

AWARDS:

Certificates are not awarded for highest scores, rather for unusual and ingenious experiences, circumstances, achievements, etc.

ENTRIES:

Send logs, comments, pictures, anecdotes, etc., to W8KAJ, 2386 Queenston Road, Cleveland Heights OH 44118.

NOTE: There was a small response to the first Exchange last December, so the Exchanges will be held on a three times a year basis. Why not try this "FUN" contest and make some new friends!

IARS/CHC/FHC/HTH QSO PARTY

Starts: 2300 GMT Friday,
June 4
Ends: 0000 GMT Monday,
June 7

An SASE to K6BX will bring detailed information. Contest is open to all amateurs and SWLs worldwide. Same station may be worked on each band and mode, SSB and AM are different modes.

EXCHANGE:

QSO number, RS(T), name, CHC/FHC number, US state and county or similar division. Nonmembers send HTH instead of CHC/FHC number.

SCORING:

CHCers – score 1 point per QSO with other CHCers, 2 points per QSO with HTHers; 1 additional point if YL, B/P, FHC, Novice, CHC-200, Merit or Club station, or if on VHF/UHF; double above points if QSO is outside own country.

HTHers – contacts with other HTHers count 1 point, with CHCers count 3 points. Rest same as above.

SWLs – use above depending on whether CHC member or not.

MULTIPLIERS:

Each different continent, country, ITU zone, and US state counted only once.

FINAL SCORE:

Multiplier times total QSO points is final score. Multi-operator stations divide score by number of operators.

FREQUENCIES: (for US and DX as allowed)

CW – 3575, 3710, 7070, 7125, 14075, 21075, 21090, 21140, 28090, 28125.

Phone: 3770, 3775, 3790, 3943, 3960, 7070, 7090, 7210, 7260, 7275, 14320, 14340, 21360, 21440, 28620.

AWARDS:

Hundreds of certificates and trophies in all categories and divisions are awarded. An SASE will bring further information from K6BX. Send all requests and logs to: International Amateur Radio Society, K6BX, P.O. Box 385, Bonita CA 92002. Logs should be mailed within 15 days after the close of the QSO Party.

MINNESOTA QSO PARTY

Starts: 0001 GMT, Saturday
June 5
Ends: 0500 GMT, Sunday
June 6

Sponsored by the Heartland Amateur Radio Club with a possible special events call station (call unknown at this time). No restrictions as to mode or operating time; use 160 to

Continued on page 130

RESULTS

RESULTS OF 5th ANNUAL SARTG WORLDWIDE RTTY CONTEST

Single Operator, top ten world scores:

Class A, up to 100 Watts		Class B, over 100 Watts	
I6VGA	133,955	I1PYS	229,320
F6ALL	85,760	CT1EQ	204,590
PAØORZ	49,060	I1AA	204,000
WØYDJ/4	36,960	OD5HC	167,750
LA7AJ	23,230	HB9AVK	147,600
G3RDG	19,080	ON5WG	121,980
SL5AR	16,975	W3EKT	114,725
LA2IJ	13,230	WA3JTC/ZP	113,425
OK2BJT	9,240	4X4MR	107,250
OK1MP	7,705	SMØOS	96,815

Special classes – top five scores:

Class C, multi-operator		Class D, SWLs	
DLØTD	239,370	Wolfgang Geller	154,000
HA5BKM	98,890	I3-13018	100,160
OZ7RD	44,800	I3-14258	93,130
OK1KSL	41,065	I4-14707	58,575
HAØKDA	22,880	JA1-3477	1,750

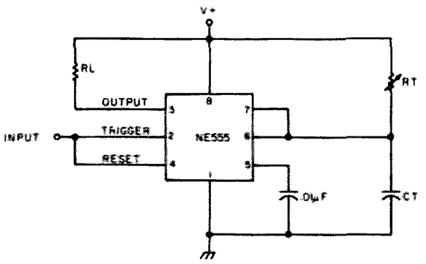

Fig. 1. Basic timer circuit. The time delay is determined by the component values of R_t and C_t and may be calculated from the equation: $t(sec.) = 1.1\ R_t\ (Ohms) \times C_t\ (farads)$. The timing diagram for this circuit is shown in Fig. 2.

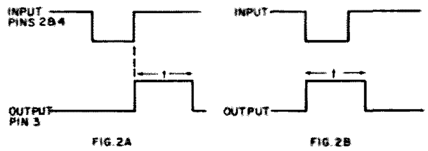

Fig. 2. Fig. 2(a) shows the timing diagram for the basic timer circuit of Fig. 1. Fig. 2(b) shows the timing diagram that would result if the reset terminal were tied to V+ rather than to the input terminal.

Super COR

--digital ... of course!

Mike Connor WA0BMP
3611 North Shore Dr.
Clear Lake IA 50428

and

Bob Henson WB0JHS
105 Northview Dr.
Waukee IA 50263

One of the auxiliary circuits essential to the operation of a repeater is a COR, or carrier operated relay. To date, a number of COR circuits have been designed, utilizing a variety of active devices (tubes, transistors, op amps, UJTs, etc.) to provide a number of auxiliary repeater control functions. However, few of the previously presented designs have been truly complete. Some designs presented timing circuits and auxiliary repeater control circuits but avoided the rather sticky task of interfacing the logic circuits with the high impedance circuitry of the still popular commercial tube-type FM receiver. Other designs detailed elaborate circuitry for impedance matching to the receiver, but ignored the auxiliary circuits necessary for the convenient, practical operation of a repeater. Still other designs employed timers and auxiliary circuits of dubious stability.

The digital COR described in this article employs state of the art solid state devices, allowing simple and compact construction, as well as providing stable, reliable and convenient repeater operation. The input circuit is specifically designed to interface with commercial tube-type FM receivers.

The versatility of the digital COR is best described by detailing the functions it was designed to perform:

1) The most basic function of keying the repeater transmitter upon detection of a carrier on the repeater input frequency.

2) A squelch tail timer – this timer provides a delay between the time the reception of carrier ceases and the time the repeater transmitter drops out, a necessary feature for consistent copy of mobile stations in fringe areas.

3) A three minute timer that will "lock out" the repeater transmitter should there be a continuous carrier of longer than a three minute duration detected by the repeater receiver.

4) A means of resetting the three minute timer without letting the repeater transmitter drop out. Many of the previously designed CORs have provided for resetting of the three minute timer only upon dropout of the transmitter, necessitating an annoying squelch tail burst at the end of each transmission, and causing unnecessary wear and tear on the COR relay. In addition to providing a means for resetting the three minute timer a fraction of the way through the squelch tail time delay period, the digital COR also provides a means for an audible indication when this has been accomplished. A DPDT center-off switch has also been included with which two other modes of resetting the three minute timer may be selected.

5) A means of keying or disabling the repeater transmitter via a remote contact or digital logic signal applied to the COR. This feature has been included to make the COR compatible with remote control devices, monitor receivers, code and voice identifiers, etc.

Circuit Building Blocks

One of the basic building blocks of the digital COR is the NE555 timer IC. Since this IC has been described in numerous articles in past issues, only the most salient characteristics will be repeated here. The reader who desires additional information is urged to consult the references listed at the end of the article.

Fig. 1 shows the external component connections of

the basic timing circuit. The timing diagram for this connection is shown in Fig. 2(a). With the reset terminal connected to the trigger terminal, the timing cycle is initiated on the trailing edge of the input pulse. The output, pin 3, remains at a logic "1" voltage during the timing cycle, the duration of which is determined by the values of R_t and C_t.

As depicted in the timing diagram of Fig. 2(b), the timing cycle would begin on the leading edge of the input pulse if the reset terminal were connected to V+ rather than to the trigger terminal.

Fig. 3 shows how an NPN transistor can be added to the basic circuit to provide an auxiliary reset feature. A positive voltage applied to the auxiliary reset input will cause C_t to remain discharged, and prevents completion of the timing cycle.

The timing diagram for this circuit is shown in Fig. 4. Note that the output switches to a logic "1" voltage at time (1), the trailing edge of the input pulse. However, the timing cycle does not actually commence until the auxiliary reset input returns to a logic "0" at time (2). The output then returns to a logic "0" t seconds later as determined by the values of C_t and R_t.

The other IC employed in the digital COR circuitry is the SN7400 quad NAND gate. For those not familiar with logic circuitry, Fig. 5(a) shows the commonly used symbol for the two input NAND gate. Fig. 5(b) shows the truth table that governs its logic output.

One final circuit building block is necessary to build the digital COR. This is the circuitry that provides a digital "on" or "off" signal to the logic circuits depending on the presence or absence of a carrier on the repeater input frequency. This is accomplished by the circuit shown in Fig. 6.

Q1, an N-channel JFET, provides impedance matching between the high impedance of the receiver and the considerably lower impedance of the logic and timer circuits of the COR. Q2 and Q3 comprise the analog to digital portion of the circuit, providing either a logic "1" or "0" voltage at the collector of Q3 depending upon the magnitude of the analog signal at the drain of Q1.

A negative going voltage in the receiver during reception of carrier will cause a corresponding increase in the drain voltage of Q1. The magnitude of the drain voltage sufficient to cause the collector of Q3 to switch from a logic "1" to a logic "0" is determined by the setting of the 5k Ohm trimmer.

Note that the collector and emitter of Q2 are reversed from the conventional biasing arrangement in order to provide a sharper switching characteristic.

Composite Circuit Description

We can now proceed with how the building blocks just described can be utilized in the design of the digital COR. Fig. 7 shows the simplified logic diagram of the composite circuit. For the sake of clarity, some timing components, bypass and coupling capacitors, and input circuitry have been omitted from this diagram. The timing diagram for a typical transmission cycle is depicted in Fig. 8.

Referring to Figs. 7 and 8, the receiver detects a carrier

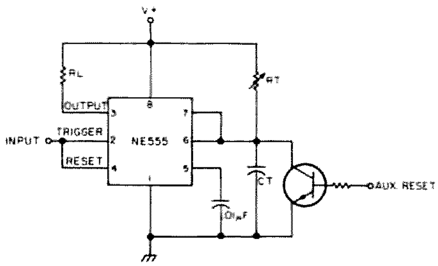

Fig. 3. The addition of an NPN transistor and resistor provides an auxiliary reset feature. The timing diagram for this circuit is shown in Fig. 4.

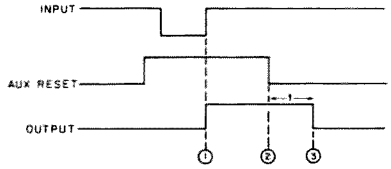

Fig. 4. Timing diagram for Fig. 3.

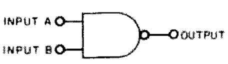

FIG 5A

INPUT A	INPUT B	OUTPUT
0	0	1
0	1	1
1	0	1
1	1	0

FIG 5B

Fig. 5. Fig. 5(a) shows the common logic symbol for a two input NAND gate. Fig. 5(b) shows the truth table for the two input NAND gate.

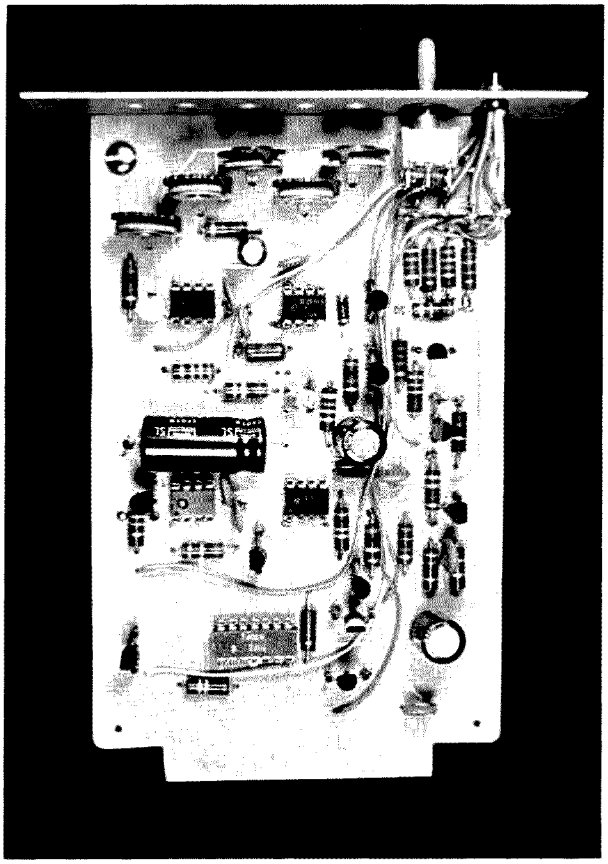

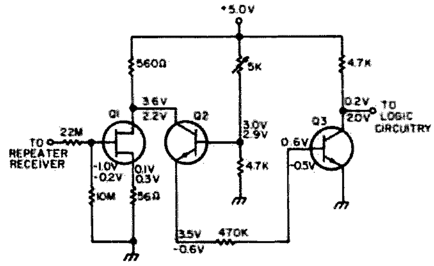

Fig. 6. Input matching and analog to digital portion of the digital COR. Top voltages are voltages during carrier reception conditions. The bottom voltages are taken during quiescent conditions. All voltage measurements are taken with a high impedance voltmeter.

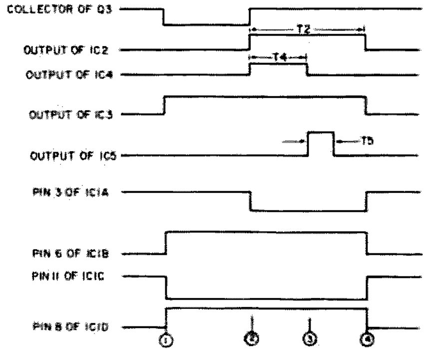

Fig. 8. Timing diagram for a typical transmission cycle, using the logic circuit shown in Fig. 7.

on the input frequency at time (1), driving the collector of Q3 to a logic "0" voltage. Remembering the truth table for a NAND gate shown in Fig. 5(b), the "0" on pin 5 of IC1B drives pin 6 of IC1B to a logic "1." This removes the "0" from the reset terminal of the three minute timer, IC3, allowing its output to go to logic "1," and initiating its timing cycle. With both pins 12 and 13 of IC1C at logic "1," pin 11 is driven to a logic "0." Section IC1D of the quad NAND gate simply inverts the output of section IC1C, providing a positive keying voltage to the transmitter keying relay or keying circuit.

At time (2) the carrier ceases, allowing the collector of Q3 to return to a logic "1" voltage. This removes the "0" from the reset terminals of both IC2 and IC4, allowing their timing cycles to commence. The outputs of both IC2 and IC4 are driven to the logic "1" state during their timing cycle. IC1A inverts the output of IC2, providing a logic "0" at pin 4 of IC1B. Thus pin 6 remains at a logic "1" and the transmitter remains keyed.

At time (3) timer IC4 times out and its output switches to a logic "0," keying timer IC5. The output of IC5 is a brief positive pulse of sufficient duration to discharge the timing capacitor of the three minute timer, IC3, reinitializing its timing cycle. The output of IC5 can also be used to provide a tone burst for audible indication that the three minute timer has been reset.

At this point in the transmission cycle the QSO could continue, the intervals between each of the subsequent transmissions needing only to be t_4 seconds long (as determined by the timing components of IC4) in order to be assured that the three minute timer is being reset. The transmitter need never drop out during this time.

At time (4) the squelch tail timer, IC2, completes its timing cycle and its output returns to a logic "0." Pin 3 of IC1A is driven to a logic "1." The resulting "0" at pin 6 of IC1B forces pin 11 of IC1C to a logic "1." IC1D inverts this input and the transmitter drops out.

Note that if a carrier is present continuously for any length of time greater than three minutes, or if during a QSO of longer than three minutes there is no interval of t_4 seconds or greater between adjacent transmissions, the three minute timer will time out. Pin 12 of IC1C would be driven to logic "0." Pin 11 would then go to a logic "1," and the transmitter would drop out.

D1 and D2 provide the remote keying and shutoff functions respectively. The COR will respond the same to a logic "0" remote keying signal on the cathode of D1 as it does to a local keying signal present on the collector of Q3. A "0" applied to the cathode of D2 will prevent the transmitter from being keyed, regardless of the status of the timer outputs or the local or remote keying voltages.

The actual schematic is presented in Fig. 9. Three light emitting diodes have been included for visual indication of circuit operation. The green LED indicates that a carrier or remote keying signal is being received. The red LED indicates that the transmitter

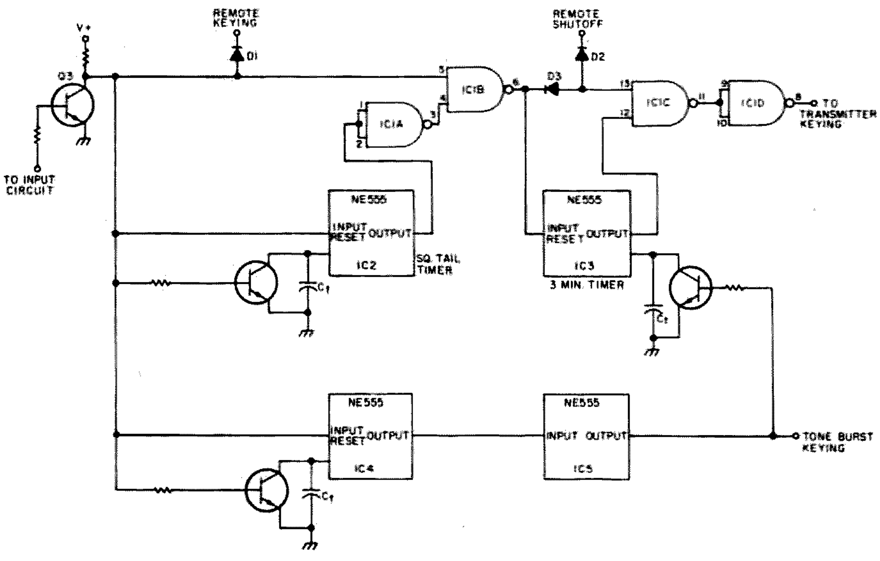

Fig. 7. A simplified composite logic diagram of the digital COR.

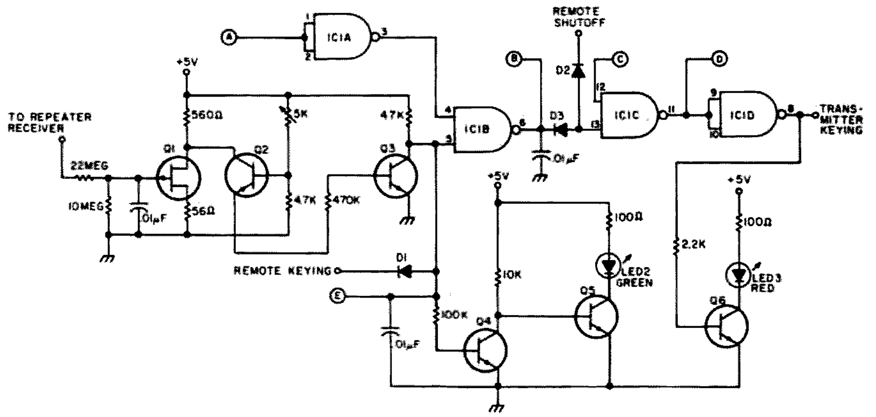

Fig. 9(a). Input and gating circuit for the digital COR. Encircled letters refer to connections to the time delay circuit of Fig. 9(b).

is being keyed, and the yellow LED will flash for the brief intervals when IC5 applies a reset pulse to the timing capacitor of the three minute timer, IC3.

The mode of COR operation may be selected by the position of SW1, a DPDT, center-off, switch. In the center-off position, the three minute timer will not reset until the transmitter drops out. In position 1 (the position of the switch in Fig. 9(b)), the three minute timer will reset the instant that the repeater receiver detects the absence of a carrier signal. In position 3, the three minute timer will be reset by a pulse from IC5, as described in the previous discussion of circuit operation.

Construction

The circuit board patterns for the digital COR are shown in Figs. 10 and 11. Due to the number of components in the circuit, a double sided circuit board was deemed a necessity to avoid the proliferation of wire jumpers that would have been required with a single sided board. The circuit board is designed to fit into a standard 15-pin PC board edge connector, though this could easily be modified for different connector arrangements.

Construction should be straightforward if the components are mounted as shown in Fig. 11. Bearing in mind that the circuit board is double sided, the components that must be soldered to both sides of the board should be mounted first. The remainder of the components can be mounted in any order.

There are no substitutes for the five ICs listed in the parts list. Fortunately, they are inexpensive, costing approximately five dollars for the lot.

The experienced builder is, however, encouraged to substitute bargain priced transistors for the HEP transistors listed in the parts list. Though the HEP devices will work with absolutely no problem, a substantial savings can be realized with a trial and error substitution of less expensive semiconductors.

The COR board should be mounted in a shielded enclosure. The connection of the repeater receiver to the input of the COR should be made with a shielded cable, since any rf or electrical noise introduced into the input circuit will result in erratic circuit operation. All other external wiring to the COR should be as short as possible, adequately bypassed at both ends, and shielded if the length is appreciable.

Checkout and Calibration

The calibration procedure is not at all difficult. A well regulated five volt power supply, a voltmeter, and a watch or clock with a second hand are essential. A calibrated signal generator would be convenient for the final adjustment but is not absolutely necessary.

First connect the power supply to the appropriate terminals as indicated in Fig. 11. The reception of carrier may be simulated by grounding the remote keying input with a jumper. With the aid of the watch or clock and the LED indicators, it is then possible to set the timing intervals of the four IC timers.

The final adjustment is that of the 5k Ohm trimmer in the input circuit. First, find a point in the receiver squelch circuit that switches from a slightly negative voltage during quiescent conditions to an even more negative voltage during the reception of carrier. In almost all of the tube-type

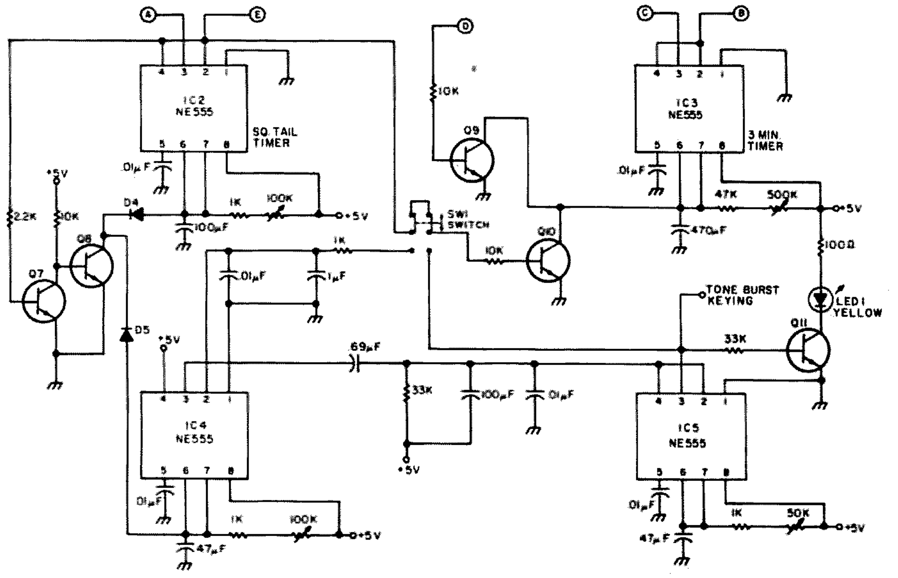

Fig. 9(b). Timing circuit for the digital COR. Encircled letters refer to connections to the input and gating circuit of Fig. 9(a).

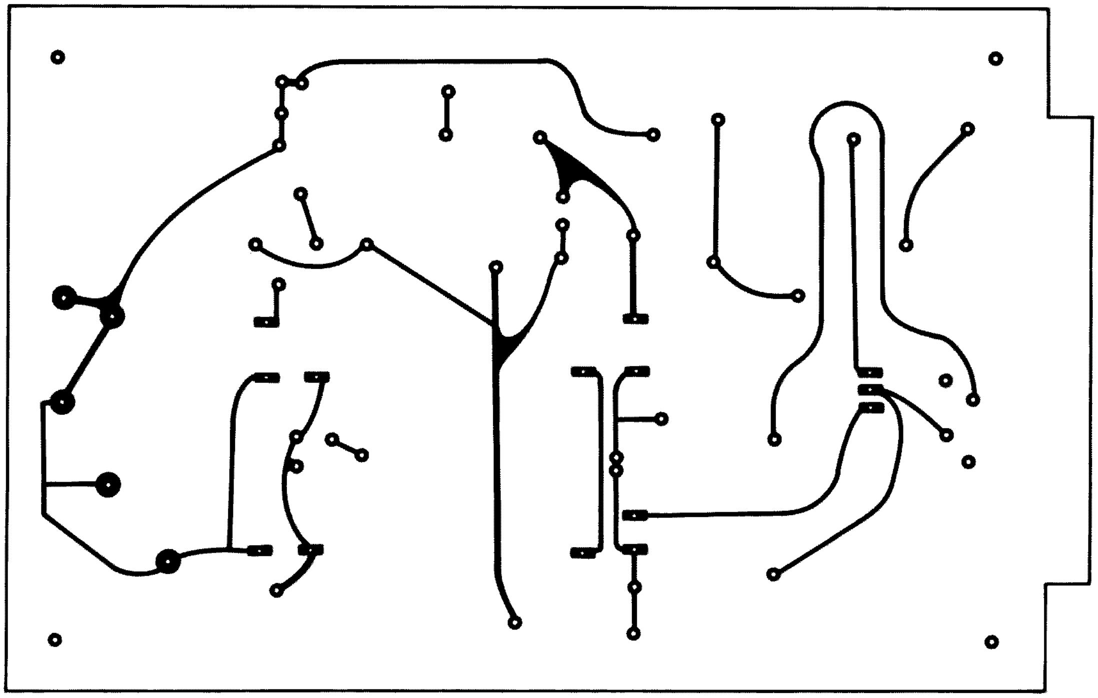

Fig. 10. Component side of PC board. The holes in the four corners should be used for pattern alignment during PC board etching.

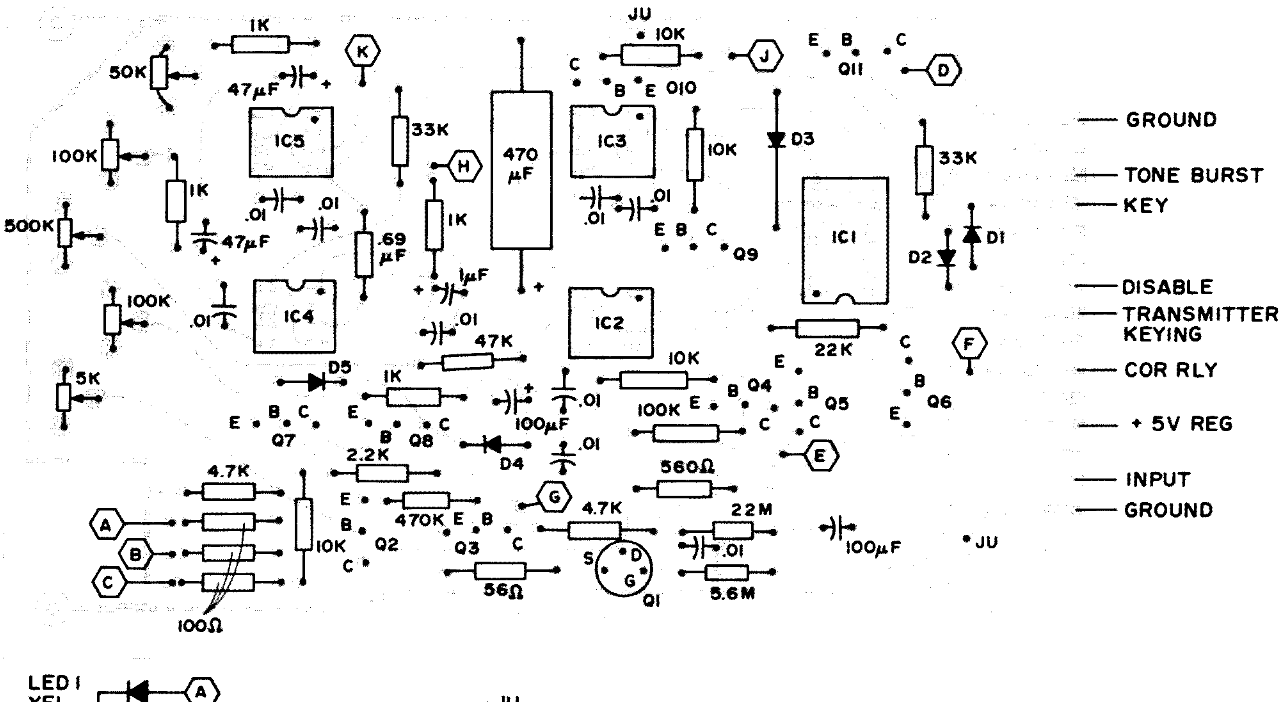

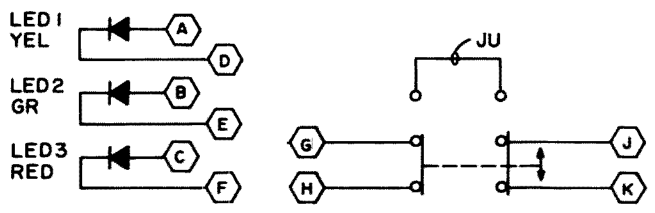

Fig. 11. Mounting diagram for the digital COR components. Note that this is a bottom view of the PC board. A wire pin must be soldered to both sides of the PC board at points marked "JU." External connections to the LED indicators and the switch SW1 are also shown.

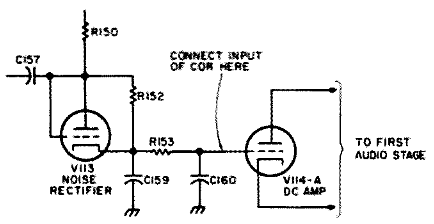

Fig. 12. Connection of the input of the digital COR to the squelch circuit of the repeater receiver. The circuit shown is a portion from a Motorola G-strip receiver. The connection point will be similar in other types of tube receivers.

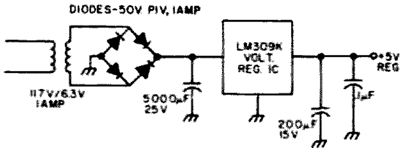

Fig. 13. Simple 5 volt regulated power supply.

commercial FM receivers the grid of the first stage following the noise rectifier has this characteristic. A simplified sketch of the squelch circuit of a typical tube-type receiver and the correct point of connection to the COR are shown in Fig. 12.

Once the shielded cable connection to the proper point in the receiver is made, determine if the squelch control threshold setting has been significantly altered. If so, the 10 and 22 megohm resistors must be substituted with ones of higher resistance. Some experimentation may be required to find the correct resistance values to match a particular receiver.

Next, inject a carrier signal into the receiver and adjust the 5k Ohm trimmer in the COR input circuit until the green LED lights at the desired level of receiver quieting. If consistent operation of the input circuit cannot be obtained for any setting of the trimmer, the ratio of the two input resistors will have to be varied, remembering not to let their sum be less than the value that will leave the squelch threshold setting unaffected. The voltage at the gate of Q1 compared with the typical gate voltage noted on Fig. 6 should be used to determine which way the ratio must be altered. The value of the resistor between the gate and ground must be increased if the amplitude of the gate voltage is significantly less negative than -1.0 volts during carrier reception. Conversely, this resistor must be decreased if the negative excursions of the gate voltage are significantly more negative than -1.0 volts.

If a signal generator is not available, the input adjustment may be made by varying the squelch control to simulate carrier reception. Opening the squelch control until audio noise is heard roughly corresponds to the reception of carrier, thus causing the input circuit to switch "on" when the 5k Ohm trimmer has been suitably adjusted.

In all cases of difficulty, the typical voltages given in Fig. 6 should be used to help diagnose the problem.

This completes the settings and adjustments of the COR.

Optional Circuits

As was previously mentioned, the digital COR requires a well regulated five volt power supply. For those who don't have a personal preference, the circuit of Fig. 13 is suggested as the simplest and probably the cheapest available.

The digital COR was originally designed to control a solid state switch that did the actual transmitter keying. For those who prefer to use a relay to switch on the transmitter, the circuit of Fig. 14 is offered. The diode should be attached directly across the relay coil to prevent inductive transients from damaging the semiconductors.

Finally, Fig. 15 shows a simple tone burst circuit that can be used for an audible indication that the three minute timer has been reset.

Conclusion

The digital COR described in this article has been used successfully with both G.E. Progress Line receiver strips and Motorola Sensicon G-strip receivers. The COR is currently in use on the WRØAGZ repeater in Sioux City, Iowa. ■

References

[1] Signetics Linear Data Book, 1972, page 177.

[2] Joseph M. Steim WA1OMS, "IC Repeater Logic System," *73,* Sept. 1973, page 27.

[3] G. Allen W2FPP, R. Sobus K2QLE, "Repeater Control with Simple Timers," *Ham Radio,* Sept., 1972, page 46.

[4] Clifford Klinert WB6BIH, "Repeater Keying Line Control," *73,* Feb. 1973, page 60.

Parts List

Q1 – Radio Shack 276-112 N-Channel JFET
Q2 – HEP 52
Q3, Q5 – HEP 726
Q4, Q7, Q11 – HEP 719
Q6, Q8, Q9, Q10 – HEP 736
D1-D5 – small signal germanium diodes
IC1 – SN7400 Quad NAND gate
IC2-IC5 – NE555 Timer IC
LED1 – yellow light emitting diode
LED2 – green light emitting diode
LED3 – red light emitting diode
All .01 uF caps are 25 volt disc ceramics
All fixed resistors are ½ Watt, 10% tol., resistance as marked on schematic
SW1 – DPDT, center-off switch

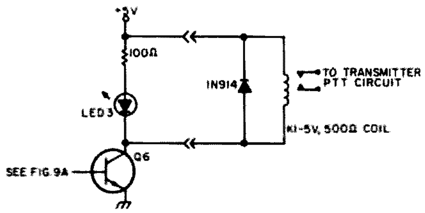

Fig. 14. The addition of a transmitter keying relay to the digital COR.

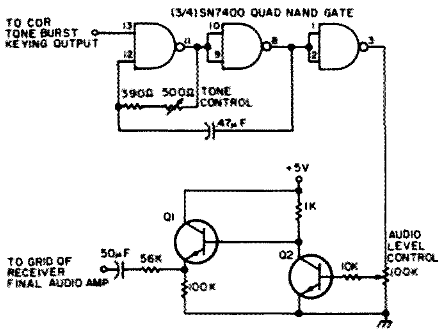

Fig. 15. A simple tone burst circuit that can be used with the digital COR. Q1 and Q2 can be any small-signal NPN transistors.

EDITORIAL BY WAYNE GREEN

from page 4

in very small type so as to get the most material I could on each page. Older readers can be thankful that I, too, have one foot in the grave.

Eventually I managed to put my foot down (the other foot) and get things going the way I wanted them ... some day I'll tell you the inside story of how I managed to lose BYTE and all that mess ... suffice it to say the motto I have above my desk applies very well to me ... "Intelligence is no impediment to stupidity." Anyway, we will be running four columns in *73* most of the time for a while. There will be a few three column articles, using up type already set. See how you like it ... compare it, if you get a chance, with the layouts in *CQ* ... if you can find a copy anywhere. They are using giant type, two columns, apparently because they have too little material to fill their pages. In this way they seem to have merely enlarged the old two column pages to the new size. *Ham Radio* has done about the same ... very large type, lots of blank white page ... so it takes very little material to fill the magazine. It does give it a nice uncluttered look ... perhaps you prefer it.

QST uses the standard three column format, which was no surprise.

In time we should settle down in *73*. We'll use four columns and see how we and you like it. We'll try to get our diagrams settled down in size and go for nice big and clear photographs.

Several readers seem to have accepted the idea that the larger magazine is in some way magically less expensive than the smaller one. It sure would be nice if this were true, but It is just another myth. The monthly cost of printing *73* varies with the size of the magazine, and that varies with the number of ads ... the more ads the more articles you get ... remember that, if you happen to work for a ham manufacturer, ham dealer, or computer firm ... or if you have any dealings with any such. At any rate, after four issues at the new size I can tell you that the cost of putting out *73* has gone from around $25,000 a month to around $40,000, just as I said it would. Now who do you think is going to have to pay that extra money? You know darned well ... it will come out of your pocket one way or another ... some in increased subscription rates, some in increased prices on ham gear. Hopefully you are enjoying the new big size enough not to care about the few extra bucks. If you add in the additional postage costs it isn't all that few bucks. The tab comes to perhaps $250,000 extra a year in printing costs and postage. That's $2.50 each for 100,000 readers! Enjoy ... enjoy.

PROCESSING OSCAR

Here's a picture of Franklin WB4BWK who, together with VE2BYG/3 ... now VE3SAT, made the first computer-to-computer QSO via Oscar 7 mode B on October 9th last. This came about on orbit 4101 using ASCII RTTY ... a ham radio first.

Franklin has now interfaced his Oscar station with Erskine College's PDP-11 minicomputer and he is looking for RTTY/ASCII contacts via Oscar 6 or 7, mode A or B.

PEACEMAKER?

A note from a reader out in Michigan grumbles that he has been warned that his newly installed pacemaker should not be exposed to rf ... like diathermy, microwave ovens, transmitters and such. I suspect that he has been over-cautioned ... those ovens are extraordinarily shielded and a well matched and grounded ham rig should have little detectable rf around. How about it all you experts, what is the story? Do pacemaker hams have to run QRP and eat in places without microwave ovens?

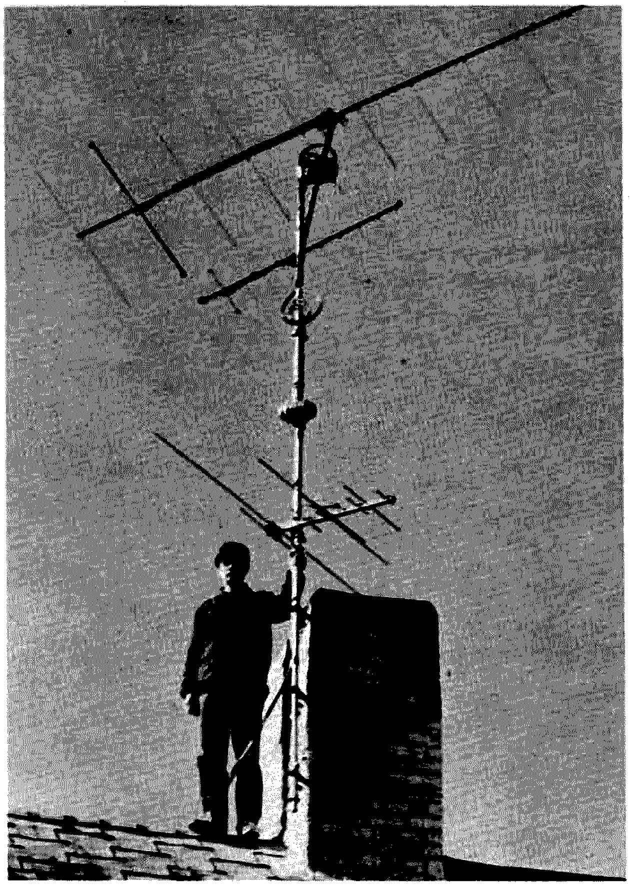

PAYING FOR REPEATERS

As more and more repeaters are put on the air, the question of who is going to pay for them gets stickier and stickier. It isn't all that difficult where there is a bonafide repeater club which is handling the situation ... having regular meetings, classes for newcomers, charging dues, putting out a newsletter, etc. ... but where an individual has set up a repeater and then tries to force the users to reimburse him for the expenses involved ... that's going to take some discussion.

Not a few complaints have been received by *73* over this problem. Typical is a user gripe about WR1ABN in South Walpole, Mass., just outside Boston. This 147.69-.09 repeater is using a public channel and thus keeping other repeaters from being able to use it ... and there are quite a few groups that would dearly love to get the channel. A recent letter from Mario K1UHU, the proprietor of the repeater, asked for contributions. A local amateur who supports two local repeater clubs with dues got this letter and, when he didn't send the demanded money, says he was asked by K1UHU to get off the repeater and stay off.

My own reaction to such a demand would be to get madder than hell. I know for a fact that several of the locals who have gotten this rude treatment did react as I would. Thus we have a really miserable situation ... amateur radio is supposed to be fun, yet we have UHU out there doing his darndest to louse it up for a lot of people ... including himself. He has come on a great way to get unending kerchunkers and unsolicited nasty comments, as many arrogant repeater owners have discovered.

How would you feel if you got hit with something like this? It isn't practical to pay money to every repeater in your area ... few can afford it. Does that mean that unless we pay someone off we can't use a repeater? With the serious shortage of repeater channels in most areas perhaps it is about time to ask the coordinators to assign the best channels to the free and open repeaters ... the next best to clubs with a relaxed user policy ... and what is left, if anything, to people who want to charge for use of their repeater ... and move them off to 220 or up when a legitimate group needs a pair.

Not wishing to be controversial about things, I'll say no more ... right now ... so no mention of Tony Baloney and his pirate group will be made ... tempting though it may be.

DEREGULATION AND CB

One of the biggest turnarounds in communications has been the enormous change in citizens band operations ... and the amateur reaction to this change. Just a couple years ago CB was a dirty word to most amateurs and they wouldn't be caught dead operating on eleven meters. Today tens of thousands of amateurs are getting with CB and joining in the fun there.

There has been a big change in CB due to the relaxation of the FCC rules permitting what had previously been illegal (virtually all of the CB communications), the present extreme low in sunspot activity and resultant lack of 11m skip, and the large influx of truck drivers spreading their friendly greetings to each other ... and to the little four wheelers getting in their way.

I remember just a little over a year ago when there was one other local amateur on CB ... Herman WA1MYS. Now I think a third of the local club members have a CB rig in their cars ... and the rest are getting edgy.

A couple years ago the few ham clubs which had tried to scout the CB ranks for ham prospects reported discouraging results. Now it appears that a good percentage of the ham club Novice classes are filled with CBers ... all anxious to move up to a ham ticket.

Continued on page 76

Looking West

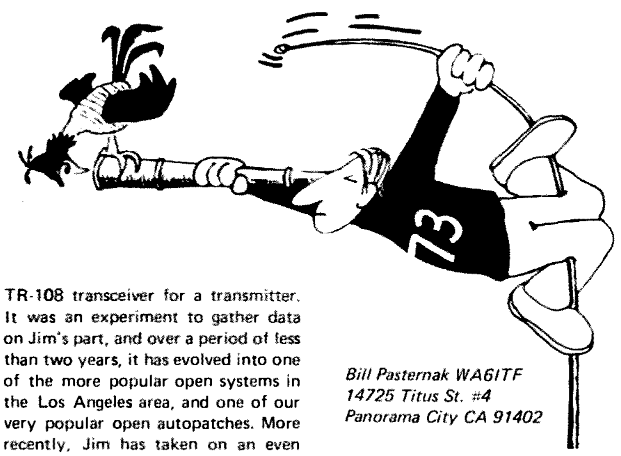

Bill Pasternak WA6ITF
14725 Titus St. #4
Panorama City CA 91402

Okay, you are not going to see the original manuscript of this column, but instead of being typewritten, it is being hand printed. Seems that my typewriter has "once more" developed the "flu," or in its case, some broken springs. A, S and V have gone to the "happy hunting ground" with B and F not far behind. Before the situation developed to the "point of no return," I felt it incumbent to take the necessary steps to remedy the situation, and now "Blue Boy" (the pet name of my typewriter, so awarded in honor of its particular color) is back at the manufacturer's service center getting a quick rebuilding. Hopefully, he will be back in service by this time next month; however, in the interim, it's back to the old way — ball-point pen and lined paper. My goodness, it feels strange! Shades of PS-247.

How many of you know what happens when you send in that form 610 to renew your license? How many of you even know how a test is graded at the FCC office in Gettysburg PA? These were some of the points covered at the FCC Forum at SAROC '76. Representing the Commission was the chief himself, John B. Johnston K3BNS, head of the Amateur and Citizens Division. Now, I have been to a lot of talks given by a myriad of "officials," but I have never seen anyone as warmly received as Johnny. It is obvious that the amateur community likes this guy and, even more important, he likes us, and is willing to work with us to build a bright future for the amateur radio service and its members.

Through the use of color slides, John began his talk by taking us on a trip 2500 miles east to the city of Gettysburg PA. We met John's staff and learned how both amateur and citizens radio service licenses are processed, how STA's are issued, and many of the other intricate workings of his organization. In all, that part alone was quite an education, one that every amateur and CBer should be given. To say that Gettysburg is inundated with CB applications is the understatement of 1976! John's color slides and commentary explained the current problem with processing vs. time quite graphically. If we didn't understand or were unaware of their problem before, we sure understood it after this presentation.

Then John got into the meat of his dissertation: the future of the amateur service. He made it very clear that his intention was to deregulate wherever possible to enable amateurs to continue to experiment and develop new techniques and communications art forms. Wherever possible, we, the members of the amateur community, would be granted the necessary freedom to build toward a more viable amateur service, one designed to meet the needs of the future and one that would be as self-regulating as possible.

Since much of what he said has already been covered in *HR Report* and other publications, I will refrain from a long dissertation here. Suffice it to say that John is willing to work "hand in hand" with us to build a lasting future for amateur radio — at least that's the way I read it. I think that the amount of deregulation in the past few months tends to bear out this feeling. Anyhow, if no one else has said it to date, I will. From all of us: "Thanks, John. We are proud to have you as one of us."

Now this leaves a few questions. Will we be able to handle the responsibility that deregulation places upon the shoulders of us all? Are we willing to bury our personal prejudices and begin to work "hand in hand" with one another toward the future? Are we mature enough to be truly self-directing? If each of us is willing to do his or her share, regardless of how insignificant that share might seem at the time, we can and will make deregulation a success and moreover prove the confidence that John has in us to be well founded. Deregulation is a challenge, but I think that we are ready to accept it. More on this topic, a lot more, in future months of "Looking West."

And I wrote, "Believe it or not WR6AJP is a full-time 24 hour-a-day open autopatch that operates on an inverted split-split and has never been down due to technical failure" or something along those lines. I think that the AJP repeater read my mind, for just about the time the story was published, it did "go down" due to a technical problem. However, to Jim Hendershot WA6VQP, its owner, the whole thing was just the necessary motivation needed to build the new system he had been planning. According to Jim's schedule, the "new improved WR6AJP" will be back in service within 3 weeks, and once again the San Fernando Valley will have its favorite autopatch.

AJP's story is a very interesting one, in that Jim never meant it to become the popular system that it is today. As he tells it, the whole thing began as a fun project using a Motorola HT as a receiver, a single tone surplus decoder, and a Knight TR-108 transceiver for a transmitter. It was an experiment to gather data on Jim's part, and over a period of less than two years, it has evolved into one of the more popular open systems in the Los Angeles area, and one of our very popular open autopatches. More recently, Jim has taken on an even bigger responsibility. He was asked to serve on the SCRA's Technical Committee for the '76 year by the SCRA's new chairman Bob Thornberg WB6JPI, and has been handed the challenge of developing a set of "standards" for amateur use of touchtone in autopatch service. If you have a number of autopatch systems that you frequent, you might well be aware that in many cases it requires different tone levels to activate the decoding equipment to access, control, and use a given repeater equipped with autopatch service, be it open or closed. The establishment of standards for this, along with other forward-looking ideas, seems to be the goal for this year's "SCRA."

As mentioned earlier, Bob Thornberg WB6JPI has been elected the new "Mr. Chairperson" of SCRA, replacing Dick Flanagan W6OLD, who has retired after 3 hard years of service to that organization. The election of Bob to this post is interesting in that he is not only a repeater owner/delegate to SCRA, but he is also one of the most visible people involved in the Southern California FM scene. One might say that he not only represents the choice of the repeater owner, but the interests of the repeater user as well, for if the average repeater user were asked his or her choice as to who should be SCRA Chairman, the answer would probably be 'JPI.

Simply, Bob believes that people can solve their own problems, and is one of those rare individuals who possesses both technical expertise and common sense. Along with Burt K6OQK, he developed the inverted tertiary split plan fast becoming known as the "California Split Plan." He formed the first user support organization for an open repeater, the Mt. Wilson Repeater Association, a system of user support now being widely copied. He is one of the "good people" who is willing to listen to

Continued on page 134

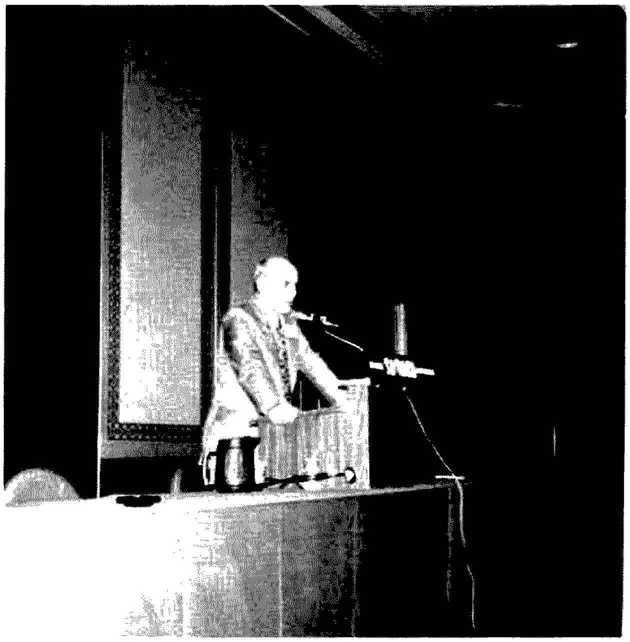

John B. Johnston K3BNS, Chief of the Amateur and Citizens Division of the FCC, at the SAROC '76 FCC Forum.

Fig. 1. Basic tone decoder.

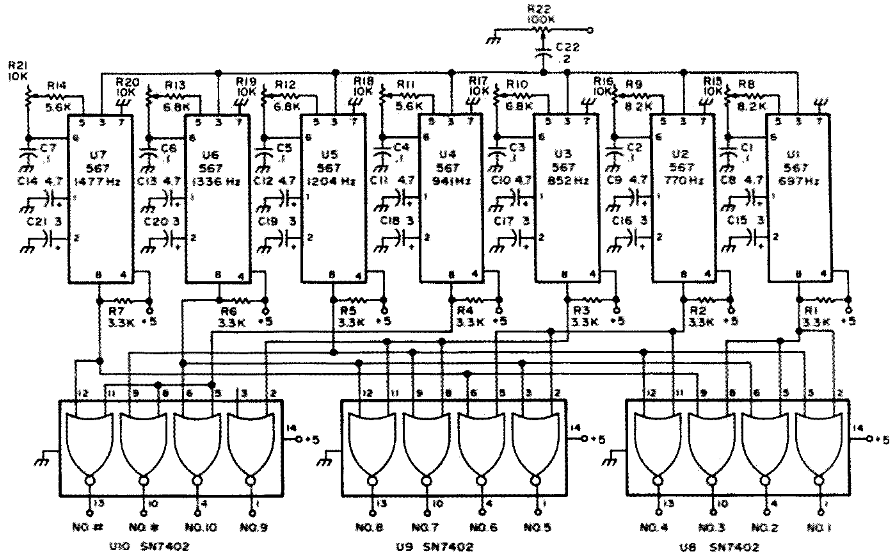

Warren MacDowell W2AOO
11080 Transit Road
East Amherst NY 14051

Touchtone Decoder

--using a calculator readout

With the advent of 2 meter FM and associated repeater systems, the "touch tone" system has found wide acceptance for both repeater control and dialing up autopatches. Probably the greatest reason for the touch tone system is the readily available touch tone pad, which is "ready made" and quite accurate in tone generation.

There are also a variety of touch tone decoding systems that have been devised. Most of these work well and generally control some major function of the repeater. When someone is dialing a function or placing a call with the autopatch system, I thought it would be nice to have a simple device that would read out the numbers dialed and retain them on a display until cleared manually.

The idea finally struck me that an el cheapo calculator would serve perfectly in this application. Just about any calculator can be used, yet retain its calculating ability while not serving as a memory. If you will observe the normal operation of a calculator, it progressively retains the digits entered on the keyboard. When the clear key is depressed, it erases this entry of numbers. Therefore if we were to parallel switches with the calculator keyboard switches and activate these switches with a touch tone decoder, the calculator would display the decoded digits until the calculator display range was exceeded or the clear key was depressed. Of course a 12 digit calculator is most desirable due to the number of digits it can retain in one display.

The first step is constructing a reliable tone decoder that is relatively insensitive to noise, etc. I have had very good results with the touch tone decoder described in the *National Linear Integrated Circuit Handbook.* This system uses the National LM567 which has high noise rejection, immunity to false signals and a very stable center frequency. The 567 Phased Locked Loop decoder was quite expensive ($9.00 each) until they sprang up on the surplus market. Radio Shack stores are now selling them for $3.50 each, which is not too bad. Seven of the 567s are required for the decoder and 3 SN7402 quadruple 2 input positive NOR gate ICs are used in the total decoder system. Fig. 1 illustrates the basic touch tone decoder. The complete decoder at present surplus prices can be constructed for about $30-$35.00.

The output (pin 8) of the 567 is normally "high" or at a potential of 5 volts. When a tone is decoded by the 567, the output goes low or nearly to ground potential. The desired frequency to be decoded is selected by the 10k potentiometer attached to pin 6. All of the 567s decoding as a group activate the proper 7402 gate and the output pin of the 7402 goes from a low to high state. This lends itself well for driving an NPN transistor which may switch whatever you desire.

If you want just an indicator lamp for each number that is decoded, an LED may be turned "on" by the NPN transistor with an appropriate current limiting resistor. I was fortunate enough to find a batch of 24 volt, 350 Ohm relays with four single pole contacts on each relay. At 24 volts, they required about 10-15

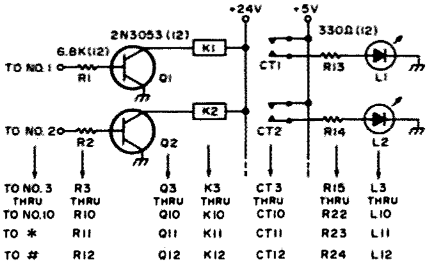

Fig. 2. Tone decoder drivers.

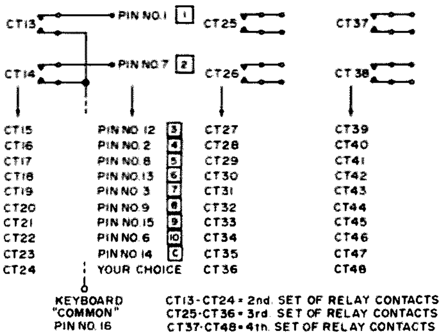

Fig. 3. Decoder/calculator interconnections.

milliamperes for reliable closure of the relay. The 2N3053 NPN silicon transistors drove these relays nicely. No doubt you will be able to find surplus telephone type or military relays that will meet these requirements. If you don't go the surplus route, the relays may cost as much as $5.00 each. No doubt some of the surplus houses in *73* will be able to provide inexpensive relays. See Fig. 2 for the transistor relay driver system.

Each 567 tone decoder can be "tuned" by either the use of an audio signal generator or a touch tone pad. The desired tone frequency is fed into the separate 567s while metering pin 8 (output) of that decoder. A fairly high level of audio should be fed in at first and the 10k pot should be varied until the output drops to zero. This will indicate that you have arrived at the decoding frequency. Keep reducing the audio level and varying the pot in small increments until you find the lowest level at which the 567 will detect. This will be the most selective and sensitive position for the 567. This procedure should be continued throughout the remaining tone decoders.

If you do not have access to an audio generator, a touch tone pad may be used for alignment. (See Fig. 4.) By depressing the proper *pairs* or combinations of numbers on the touch tone pad, you can create the specific frequencies needed for alignment (this may not work on some newer pads). Follow the same procedure as that used with the audio generator. Should you have access to a frequency counter, it might be wise to test your particular touch tone pad to make sure it is on frequency. It might be especially "prudent" to do this if the pad was given to you or if you purchased it at a special sale price.

The first set of relay contacts on the 12 relays are used to activate LED readouts. The second set are in parallel with the calculator keyboard. The third and fourth sets are for anything you so desire. The main reason for using relays rather than solid state devices is to compensate for the wide variety of calculators on the market. Some of these employ a positive ground and others, a negative ground system. Relays may be wired to either system without need for a PNP or NPN type of solid state switching device. Check out your particular keyboard as it may require a common bus to all switches or individual leads to all switches. If in doubt, wire all of the keyboard switches separately to the relay contacts. Only keyboard switches 1 to 0 will have to be wired to the relays. * and # relays could be used to clear or add the calculator in some clever setup.

Fig. 5 is the schematic and wiring system for the Western Electric touch tone pad. This is the configuration used for tuning up my decoder. The 500k pot is adjusted for desired output.

Audio Frequency	Press These Touch Tone Pad Buttons Simultaneously
697 Hz	(1, 3) (1, 2)
770 Hz	(4, 5) (4, 6)
852 Hz	(7, 8) (7, 9)
941 Hz	(*, 0) (*, #)
1204 Hz	(1, 4) (1, 7) (1, *)
1336 Hz	(2, 5) (2, 8) (2, 0)
1477 Hz	(3, 6) (3, 9) (3, #)

Fig. 4. Pairs that may be pressed to generate single alignment tones.

Fig. 6 is the regulated 5 volt power supply for the basic tone decoder. The relay power supply depends on the particular voltage relay you are able to obtain on the surplus market. With relays, the power supply filtering and regulation need not be critical. A simple bridge rectifier and filter capacitor should be adequate for the relays. Remember, however, that the dc output will be at least 1.4 times the ac voltage rating of the transformer with the bridge/filter capacitor supply.

This system provides an inexpensive touch tone memory that can be tailored to your requirements. The next time someone threatens to turn the repeater off through some "magic" combination of touch tone numbers, your "el cheapo" calculator will remember them. You take it from there — hi! ■

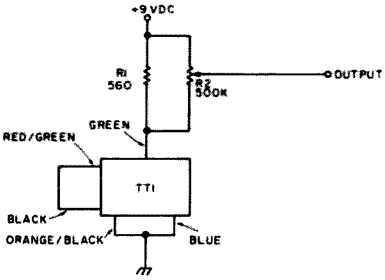

Fig. 5. Touch tone pad wiring.

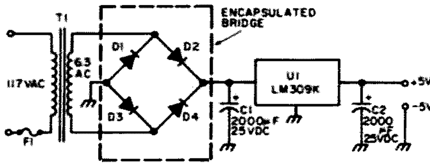

Fig. 6. Power supply.

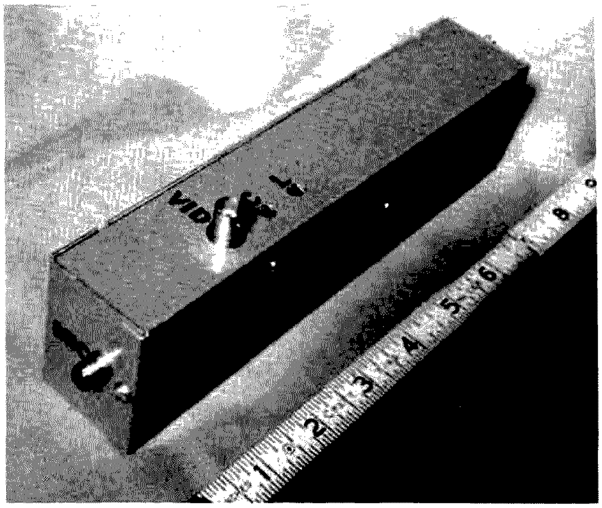

A

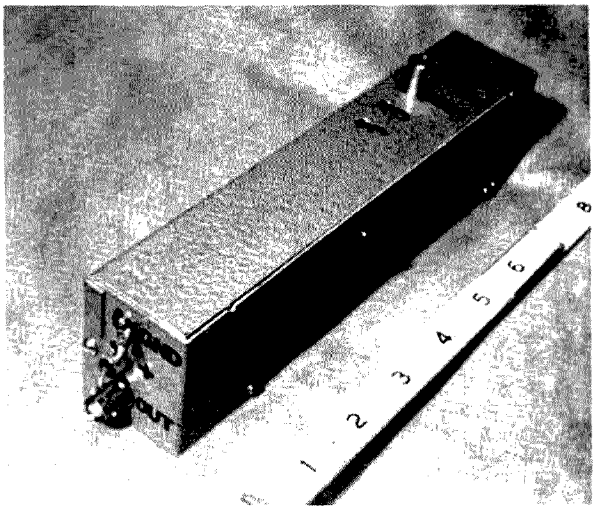

B

Bruce Brown WB4YTU/WA9GVK
4801 Kenmore Ave. #1022
Alexandria VA 22304

Simple Amateur TV Transmitter

-- at a QRP price

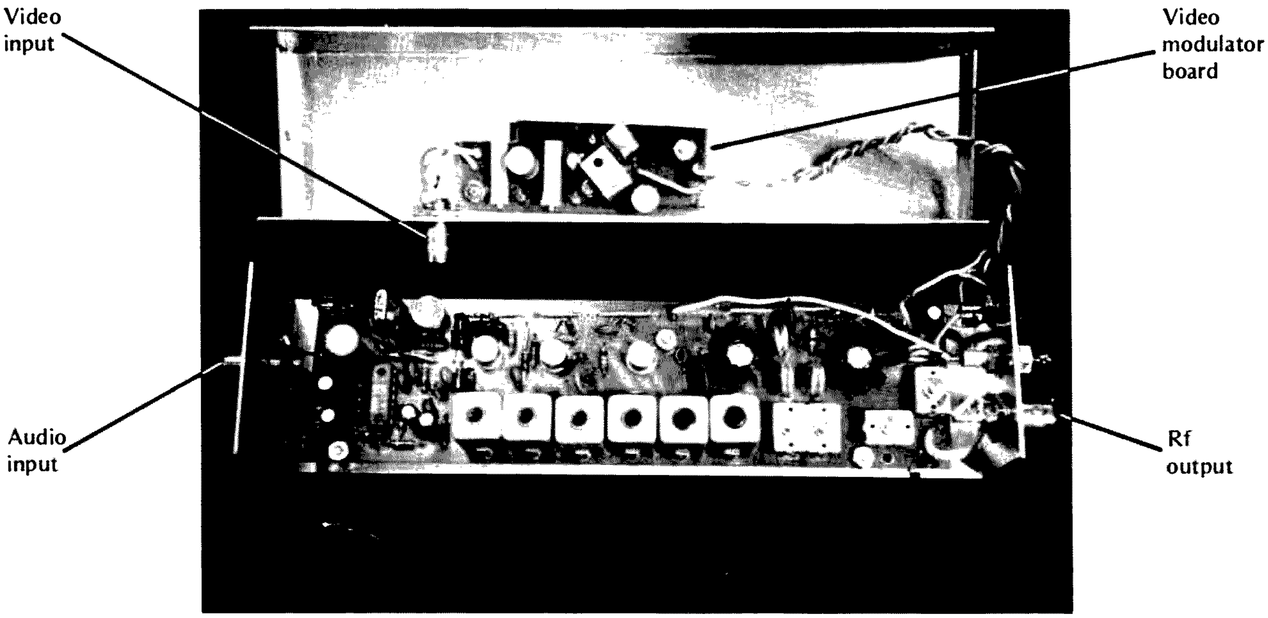

C

Fig. 1. 3/4 Watt ATV transmitter. (a) Mike input side; (b) output side; (c) internal view.

Smaller than a box of spaghetti and costing about $55 to build, this 3/4 Watt 3/4 meter ATV rig can simultaneously transmit AM video and FM audio on the video carrier. The unit is basically a VHF Engineering TX-432 transmitter, which is collector modulated using the HR-440 video modulator described in the Nov/Dec 75 *73* (pp. 42-43). Good linearity and excellent frequency response is achieved as shown in Fig. 2. Power drain is approximately 350 mA at 12 to 14 V dc.

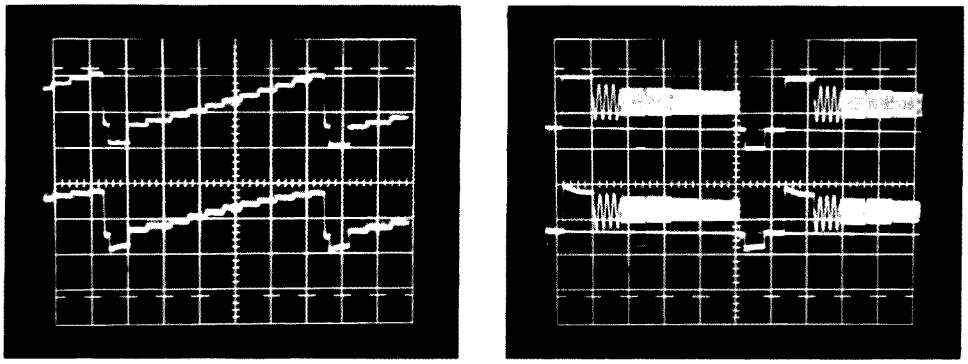

A B

Fig. 2. Performance curves (all vertical scales uncalibrated). (a) Linearity: top scale, video in; bottom scale, detected rf output; 10 usec/div horizontal; 3/4 Watts out (ave.). (b) Frequency response: top scale, video in; bottom scale, detected rf output; 10 usec/div; 3/4 Watts out (ave.); burst order (in MHz) – 0.5, 1.5, 2.0, 3.0, 3.58, 4.2.

Applications

What can you do with a QRP ATV transmitter? Possible applications include:

1. Operating as a primary station rig, it can provide snow-free pictures over a 5 mile line-of-sight path between stations using 10 dBd gain antennas and 2.5 dB noise figure preamps. Better performance can be expected in areas where inversion layers are prevalent, such as Southern California. Especially effective operation results when used in conjunction with an ATV repeater. For example, W3API, located 3 miles from the WR4AAG TV repeater in Alexandria, Va., can send snow-free pictures to W3IRL who is 45 miles away in Baltimore.

2. The rig can be used as an exciter for a 1 Watt in, 10 Watt out linear amplifier such as the quasi-linear Motorola MHW-710 power module. (See Nov/Dec 75 *73*, p. 39, and Motorola MHW-710 data sheet #DS 5522 R2.)

3. It can be mounted inside a portable TV camera to create a self-contained hand-held station. If placed in a large R/C model airplane or rocket, such a system could provide some spectacular pictures.

4. It is ideal for general mobile applications (e.g., auto, aircraft) due to small size and power consumption.

5. Low power consumption also lends itself to solar-powered operation suitable for remote unmanned usage such as hidden transmitter hunts.

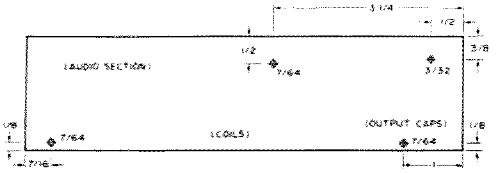

Fig. 3. TX-432 PC board drill guide. All dimensions in inches. Foil side down; component side up.

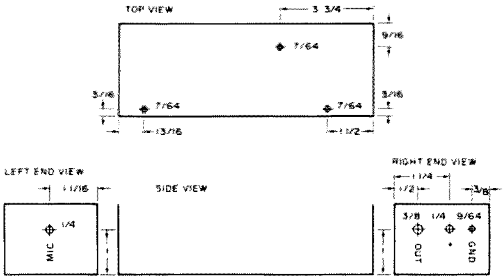

Fig. 4. TX-432 chassis drill guide. All dimensions in inches. All measurements from outside edge of chassis. Chassis is LMB #850. Guide not drawn to scale.

Modification Procedure

1. Drill holes in PC board and chassis using Figs. 3, 4 and 5 drill guides.

2. Construct, tune up and test TX-432 transmitter strip per manufacturer's instructions. Be careful that capacitors soldered to L1-L6 do not touch the coil cans. If necessary, insulate the inside surface of the cans with tape.

3. Locate coil L11. Unsolder the end connected to the +12 V dc line. Mount a miniature insulated terminal in the 3/32" hole provided by Step 1, above. Solder loose end of L11 to terminal (Fig. 6).

4. Mount all components to the video modulator PC board as described in the Nov/Dec 75 *73*, page 42, with the following exceptions:

a) R2 will be 100 Ohms.

b) Do not clip off tabs of D40 and D41 transistors. Instead, bend tabs down as shown in Fig. 1. Bend tab of D41 down and back onto itself to prevent the tab from protruding beyond the edge of the PC board.

5. Solder 6", #22 stranded wires to ground, +, and OUT on the video modulator board. Twist ground and + wires together. Solder 1" long wires to ground and IN at the other end of the board.

6. Solder 2½" length of RG-188 to the output of the transmitter board. The RG-188 shield length, soldered to ground of board, should be as short as possible.

7. Using 3/16" standoffs, #4 screws, lockwashers and nuts, mount the transmitter and modulator boards to the chassis.

8. Mount VID (video in) and OUT (rf output) BNCs to chassis. Also mount phono jack, feedthrough capacitor and two ground lugs using a #6 screw, lockwasher and nut. One lug is mounted inside the case; the other, outside.

9. Solder shield and center conductor of the RG-188 from the transmitter strip to the OUT BNC. The shield should be soldered directly to the threads of the connector and should be as short as possible.

10. Solder a #22 insulated wire from the feedthrough capacitor to the +12 V dc line on the transmitter board. Solder the ground lug on the chassis to ground on the board. Solder wires from the phono jack to mike input and ground on the board.

11. Solder 1" input and ground wires from the video modulator board to the VID BNC. Solder twisted + and ground wires from the same board directly to the feedthrough cap and ground lug on the chassis, respectively. Solder the wire from OUT on the video modulator to the insulated terminal (one end of L11) on the transmitter board.

Fig. 5. TX-432 chassis cover drill guide. All dimensions in inches. All measurements from outside edge of chassis. Chassis is LMB #850. Guide not drawn to scale.

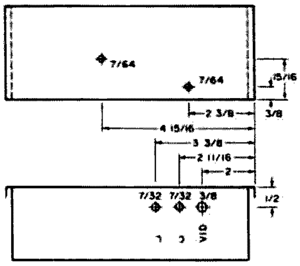

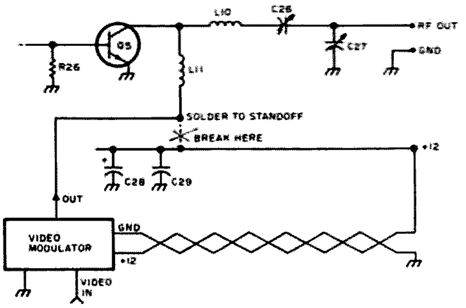

Fig. 6. Modification schematic.

12. Apply stick-on lettering to the case as shown in Figs. 1, 4 and 5.

(Tuneup)

13. Connect the output of the rig to a wattmeter with a dummy load or through-line wattmeter with an antenna. Turn "L" (level) control on video modulator fully clockwise and "C" (contrast) control fully counterclockwise. Connect a 12-14 V dc, ½ A regulated power supply to the + and GND terminals. Connect a composite 1 V P-P video signal to the VID connector. Monitor the rf output on a converted TV receiver.

14. Adjust C24, 25, 26 and 27 on the transmitter for maximum power output. Approximately 1 Watt should be obtainable. Alternately turn "L" counterclockwise and "C" clockwise for best picture on the TV receiver. You may have to readjust C24-27. Do not set the contrast too high or else sync buzzing will occur on the audio channel. (As described in the Nov/Dec 75 *73*, p. 40, a separate FM receiver is required to demodulate the audio.) During this tuneup procedure you will note that the "C" control affects only contrast while the "L" control will affect both output level and contrast. In general, the higher the output level, the lower the contrast. A good picture at 3/4 Watt will be possible.

Parts List

Part #	Description	Qty	Unit Cost	Total Cost	Source of Supply
1	8-1/2 x 2-1/8 x 1-5/8 Chassis; LMB #850	1		2.50	Electronic Supply
2	UG-1094 BNC Bulkhead Connector	2	.85	1.70	Electronic Supply
3	Phono jack Bulkhead Connector #274-346	1		.37	Radio Shack
4	.001 uF feedthrough cap; Erie 327-005-X5UO-102M	1		1.62	Electronic Supply
5	Subminiature 2-56 insulated terminal Cambion #601-1531 (15 per package @ $2.00)	1		.17	Electronic Supply
6	2-56 nut and lockwasher for standoff	1 ea			Hardware Store
7	1/2" 4-40 screws, lockwashers and nuts	5 ea			Hardware Store
8	3/16" long #4 spacer (2 nuts may be used for spacer)	5 ea			Hardware Store
9	1/2" 6-32 screw, lockwasher, washer & nut	1 ea			Hardware Store
10	#6 hole terminal lug (ground lug)	2			Hardware Store
11	#22 stranded wire	36"			Electronic Supply
12	Stick-on lettering kit				Stationery Store
13	Video modulator PC board; etched, cut and drilled with RG-188 cable	1		3.00	Stu Mitchell WAØDYJ 14761 Dodson Woodbridge VA 22193
	Video modulator board parts:				
D1	1N4001 Diode	1		.20	James Electronics
R1	100 Ohm pot, #43P101 Spectrol	1		1.35	P.O. Box 822
R2	100 Ohm, 1/4 Watt, 10%	1		.05	Belmont CA 94002
R3	5k Ohm pot, #43P502 Spectrol	1		1.35	(415) 592-8097
R4	1.0k Ohm, 1/4 Watt, 10%	1		.05	Add 5% for postage
R5	82 Ohm, 1/4 Watt, 10%	1		.05	$5.00 min order
R6	4.7k Ohm, 1/4 Watt, 10%	1		.05	
R7	10k Ohm, 1/4 Watt, 10%	1		.05	
C1, 2	100 uF, 16 V dc Radial	2	.19	.38	
Q1, 2	2N2222A	2	.20	.40	
Q3	D40D7 (GE)	1		2.35	Spectronics
Q4	D41D7 (GE)	1		(both)	1009 Garfield St.
				Ppd	Oak Park IL 60304

TX-432 Transmitter kit is available from VHF Engineering for $39.95 (PO Box 1921-7, Binghamton NY 13902).

Required Tuneup Tools

1. 0.075" plastic hex alignment tool (GC #9304; $0.55)
2. Phenolic screwdriver

Notes:

1. A 0.5 Amp regulated 12 to 14 volt power source is required.
2. The crystal is a commercial standard, 20 pF in an HC-25 package. Frequency is desired rf frequency divided by 24.

Acknowledgements

I am grateful to Charles Spitz W4API, for providing the TX-432 transmitter strip and other needed components. Terry Fox WB4JFI provided valuable suggestions and test equipment used for optimization of the modification design procedure. ■

Bruce J. Brown WB4YTU/WA9GVK
4801 Kenmore Ave., Apt. 1022
Alexandria VA 22304

Amateur TV Receiving System

-- some of what you wanted to know

Because of practical and regulatory considerations, amateur television (ATV) transmitted power levels must be considerably lower than those radiated by commercial broadcast stations. To attain reasonably long operating ranges, the ATV receiver must compensate for what the transmitter cannot do. Thus, it must exhibit a considerably greater sensitivity than that required for broadcast reception.

An increase of only 3 dB in receiver sensitivity can make a noticeable improvement in picture quality. It is therefore important to squeeze every last dB out of a receiver system – and getting those extra dB at 440 MHz is far more difficult than on the lower frequency bands. Nevertheless, through proper component selection, a high performance and reasonably priced receiver is a reality.

Throughout the past two years, the Metrovision Amateur Television Club of Greater Washington D.C. has been examining numerous components and configurations in an effort to engineer an ATV receiving system with the following characteristics:

1. Excellent sensitivity.
2. Reasonably low cost.
3. As many off-the-shelf and readily available components as possible.

These design goals were established at the outset with one overall consideration in mind – that is, to make it as easy as possible for people to receive ATV.

Based upon these goals and after considerable testing, such a system has been developed and has proven to be successful. Fig. 1 shows the configuration and Table 1 lists recommended components, costs and sources of supply. Specific brands are stated in lieu of providing only generic names. This is necessary since performance varies greatly from product to product. For example, a Radio Shack UHF-to-VHF converter, which performs well for commercial broadcast reception, is a bummer for ATV work. It should be emphasized that the Metrovision ATV Club is a non-profit group and has no financial ties to any of the companies mentioned. The recommendations are totally objective and based upon 2 years of comprehensive on-the-air tests. Furthermore, the equipment recommendations pertain only to optimal reception of wideband TV signals in the 3/4 meter band and may not necessarily be the components desired for receiving other signals such as narrowband FM or moonbounce.

In addition to providing a picture, this configuration will allow audio to be heard on the TV receiver only when the receive signal employs 4.5 MHz subcarrier audio (FM audio located 4.5 MHz above the video carrier). Incidentally, this is the output format used by an ATV repeater. When operating simplex and receiving a signal using an audio-on-the-video carrier format, a separate FM receiver must be used to pick up the audio. Low cost receivers for this purpose include the VHF Engineering RX432C kit ($79.95) or surplus Motorola UHF Pocket Pager (under $40). The antenna of these receivers could be a short piece of wire wrapped around the preamp output cable to provide signal coupling from the large antenna.

Keep in mind that your investment in good transmission line and an antenna is doubly worthwhile since these components will also be used when you're ready to transmit ATV. Try to get your antenna up as high as possible and away from nearby obstructions including trees. When conditions are right, don't be surprised if you get some good ATV DX!

ADDENDUM
Blonder-Tongue UHF-to-VHF Converter Modification

A modified commercial UHF-to-VHF converter connected to the antenna terminals of a standard home TV tuned to an unused channel between 2 and 6 is the simplest and most effective means for receiving a fast scan amateur video signal. The lowest frequency normally tuned by a converter is about 460 MHz; therefore, modification is required to enable the converter to tune

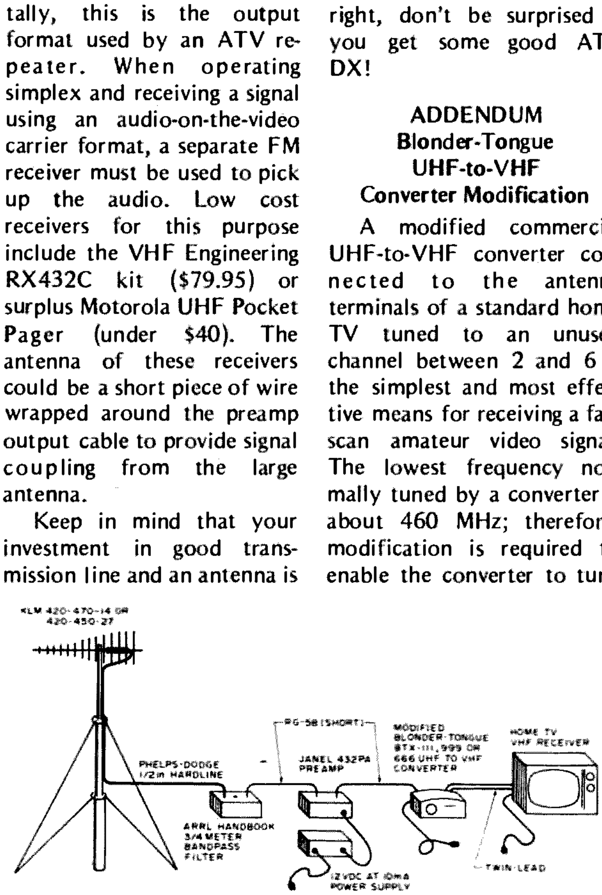

Fig. 1. Recommended ATV Receive Configuration.

Description	1975 Cost (Subject to change)	Source of Supply
I. Antenna		
KLM 420-470-14, 5 feet, 4 lbs, 13.7 dB iso gain	$21.95 + postage	KLM 17025 Laurel Rd. Morgan Hill CA 95037
—or—		
KLM 420-450-27, 10 feet, 7.5 lbs, 16.7 dB iso gain	$39.95 + postage	
With either antenna, use balun: KLM 1:1 Balun	$13.95 + postage	(408) 779-7363
Notes: 1. Use correct antenna polarization for your area. 2. Mount antenna high enough to clear nearby obstructions including trees. 3. 2 antennas may be stacked together for additional 3 dB gain.		
II. Transmission Line		
FX 12-50H, 50 Ohm, ½ inch outer conductor, insulated, min. bending radius = 5", approx. 1.9 dB loss per 100 feet at 440 MHz.	$ .68/foot	Phelps-Dodge Corp. Route 79 Marlboro NJ 07746
Connectors for above cable		(201) 462-1880
a. N female, #20-654	$ 6.50	
b. N male, #22-654	$ 8.50	
c. UHF female, #66-654	$ 6.50	
d. UHF male, #68-654	$ 5.50	
—or—		
FXCC12-50H same as above but corrugated outer conductor; considerably more flexible and easier to work with.	$ .90/foot	
Connectors for above cable		
a. N female, #20-500	$ 8.25	
b. N male, #22-500	$ 8.25	
c. UHF female, #66-500	$ 8.50	
d. UHF male, #68-500	$ 7.00	
Note: RG-8 cable can be used for runs up to 50 feet. Measured loss ≅ 3 dB/50 feet (2 dB worse than hardline).		

down into the 420-450 MHz amateur band.

Considering sensitivity, stability, and cost, the best converters for amateur use are the Blonder-Tongue BTX-111, 999 and 666. All of these units can be modified using the same procedure as follows (see Fig. 2):

1. Remove six screws from back and pull off channel knob from front.
2. Spreading out top and bottom of plastic case, push out chassis by applying pressure through rear rectangular opening.
3. Locate C1 on top of chassis (see Fig. 3). Gently turn clockwise as far as it will go. You have now changed the tunable frequency of the unit down into the amateur band.
4. From underside of the chassis locate L1 (see Fig. 4). It is a semicircular strip of metal located in the center of three sections along the main tuning control axis. Locate the point where L1 connects to L2. (L2 is two short parallel wires running between the center and rear sections.) Solder a 2-8 pF subminiature variable capacitor (e.g., Erie ceramic) in electrical parallel with L1 — one lead of the cap connected to the L1-L2 junction point and the other

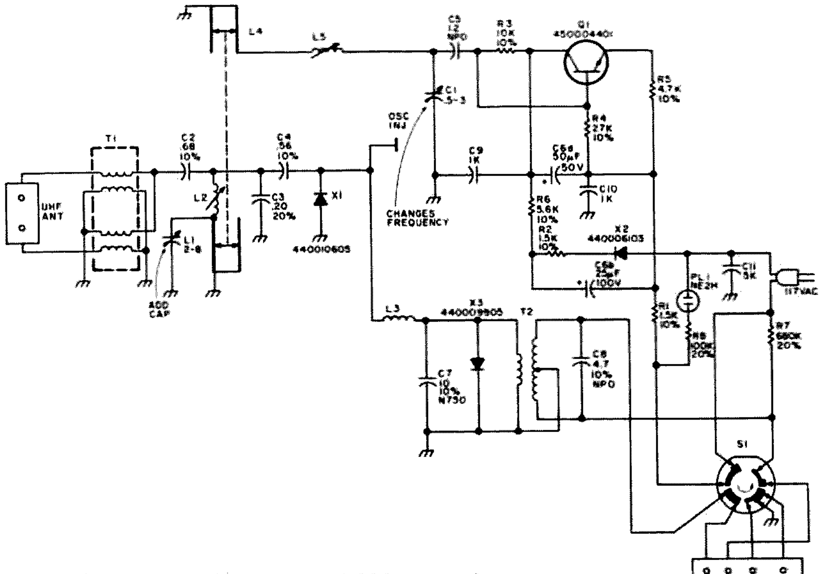

Fig. 2. BTX-999 Schematic. BTX-111 and 666 are similar.

III. Tunable 3/4 meter bandpass filter; Construction details in ARRL *Amateur Radio Handbook* or VHF manual Note: Filter greatly improves receive picture quality through reduction of out-of-band noise including commercial 450-470 MHz service and UHF broadcast TV signals.	About $5.00	Local electronics dist. and hardware store
IV. Preamp; Janel #432PA, comes fully built in chassis with BNC connectors. Requires 12 V dc @ 10 mA filtered power supply (e.g., Lafayette #99F50742, $10.95)	$33.00 postpaid	Janel Labs 260 N.W. Polk Ave. Corvallis OR 97330 (503) 757-1134
V. Modified UHF-to-VHF converter, Blonder-Tongue. Any of the following will work: a. BTX-666 b. BTX-999 (Same as 666 but has fine tuning control and channel light) c. BTX-111 (Same as 999 but has post amp, exhibits slightly better performance than other two if preamp is not used. If preamp is used, as is the case 95% of the time, all give equal performance.) Notes. 1. See Addendum for modification procedure which is identical for all units. 2. Make sure converter has a brown case. Earlier versions which were unstable used ivory cases.	 $20.00 approximately $23.90 $33.70	Lafayette Radio 111 Jericho Turnpike Syosset, L.I., NY 11791 (516) 921-7500 Stocks only BTX-111 (18F18319)
VI. Unmodified Home TV Receiver Notes: 1. Connect output of converter to VHF antenna terminals on TV set. 2. Turn channel selector to any unused channel between 2 and 6.		

Table 1. ATV Receive Configuration Component List.

lead to ground (wall between center and rear sections). Position the capacitor to permit easy access for adjustment.

5. Drill ½" hole in the bottom of plastic case to allow access to the capacitor after the unit has been "buttoned up."

6. Place the chassis back in the case along with the six screws in the rear and the knob in the front.

7. Connect the antenna transmission line (from the T/R relay or preamp) to the UHF ANT terminals of the converter. Connect 300 Ohm twinline between the converter's TV set terminals and the VHF antenna terminals of your TV receiver. Connect your existing commercial broadcast antenna to the VHF ANT terminals on the converter.

8. Tune your TV set to an unused channel between 3 and 6. Place converter front panel switch in UHF position. In general, the amateur band will be found between channel positions 14 and 20. Using a non-metallic screwdriver, adjust the capacitor for best picture. It need only be adjusted once. ■

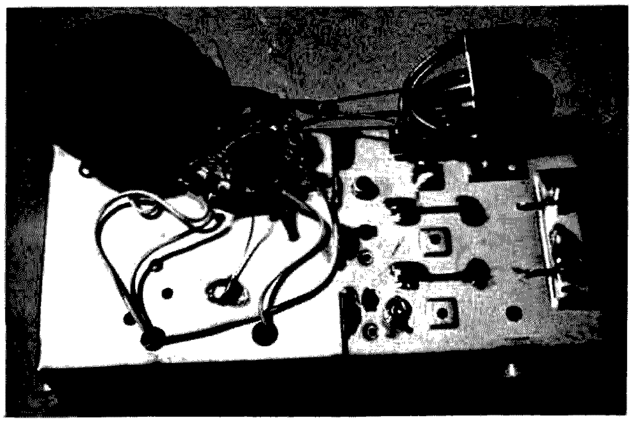

Fig. 3.

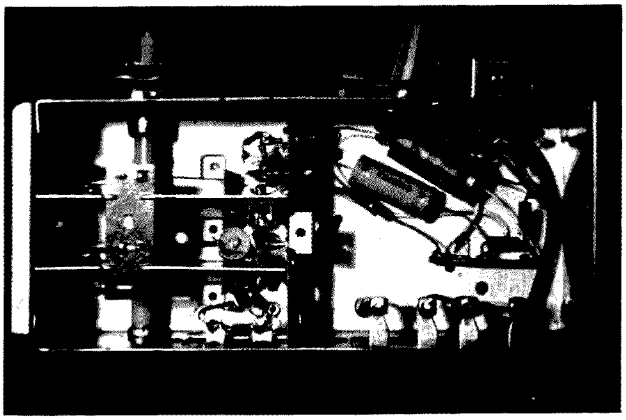

Fig. 4.

J. K. Bach
Ivy Hill Road
Walden NY 12586

Glass Arm

--the dreaded CW man's disease

This is the age of the Natterer. SSB, FM via repeater, Teletype, slow scan. And a little bit of Hand Modulation, mostly confined to Novices and old men.

Nearly all the old men use an electronic keyer of some sort, usually a very complex sort. A very few use the mechanical Vibroplex. None use a hand key, so far as I know. Only Novices use them, and in most cases, pretty badly. This is a pity, for the fluent use of a hand key is less a skill than a knack. In any case, the art has long since been lost.

There are any number of books that tell you how to hold and operate a hand key. Every book on learning code does, whether it's the Army Training Manual or those produced by various magazine and book publishers. They tell you everything but how to send, as long as you like, without acquiring Telegrapher's Paralysis, or "Glass Arm." Either they never heard of it, or think it wiser to leave the question alone. While very few of us use keys much, it *is* nevertheless a very useful and important skill.

The QRPP boys climb mountains with their two pound CW transceivers – besides VFO-buffer, FET, four transistors and an IC, the thing has to have a solid state keyer which is even more complex than the unit it serves. How nice if a small mechanical key – homemade – were mounted on the clipboard used for copying. Or even one of those Japanese dollar keys that have been kicking around for the last twenty years. Compared with the "good" solid brass telegraph keys, they never induce a "Glass Arm" – while the "good" ones will. So, the Japanese ones not only save money, weight, battery power and bulk, but they also save arms and improve sending, too.

It helps in your FCC examination if you can send properly. Only one in ten, or so, fail because of sending, but even that is too much. The straight keys are mounted on each desk where candidates sit. They are easily adjustable, and are usually left in some weird setting, such as with a half inch contact spacing.

The receiving exam eliminates many of the applicants, so that the examiner has only a few to watch, as he prepares to listen to each one. As each hopeful adjusts the key to his liking, the examiner makes bets with himself about who will fail and who will pass. He gives each applicant a paragraph out of a manual to send.

It is easy to tell if you passed. The examiner does not congratulate you and shake your hand; he listens to your four or five Vs and the first two or three words, and says, "That's enough." You'd like to finish the paragraph but he won't let you. From the first two or three words he knows that you could send for fifteen minutes without a mistake if allowed. He knows telegraphers; he's one himself. If he lets you send two sentences, you may scrape by. Half a paragraph only if he thinks he can find therein some excuse to pass you.

Receiving, of course, is an entirely different matter, requiring different skills. It is very definitely harder, as any ham knows.

In sending, there are two schools of thought about the management of elbows: on the table and off the table. If you embrace both, the key must be mounted on a board with a non-skid surface, so that it may easily be moved as required.

A hand key requires complete control. The hand must be easy and relaxed, but still in full control of everything the key-lever does. Do not depend on the return-spring; its function is to keep the key open when idle.

For your first practice session (of *course* you have to practice, but not for long) the key return-spring should be removed entirely. Put the spring in a glass jar so it doesn't get lost.

Now, in order to send, you have to "pump" the key-button up and down, holding it between forefinger and thumb. It is just as important to lift up as to press down.

A very good exercise is a long, slow series of dots. It is even better to time this by saying aloud: "Dot, uh, dot, uh, dot, uh," making the mark (dot) and space (uh) as nearly the same length as you can. When you get into the rhythm of it, it's easy. But don't speed up.

Silly as it sounds, this exercise will do a lot for you. Do it only until you begin to get tired of it, then quit, put the spring back in and send normally for a while. Don't push it. Next day, the same. When the dotting gets easy, then you don't need it any more and can forget it.

You will discover some-

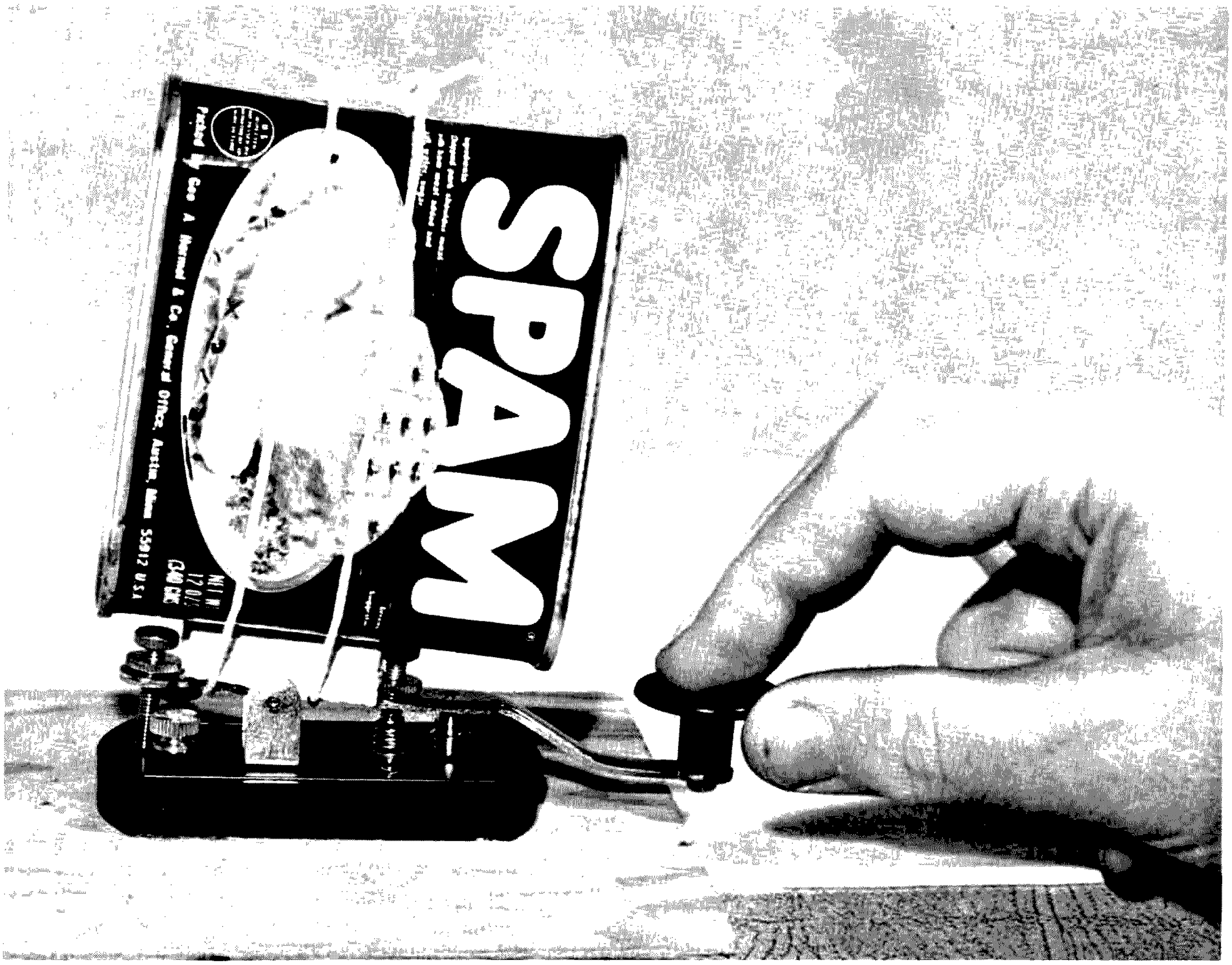

thing: You won't like the spring as stiff and heavy as you did before. Not really light, but not heavy at all.

One precaution: Don't let the family or friends hear you going "Dot, uh, dot, uh," because they'll think you're going dotty.

Only you can tell how much it has helped your sending. It will be less "choppy" and "itchy" than before. And you will develop a sense of timing that helps, not only with hand-sending, but also with many keyers. You won't need any "self-completing" feature, because you will be the boss of the keyer, not its victim. I have seen a keyer shake a man like a dog shakes a rabbit – a nervous phenomenon we'll come back to later. Learn to send even dots. It takes less than half an hour, spread over the week, and your sending – even on a printer keyboard – will improve. *And* be easier and more fun.

After dotting, dashing is even easier. Again you time it with words or syllables: "Da da *dash* uh dot uh dot uh dot ha ha ha da da *dash* uh da da *dash* uh da da *dash* ha ha ha da da *dash* uh dot uh da da *dash* uh da da *dash.*" Boy! – what a way to write it! The da-da-dash is all mark, key down, of course. It times the dash as equal to three dots run together, as it should. The "uh" is the unit space as before.

Now, we need a word space. "Uh uh uh" sounds like admonishing the cat, so I have substituted the friendlier "ha ha ha" as a three-unit space.

Of course, you can substitute French or Japanese or whatever, and in any case you don't have to practice this long. You need the practice only so long as it isn't easy. When it is, you have graduated. Don't make work out of it – do it for fun, and see how fast your sending improves.

I have emphasized slow sending – slow and even, with dots and unit spaces of like weight – because this prevents a jittery, choppy style which is hard to read and murder on the fist. It sounds a little heavy, but your dots never "drop out." And when you take your exam you will find that the black, cast iron Beast from Hell with the oil cup on top of it (which the examiner won't let you look at) is adjusted to send perfect code – not that stuff on tapes and records, and even on the air.

A very good check is to watch your plate milliammeter – you *do* have one, don't you? – or, for practice, send into your ohmmeter. Dotting should read exactly half the key-closed value, if you dot at reasonable speed. In the old days, telegraphers used to adjust their bugs this way, using line current as a guide.

If, in spite of everything (and I won't believe this) you still jitter and suffer from nerves when you send, a good stunt is to weight your key. Now you know what the photograph is about! I used a can of meat because metallic lead is poisonous, hard to handle, and more expensive

than the choicest cuts of meat. Any pound weight will do. A pint of milk, a pound of meat – anything. And it won't be wasted – fasten it on the key temporarily, practice a while, letting it slow and steady you down, and then eat whatever it is for lunch. I did, yesterday.

The British have understood heavy keys for a long time, while we laughed at them. We could send twice as fast with our light telegraph keys, while they used a key you gripped with a fist and – it seemed – pumped water with. We laughed, but did you ever see a Limey Sparks with a glass arm?

Again, try to prevent your friends from seeing the weighted key, but if they do, shrug and laugh along with them. Which of you is learning the most, and who is laughing when he could be learning? You're earning your opinions. Let them have their fun.

So far I haven't mentioned the "tapping" technique. There was once a popular radio organization of "A-1" guys called "I Tappa Key." Do you know who taps keys? Old telegraphers with glass arms and their imitators, that's who.

It seems stilted and pretentious (and inflexible!) to sit down with your feet flat on the floor and send with a hand key, using the edge-grip. This is very much like the Palmer Penmanship Method which we Faithful Old Fellows learned generations ago. And this is no accident. If you write a lot by hand, you either use it, or your hand cramps and you wind up writing an illegible scrawl.

Besides, editors demand typewritten material, and for good reason.

While I write like a doctor, I can send with a hand key as long as I want to – with very few errors. *And* with a Bug, *and* with any solid state keyer.

I had a buddy once, who got himself a glass arm. He could not send even one word with his right hand, so he switched over and relearned to telegraph with his left. It was just a matter of time before the left went too, but he got himself promoted and didn't have to telegraph any more. So there is a remedy, but avoidance is the best policy.

And this is easy. The secret is in the key adjustment – you loosen the "trunnions," or the tightness of the needle-and-cone bearings on each side of the key, until you can shake the key lever from side to side. *There must be as much side-play in the lever as there is up-and-down motion between the key contacts.* That's all there is to it.

You won't believe this. That's all right; I didn't believe it either, until I proved it through experiment. The dollar key I mentioned earlier has *no* side adjustment. Either it has cylindrical ears that poke through holes in the U-shaped mounting bracket, or it has conical ears which should be ground into cylinders. Never mind the sloppy feel; your arm is more important than anyone's opinion. You *need* that slop, whatever key you use.

Probably you have a good solid brass key with side adjustments. Well then, unscrew the side screws and lock them at the point that you can move the lever sideways the same amount that you pump it up and down. It will feel "funny," but send a few minutes – at least a paragraph. If you can keep going, do so.

Now adjust the key up snug. Not to binding, or with noticeable friction; just barely enough to prevent side-motion. Now send, and see how your arm feels. Does it begin to tighten up, and do you begin to make errors?

Loosen the key. You may need a couple of sessions to convince you, if you are on the stubborn side, so there is no need to risk your arm while you decide. But the arm, and how it feels, tells the story. Stubborn or no, I know how that key adjustment will wind up! You will never send with a tight key again!

So much for the practice, now for the theory: Our grandparents used to explain any number of things as being the result of "nerves." The trouble with one word explanations is that they don't lay it out for you. In this case, though telegraphers and doctors alike knew perfectly well that Telegrapher's Paralysis was a nervous condition, only the more observing saw any connection between a tight key and a glass arm. And even *they* hadn't the least notion how such a connection might work.

The first clue came from the work of H. S. Black, of the Bell Telephone Labs, who invented negative feedback amplifiers in the thirties. To him the invention meant stable telephone repeaters, and high fidelity at less cost. But to physiologists, experimental psychologists, and other researchers into the living body and its operation, it offered an explanation that had been lacking before. When you put your hand out to touch something, how did the hand stop where you wanted it to? Feedback, by various paths, was a concept that fitted all the observed facts. It simplified explanations; it predicted results. The idea that something caused by the original action that opposed and controlled it was new and exciting.

I have two pocket calculators. One has a keyboard that clicks under finger pressure, like a typewriter key. The other keyboard has keys of the conductive plastic foam type. And be it ever so bounceless, I don't like it, because it feels just like stepping in a cow-clap. It is just mushy; the other keyboard lets my fingers know when to stop pressing, with a click that is felt as a vibration. Expecting this, I actually cracked the circuit board on which the mushy keys were mounted, trying to make them react as expected. I had to cement another board onto it to prevent breaking the printed connections.

Also, I worked for a time at a broadcasting station as a transmitter operator. The on-off buttons controlling the circuit breaker for the high voltage were of the industrial type. They were spring-loaded and all that, but had absolutely *no* follow at all. Everybody hated them – you couldn't tell anything by feel. They gave a disconcerting impression of *anticipating* you, as if they operated while you were only *thinking* about pushing them.

Ask any target shooter what a bad trigger pull will do to his scores.

The fact is that most of us are confused and uneasy when something doesn't "feel right." This applies to telegraph keys, too. The rigidity of the side-adjustment, the absence of side-play, dulls and reduces the feedback that monitors what flows out of our brain, down the arm to the fingers, and into the key. This is my theory. No one else has ever said that this is true, so far as I can find out – and I've tried! – if only because telegrapher's paralysis is as dead as its victims, for the most part. It is one of the rarest of diseases, *so far as telegraphing goes,* but it has other manifestations, and should, by all means, be understood.

We have to have feedback, lest the nerves rebel through confusion. I have seen a man

standing, back arched, face contorted, arm stiff, trying to telegraph by tapping. I didn't laugh. Telegraphing was part of his job, and for him it was torture. Of course, he could send like a streak with a bug. If you check the old ads, you will see that they claimed "ease" and "speed" as selling points. But bugs were and are very expensive – aside from a few broker operators, most sales were to telegraphers who had glass arms. They were as helpless without their bugs as a present day grammar school student without his pocket calculator.

Lyall Watson, in his book *Super Nature,* has some interesting things to say. He tells of experiments in 1946 in which Grey Walter and his colleagues used flashing lights during brain wave tests and their patients went into convulsions. Other workers have had similar results when the rate of flashing coincided with certain brain wave patterns. The most consistent seizures occurred when the brain waves themselves were made to trigger the light, something like a buzzer or multivibrator action. Under this arrangement, half of the patients had spasms. And they had no history of epilepsy! Watson also mentions a bicyclist who blacked out while riding down a lane with trees along its sides. When the sun was low enough, the flickering produced by riding past the line of trees was enough to cause blackout – not just once but several times. How many mysterious automobile accidents, do you suppose, are caused by something like this?

In 1927 I went to work for AT&T. I knew a little International Morse, not much, and I discovered that Morse was quite a lot different. It was faster, too, once you learned to read spaces between clicks instead of tone pulses.

There was a full telegraph department with a few printer circuits, but mostly hand-operated Morse. In the test room, where I worked, there were at least a dozen "test wires." These were simple Morse circuits with a sounder mounted high, well above the jack-fields, next to the carvings of "Nekkid Wimmen" which were standard decoration in those days. Now we got plastic strips. Down on the keyshelf in a clutter of switch-keys and cord-circuits and such, dwelt the telegraph keys. The clutter was not conducive to good sending, but we had men who could do it. For one thing, telephony was just something added to their Morse experience. They were operators; that is how they got their jobs. They learned how to operate a Wheatstone Bridge, and gain a repeater, and that was about it. The test wires were used for communication between offices.

In those days, a telephone route between cities was likely to have just one standard 40 wire line. Open wire, not cable. That meant 20 side circuits, ten phantoms, thirty phone circuits in all. The side circuits were all composited (a composite set was a low pass filter) and a telegraph wire – nearly always half-duplex – could be connected to each wire, giving forty telegraph wires, two way. That is where the name "and Telegraph" comes from. These did not carry public messages, by agreement with Western Union; they were all either leased wires, or test wires.

You had to be conscious of your own office call; when you heard it, you interrupted the circuit to "break" the distant operator. When you heard the wire close, you said "I" and listened to his first words. Invariably he wanted something simple, and, while he was telling you, you walked away and did the job, listening all the while. Then you came back a few seconds later and said OK. The most convenient system you ever saw; it took a lot of effort and determination for the High Brass to kill it. We liked it. Radio Traffic men are aiming at such operation with their "break-in."

I was just a kid then; my co-workers were 30 to 60 years old. The older men got bored when work was light and they weren't kidding me. Then they resorted to horseplay. A favorite gambit was to loosen the trunnions to the critical point so that when the key was touched, the lever would explode out of it like a mousetrap and the spring would be lost. The victim had to try sending with the switch-lever, by which the circuit was kept closed while idle. This is like telegraphing with a knife-switch, and he would swear loudly to the delight of the perpetrators.

As I say, I was young. This did not suit my sense of propriety. Besides, I had noticed that, even when in working condition, the adjustment was very sloppy. So to be helpful I would tighten them to what I thought was the "proper" adjustment. In other words, I was a wise guy, just as the kids are today, and for the same reason: ignorance.

My "adjustment" never lasted long, so one day I took a pair of gas-pliers and tightened all the lock nuts. And then it really hit the fan. Grown men running up and down and cursing and threatening mayhem and worse for the unspeakable scoundrel who not only messed up all the key adjustments but had the unutterable gall to LOCK them that way! I watched them searching behind the test-board and under the duplex tables and even up on the cable racks for the dastard, whoever he might be, while I was in plain sight and feeling a little exposed. I knew who it was, all right. It was me. I was dimly aware that I was being taught something, and with more tact and good humor than I deserved. Later I, too, put on a show of rage and incipient insanity when, as a chief, I had to make a point! You can't do it often, but it works, it works! The difficulty is in keeping your face straight.

I asked one of the older men, who had been patient with me, what it was all about. "Don't you know? Send on a key without side-play and you get a glass arm!"

My informant was one of the few, even in that office at that time, who knew what caused Telegrapher's Paralysis; he knew that it was due to bad key adjustment and "nerves," and that was as much as anyone knew. In the years since, I have asked questions at every opportunity and so far have had not one answer that means anything. I have puzzled over it for those same years, and the work of Norbert Weiner and others gave me my first clue. It is entirely possible that I am the only man alive who actually does know; I hope not, and would be delighted to hear from anyone else who does. But I am afraid that, until now, I have been a torch bearer.

This story will undoubtedly be classified under Dewey Decimal System in some library or other, and will still be obscure. However, it will be in print, and not locked up in the heads of dead men. The knowledge, aside from help to key men, might even furnish an important clue to the psychologists and other workers in the field.

Be that as it may, you have no excuse for acquiring a glass arm. You know better. ■

Bob Lloyd WB9LTA
5820 N. Rural St.
Indianapolis IN 46220

Mobile Autodialer

-- six preprogrammed numbers

Most of us seem to dial 4 or 5 numbers most often when using autopatch. And it always seems you decide to make that important call when you're up to your ... ah ... bumper ... in traffic. This situation, and a near miss on the expressway, is why I felt the need for the WB9LTA autodialer — and, of course, the never ending "need" for a new gimmick.

The features of this autodialer are: rapid, error-free dialing of any one of 6 preprogrammed phone numbers; automatic transmitter keying; simple operation — set the rotary switch and push the activation button; optional keyboard for unprogrammed numbers; optional acoustic coupling; and rock stable touchtone generator, requiring no tuning.

The heart of the autodialer is a new McMos® chip from Motorola, the MC14410P. This is a 2 of 8 tone encoder, specifically designed for touchtone applications. It uses a 1 MHz crystal divided internally to generate the basic tones. It is accurate to ±½%, well within the specs required to key Bell TT

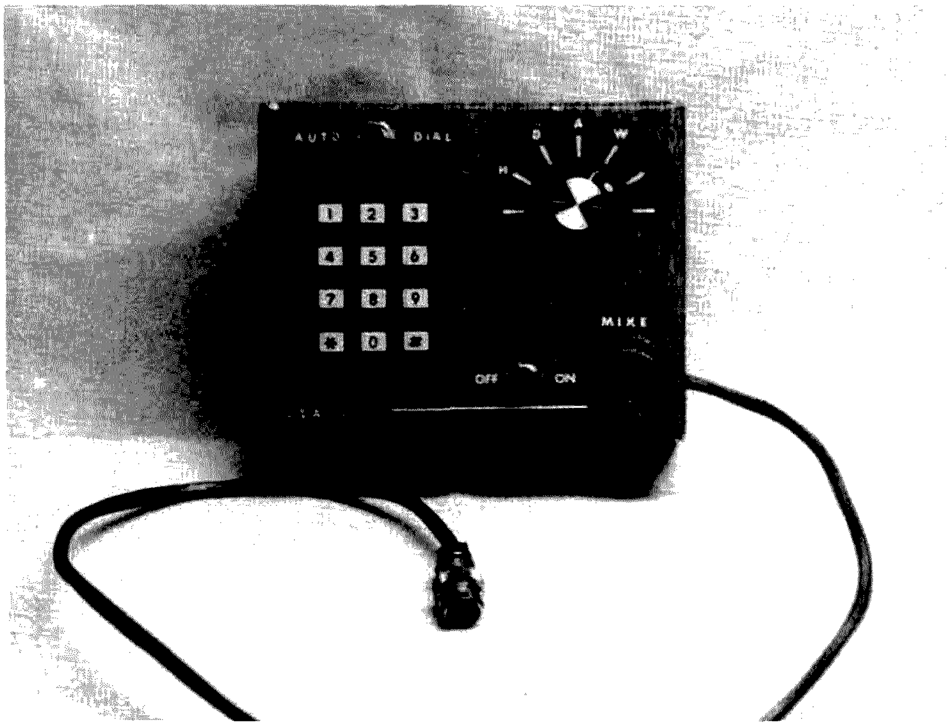

Front panel; PC board, top view.

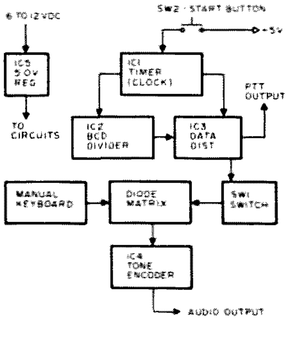

Fig. 1. Block diagram.

circuits. To achieve the sequential dialing necessary to dial a phone number, a 1 of 16 data distributor stepped by a BCD decimal counter was chosen. A NE555 timer was chosen to provide the clocking for the circuit.

The only really critical parts of the circuit are the tone frequencies, which are controlled by the MC14410 and the crystal; the digit pulsing rate, which is controlled by the 555 and R2; and the interdigit time, which is controlled by the programming of the outputs of the 74154. A note regarding the digit and interdigit timing: Bell specs call for a 75 msec tone pulse, separated by a 25 msec interdigit space (worst case specs), to reliably access Bell equipment. Some offices may respond to faster pulsing, but not all will. This circuit is designed to fit these specs, with some "security hedge" built in.

How It Works

First, a word of explanation: I am not an engineer. I look on ICs as "little black boxes." I don't understand how many of them work, or what's in them. All I care about is what can be done with them, and how to wire them together to make them do the job you want done. Don Lancaster's book, "The TTL Cookbook," has been a great help here. But just plain "trial and error" has been my best teacher. With that, here goes an explanation of how this device works (refer to Fig. 1).

When you push the start button, IC1 starts. IC1 is wired as an astable multivibrator, with the frequency controlled by R2 and C2. The output of IC1 is fed to IC2. IC2 is a decimal divider which puts out a BCD sequencing code at the rate dictated by IC1. The BCD outputs of IC2 are applied to the inputs of IC3, a 1 of 16 data distributor. The outputs of IC3 will be brought to logic 0, one at a time, then will go back to logic 1. The rate at which this happens is controlled by the clock (IC1). Which outputs change is controlled by IC2. The outputs of IC3 are routed through switch 1 to control which digit tones are applied to the audio output at any given time. Note that only every other output of IC3 is used; this provides for the interdigit timing (which is equal to the digit timing). Switch 1 is the programming device. It controls the sequence in which the numbers are dialed, and which numbers are dialed. The diodes on the inputs of IC4 and the outputs of IC3 connect (by jumpers) to switch 1, and form the programming matrix. IC4 is the tone generator. It has seven inputs, which correspond to the seven basic touchtones. When a low tone input and a high tone input are brought to ground simultaneously, a TT digit is generated. See Table 1 for which inputs generate which digits.

The high group and low group outputs are combined through isolating resistors to give the digit output. The digit output is coupled to the rig through the coupling cap, C7. R6 controls the output level. If acoustic coupling is desired, the optional amplifier consisting of Q2 and Q3 is used, and is direct fed from the level control pot (R6). C7 is not used in this application.

PTT control is achieved by applying the pulse at IC3, pin 16 to the base of switching transistor Q1. The collector of Q1 provides a ground path to activate the PTT circuit in most rigs when Q1 is biased on. If your rig uses a positive voltage, or diode switching to activate the PTT, then you will have to use the optional circuit shown.

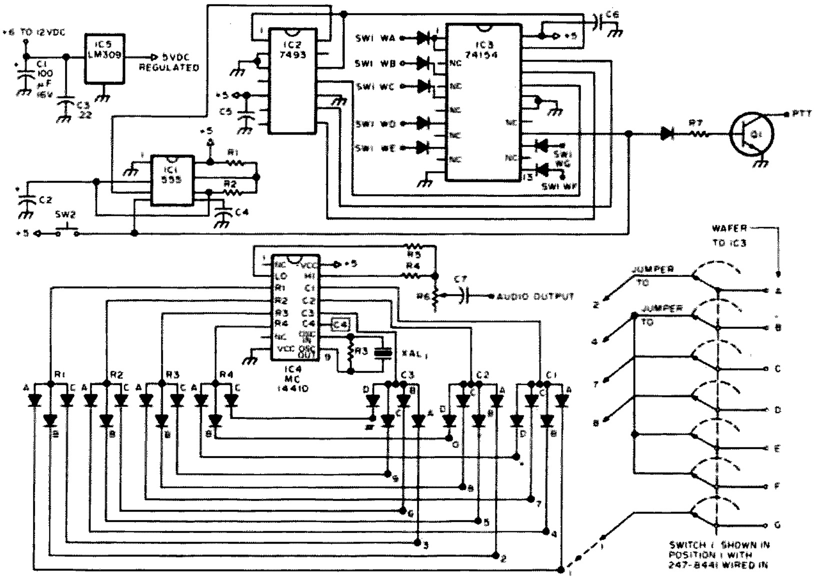

Fig. 2. Schematic.

Construction

Parts procurement may be a problem in some cases, especially in obtaining IC4, its associated crystal and SW1. Sources for these parts are provided in the parts list. The optional tone pad is also a problem, and again, sources are in the parts list.

A PC board is the most desirable way to build this project, and a layout is provided. Etched boards are also available. A vectorboard could be used, but the number of diodes in the matrix may make the final device unreliable unless you epoxy the diodes to avoid movement.

Assembly is straightforward, with no special precautions needed except in handling IC4. Since it is a CMOS device, it is subject to damage from static electricity. Do not remove it from its carrier until you are ready to insert it into the circuit. At that time, you should run a strap from your wrist to an earth ground, to bleed off any static buildup on your hand. DO NOT touch anything electrical in your shack while you are grounded. If you work on a wood, concrete, or tile floor and wear rubbersoled shoes and cotton clothes, static buildup is unlikely, and you needn't ground yourself.

Wiring the jumpers in the diode matrix requires some care, to be sure the correct digit tones will be generated. Refer to Table 2 for these connections.

To simplify construction, program the individual phone

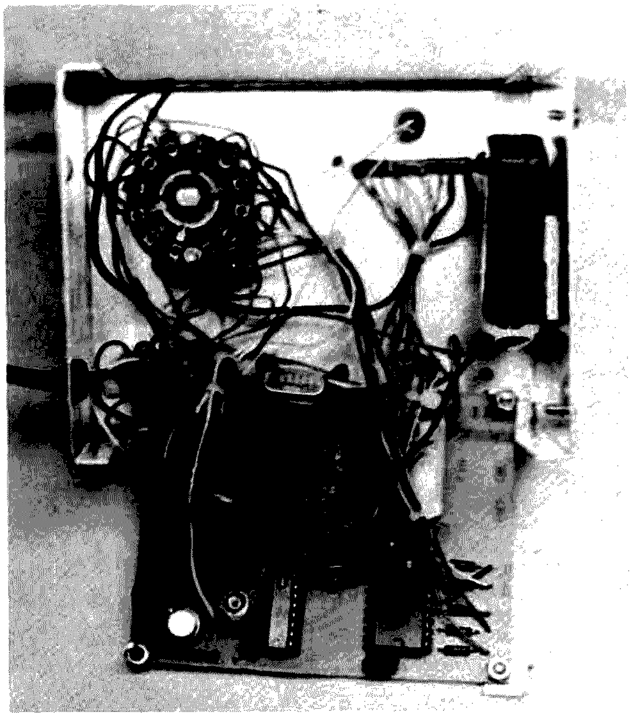

PC board, bottom view; internal wiring view.

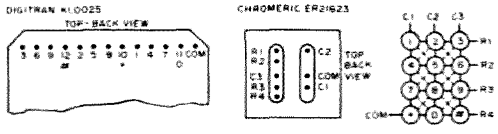

Fig. 3. Keyboard connections.

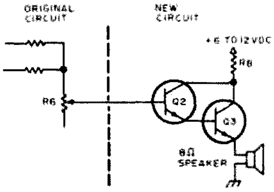

Fig. 4. Optional audio amp.

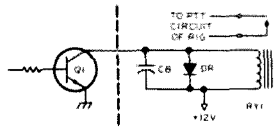

Fig. 5. Optional PTT methods.

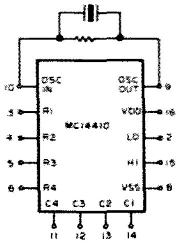

Digit	R input	C input	
1	R1	C1	Standard TT digits
2	R1	C2	
3	R1	C3	
4	R2	C1	
5	R2	C2	
6	R2	C3	
7	R3	C1	
8	R3	C2	
9	R3	C3	
*	R4	C1	
0	R4	C2	
#	R4	C3	
A	R1	C4	Special control digits
B	R2	C4	
C	R3	C4	
D	R4	C4	

Table 1. MC14410 Digit Connections.

Jumper from Diode	to	Diode	for	Digit Output	to Switch 1
R1-A		C1-A		1	
R1-B		C2-A		2	
R1-C		C3-A		3	
R2-A		C1-B		4	
R2-B		C2-B		5	
R2-C		C3-B		6	
R3-A		C1-C		7	
R3-B		C2-C		8	
R3-C		C3-C		9	
R4-A		C1-D		*	
R4-B		C2-D		0	
R4-C		C3-D		#	

Table 2. Diode Matrix Jumpering.

numbers on switch 1 before wiring the jumpers from IC3 and from the diode matrix to it. When programming SW1, avoid confusion by labeling the various wafers of the switch with A through G. "A" corresponds to the first digit of the phone number and to the point on the diode matrix to which it will be attached. "B" corresponds to the second, etc. The wiper for wafer "A" will connect to diode "A" on the board, etc. Position 1 on each wafer will be used to program the first phone number, position 2, the second, and so on. Refer to Table 3 for an example of programming. Note that any digit is only brought from the diode matrix to the switch once. Whenever that digit is needed in programming again, simply jumper it from another point on the switch which represents the same digit. In the example shown in Table 3, the digit "4" was brought to switch 1, wafer B, position 1 from the diode matrix. Then jumpers were used from wafer B, position 1 to wafer E, position 1, and from wafer E, position 1 to wafer F, position 1 to wafer G, position 2.

After the phone numbers are programmed on the switch, then bring the jumpers from the diode matrix to the necessary digit and wiper points on SW1. Now, recheck the programming for errors. Trace from the R positions on IC4 to the C positions to verify the correct tones as shown in Table 2, then trace the wiring through SW1 to verify that the correct phone numbers exist in each position. This should complete the switch programming.

If a keyboard is used, jumper from each digit on the diode matrix to the correct pin on the keyboard, referring to Fig. 3 for the pinout on the specified keyboard. Other keyboards may be used, but they should provide a common contact on each digit, and an isolated contact for each digit. A multiplexed board will work, but it still must have a common contact for ground in each digit. A 16 digit keyboard may be used, but diodes are not included in the matrix, and would have to be added.

It is suggested that sockets or molex type pins be used on all ICs. Also, use a good grade capacitor for C1 and C2, and a 5% resistor for R2, 4, and 5. Other part values are not critical.

Testing

Prior to testing, double-check all wiring — ICs are great till you apply voltage to the wrong point! Also recheck the PC board for hairline trace bridges, or solder bridges; I had 3 solder bridges on my prototype.

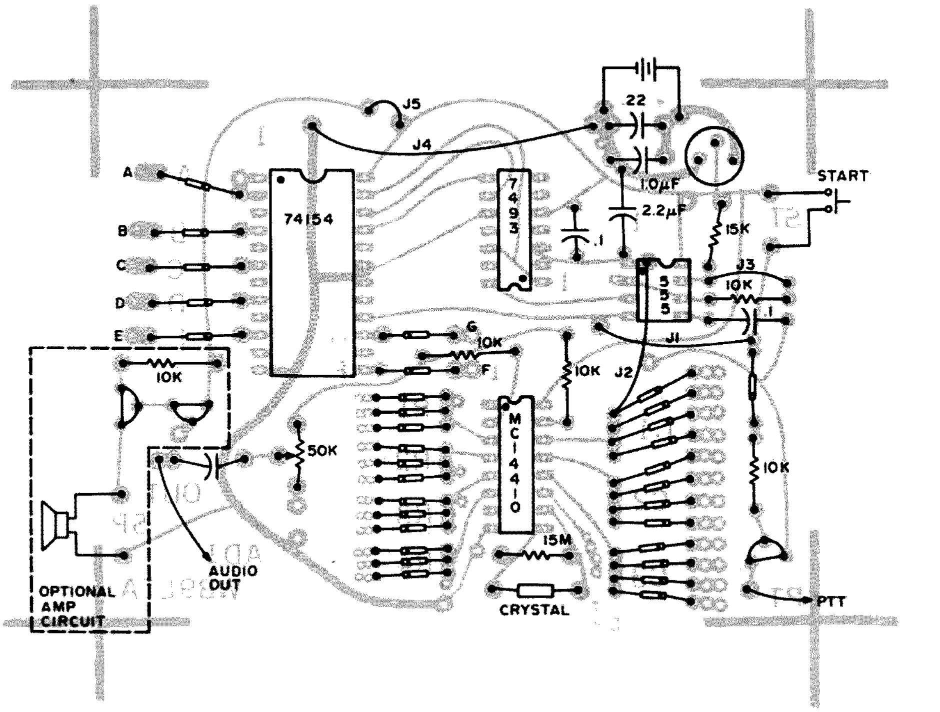

Fig. 6. Component layout (full size).

Once satisfied with the wiring, apply voltage, using a 9 volt transistor battery or a 12 volt power supply. Attach a voltmeter to the output of the LM309H and check for 4.5 – 5.5 V dc. If voltage is above or below these limits, remove power and recheck wiring; if the voltage was more than 1 volt above the 5.5 volt level, you may have damaged one or more of the chips. If the voltage was too low, check the LED, then the chips. Of course, don't overlook the LM309H. If it was inserted incorrectly, it will probably be damaged. One other word of caution: NOTE that the 7493 is inserted with pin 1 down toward the MC14410, just opposite of the rest of the chips.

Assuming that the voltages are OK, the next step is to check the tones. I used a small transistor amplifier, connected to the output capacitor, to listen to the tones. When you push the start button, you should hear a burst of tones. If not, you may have a wiring error, or poor connection. Next, test the tone chip by attaching a jumper to ground, then touching the unattached clip to each of the R and C pins on IC4. If you get tones, next touch the clip to the TT digit output (the outputs that go to SW1). Again, you should hear tones. One way to verify the accuracy of the tones is to use a touchtone phone. Listen in the earpiece while pressing the same digit on the telephone and the autodialer – you should hear a beat effect, which tells you that the two are close.

If all of this testing proves the unit is working, you should check the PTT transistor Q1. Clip an ohmmeter between ground and the collector: When the start button is pushed, the ohmmeter should show a low resistance reading (10-60 Ohms). If all of this works, your autodialer should work. Attach it to your rig and try it!

If the unit does not give a tone burst when the start button is pushed, but the tone generator is working, the problem most likely is in the 555. Recheck the wiring around it, and the timing components, C2 and R2. If a scope is available, check pin 3 for an output pulse. I have encountered a few defective 555s obtained surplus, so this may be a consideration.

If the unit dials too fast or too slow, C2 or R2 are of incorrect value. Cheap capaci-

	Phone # Digit	SW1 Wafer	SW1 Position	Digit Output	Point in matrix where jumper should come from	or	Point on SW1 where jumper should come from
First Phone Number	2	A	1	2	Diode C1-A		
	4	B	1	4	Diode C1-B		
	7	C	1	7	Diode C1-C		
	8	D	1	8	Diode C2-C		
	4	E	1	4			SW1 Wafer B Pos 1
	4	F	1	4			SW1 Wafer E Pos 1
	1	G	1	1	Diode C1-A		
Second Phone Number	5	A	2	5	C2-B		
	5	B	2	5			SW1 Wafer A pos 2
	5	C	2	5			SW1 Wafer B Pos 2
	1	D	2	1			SW1 Wafer G Pos 1
	2	E	2	2			SW1 Wafer A Pos 1
	3	F	2	3	C3-A		
	4	G	2	4			SW1 Wafer F Pos 1
Third Phone Number	2	A	3	2			SW1 Wafer E Pos 2
	2	B	3	2			SW1 Wafer A Pos 3
	2	C	3	2			SW1 Wafer B Pos 3
	2	D	3	2			SW1 Wafer C Pos 3
	3	E	3	3			SW1 Wafer F Pos 2
	6	F	3	6	C3-B		
	9	G	3	9	C3-C		

Other phone numbers would follow this pattern.

Table 3. Example of SW1 Wiring.

tors are rarely close to the stated value, so if you bought an inexpensive unit, that may be your problem.

One helpful test fact: The current draw of this circuit is about 100 mA. If trouble occurs, this would be an important thing to check. Higher current indicates a potential short (probably on the board), while lower current indicates a potential open (probably a poor solder joint).

The final item to check is the numbers your autodialer is dialing. If it dials an incorrect number, you've made a mistake in your switch programming.

Operation

Operation is simple: Apply the power, select the number to be dialed with SW1, and push the start button. Presto, you have your party!

A few notes are in order. When power is applied to the unit, the dialer will sequence, then stop, so avoid turning the unit on where it might interfere with a QSO. If you choose a 9 volt transistor battery as your power source, use a mercury or nicad cell, as an alkaline or carbon-zinc cell will cease to operate in extremely low or high temperature. The best source of power is your car battery. If your dialer malfunctions, it is most likely the power supply. If you get unreliable dialing, the problem is probably one of excessive speed. Adjust R2 upward in value. If the audio output is too low, it may be necessary to adjust the value of R4 and R5. Do not go below 1k Ohm for these resistors, however. If you still don't have enough audio to drive your rig, you may need to add the optional amplifier. Another problem area was recently brought to my attention: Some rigs are using audio circuits which provide base attenuation. In these circuits, it may be necessary to juggle the values of R4 and R5, maybe such as 1.5k for R5 and 1.0k for R4. DO NOT juggle these values unless you find (with a scope) that the high and low tone groups are more than 4 dB apart in level.

Finally, select an enclosure for your autodialer. I used a 3 x 4 x 5 inch minibox because it is inexpensive. I covered it with contact paper, then marked it with Datak dri-transfers. You may wish to go with a more deluxe enclosure, such as a LMB442 or a sloped panel box. I do recommend a metal enclosure.

Hookup to your rig may be accomplished any number of ways. In my unit, I used a jack identical to that used on my TR-22, mounted on the front panel of my autodialer. I attached a short length of 3 conductor cable from the common, audio-output, and PTT outputs of the autodialer, to a plug to match the jack. I then plugged my mike into the autodialer, and plugged the autodialer into my rig. You could put an accessory plug (some rigs already have one) on the back, and feed the PTT, common, and audio to the rig this way.

I would like to give credit to K9OMS, who spurred this idea by building an autodialer some time ago, proving to me that the basic idea was sound. I would also like to thank WB9SFF, WB9PAR and K9JRI for their technical assistance in developing the final product. Finally, the XYL deserves a lot of praise for her tolerance of my time spent in the shack working on this project. ■

Parts List

Quantity	Designation	Description	Source
1	IC1	NE555	Digi-key, James, Poly Paks, etc.
1	IC2	SN7493	Digi-key, James, Poly Paks, etc.
1	IC3	SN74154	Digi-key, James, Poly Paks, etc.
1	IC4	MC14410	Data Signal Co.
1	IC5	LM309H	Digi-key, James, Poly Paks, etc.
1	Q1	2N3904	Digi-key, James, Poly Paks, etc.
32	Diodes	1N914 or equiv.	Digi-key, James, Poly Paks, etc.
1	C1	100 uF/16 V dc	Digi-key, James, Poly Paks, etc.
1	C3	0.22 uF Mylar	Digi-key, James, Poly Paks, etc.
1	C2	2.2 uF/16 V dc	Digi-key, James, Poly Paks, etc.
1	C7	1.0 uF non-polarized	Sprague 225P10591YD3
3	C4, 5, 6	0.1 uF disc	Various
4	R1, 4, 5, 7	10k Ohm ¼ W 5%	Various
1	R2	15k Ohm ¼ W 5%	Various
1	R3	15 M Ohm ¼ W 5%	Various
1	SW1	7 pole 5 (or more) position rotary switch	Centralab PA 1027
1	SW2	N.O. momentary contact push-button switch	Various
1	XAL1	1 MHz ±0.1% 7.0 pF 540Ω crystal	Manann Labs ML 18P
1	R6	50k Ohm lin. taper trimpot	Mallory MTC 54L1
Optional Parts			
2	Q2, 3	2N3904	Various
1	R8	1k Ohm ¼ W 5%	Various
1	RY1	SPST N.O. relay	Magnecraft W 102 MPCX-8
1	DR	1N4001 diode	Various
1	C8	0.1 uF disc	Various
1	SW3	SPDT power switch	JBT #JMT 123
1	KB	TT keyboard	Digitran KL 0025 or Chromeric ER 21623

Kits Available

AD1	Complete Kit — All parts, PC board (drilled) and AD4B switch. Less case and battery	$65.00 pp
	For AD4A switch, add	4.00 pp
AD2	Chip Kit — MC14410, 7493, 74154, 555, LM309K 1-2N3904, 1 MHz crystal	30.00 pp
AD4A	Switch 1 — 7 pole 9 position rotary switch	10.00 pp
AD4B	Switch 1 — 7 pole 5 position rotary switch	6.00 pp
AD4C	Switch 1 — 7 pole 3 position rotary switch	2.00 pp
AD5A	PC board, etched and drilled	6.00 pp
AD6A	Enclosure, regular	4.00 pp
AD6B	Enclosure, deluxe	10.00 pp

Optional parts not available from kit source.

Kits may be ordered from: L & S Enterprises, 5820 N. Rural St., Indianapolis, Indiana 46220

Autocall '76

--using a touchtone decoder

C. W. Andreasen WA6JMM
PO Box 8306
Van Nuys CA 91406

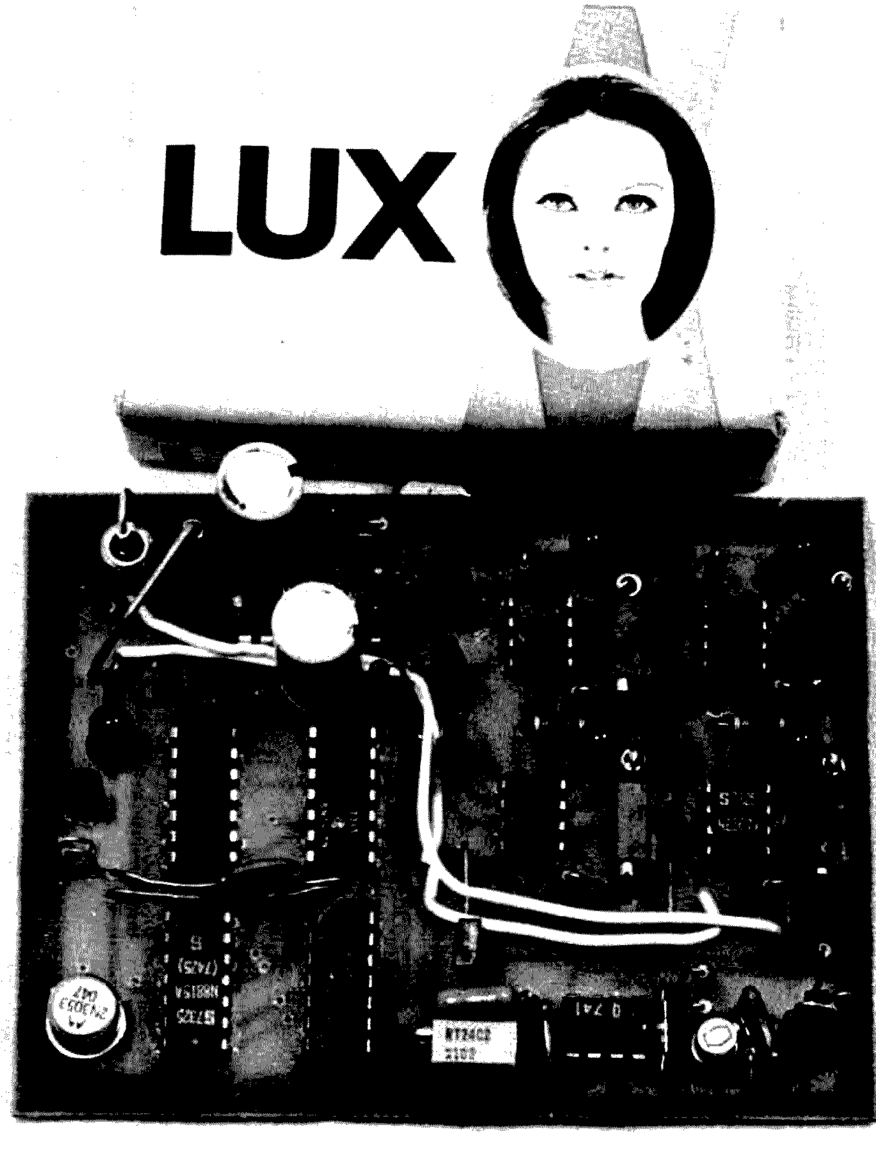

The purpose of this circuit is to allow the user to monitor a radio channel without having to listen to constant chatter, and yet be available for call. This unit may be used with any radio, and will work on any simplex or repeater channel the radio is tuned to. The circuit uses no special hard to get coils, or other rare parts, and is easy to tune and set up. As shown, the unit will respond to a three digit Touchtone code, but with minor changes the unit can be made to respond to any number of digits.

When the operator wishes to use the device, the audio input plug is inserted into the external speaker jack provided on most radios. The unit will monitor the channel for the programmed series of Touchtone numbers in the proper order, during a predetermined "window" of

The Touchtone sequence decoder. A zener diode and resistor may be used in place of LM309. Zener type 1N751 and resistor value of 68Ω, 2 Watts are suggested. Undrilled PC boards are available from the author for \$3.50 each.

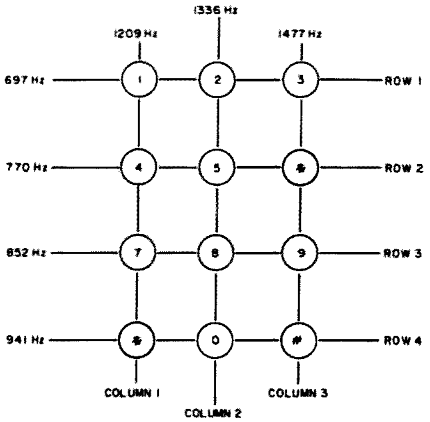

Fig. 1. Touchtone pad frequencies.

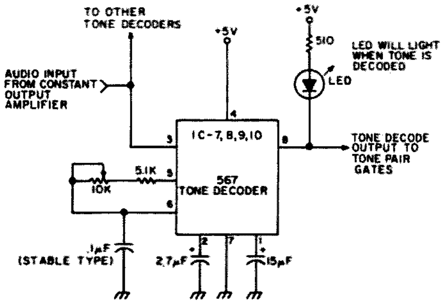

Fig. 3. Tone decoder using 567. Circuit repeated four times.

time (all three digits must be received during a measured time period). When the proper three digit code is detected, a latch will set, enabling a light which shows that the unit has been paged, and also enables a transistor which can key a buzzer, fire a cannon, or even key a relay turning on a speaker letting you hear the channel and your call. This key will time out after five to ten seconds, depending on values used, while the light will remain lit until reset manually.

Circuit Description

The audio goes into a constant output amplifier (Fig. 2). This amplifier will provide a constant output level to the tone encoders even though the input level may vary over a range of 50 mV to more than 6 volts. This constant level audio is distributed to four 567 tone decoders (more could be added). Each tone decoder is tuned to detect one tone in the Touchtone matrix, which has seven tones, of which we only use four. Under normal conditions, two decoders would be tuned to the columns, and two to the rows (refer to Fig. 1). The output of each decoder is fed into gating (IC1) where the tone pairs are determined. The output of each tone pair gate is a digit decode (example, column 1 and row 1 = digit 1). These four decoded numbers go both to the sequence logic and an "OR" gate which triggers a oneshot (Fig. 4). This oneshot will trigger any time a number is decoded, and will enable the sequence logic for a time period, forming a window, which resets the logic when time-out occurs.

The sequence logic is simply three flip flops which can be set only in the wired, predetermined order. This may be wired by using three of the four decoded numbers connected to the proper gate in the desired order. An example would be: if I decode columns 1 and 3, and rows 1 and 4, my four decoded tone pairs, or digits, would be 1,3,*, and #. If I were to wire the decoded number 1 to pin 9 of IC2, the decoded number 3 to pin 9 of IC3, and the decoded symbol

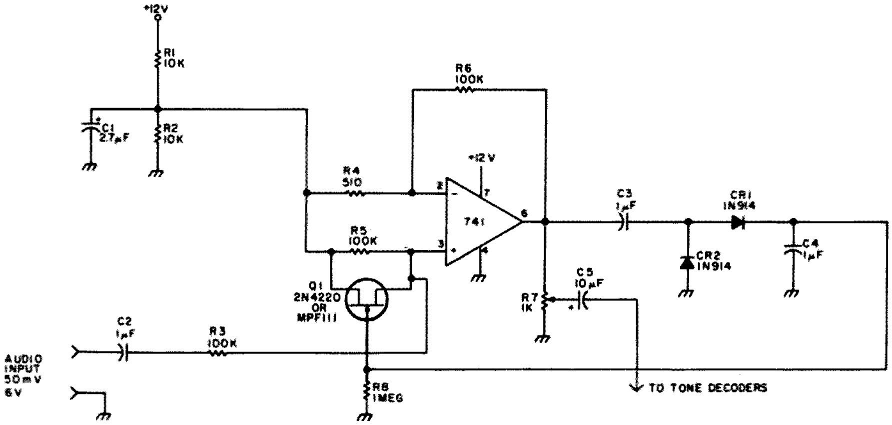

Fig. 2. Constant level audio amplifier.

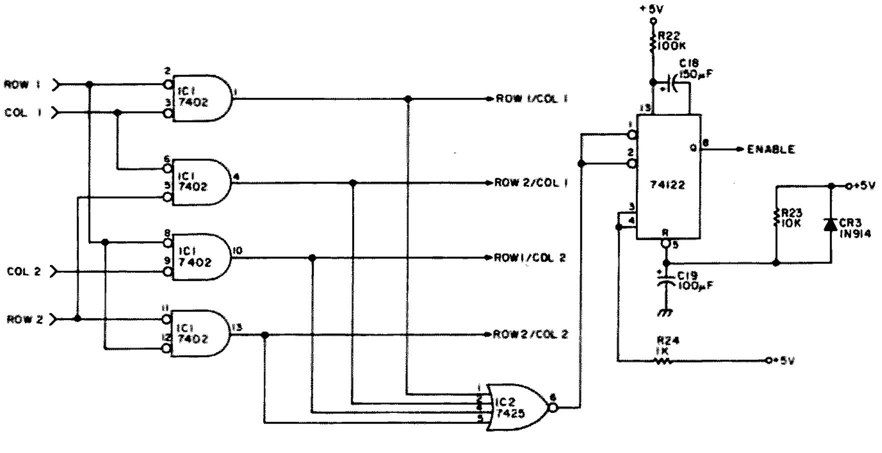

Fig. 4. Tone pair decode, window enable.

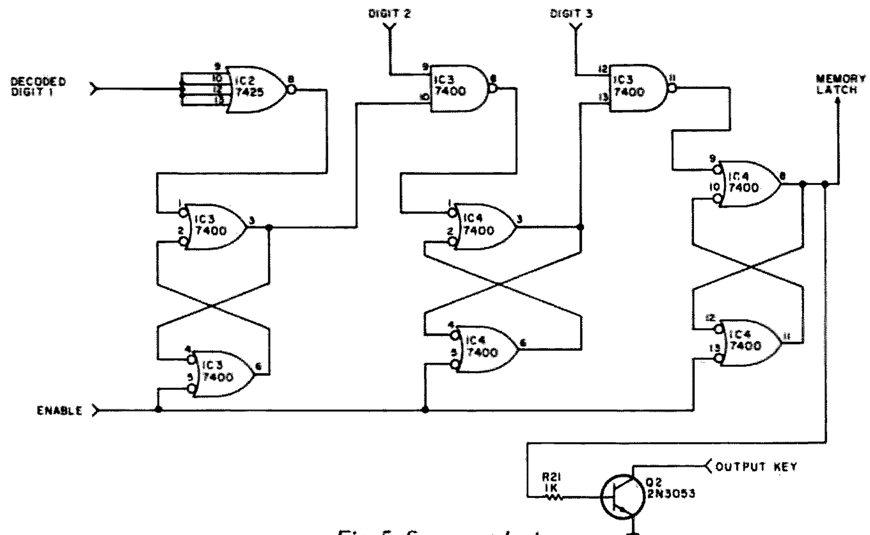

Fig. 5. Sequence logic.

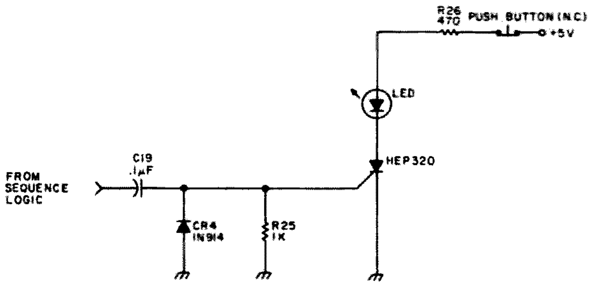

Fig. 6. Memory latch.

to pin 12 of IC3 (Fig. 5), my unit would respond to the call of 1-3-#. As you can see, the fourth decoded digit is not used. If the builder wishes to expand his call to four digits, this can be done by the addition of another flip flop and gate wired onto the end of the sequence logic chain.

When the proper code is received, the memory latch (Fig. 6) will set, until reset by the user, and the output key will turn on for a period of time which will end when the window times out and the unit resets, in about five seconds with the values shown.

Tuning

To set the tone decoders for the desired decode, connect the input of the sequence decoder to a Touchtone signal source. After adjusting R7, the output of the constant level amplifier, so as to drive the tone decoders with about 100 mV of audio, pick the first column to be decoded and generate this tone (if using a Touchtone pad, hold two keys in desired column simultaneously, and this will provide the tone for that column; the same holds true for the rows). Adjust the tuning resistor on the 567 tone decoder desired, until the LED in its output lights. Move to another 567 decoder and repeat this same procedure with the second column, and then repeat again for each row. With the outputs of the tone decoders wired to the pair gates as shown, each of the four gates will have a HIGH output corresponding to its tone pair input. The unit is now set up to recognize four tone pairs, of which the order of recognition is determined by the wired order to the sequence logic.

The unit built by the author has been in use for some time and is constantly connected to the audio output of the receiver. The unit has proved to be stable and reliable, decoding the tones even while the incoming signal is noisy or the person sending is talking on top of the tones. My unit has *never* falsely gone off due to voice or noise on the channel. ■

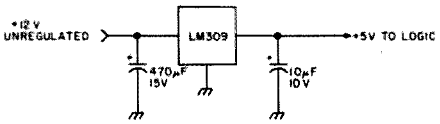

Fig. 7. Power supply regulator.

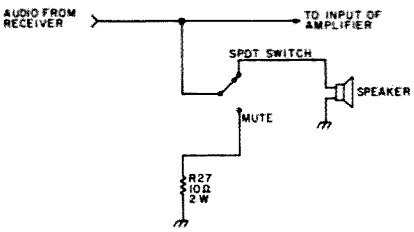

Fig. 8. Speaker muting switch.

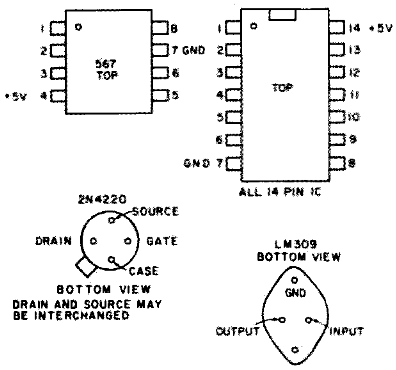

Fig. 9. Semiconductor pin arrangements.

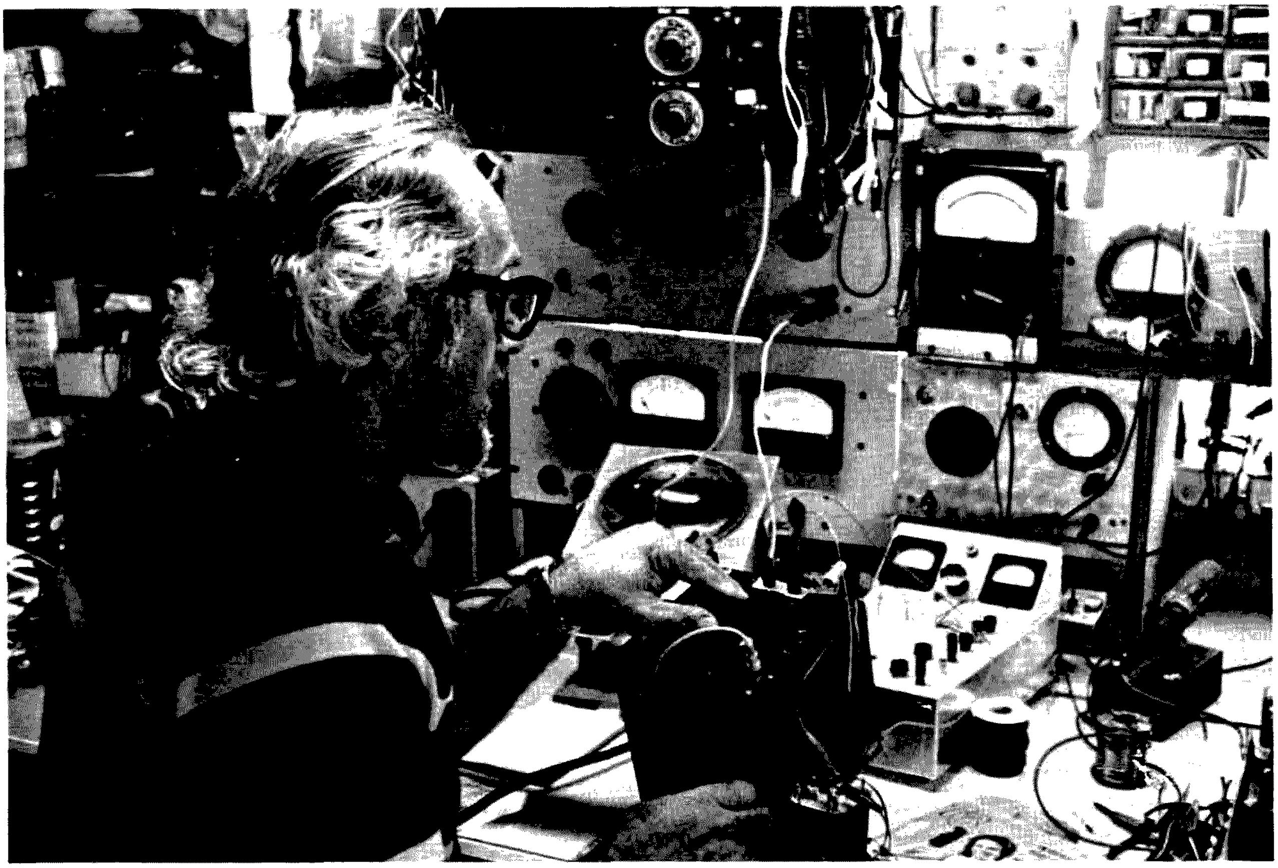

Build This Lab Type Bridge

-- and measure transformer impedances

Arny Cain WB4FDQ
2306 So. Ruffner Rd.
Melbourne FL 32901

Hold it! Don't let the title scare you away. This is not an article written strictly for engineer types, but just the opposite. Considering the fact that I have been playing with electronics (we used to call it just plain radio) since 1933 and only just discovered Ohm's Law about eight years ago, you may understand that I am far from academic-minded. As a matter of fact, I was never graduated from high school and only got a college degree in 1973, but that is another story. Truth to tell, I have always been one of that vast army of cut and try chaps who are scared silly at anything that even remotely resembles an algebraic formula. This is also the reason, indirectly, that I built this valuable tool and worked out my own cut and try method of solving a nagging, typical ham problem.

It all started back in the mid-60's when I was building the modulator for a two meter rig. I needed a transformer of a specific input and output impedance, in Ohms of course. Since I had (and still have) about a hundred transformers (all unmarked, of course) lying around, and since at that period of history I was working at the Space Center at Cape Canaveral, it

was no trick at all to take a few likely-looking prospects into one of the many electronic labs. Telling my problem to a group of sympathetic, highly trained, and highly paid engineers brought instant cooperation. Unfortunately, sophisticated labs not withstanding, several hours later we still did not know the impedance of any of the transformers. Greatly disappointed, I gathered up my "boat anchors" and decided that there must be an easier way. I finally bought the proper modulation transformer and got the rig on the air, but in the back of my mind the determination to find an easy way out of this dilemma remained.

Well guys, after an interval of about ten years, here is the simple solution. Three pieces of equipment are needed, two of which you probably have. The first is a signal source at about a thousand cycles (you can use sixty cycles in a pinch), since I understand that most audio transformers are measured at this frequency. The source should have an output of about five to ten volts, although it can be less if you use a sensitive oscilloscope for the null detector, which is the next piece of gear that you need. You can use a VTVM, a scope, a simple old 6E5 magic eye null detector, or (if you have enough signal) an ac micro-ammeter (not recommended). The third and last thing that you will need is (the reason for this article) an instrument improperly called a Wheatstone Bridge.

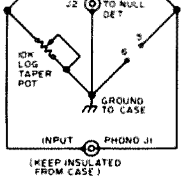

Fig. 1. Schematic.

Please don't rush for your pen to defend old Sir Charles Wheatstone. I'm not trying to deprive him of his place in history, but the fact is that he just didn't invent the darn thing. True, he publicized it, but the device was invented by an English scientist named Samuel H. Christie in 1833. At any rate, this simple piece of gear is the solution (I'll explain how I used it to beat the unknown transformer problem in a moment) to not only the above problem, but to so many others on the workbench that I now wonder how I ever survived in this hobby without it. Considering its simplicity (see schematic), it is perhaps the most valuable instrument that I own.

Now for the construction data, which will be meager because no one will build a carbon copy anyway. First, don't use a standard volume control for your calibrated pot. They are just too small to permit any degree of accuracy and/or resettability. As you will observe in the photos, the potentiometer that I used is a 5½" diameter, wire wound, 10k Ohm log taper job made by the Muter Company and, I believe, long since discontinued. I've had mine for about 6 or 8 years and I think that I bought it by mail from one of the surplus houses that advertise in *73*. I do remember that I paid $3.95 for it and it's probably worth ten times that. You don't have to have one that big, but try to get a pot over two inches in diameter.

Wire with heavy leads, the heavier the better (I used number 14 wire), and make sure that you use well-insulated binding posts. One more thing, before I forget: Be sure that your signal input connector is well insulated from the chassis. As you can see in the photos, my plug-in

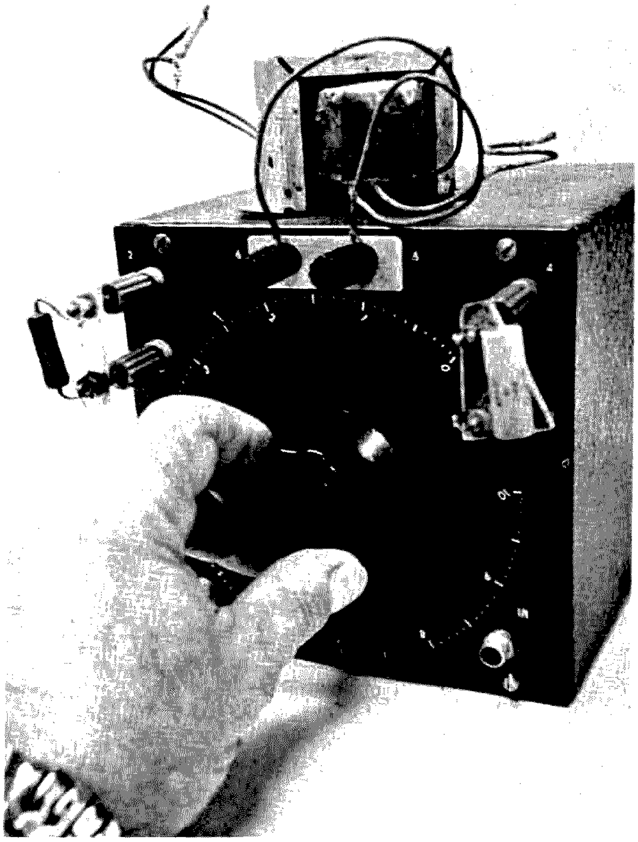

Connect unknown resistor between 5 & 6

Range (Ohms)	Posts 1 & 2 Std. Res.	Posts 3 & 4 Std. Res.
.1 – 1	10,000	1
0.1 – 10	10,000	10
1 – 100	10,000	100
10 – 1000	10,000	1000
100 – 10,000	10,000	10,000
1000 – 1000,000	1000	10,000
10,000 – 1 Meg	100	10,000

Table 1. Resistance Measurements.

resistor jacks are made using banana plugs on pieces of Lucite. The reason for the funny shape (the Lucite) is that I had a bunch of three prong connectors from a long since defunct grid dipper. All I had to do was to remove one banana plug; ergo, funny looking jacks. The only other components that you will need are some precision resistors and capacitors, preferably 1% (see list). The accuracy of the instrument depends on two things: the precision with which you calibrate your dial, and the accuracy of the standard resistors and capacitors that you use.

I made my dial six inches in diameter using a large skirt knob and a flange from a daylight load spool from 16mm movie film. I filed a flat on the shaft of the pot so that the dial would never slip and would retain its calibration if it should ever have to be removed. After the instrument was assembled I sat down with a handful of precision resistors and my VOM

to calibrate. I hooked my ohmmeter across terminals #1 and #6 and marked the dial carefully with a pencil, checking every reading against a known 1% precision resistor wherever possible. Later I applied white press-on numbers and dots and sprayed them with clear lacquer to protect them. The calibration procedure is not difficult, just tedious. Calibrate the major 1k Ohm points first and then the 100 or 200 points in between. The more careful you are, the more accurate your bridge will be.

As you will note in the photographs, I used standard RCA phono jacks for input and output. I use them whenever possible on my projects because of the wide variety of shielded cables available that match them. The case is 6"x6"x6", formerly black crackle finished, salvaged from my junk box (the whole garage), and resprayed red to cover the chips and rust spots.

Just one more thing on construction before we get to the good part. If I were to rebuild mine I would space my banana plug posts a standard ¾" apart; that way I could use standard dual banana jack instrument plugs. It doesn't affect anything; it's just a matter of looks. My Lucite plugs look rotten and it bugs me.

After I had completed the bridge I spent a couple of hours playing with it. I found it difficult to believe that such a simple device really worked so well. Finally I picked up an audio transformer with known impedances, and hooking one winding across the bridge and the output of my audio oscillator (set at 1 kHz) to the input, I adjusted the scope for a nice one inch trace. Try as I might, I could not get a reading anywhere near the impedance marked (in this case 10k Ohms). It suddenly occurred to me that the other winding should be loaded to its proper impedance in order to get an accurate reading on the winding under test. I quickly hooked up a four Ohm resistor to the output winding and, lo and behold, measured 10k Ohms on the primary. I then got myself a cup of coffee and sat down to do a little skull work.

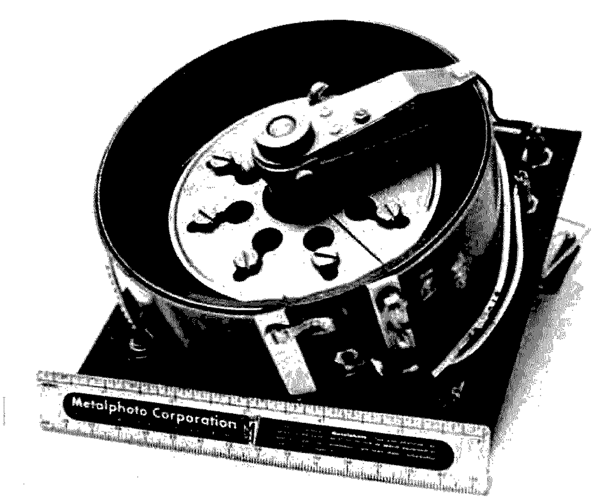

As I sat sipping and pondering, it suddenly occurred to me that since four Ohms is a pretty low resistance, what would happen to the impedance of the other winding if I were to short the four Ohm winding? To think is to act, and I now measured approximately 1800 Ohms across the primary. Could it be that shorting the low impedance winding gives you a reading of about one fifth of the true impedance? Subsequent tests with other transformers show that, although this is not one hundred percent accurate, as a general rule of thumb you might use this as a ball park figure to start. Here is the procedure that I finally worked out.

Start by measuring the dc resistance of all windings with an ohmmeter (or with the bridge using the described procedure for dc resistance measurements) and marking them. If you are sure that it is an output transformer, hook a 4 or 5 Ohm resistor across the lowest resistance output winding. Connect the high resistance winding across the #5 and #6 terminals of the bridge, a 1 kHz signal to the input, and a suitable detector to the output. Measure the resistance and hook a carbon resistor of *this* value across the winding you have just measured. Reverse the transformer and measure the previously shunted low impedance winding. If it was an output transformer and you had used the 4-5 Ohm shunt, you will probably find that you are within 5-7% of the true value of the transformer. Close enough for all practical purposes.

If you are not sure of the type of transformer you are working with, proceed as follows. Short the leads of the lowest resistance winding together and connect the highest resistance winding across the bridge. Measure and multiply the reading you get by six and connect a resistance of that value across the winding that you just measured. Now reverse the transformer, measure the previously shorted winding, connect a resistor of that value across it, and repeat the procedure on the high impedance winding. It doesn't take but about two or three measurements, going back and forth from one winding to another, to achieve a remarkable degree of accuracy. Practice on a few transformers of known value and if you find your readings coming out wrong, look for shorted clip leads or open connections. With a little practice and care you can solve your unknown transformer problems.

Connect unknown inductor between 1 & 2

Range	Posts 3 & 4 Std. Res.	Posts 5 & 6 Std. Cap.
1 – 100 uH	1	.01 uF
10 – 1000 uH	10	.01 uF
100 uH – 10 mH	100	.01 uF
1 – 100 mH	1k	.01 uF
10 – 1,000 mH	10k	.01 uF
0.1 – 10 H	1k	1 uF
1 – 100 H	10k	1 uF

Table 2. Inductance Measurements.

Connect unknown capacitor between 3 & 4

Range	Std. Res. Posts 1 & 2	Std. Cap. Posts 5 & 6
1 – 100 pF	10k	.0001 uF
10 – 1000 pF	10k	.001 uF
100 pF – .01 uF	10k	.01 uF
.001 – .1 uF	1k	.01 uF
.01 – 1 uF	10k	1 uF
.1 – 10 uF	1k	1 uF
1 – 100 uF	100 Ohms	1 uF

Table 3. Capacitance Measurements.

It will interest you to know that you can also measure carbon and wire wound resistors to a very high degree of accuracy using dc current. First connect a source of dc, a battery or other supply of from 1½ to 4½ volts to the input jack with a push-button in series, and a 0-50 or 0-100 dc center scale micro-ammeter to the output jack. Hook the standards and the unknown up in accordance with the resistance chart. Using the push-button for momentary contact, start rotating the dial until you start to get a null, after which you can hold the button down to finalize the null.

Using an audio oscillator you can also measure capacitance and inductance as well as resistance. I've included the charts for these measurements also. Just remember to keep all test leads as short as possible, make tight connections, and be careful of shorts and open connections. For those of you who want to get involved in the more esoteric and/or mathematical use of this instrument, your public library has more than one engineering manual that will give you the dope on such elegant things as finding the power factor of capacitors, etc.

As for me, I just hook 'em up using the charts, tune for the best null I can get, and I'm happy with the results; but of course I'm just an old cut and try type. Try it; you'll like it. ■

1	1 Ohm res.	1	.0001 uF cap.
1	10 Ohm res.	1	.001 uF cap.
2	100 Ohm res.	1	.01 uF cap.
2	1k Ohm res.	1	1 uF cap.
2	10k Ohm res.		

Table 4. List of required standard resistors and capacitors, 1%.

Bob Hart K7YGP/7
622 W. 4th Street
Medford OR 97501

How Those Triangle Things Work

--a sort of op amp handbook

Definition of operational amplifier: one that works, as opposed to a non-operational amplifier; also known as that "triangle thing" on a schematic.

While not strictly accurate, the above definition is as good as any. While most of you have the idea that this triangular symbol represents some kind of amplifier, you may not be aware of how this thing called an op amp does its job. While, like any other amplifier, the function of an op amp is to create a large signal from a small one, the op amp has some special characteristics that need to be known in order to use it. With proper connections the op amp can become an amplifier of stable gain, an integrator, a voltage comparator, or function in almost any other way you can imagine (or glean from the application notes). The heart of all these things is an almost perfect, slightly temperamental but versatile building block.

Before we take a look at the real device, it might be interesting to look at a perfect amplifier. We'll start at the input. One of the most versatile input structures for an amplifier is the differential input. This has the ability to select those signals which appear different at each input while rejecting those signals that appear the same at each input. So the perfect amplifier has two inputs. Also, since the amplifier shouldn't load the preceding stage, the input impedance must be high. Since this is an imaginary amplifier we might as well make input impedance infinite.

Next, what about gain? Since we never know how much gain will be needed in a given application, an infinite gain amplifier should cover all possibilities. You might think that infinite gain would be difficult to control but, as you will see later, the gain can easily be modified by external circuitry. The next item to be considered is output impedance. In order to make sure the amplifier can drive any load, output impedance should be zero. And lastly, the amplifier output should respond instantaneously to any change in the input signal. This means that the bandwidth has to be infinite and the phase shift through the amplifier has to be zero. Our perfect amplifier is shown in Fig. 1.

As you have probably figured, real life operational amplifiers are not quite as perfect. Let's take as an example the UA709. Like our perfect amplifier, the 709 has two differential inputs: inverting and non-inverting. Input impedance is not quite infinite. In fact it is only about 250k Ohms. The voltage gain of this amplifier is quite high – somewhere around 50,000. To get 1 volt of signal output only 20 uV of input signal is needed. Output Z is in the order of 150 Ohms. The bandwidth of the amplifier is limited by internal circuit reactance to 1 to 2 MHz (Fig. 1).

It almost seems a little disappointing that the 709 turns out to be so far from ideal. Actually, the 709 is a fairly average op amp. Some devices approach the ideal more closely and some are worse. The reason the perfect amplifier was introduced was not to make all the real ones look bad, but to serve as a design model for all amplifiers. In most cases a real (imperfect) amplifier is treated as if it were perfect (see later).

Operational Amplifier Specifications

There are several specifications that are important to operational amplifiers. The first, A_{VOL}, has already been mentioned. This refers to the open loop or unmodified voltage gain of the amplifier. If you're looking over the specs of several amplifiers, you'll find that this specification usually is around 90 to 100 dB (30,000 to 100,000). In most applications the exact value is not important. What is important is that the gain is high.

Another important characteristic of op amps is their ability to reject signals that appear at both inputs at once. Remember with differential inputs the idea is to amplify the *difference* between the signals present at the two inputs. Any equal signals such as

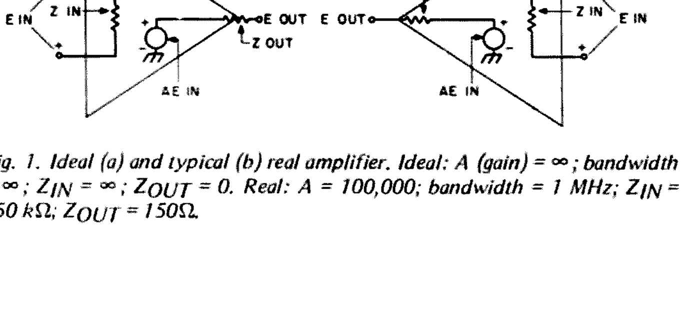

Fig. 1. Ideal (a) and typical (b) real amplifier. Ideal: A (gain) = ∞; bandwidth = ∞; Z_{IN} = ∞; Z_{OUT} = 0. Real: A = 100,000; bandwidth = 1 MHz; Z_{IN} = 250 kΩ; Z_{OUT} = 150Ω.

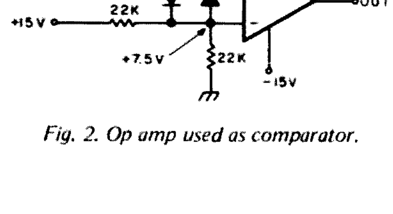

Fig. 2. Op amp used as comparator.

noise, hum or dc bias should have no effect on the output. The ability to reject these common signals is known as the common mode rejection ratio (CMRR) and is usually expressed in dB. It is simply the ratio of common signal to differential signal required to give the same output in either case. Most IC op amps achieve a CMRR of about 90 dB. This means that, in an open loop condition, if A_{VOL} is also 90 dB, differential signals will be amplified by 90 dB while common signals will be effectively amplified by only 0 dB (1). Like A_{VOL}, CMRR is very high in the typical op amp and can be treated in most cases as if it were perfect.

Let's shift away from the entire amplifier and take a look at the inputs of the common operational amplifier. Remember that the inputs of the mythical perfect amplifier were of infinite impedance. Of course the real amplifier doesn't quite make it. What's worse, the inputs are the bases of 2 separate (and therefore slightly different) transistors. A small but finite current must be injected into the bases of these transistors in order to turn them on. This current is, of course, called input bias current. And since the input transistors are slightly different, differing amounts of current are needed by each transistor to give the same effect. This current difference is known as offset current. Another type of offset occurs because of a slightly different reference level at each input. This is a voltage offset and in many op amps provision is made to adjust this out. In any case these offsets are small (typically 100 mA and 2 mV respectively) and are only of consequence when the amplifier is used in low input level situations. In situations where the input level is high in relation to the offsets, their effect is insignificant. But it should be recognized that those offsets exist and if the amplifier is to be expected to respond to low level signals, they must be dealt with.

As you probably are aware, not too many IC op amps perform well as 432 MHz amplifiers. As a matter of fact, most operational amplifiers are limited to an absolute maximum frequency of around 1 MHz. Some are not even good for high gain use as a hi-fi audio amplifier. This limitation is generally due to parasitic capacitance between circuit elements on the IC chip. Another more severe limitation is due to internal frequency compensation (see later).

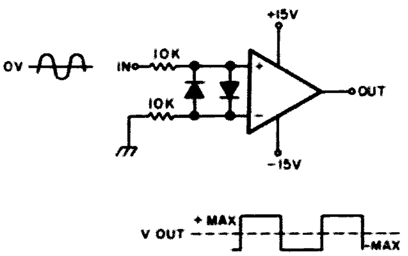

Fig. 3. 0 crossing detector.

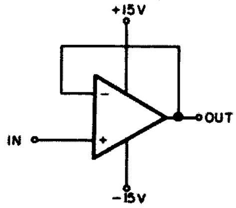

Fig. 4. Voltage follower.

$V_{IN} = V_{OUT}$.

Whatever the cause, op amps do not make good rf amplifiers, so their use is limited to the high audio range.

There are two bandwidth-related specifications that concern these amplifiers. The first is usually given in a graph as device gain versus frequency. The gain is usually flat from dc to some frequency at which point it starts to fall. The frequency at which the gain has dropped to 0 dB is called the unity gain crossover. At frequencies above this point the op amp becomes a very complicated and not too predictable resistor. The range between the start of fall off and the unity gain crossover is important to the stability of the amplifier and will be covered more fully later.

The other bandwidth-related specification deals with the ability of the output to change level rapidly. This is termed the slew rate and is given in V/uS. The higher the value of this specification, the faster the output voltage can change. You can see that since higher frequency signals change faster than those of low frequencies, the amplifier is less able to reproduce the high frequencies at high amplitude. The effect of slew rate is to make the bandwidth appear higher at low output levels than at high levels. This is not too great a problem unless you're trying to use the op amp as a power amplifier near its upper frequency limit.

How To Use 'Em

After going through the preceding section and learning how non-perfect IC op amps are, we are going to turn around and use them as if they were perfect. The why of the matter is two-fold. First (and most important), the IC is so close to perfect that the difference doesn't matter much. As an example, if we construct a voltage follower with a perfect amplifier (infinite gain) we would get 1.00000 . . . V out with 1.00000 . . . V input. With our non-perfect amplifier (gain = 100,000) 1.00000 . . . V input gives 0.999990 V out. That is only .001% error. Not bad, I would say. The second reason for calling our amplifier perfect is that circuit analysis becomes dirt simple.

Enough of this theoretical stuff. Let's see how these plastic (and/or metal) packages can be used.

One of the simplest ways to use the op amp is as a voltage comparator. With its high gain, a difference at the input of only a few millivolts produces full output. As shown in Fig. 2, a voltage divider (or a zener diode or

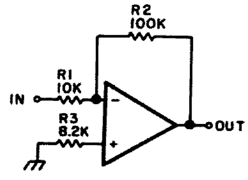

Fig. 5. Inverting amplifier.

$$\frac{V_{OUT}}{V_{IN}} = \frac{R2}{R1} = \frac{100k}{10k} = 10$$

some other stable voltage reference) places a fixed 7.5 V at the inverting input of the amplifier. Whenever the input voltage exceeds 7.5 V, the output swings to the positive limit. Whenever it is less than 7.5 V, the output swings to the negative limit. Of course the inverting and non-inverting inputs may be swapped if opposite output swings are desired. The only thing to remember is that the impedance seen by the two inputs should be about the same to minimize the effects of input bias current. This is desirable in any op amp circuit. The two diodes across the input only serve to limit the differential input. Some amplifiers behave strangely when their input becomes too great (like the inputs may self-destruct or the output may become the opposite of what it's supposed to or the output may latch in one state and forever thereafter ignore the input).

Another circuit (really the same circuit but used differently) is the squarer or 0 crossing detector (Fig. 3). Whenever the input waveform exceeds ground potential, the output swings giving a rectangular wave output no matter what kind of input signal is present.

That is about all that can be done with the operational amplifier without some form of feedback. By adding appropriate feedback, the amplifier can be made to do many chores. The main advantage of feedback amplifiers is that the characteristics are controlled by the feedback network – the characteristics of the amplifier itself have little effect. That's why the real life amplifier can be regarded as perfect – the differences are almost completely cancelled by feedback.

Feedback Amplifiers

The first circuit to be introduced in this group is known as a voltage follower (see Fig. 4). The actual function of this circuit is of an impedance transformer. It will take a signal from a high Z source and duplicate it at a much lower impedance. Since there are no components other than the operational amplifier, the design procedure is quite simple. Simply connect the output back to the inverting input. To find out approximately what those input and output impedances are, a couple of simple formulas are used.

For input impedance find the values for A_{VOL} and differential Z_{IN} in the spec sheet and stick them in this formula: $Z_{IN} = (Z_{IN,DIFF})(A_{VOL})$. For the 709 this works

out to about 11 G Ohms. (Yes, gigaohms!)

For Z_{OUT} find output resistance and A_{VOL} in the spec sheet and use this formula:

$$Z_{OUT} = \frac{R_{out}}{A_{VOL}}$$

Again, for the 709, this works out to 3 milliohms. Do not be misled by this figure. This low output impedance is only apparent if the current driving capabilities of the amplifier are not exceeded. If high current outputs are required, a power amplifier should be connected to the output *within* the feedback loop.

The best figures for the above occur where the gain is highest (0 Hz). Note that as the frequency goes up and A_{VOL} drops off, both Z_{IN} and Z_{OUT} become less ideal. But for only one component and thousands of megohms of input impedance it's a pretty good circuit.

The principle used in designing this and other feedback amplifiers is to regard the amplifier as perfect — that is, having infinite gain and infinite input impedance. If the amplifier has infinite gain the only way we can get a finite voltage at the output is with

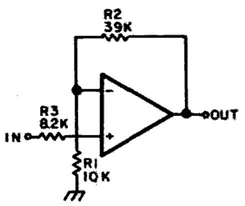

Fig. 6. Non-inverting amplifier.

$$\frac{V_{OUT}}{V_{IN}} = \frac{R1+R2}{R1} = \frac{10k+39k}{10k} = \frac{49k}{10k} = 4.9.$$

0 volts differential input. With the amplifier connected in a negative feedback configuration, the output will increase until its effects become equal to, and effectively cancel, the input voltage (at the non-inverting input). The principle of the feedback cancelling the input is used to design all feedback amplifiers using high gain op amps — the output stabilizes at a level that reduces the differential input to zero.

If you really want to do more with the signal than duplicate it, you can place some resistors in the feedback loop and give the amplifier any gain desired. The first of two amplifier circuits is shown in Fig. 5. This circuit inverts all signals applied to its input. The gain of this circuit can be computed:

$$A_V = -\frac{R2}{R1}$$

(the — indicates an inversion has taken place). Mathematically, this works out very simply. Since the inverting (−) input is held at 0 V (or some other constant set by the voltage at the non-inverting input), R1 and R2 form a voltage divider whose center

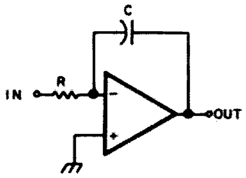

Fig. 7. Op amp integrator (see text).

point is at 0 V. Also since the input impedance is supposed to be infinite, the current through R1 is equal to the current through R2:

$$I_{R1} = -I_{R2}$$

or $$\frac{V_{IN}}{R1} = -\frac{V_{OUT}}{R2}$$

or $$\frac{V_{OUT}}{V_{IN}} \text{ (voltage gain)} = -\frac{R2}{R1}$$

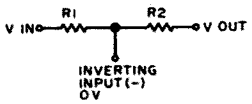

Remember that this simple math is only for the perfect amplifier: infinite gain and zero current injected into or sunk from the inputs. R3, I'm sorry to say, is used to compensate for one of the amplifier's imperfections — the current used by the inputs to bias themselves on. Its value (R3) is usually equal to the parallel value of R1 and R2. The idea is that both inputs should see the same impedance to minimize the effect of input bias current. If the input bias current is much less (less than 5%) than the feedback network current, R3 is not really necessary.

The second type of feedback amplifier is the non-inverting type (the voltage follower is a special case of this type; see Fig. 6). Once again, by placing resistors in the feedback loop and input we can tailor the gain to any value. In this circuit R3 has the same function as in the inverting amplifier . . . R1 and R2 are the gain control elements, and by making the same assumptions as for the inverting amplifier, we can see that the currents are equal in both resistors and their common point is held at V_{IN}. The math goes like this:

$$I_{R_2} = I_{R_1}$$

or $$\frac{V_{OUT} - V_{IN}}{R_2} = \frac{V_{IN}}{R_1}$$

or $R_1 V_{OUT} - R_1 V_{IN} = V_{IN} R_2$

or $R_1 V_{OUT} = V_{IN} R_2 + V_{IN} R_1$

or $R_1 V_{OUT} = V_{IN} (R_1 + R_2)$

Finally, $$\frac{V_{OUT}^{*}}{V_{IN}} = \frac{R_1 + R_2}{R_1}$$

*Voltage Gain.

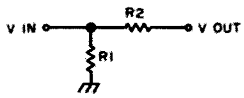

Input and output impedances of these last two circuits are fairly easy to estimate. The method is nearly the same as for the voltage follower circuit. The only difference is that these impedances are not improved by the full A_{VOL}. Since we "used" some of the gain of the amplifier to increase the amplitude of the input signal, that "used" portion must be deleted from the total A_{VOL}. What's left is referred to as loop gain:

$$\frac{A_{VOL}}{A_{FB}} = A_{LOOP}$$

A_{LOOP} is used just like A_{VOL} was previously:

$$Z_{IN} = (Z_{DIFF})\,(A_{LOOP}) \text{ and } Z_{out} = \frac{R_{out}}{A_{LOOP}}$$

Any impedances in series with the amplifier terminals have to be added to the computed impedance. This usually makes no difference to the input but can change the output considerably.

Non-Linear Feedback

You have seen how placing resistors in the feedback path can affect amplifier characteristics. Now what would be the effect of a capacitor stuck in the feedback path? Let's start with the circuit shown in Fig. 7. This, as you notice, is very similar to the inverting amplifier shown previously, except for the substitution of C for R2. And also the gain formula originates in the same way. This is going to be a little more complicated since putting a capacitor in there tells us there is going to be a time factor. Let's give it a try: The currents through C and R must be equal since their junction is at a high Z fixed voltage point. So: $I_C = -I_R$

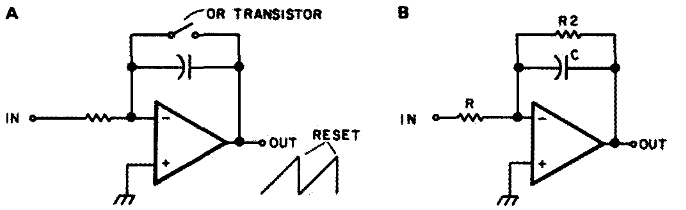

Fig. 8. Integrator modification to correct for offset drift. (a) Ramp generator application. (b) AC application — leaky integrator.

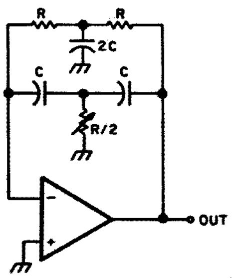

Fig. 9. Twin T sine wave oscillator. $f_{OUT} = \frac{1}{2\pi RC}$. *R/2 adjusted until circuit just oscillates.*

We seem to have run into trouble right away since it's hard to give a resistance value to a capacitor. But luckily:

$$I_C = \frac{C \cdot E}{t} \quad \text{(C in farads, E in volts, t in seconds)}$$

Sticking that in the formula,

$$\frac{C \cdot V_{OUT}}{t} = -I_R = -\frac{-V_{IN}}{R}$$

Now we're getting somewhere. The gain is then:

$$\frac{V_{OUT}}{-V_{IN}} = \frac{t}{RC}$$

You may be wondering what that's supposed to mean. Not much as it stands, but change a few terms around and:

$$V_{OUT} = \frac{t(-V_{IN})}{RC}$$

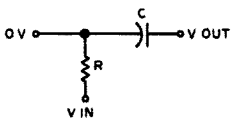

With any given components (R and C) and with a given input (V_{IN})(hold them all constant), V_{OUT} will increase linearly with time (a ramp generator!). Increasing the RC product will lower V_{OUT} in a given time or will increase time for a given V_{OUT}. By reversing the polarity or amplitude of V_{IN} the direction and slope of the output can easily be controlled.

This circuit is generally known as an integrator and functions the same as an RC integrator except that the circuit (with the op amp) has the advantage of linear operation, higher Z_{IN}, low output impedance and voltage gain.

If the gain of this circuit is plotted versus frequency, it will be seen that the gain is infinite (or A_{VOL}) at dc and then begins to drop off 6 dB per octave starting at a point determined by R and C. The frequency is actually:

$$\frac{1}{2\pi RC}$$

Looking at it this way, this circuit turns out to be a low pass filter. By placing appropriately frequency sensitive components in the feedback network almost any response can be generated. This is the basis of active filters which have been adequately covered in a previous article[1]. Anyone interested in active filters should read that article.

If you want to try an op amp integrator there is a practical problem that should be mentioned. If the circuit of Fig. 7 is used as is, the output will tend to drift toward maximum in one direction or the other. This is because the circuit will continue to integrate any offset error at the input even with the input grounded. This problem can be eliminated when using the circuit as a ramp generator by resetting the circuit at the end of each ramp with a switch or transistor across the capacitor (Fig. 8a). Closing the switch causes the output to return to whatever input appears at the non-inverting input (in this case zero). The switch is then opened when you want to start integrating again.

When integrating an ac signal, special arrangements must be made since integration must be continuous. One thing you could do is to synchronize the input to the integrator output. When the output reaches some maximum level, the input should change to run the integrator output in the opposite direction. The only use for this method I've seen is for a type of oscillator.

The most practical method of using an op amp integrator with an ac input signal is shown in Fig. 8b. An extra resistor, R2, is added. This resistor provides enough feedback current to cancel any error at the input. Of course, this simple solution does have its problems. The gain and frequency range of integration are reduced by some degree and the operation performed by the circuit is not a true integration. But these effects are relatively minor so this circuit should work well in most situations. The circuit is known, appropriately, as a leaky integrator.

Another area of non-linear feedback circuits is that of oscillators. Oscillators differ from the previously described amplifiers in that they use *positive* feedback. How that feedback is handled determines the type of oscillator and the type of output. Actually, any type of oscillator can be implemented using op amps. The trick is to combine a gain element (the op amp) and some sort of frequency sensitive phase shift element. A few examples follow with not much math.

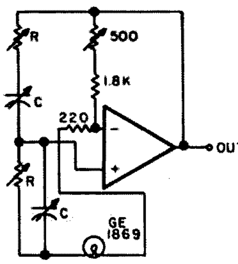

Fig. 10. Wein bridge oscillator.

$$f_{OUT} = \frac{1}{2\pi RC}$$

Sine Oscillators: Sine wave oscillators using operational amplifiers are very similar to discrete oscillators except that the op amp is the active element. The first shown is known as a twin T or double integrator Oscillator. [Note: An integrator provides a 90° phase shift to a signal at the frequency:

$$f = \frac{1}{2\pi RC}$$

The double integrator ought to (and does) provide a 180° phase shift at that frequency. The RC network provides 180° phase shift at the oscillation frequency (see Fig. 9). An interesting feature of this circuit is that if R/2 is adjusted so that the circuit just does *not* oscillate, you have a narrow bandpass filter. Apply the input through a resistor to the (−) input.

Another sine oscillator is the famous Wein Bridge, shown in Fig. 10. The output is a very low distortion sine wave.

Square Wave Oscillators: A simple multivibrator type circuit which generates a

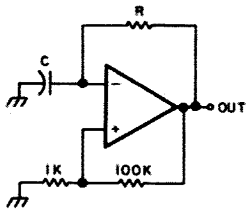

Fig. 11. Square wave oscillator.

$$f_{OUT} = \frac{1}{2\pi RC}$$

square wave is shown in Fig. 11. The output will alternately switch from full positive output to full negative output.

Another oscillator that produces a square wave also generates a linear ramp triangle wave. It consists of one op amp wired as an integrator while the other is wired as a comparator whose reference changes according to the slope of the integrator output. This circuit is commonly used as the basic oscillator in function generators[2]. See Fig. 12.

In this section I've tried to show in a general way how the operational amplifier functions in a circuit. These examples are by no means all that can be done with these amplifiers. Manufacturers' data books and application notes are full of additional information. With a little experimenting and simple design work it shouldn't be too difficult to think of a few applications of your own. Before you start, there is one more thing you should be aware of.

Compensation

While most operational amplifiers used today have no need for compensation (they are already internally compensated), there

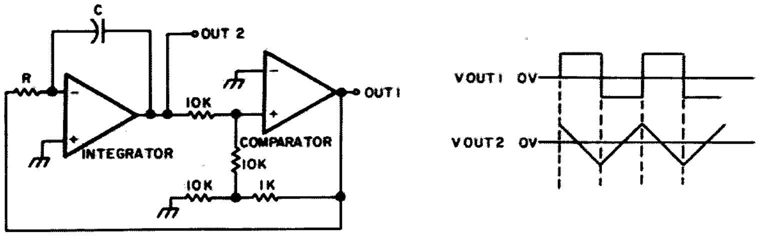

Fig. 12. Simultaneous square and triangle wave generator. $f_{OUT} \approx \frac{0.55}{RC}$

are some applications where it is necessary to use an uncompensated amplifier and do the compensation yourself.

First we must determine what compensation is and why it is necessary. Unlike the perfect amplifier, our op amp has a limited bandwidth. At some high frequency point the response (gain) tends to fall off. Without compensation the rate of fall off is usually quite fast. When the op amp is used as a feedback amplifier, there is a point where the open loop gain equals the closed loop gain. If the open loop gain at this point falls off too fast, the circuit may oscillate at that frequency. The only way to avoid instability or oscillation is to make sure that the rate of open loop gain fall off is 6 dB/octave or less at the crossover point. That is the function of compensation – causing the gain of an amplifier to fall off in a predictable way to prevent instability.

An internally compensated amplifier is adjusted so that the gain starts falling off at 6 dB/octave (20 dB/decade) at about 2 Hz. The voltage gain drops to 0 dB at 1 MHz (for the 741). While this guarantees that the amplifier will be stable under any conditions, it limits the gain severely at high frequencies. To obtain high gain at high frequencies an uncompensated amplifier has to be custom compensated to begin the 6 dB/octave fall off at some higher frequency. The instructions for compensation are usually contained in the manufacturer's specification sheet. For example, a UA709 can be compensated for 60 dB gain up to 500 kHz while the internally compensated UA741 would only be good for a marginal 10 dB voltage gain at that frequency. Internal compensation is only there for convenience; there are some advantages to non-compensated op amps. Some common uncompensated types are UA709, LM301 and LM308. Compensated types include UA741, 5558 and LM307.

Some Other Amplifiers

This entire discussion so far has concerned common op amps of the 709-741 variety. These have bipolar transistor input and are voltage controlled voltage output devices and usually require a balanced power supply. But the IC industry has definitely not stopped there. There are amplifiers with high slew rate outputs (531), Darlington transistor inputs (LM316), FET inputs (536), single supply requirements (LM324 – this device also boasts four amplifiers in one package), and even some that require very low power (533). While some of these have some fairly special characteristics, they operate much the same as the old 709.

There are other type amplifiers that don't operate exactly like an op amp. RCA has a family of devices called transconductance amplifiers. This means they are voltage controlled, *current* output devices. What they've come up with is a high gain, differential input, solid state vacuum tube (or FET). Regretfully, I have no information about them so I can't give any definite applications.

Another interesting device (which I happen to know something about) is the LM3900. These would be called operational amplifiers except that this device amplifies the difference in the *currents* into the inputs. The currents required are fairly small (usually around 10 uA), so large value resistors in series with the inputs can turn this into a voltage amplifier if that is necessary. Positive features of this device (according to National Semiconductor) include its ability to operate with either single or bipolar supplies, a large output voltage swing, a fairly wide bandwidth even with internal compensation and its low cost (there are four amplifiers to a package for less than 60¢).

A few typical applications are shown in Fig. 13. For more information contact National Semiconductor[3]. Their data sheet includes several pages of applications for this device. The spec sheet says these devices are designed primarily to produce ac amplifiers, RC active filters, low frequency waveform generators, tachometers, or low frequency, high voltage logic elements. Try your hand at some of them or adapt some regular op amp circuits. Remember, this device can also be treated as a perfect amplifier except that the inputs are controlled by current, not by voltage as in a normal op amp.

In this article I've tried to give a broad outline of the whys and wherefores of operational amplifiers. While this is nowhere near all there is to say about op amps, it is hoped that those triangular symbols are now less of a mystery. Go through this magazine and see if you can analyze the operation of any op amps used in other articles (my luck, this is an antenna issue or something). For more information Motorola[4] publishes several application notes: AN-204 – "High performance Integrated Operational Amplifiers," AN439 – "MC1539 Op Amp and its Applications," and AN-522 – "The MC1556 Operational Amplifier." If you have access to a technical library, Burr-Brown (a well established op amp manufacturer) publishes a book (*Operational Amplifiers*) that contains all the information you would want. Manufacturers' spec sheets will also contain a great deal of information. The more information you have and use (and hopefully this article was of some help), the less mysterious those "triangle things" can become. ■

References

[1]Williams, "Active Filter Design and Use, Pt. III," *73 Magazine*, Sept. 1972, p. 76.

[2]Olsen, "Build This Amazing Function Generator," *73 Magazine*, Aug. 1975, p. 121.

[3]National Semiconductor, 2900 Semiconductor Drive, Santa Clara CA 95051.

[4]Motorola Semiconductor Products, PO Box 20924, Phoenix AZ 85036.

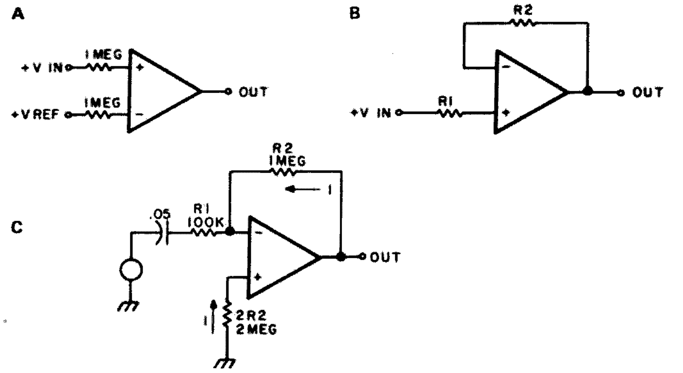

Fig. 13. LM3900 circuits. (a) Voltage comparator. (b) Non-inverting DC amp; $\frac{V_{OUT}}{V_{IN}} = \frac{R2}{R1}$. *(c) Inverting AC amplifier;* $V_{OUT(DC)} = \frac{V+}{2}$; $A_{V(AC)} = \frac{R2}{R1} = 10.$

Tom Yocom WA1RTD
21 Bayberry Road
Acton MA 01720

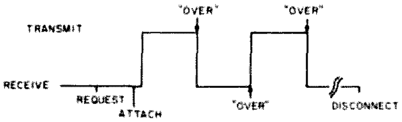

Fig. 1. Base station running manual patch. Keyword "OVER" triggers switching between transmit and receive.

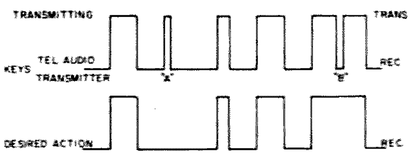

Fig. 2. Base station running manual-VOX patch. Telephone audio controls transmitter, sporadic noise causes false keying at "A" and hesitation causes premature dropout at "B."

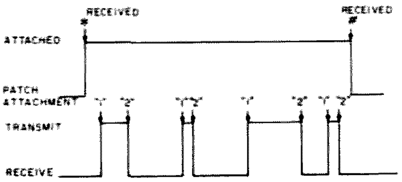

Fig. 3. Base station equipped with automanual patch. Called party transmits two control tones — one to start the transmitter ("1"), and another to stop transmitting ("2").

Phone Patching '76

--automatic single frequency patch

Phone patches have been popular for many years, and the advent of repeater systems spawned a new age of phone-in-the-car enthusiasts. Many VHF and UHF repeaters have automatic telephone patches, i.e., autopatches. The telephone service is an easily added system feature and renders hours of enjoyment and a potential for substantial public service.

There are those among us who have become so fascinated with the autopatches that they are an end in themselves. That is, the underlying motivation for building a repeater is the promise of mobile telephone service. We all know about not being allowed to use these systems for commercial purposes, but there are many non-commercial applications that are both fun and of significant public service. Applications range from receiving shopping lists from home to reporting traffic mishaps, fallen power lines, etc.

The conventional autopatches, so frequently an integral part of repeaters, are characteristically half-duplex devices. This means you can either talk or listen, but not both at the same time. The common HF phone patches are typical of this mode of communication. For a full-duplex patch you would need to simultaneously receive and transmit. This would require the mobile transmitter and receiver to be operating at the same time. For most amateurs, this would pose significant technical problems, not the least of which would include an additional antenna or some type of diplexer to use a single mobile antenna. The telephone company has already perfected this mode of operation. Of course, the full-duplex approach uses two radio frequencies (one for transmit and one for receive) and provides "realistic" telephone service — you can do all the things characteristic of telephone conversations — butt in, insert lots of "uh-huhs," etc!

For casual amateur purposes, it may not be necessary or practical to worry about full-duplex service. But if half-duplex service is adequate, then why utilize two valuable radio channels? Why not use repeaters to extend the range of reliable communications and single frequency telephone systems to provide half-duplex telephone service? At least this is a nice technical thing to think about even if telephone-only systems might cause the FCC to experience a new set of amateur problems. After all, what is a fully automatic base station that renders telephone service? It's certainly not a repeater for it doesn't repeat. It's not a remote base for it never functions as a base for the mobile user — or does it? Well, anyway, let's continue the technical considerations.

Types of Single Frequency Phone Patch Systems

Several types of single frequency phone patch systems can be considered and then discussed in turn:

1. Manual phone patch
2. Manual-VOX phone patch
3. Automanual phone patch
4. Autovox phone patch
5. Time division phone patch

The following discussion will demonstrate that all of these systems are practical and that the last three are capable of providing fully automatic (autopatch) service on a single radio channel.

Manual Phone Patch

A manual phone patch is typified by the many phone patches operated on the HF bands. The phone patch is manually attached to the telephone line by the base station operator and the transmitting and receiving periods are likewise controlled by the base station operator. Typically, the operator responds to the keyword "OVER" which causes him to reverse the transmit/receive mode. If you've ever run such a patch for people not speaking your native language, you know the confusion that can result if you don't hear "OVER." The manual patch provides half-duplex service and uses only one radio frequency (assuming the two stations are "netted). Fig. 1 shows a typical activity sequence.

Manual-VOX Phone Patch

The manual-VOX phone patch is a relatively simple extension of the manual patch. Again, the base station operator manually

attaches the phone patch to the telephone line. In this system, a VOX circuit detects the telephone party's speech and in turn, keys the transmitter. Again, the keyword "OVER" is sometimes valuable to enhance coordination between the telephone party and the distant radio user. At least in this system, the radio operator is not needed to accomplish the individual transmit/receive actions – a level of automation has been accomplished. This patch provides half-duplex service and uses only one radio frequency. Fig. 2 shows a typical activity sequence.

Automanual Phone Patch

An automanual phone patch does not require a base station operator. The phone patch is attached to the telephone line upon receipt of a command from the radio user. The user simply transmits a special audio tone which is detected at the base station receiver. Once the patch is attached, the radio party transmits additional tones which are used to accomplish the number dialing (previously done by the base station operator). The base station control circuitry causes an identifying tone to be applied to the telephone line so that when the called party answers he can identify the fact that he is receiving a call from a radio user. This causes the called party (assuming he's been so instructed) to request use of the transmitter by sending a control tone – e.g., Touchtone "1". He likewise marks the end of his transmit period with a control character – e.g., Touchtone "2". When the telephone call has been completed, the patch is disconnected from the telephone line in one of two ways:

1. A circuit detecting the fact that the called party has placed his handset "on-hook" generates a disconnect signal; or
2. A control tone is sent by the radio user.

This system is semiautomatic – the phone patch is attached and released without a base station operator intervening. However, the switching between transmit

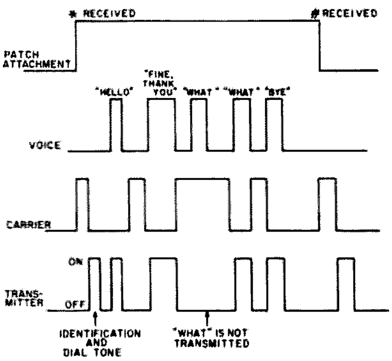

Fig. 4. Base station equipped with autovox patch. Note how first "What?" isn't transmitted – VOX is inhibited when a carrier is present.

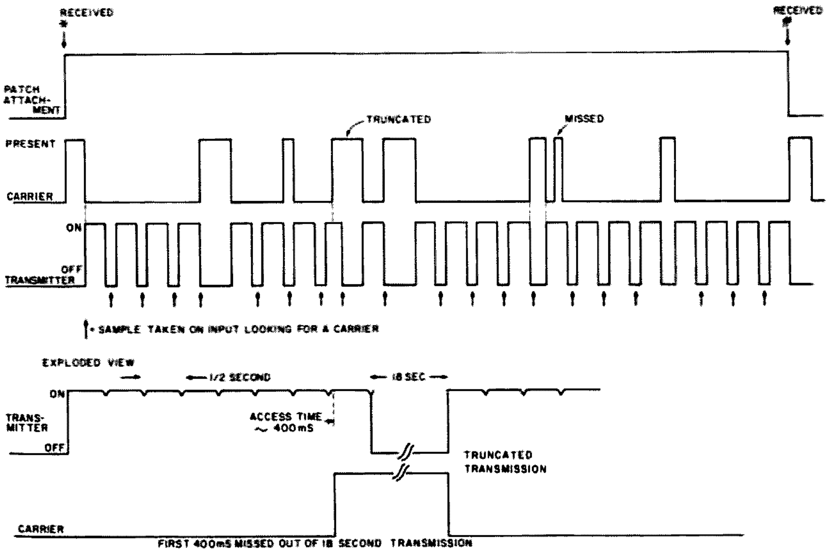

Fig. 5. Time division patch.

and receive is controlled by the telephone party – a less than ideal situation since many people called may not be trained or equipped to perform this function. If you intended to always call telephones manned by appropriately trained people and equipped for this type of operation, then this simple system would render a pseudo-autopatch service in a reasonable way. It is automatic, half-duplex, and uses a single frequency. Fig. 3 shows a typical activity sequence.

This system poses very interesting legal questions. The typically unlicensed telephone party controls the transmitter via special actions – namely transmitting control tones. Think for a moment about a telephone handset equipped with a PTT button (such things exist). Now consider a "beeper" circuit that generates one audio signal when the button is depressed and another when the button is released. The called party now looks very similar to a normal radio operator. Who's really in control of the transmitter? At least *at times* it's probably the telephone party with the transceiver functioning as his remote base station! Other systems exhibit this same problem – the time division patch (to be described later) solves this problem.

Autovox Phone Patch

An autovox phone patch is the logical extension to the automanual phone patch. Again, control tones from the radio user are used to attach and release the phone patch. However, the periods of transmit and receive are basically controlled by the telephone party's speech. This system allows the radio party to render all of the significant control functions while enabling the called party to initiate the transmit and receive periods without needing special equipment or instructions. This patch is fully automatic and renders half-duplex telephone service on a single frequency. Fig. 4 shows a typical activity sequence.

Time Division Phone Patch

The time division phone patch derives its name from the fact that the base station control logic divides the transmit time into periods of transmission *and* reception. During very brief receive periods that take place during interruptions to the normal transmit activity, the system receiver is able to detect the user's incident carrier and therefore cease transmitting and enter a prolonged receive period. This patch introduces additional technical complexities to the base station (no changes to mobile users), but renders better service in that the radio

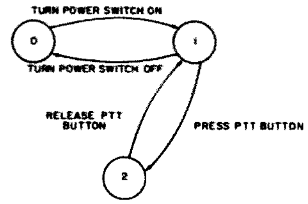

Fig. 6. Fundamental state diagram.

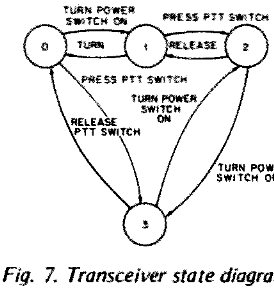

Fig. 7. Transceiver state diagram.

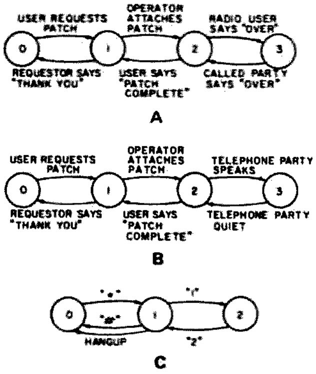

STATE	SIGNIFICANCE
0	Idle
1	Patch attached, base station receiving
2	Patch attached, base station transmitting

*Fig. 8. User attaches patch via *, releases via #, auto-release via called party hanging up. Digit "1" means start transmitting and digit "2" means start receiving.*

user is in full control of the system (unlike *any* of the other systems wherein the user is at the mercy of the base station operator, a telephone user, or a VOX circuit). The time division phone patch is fully automatic, renders half-duplex telephone service, and uses a single frequency while enabling total radio party control. Fig. 5 shows a typical activity sequence.

Practical Considerations

Each of these systems has its strong and weak points – some require a base station operator, some do not, some require sophisticated control logic and some do not. You can't have your cake and eat it too! However, all of these systems will work. Most of us are quite familiar with the first two systems having either built patches, used patches, or been served by patches. The others are less well known. The automanual patch, while relatively simple, has extremely limited usefulness, and so it's not very interesting for general application. The autovox patch and time division patch are quite workable and worthy of further study.

State Diagrams

State diagrams are a popular graphic convention used in the fields of electrical engineering and computer language processing. State diagrams are a helpful aid to understanding complex event sequences. Following a brief description of state diagrams, each of the patch systems will be described and discussed using this graphic convention. It is then possible to build appropriate control circuits to in effect "implement" the state diagrams.

The idea of a "state" needs to be understood before continuing. A state is representative of a particular *condition.* For example, a 2 digit binary counter has four states – 00, 01, 10, 11. The counter can be in any one of these "states"; i.e., the counter's "condition" is that it contains 00, 01, 10 or 11 as the count. A state diagram consists of a series of circles containing numbers indicative of a particular state. The circles are connected by lines showing what stimulus causes a *transition* from one state to another state. Fig. 6 shows a simple state diagram that describes the operation of a typical mobile transceiver.

The system has three states – named state 0, state 1 and state 2. State 0 is characterized by no activity, state 1 is the receive state, and state 2 is the transmit state. Note that the state diagram shows what happens to the system as a function of various actions. Note that the amount of detail shown is a function of the clarity you wish to show. Fig. 7 shows a further enhancement of the transceiver state diagram. Note how this completely describes the system – there are *four* states – 0 through 3. There are two primary controls: the power switch and the PTT button. Both of these switches have two positions – ON and OFF. A truth table shows these combinations:

STATE	PTT	POWER	
0	0	0	0 means switch "off"
1	0	1	1 means switch "on"
2	1	1	
3	1	0	

Specific State Diagrams and System Descriptions

Figs. 8(a), 8(b) and 8(c) show state diagrams for the first three phone patch systems discussed. Figs. 9(a) through 9(c) show state diagrams for an autovox patch.

Fig. 9(a) describes a very simple autovox

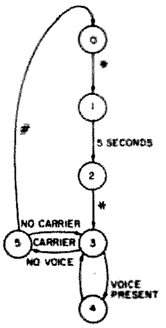

STATE	SIGNIFICANCE
0	Idle
1	Attach patch, key transmitter to broadcast dial tone
2	Receiving dialing information
3	VOX mode of transmitter control
4	Key transmitter and broadcast telephone party's voice
5	Inhibit transmitter and stay in receive mode

Fig. 9(a). Simple autovox system.

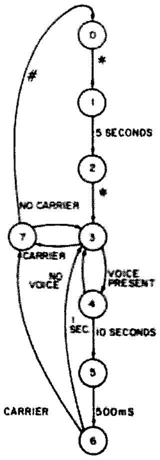

STATE	SIGNIFICANCE
0	Idle
1	Attach patch, key transmitter to broadcast dial tone
2	Receive dialing instructions
3	VOX mode of transmitter control
4	Key transmitter and broadcast telephone party's voice
5	Generate "beep" to inform user of control period
6	Receive period to allow user to "grab" control
7	Inhibit transmitter and stay in receive mode

Fig. 9(b). Improved autovox system.

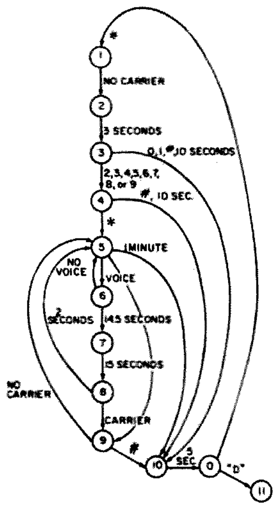

STATE	SIGNIFICANCE
0	Idle
1	Attach patch
2	Key transmitter to broadcast dial tone
3	Accept dialing information
4	Accept non-toll number
5	VOX mode of transmitter control
6	Key transmitter and broadcast telephone party's voice
7	Broadcast "beep" tone
8	Receive period to allow user to "grab" control
9	Inhibit transmitter and remain in receive mode
10	Initiate concluding identification sequence
11	System deactivated

Fig. 9(c). A practical autovox system.

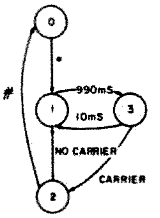

STATE	SIGNIFICANCE
0	Idle
1	Attach patch, key transmitter
2	Inhibit transmitter, stay in receive mode
3	Inhibit transmitter, activate receiver

Fig. 10(a). Simple time division patch system.

One sample taken every:	Length of sample (ms)	Poor	Fair	QUALITY Good	Excellent	Essentially Unnoticeable	% Transmitted
1 sec	50				X		95
2 sec	50					X	97.5
2 sec	100		X				95
1 sec	75			X			92.5
2 sec	75					X	96.25
1 sec	58				X		94.2
.5 sec	58			X			88.4
1 sec	42				X		95.8
2 sec	42					X	97.9
3 sec	42					X	98.6
3 sec	100		X				96.7
5 sec	150		X				97
5 sec	42					X	99
.5 sec	42		X				91.6

Fig. 10(b).

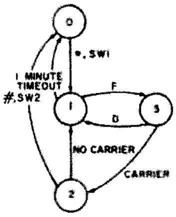

Fig. 10(c). A practical time division patch system.

patch system. A user transmits a "*" to activate the system. The system immediately responds by attaching the patch and keying the transmitter to broadcast the dial tone. A normal VOX circuit would continue to key the transmitter due to the presence of the dial tone. The control logic includes a five second timeout to keep this from happening. State 2 is a receive only state and during this period the user transmits number dialing information — either via a rotary dial or Touchtone pad. The user marks the end of the dialing activity by sending a *. State 3 is a general receive state. If the user transmits a signal, the control logic goes to state 5 where voice on the phone line is ignored (the radio user has control). If voice is detected during state 3, then state 4 is entered and the transmitter is keyed to broadcast the telephone party's voice. When there is no more voice present, state 3 is reentered. The patch is disconnected when a # is received in state 5 — user is in control and transmits a #. Note that the user cannot get control when the system is in state 4. The base station transceiver is not receiving! Several improvements can be made to this system.

Fig. 9(b) describes a better autovox patch system. In this system, three additional states have been added to allow the mobile an opportunity to gain periodic control.

If voice persists for 10 seconds (system stays in state 4 for 10 seconds), then state 5 is entered. State 5 causes the transmitter to be turned on and an "alerting audio tone" is applied to the transmitter's input. After 500 ms of this tone, state 6 is entered for a maximum of 1 second. If the mobile user keys his transmitter, the resulting carrier will cause state 7 to be entered wherein the user can talk to the telephone party and/or transmit a control character such as # to disconnect the patch. This type of control logic enables the system to accommodate situations such as an over-sensitive VOX circuit, a long-winded telephone party, or a call to a telephone located in a very noisy area. The voice and carrier signals are mutually exclusive in that the presence of a radio signal causes the voice signal to be ignored and a voice signal causes a radio signal to be ignored — in fact "missed" since the transmitter is then on and the receiver is then off.

Additional improvements can be made through the addition of timers and escape paths. Fig. 9(c) shows the state diagram of a good, workable autovox patch system. (This logic has been fully implemented using T^2L logic to control a 2 meter autovox system.) Several significant features have been added to the system shown in Fig. 9(b). A minor improvement consists of introducing a state to keep the autopatch system from QRMing the user at start-up time (state 2 is not entered until the carrier that presented the * has ceased). States are also included to "block" toll calls. When the dialing state is entered (state 3), an initial 0 or 1 will abort the control sequence. Note also that the system only provides 10 seconds for the first valid digit. The user may also deliberately abort the control sequence by sending a #. It is thus possible to "test" the system by transmitting a * and then a #. Receipt of a valid first digit (2, 3, 4, 5, 6, 7, 8 or 9) causes state 4 to be entered. In this state the additional digits composing the telephone number are "dialed." If an error is made, a # may be used to exit the control sequence. If the user is too slow, or if his signal fades out, a 10 second timer aborts the control sequence. The end of dialing information is indicated by the user transmitting a * which moves control to state 5. States 5, 6, 7, 8 and 9 function the same as states 3, 4, 5, 6 and 7 in Fig. 9(b). State 10 is added to serve as a terminal state which initiates an identification sequence. In fact, in the actual implementation, an identification sequence was initiated upon entry into state 3, at periodic intervals during use, and upon entry into state 10. State 11 can be entered by sending a "D" to "kill" the system — theoretically "pulling the plug." The 1 minute timer associated with state 5 causes the system to abort if there is no activity for a period of 1 minute — no activity being no signal received and no voice on the telephone line. In addition, a call length timer is associated with the system being in any state other than state 0; to allow for longer telephone calls, the user can reset this timer by sending a "D" character.

There are two significant weaknesses in the autovox patch system. First, the radio user can only grab control in particular states — 5 and 8 in Fig. 9(c). This limits the user's ability to inhibit a runaway system or censor an over-excited telephone user. The second weakness is in the use of a VOX circuit. Reliable VOX circuits are a rarity unless they become rather sophisticated electronically. On the other hand, the system is fully automatic, uses only a single frequency, and provides reliable service when properly adjusted.

Fig. 10(a) describes a simple time division patch system. While the state diagram is simple, the system is quite impressive in terms of its operational characteristics. Upon receipt of the access control

character, a *, the system attaches the patch. The transmitter is keyed whenever the system is in state 1. For the sake of simplifying the discussion, assume for the moment that a carrier is not received. In this situation, state 3 is entered after the system has been in state 1 for 990 ms. State 3 is left after 10 ms. The system thus cycles between states 1 and 3 – staying in state 1 most of the time – in fact 99% of the time. (Note: Time is divided between transmitting and receiving – thus the term time division.) In state 1, the patch is attached and the transmitter is keyed; in state 3 the receiver is on and the transmitter is off. Consequently 99% of the telephone party's audio signal will be transmitted. Now, consider the effect of an incident carrier. If a signal is detected during the 10 ms time period that the receiver is active (via state 3), then state 2 is entered and the receiver remains activated (and the transmitter disabled) until the incident signal ceases, thereby causing state 1 to be entered. Since the receive state is entered approximately once every second, the *average* time needed for the system to detect a mobile user's signal is ½ second. From the user's point of view, this means that when he starts to transmit, his voice will be heard on the phone line within a maximum of 1 second – ½ second on the average. Actually, his signal will be detected within 0 to 990 ms; sometimes it will be detected immediately, other times not nearly so quickly.

The radio user will not receive all of the telephone audio – only 99% of it. Careful studies have been made to determine the effect of "missing audio" on the listener's ability to understand the information being transmitted. There are three principle factors:

1. How often the signal is interrupted;
2. How long the interruption lasts;
3. What replaces the missing signal.

Fig. 10(b) summarizes the author's subjective evaluation of an experiment performed by Chuck Fenwick WØFTM. The interruption rate and interrupt duration were varied while the same speaker read the same text at the same rate. The missing sections were replaced with silence.

In an operational time division autopatch system, the missing information would probably not be replaced with a zero signal. If VHF-FM is used, the lack of a signal produces a hissing sound; if AM is used, the lack of a signal is generally quiet, but certainly not totally quiet; other modes would have other characteristics.

Several practical considerations must be made in a time division patch system. The frequency of entering the receive state and the duration within the receive state must be carefully chosen. Ideally, you want to enter the receive state frequently and stay as short a time as possible. Entering frequently enables the user to gain access quickly; staying a short time minimizes the loss of information transmitted from the phone line

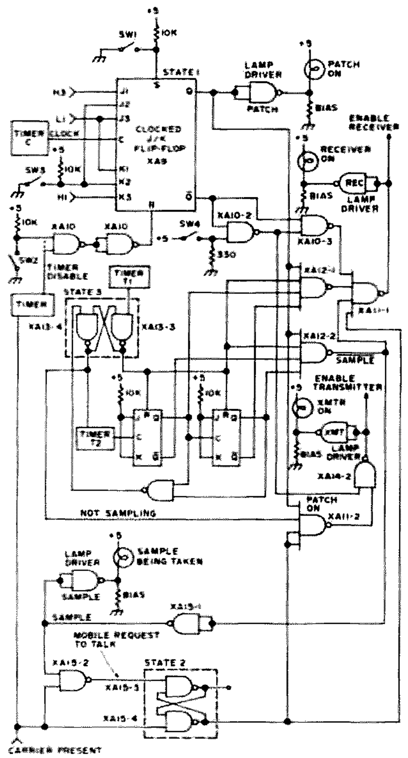

Fig. 11. Control logic.

due to the deactivated transmitter. A practical limit results from the inability to stop transmitting instantly and start receiving instantly. Even if this were possible, the speed of the carrier detection circuit must be considered. The operation is smooth when the frequency of interruption is a second or less and the duration is limited to a few milliseconds.

Fig. 10(c) describes a practical time division patch system which I have built and operated. The patch is activated by the * character or a depression of switch SW1. The system is deactivated by the #, or a 1 minute timeout (no carrier for 1 minute), or a depression of switch SW2.

An Operational Autovox System on 2 Meter FM

The autovox system described in Fig. 9(c) was implemented on a series of circuit cards using surplus T^2L logic components. One significant comment can be made about the implementation: It could have been better! The initial temptation is to view each state on the state diagram as a memory element – i.e., a flip flop. This approach results in 12 flip flops – one for each of the states 0-11. However, each flip flop has two states – either set or reset. If there are twelve flip flops, each of which can have two states, the system can theoretically assume any one of 2^{12} states! (Two flip flops can assume four states – 00, 01, 10 and 11, three flip flops can assume eight states, and twelve flip flops can assume 4096 states!) But, out of these, only twelve states are valid. A better implementation can be made by using a four-bit counter which can assume 16 states – 0 through 15. The logic that one builds then in effect says, "If the counter's value is V and action A occurs, then set the counter to M." Simple logic can detect the illegal states (entered perhaps via a noise pulse) and cause the counter to be set to some specific value. The counter's value is then indicative of the system's state. The counter is set to a particular value (system state) in response to detecting particular conditions in conjunction with a specific counter value. Fig. 12 shows in a general block diagram manner how logic for Fig. 9(a) would be implemented. Figs. 13(a) and 13(b) illustrate two approaches to implementing the set logic and state counter (actually a register). Fig. 13(b) is preferred since it isolates the setting logic from the state register itself. The practical implementation did not follow these guidelines but was a piecemeal project built up as a series of small logic modules. The actual logic details are not all that important, providing that the state diagram is faithfully implemented in the hardware.

A system diagram is shown in Fig. 14 to illustrate the component parts of the system – above and beyond the control logic.

While the heart of the system is the control logic, the most sensitive component is the VOX unit. The VOX unit employed was an adaptation of the solid state unit appearing in the 1972 edition of the ARRL Handbook. Minor modifications were made in the anti-VOX circuit to adapt its operation to this application.

The most difficult problem that had to be overcome was false tripping of the VOX circuit each time the transceiver (a Motorola W43GGV) switched from transmit to receive. The problem caused cycling – the unit would switch from transmit to receive to transmit to receive, etc. The problem was traced to the fact that dc microphone bias was being switched on and off. Removing

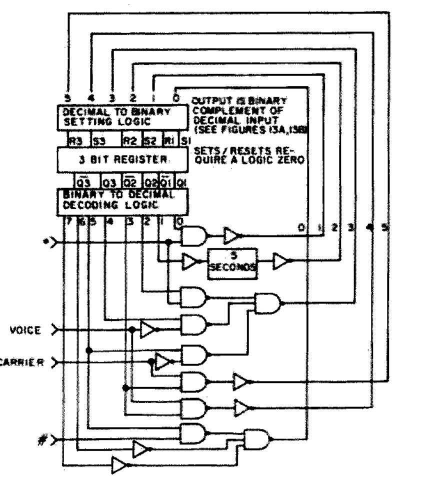

Fig. 12. Block diagram of recommended autovox system logic.

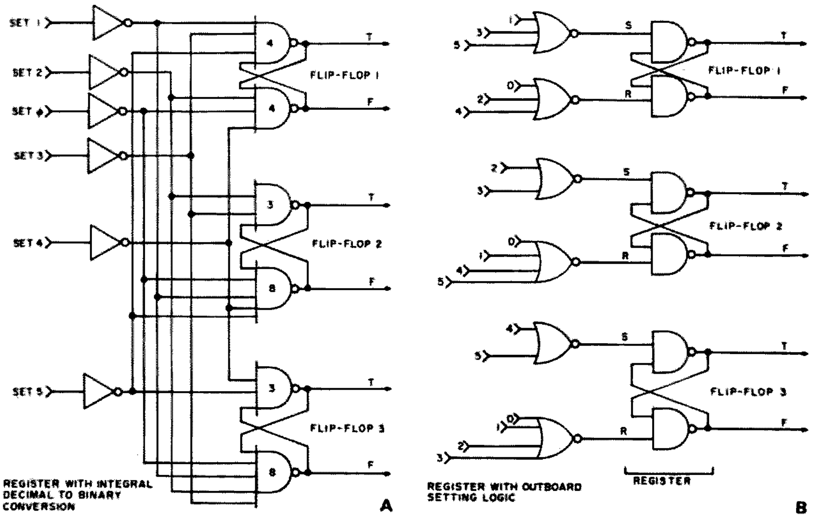

Figs. 13(a) and 13(b) illustrate two ways to implement the set logic and state counter.

the bias circuit, intended for carbon microphones, cured the problem.

The VOX circuit should have fast attack and slow release to be most effective. Employing some agc ahead of the VOX unit can be helpful in accommodating various speaking levels and telephone circuit conditions. The most serious operational characteristic occurs when the telephone party responds to questions too quickly, resulting in a missed or partial transmission – the result of the VOX attack time and transmitter keying time. The same problem occurs on conventional two frequency autopatch systems as well when the telephone party responds before the mobile user has had time to switch from transmit to receive.

The autovox patch is easy to use and can render service if a good VOX circuit is employed. The system's primary weaknesses include the variability inherent to VOX circuits and the fact that the mobile user doesn't have absolute control of the system (he must wait to grab control).

An Operational Time Division Autopatch on 27 MHz AM

To help in the investigation of a time division autopatch, the control logic shown in Fig. 11 was constructed using T^2L components derived from discarded computer circuit boards. Flip flop XA9 is the mode control flip flop and is representative of state 1. This flip flop is set either by a push-button switch, SW1, or upon receipt of the * character (tone detector outputs H_3 and L_1); it is reset by a push-button switch, SW2, upon expiration (momentary logic 0) of the 1 minute timer, or upon receipt of the # character (tone detector outputs H_1 and L_1).

The sampling process, i.e., looking for an incident signal, is accomplished by use of a 2-bit binary counter. The sampling process is actually sub-divided into four periods. Fig. 15 shows the actual sampling process. A unijunction timer is used to determine how frequently this process is performed – in the experimental system, several time periods were switch selectable between approximately two times per second and once every five seconds (the basic timer circuit is shown in Fig. 16). The rate at which the 2-bit counter was cycled was controlled by a separate UJT clock circuit controlled by a variable resistor to provide widely variable sample durations. Fig. 11 shows the frequency control timer as T_1 and the sample clock as T_2. The flip flop composed of gates XA13-3 and XA13-4 is representative of state 3. The flip flop composed of gates XA15-3 and XA15-4 is representative of state 2. Gates XA12-1 and XA12-2 decode the counter to determine when the receiver should be enabled. Gate XA12-2 decodes the second "receiver-on" period and thus generates the "SAMPLE" signal as well.

Gate XA11-1 produces an enable for the receiver under four conditions:

1. Sample period 1 or 2;
2. Carrier present on input;
3. Patch off;
4. Local mode and PTT button not pressed (gates XA10-2 and XA10-3).

Gate XA15-2 causes the flip flop composed of gates XA15-3 and XA15-4 to be set when a carrier is detected during the sample period. Gates XA11-2 and XA14-2 compose the transmitter keying logic – providing an enable under two conditions:

1. Local mode and PTT button pressed;
2. No sampling in progress and no incident carrier.

This logic was interfaced with modified Radio Shack Model TRC-4 100 mW CB transceivers that were interconnected with a simple phone patch. Reliable operation was obtained while wandering around the house carrying an unmodified TRC-4. For simplicity, one transceiver was used as the receiver and the other one, with PTT button wedged "on", was used as the transmitter.

Lots of experimental work was done to get reasonable response times. The transmitter was not modified – simply keyed on and off with a transistor switch in the power lead. The receiver required modification in the agc circuit to speed it up. Because of capacitor charge conditions, the receiver came on most *insensitive* and gradually increased its sensitivity. A transistor switch was added to remove the capacitor until a signal was detected and then replace it to control the amplification process and reduce distortion. A carrier detector was added to produce a dc voltage when a signal was detected. This signal was in turn amplified by op amps, passed through a Schmitt trigger, then to a monostable, for delayed dropout. The output of the monostable was the signal named CARRIER appearing in Fig. 11. This simple account over-simplifies the matter somewhat because receiver sensitivity was still somewhat deficient. This may have resulted from transmitter turn-off problems. Having no equipment other than a VOM, it was difficult to really study what was happening. Adequate equipment and a better electronic engineer could have no doubt worked wonders! But, the circuit did work – so well, in fact that on several occasions, I talked with my father over long distance circuits and he was totally unaware of the radio system's operation.

The radio party hears a "tick" each time the base station ceases transmission to look for a carrier; the telephone party hears only the received audio since audio gating is enabled only when a signal is present.

Just for the sake of proving it could be done, the control unit was connected to a stock Motorola W43GGV tube-type transceiver. By making the sample period very long, even a unit with PTT *relays* worked acceptably. While this is certainly not recommended, it would be interesting to attach a fully solid state unit employing solid state antenna and power switching (such as the Varitronics IC-2F). A suitably designed transceiver could no doubt vastly improve overall system performance by rapidly getting the transmitter squelched and the

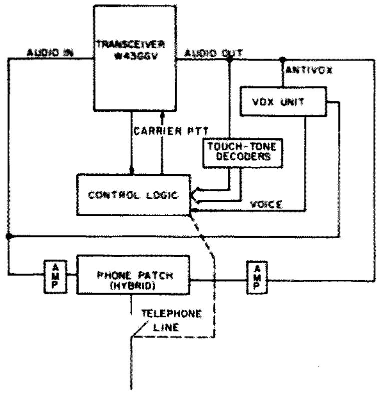

Fig. 14. Component parts of a practical autovox system.

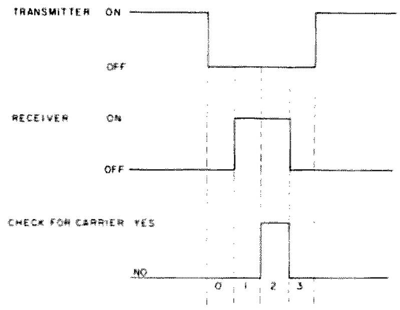

SAMPLE PERIOD COUNTER VALUE	ACTION
0	Transmitter off
1	Receiver on
2	Check for carrier
3	Receiver off

Fig. 15. Detailed carrier sampling process.

receiver up to maximum sensitivity.

The time division autopatch has many significant positive characteristics:

1. It is fully automatic;
2. Control is in the hands of the radio party;
3. It uses a single frequency;
4. It uses a single antenna with no need for a diplexer;
5. It requires no special phone line quality or telephone party conduct.

It also exhibits one significant negative characteristic – the base station must be

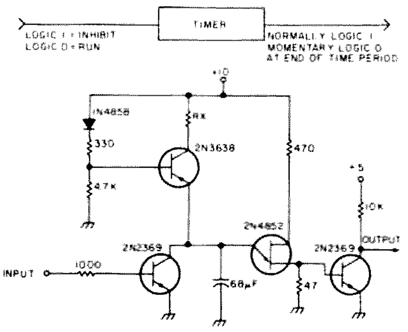

Fig. 16. Basic timer circuit.

able to switch from transmit to receive very quickly.

Conclusions

All of this thinking and work with single frequency autopatches came about because one Florida amateur, after reviewing my repeater system equipped with an autopatch, said to me, "It's too bad you can't build a single frequency autopatch." To Hank Bach, I say "Thank You." The thinking and researching have been rewarding. Maybe one of these autopatches, perhaps the time division autopatch, will be just what is needed to provide reliable half-duplex telephone service on a single frequency to thousands of mobiles already equipped with various types of standard transceivers.

Legality Considerations

The FCC's revised repeater rules are known to us all. This experimental system was designed to be fully automatic and reliable so that the need for a base station operator could be totally eliminated, while at the same time it halved the amount of frequency spectrum used (compared to conventional autopatch systems). The FCC has taken a dim view of "telephone only" repeaters, yet many repeaters exist mainly to support everyday telephone communications. So far as I know, a system such as the automatic VOX patch might be legal for the land mobile service although not for the amateur service. My interest has been in advancing the technology – not quibbling over rules and regulations. My goal has been met – it would, however, be enjoyable and encouraging to learn that the operation of such a telephone system for strictly non-commercial purposes and emergency communications was in fact permissible. There are many times each week that I would like to make a personal phone call to check on the family "milk" needs, and at the same time prove that the system is ready to render valuable community service in the event of an emergency. We can only hope that the FCC will recognize the merits of systems such as this one. Can you imagine the potential impact of a national single frequency autopatch system? In the meantime, 10-4 y'all! ■

EDITORIAL BY WAYNE GREEN

from page 24

Considering how things are going, it would seem prudent for all of us not yet active on CB to start looking around for a rig. We'll not only get the smokey clues which CBers are enjoying, but also get to meet some nice people who are solid gold prospects for ham licenses. You'll also find a lot more traffic information available to you while driving than you get through the local repeater . . . CBers outnumber the hams about 100 to 1 these days.

Remember back, you older timers, to when CB was first introduced. At that time a lot of us thought that this would be a great start for getting people interested in ham radio. The illegal type of operation, which the old rules promoted, made the 11m band a playground for the type of people we didn't need . . . and which would never be much interested in amateur radio where they would have to actually work to get a license. The present CB gang has engulfed the old high power bad language creeps and are, for the most part, quite decent people. Now, as the FCC manages to get licenses into CB hands, you even hear actual call letters beginning to replace handles!

We don't have to try to lick 'em . . . just join 'em and sneakily winnow out the best of the CBers and get them into our ham classes. It will be a painless . . . fun . . . missionary job.

Yes, I know . . . I can hear the old curmudgeons now . . . *73 Magazine* . . . the amateur radio and CB magazine. Go soak your heads . . . right after listening to CB 1976 and finding out what it is really like. My apologies if you find CB to be rotten . . . it isn't most places, but there are exceptions.

NEW 220 MHz CB BAND?

Despite the ads by NRI in *QST* and *HR* for their new 220 MHz CB synthesized rig, the FCC assures me that plans for this ham band to go CB are dead. Several readers wrote me about this obviously deceptive advertising, wondering how these magazines could run such an ad. Beats me!

While most of my past prejudices against CB have been overcome by recent developments, I'm not yet ready to cope with CBers on 220 MHz who are convinced that their NRI 500 channel digitally synthesized rig is perfectly legal.

We, as amateurs, do have to come to grips with CB as it is today. We need to understand what it is and how we can best relate with this. Letters are pouring in from all over the country telling me that ham clubs are having more and more success in converting the more intelligent and decent CBers into licensed hams. Bravo.

We also need to be wary. The renegade element which has moved above the 23 channels gets a wild hair every now and then and ventures above 28 MHz. This sort of trip should be stopped with every tool at your disposal. It will be a lot easier to stop now than when the sunspots start perking again and all sorts of rare DX become available.

One of the last things we need is an open invitation for CBers to jump unlicensed into a ham band. Hopefully *QST* and *HR* will correct the idea that there now is a 220 MHz CB band . . . and perhaps take a firmer stand with advertisers who try to run deceptive ads.

My thanks to the many readers who dropped notes to the offending magazines . . . WB2LEI, K7DBU, etc.

BOOK MAGIC

Have you ever started to get into some new phase of amateur radio, only to find that getting the information you want is a bear? You look through your back issues and find some info, but key articles are missing, and you end up spending enormous amounts of time trying to get what you need . . . and kicking yourself for not being more careful of those back issues.

One obvious solution to this misery is to go out and buy a book or two on said new interest so you'll have everything in one place. This is okay if you are into RTTY or SSTV, but a lot of other phases of amateur radio are not covered adequately by books . . . as yet. We're working on this problem at *73*, but we need help.

Publishing specialized books for amateur radio is not one of the all time lucrative efforts . . . which explains why there are not all that many books available. Yet, for the amateur who can write . . . and has a field of expertise . . . there is interesting spare time money to be made. If you are into any amateur specialty . . . say certificate hunting, for example . . . you could work this into one or two thousand extra dollars by contacting me and proposing a book on the subject.

The book series we are working on will all be around 100 pages of 8½" x 11" and sell for $1.95 through the stores. A good book will sell at least 10,000 copies, with some going up to over 50,000 . . . though that is unusual. While most publishers pay royalties on the order of 5%, we will be paying 15% . . . since we don't want to disturb our long-standing nonprofit way of life . . . ARRL is not the only outfit that can lose money year after year and grow nicely in the process. That means there would be a royalty of about 19.5¢ on each copy (wholesale price would be $1.30) . . . *or about $1950 on 10,000 copies.* It isn't a lot these days, but a little bit here and a little there . . . right?

If you can't think of any books to write, it is because you have been riding on the coattails of others. Books would be welcome on things like 160 meters, 75 DXing, contests, traffic nets, low noise circuit design, circuits of commercial amateur rigs (royalties on non-expert material have to be negotiated), buyer's guide to ham gear available, buyer's guide to microcomputer equipment and peripherals, updated index to surplus conversion articles, microwave equipment, getting on 450 MHz, ATV, FAX, intro to microcomputers, intro to common programming languages, mobile handbook, introduction to amateur radio, license manual, how to become a radio amateur, understanding amateur radio, radio fundamentals, amateur operating manual, learning the code, VHF manual, CB equipment guide, getting the most out of CB, things like that.

If you like the idea of some extra money and think you can turn out a good and interesting book, make an outline and send it in for an okay. Proven authors will get preference, of course . . . but this is an opportunity to get your feet wet . . . if you can hack it.

CASH BONANZA

Every now and then I get a letter from some reader sniveling about not being able to afford this or that piece of ham gear. The sniveling is getting even worse with the cost of computer systems running around $2000. My answer is simple . . . you have plenty of good training to make a lot of money in your spare time, so why sit around writing complaining letters to me when you could be out there raking it in?

The CB explosion is a case in point. It is getting tougher and tougher to make a buck selling CB equipment . . . you're in competition with discount stores and truck stops . . . outfits with relatively low overhead and enormous buying power. But remember that these days the big money is in service, not in selling . . . and service is one thing that CBers need . . . desperately.

You could set yourself up installing and servicing CB rigs and do very well in many areas. It is a business you could get started in your evenings and weekends. You'll be able to work in a good deal of accessory sales as part of your business, too . . . for most CBers will be willing to pay quite a bit to get rid of all that car noise . . . and you should be able to sell car security systems like crazy.

How do you get customers? Over the CB channels . . . with business cards at all sales outlets (offer a little kickback to the salesman if you get the installation job . . . make that a "commission") . . . ads in the newspaper . . . etc.

Speaking of car noise, I'm still hoping that somewhere out there at least one *73* reader has discovered how to quiet the deafening noise in a Datsun! Please give me a hint. My 280Z has to be heard to be believed and the local dealer says nothing can be done.

EDITOR NEEDED

73 has an urgent need for a ham in the editorial department. A background in both the technical and operating ends of the hobby will be advantageous . . . as will the ability to read and write. Fun job . . . fantastic area for living . . . reasonable pay . . . lots of hamming . . . excellent opportunity.

BYTE TROPHY

The Southern California Computer Society awarded a beautiful trophy cup to *Byte Magazine*. Here is Wayne Green, the originator of the idea for the magazine and the publisher who got *Byte* started, admiring the trophy.

be my guest

visiting views from around the world

from page 9

of the mode or special interest directly involved. I suspect that it is reasonable to say that those involved in a given mode are the closest we will have to experts in that mode, and therefore they should be the people to work out solutions, unless a specific problem arises between adjacent users of two or more different modes. Even then, it should only be those involved who work toward a solution. However, all findings on any problem should be disseminated to all representatives of all groups, so that meaningful dialogue between various special interest groups can be developed.

Another important input at this level would be that of our international neighboring nations: Mexico to the south and Canada to the north. Let's face the fact that transmitted rf energy rarely if ever observes international, or even state, boundaries. Since rf originating in our country affects them, and vice versa, we must develop the same lines of interaction and intercommunication with them in order to protect their rights and, in the end, thereby protect our own. Then too, we may very well gain from their technology — and that never hurts anyone. Most of all, we gain a good deal of international fellowship and good will by extending the hand of friendship to our neighbors, and this fellowship can only benefit us at the '79 WARC in Geneva. The friends we make now will be of definite benefit then, and in times to come thereafter

By this time I hope you have noted that the arrows connecting the different tiers and organizations in the diagram are all two way. I feel that this is extremely important in that all communication and interaction must be two way; all must work for each other and information disseminated at any level must be made available to all interested. The same holds true for all areas of the country, in that east can learn from west, north from south, neighbor nation from neighbor nation, etc. We must pool what we have already learned and what we will learn in the future so as to avoid repeating costly mistakes — the kind that make enemies out of amateurs who in reality should all be friends working arm in arm toward one specific goal: the future survival and growth of the amateur radio community worldwide. On each level we must break down the walls that now divide us, such as things like "license class bigotry," wherein amateurs of one license class profess superiority over others simply because they have passed a harder test. Or the walls of isolationism between amateurs due to the specialization of the mode in which they operate. I have always believed that it's not the license class you hold or what you are a specialist in that counts, but rather what you as an individual do with these assets and how you use them to benefit the entire amateur community. Though some may not like the realization, the times have changed swiftly for us and are everchanging. Unless he or she wakes up soon, the isolationist and the bigot will very soon be left out in the cold with no home and, even worse, no one to QSO with. It is for this reason that every special interest group must be represented, from the local council and/or workshop level to the statewide level. Now, where to from here?

Logically, one would think that from here we should go national and, while I agree, there are too many pitfalls. While on a local level it is fairly easy to hold meetings, as you progress up the scale distances between given points becomes a significant factor in both time and cost. On a statewide level things would still be quite tolerable, in that such statewide meetings could be held in conjunction with a major amateur radio convention. While admittedly it's an assumption on my part, I really feel that the kind of person who is politically motivated enough to garner election from his particular local council is the same amateur who rarely if ever misses a major amateur get-together such as a Division Convention or other major area happening. Therefore, scheduling meetings of a statewide organization to coincide with a major event such as a Division Convention would probably attract the necessary attendance.

When you speak of a national get-together perhaps twice yearly or even quarterly, you speak of big travel and time expense. This was brought home graphically to me just yesterday, when I learned that a trip Sharon and I are planning to New York later this spring will cost almost $700 for two round trip (coach) airline tickets. No one amateur or group of amateurs could be expected to cough up perhaps two grand per head per year travel expenses. Even if a group did, could you see trying to accomplish anything of value with 100 delegates, plus who knows how many advisors to each (figuring two delegates per state plus one alternate), crammed into one room in Newington? Why Newington? Well, aside from the ARRL, I know of no other organization capable of undertaking as large a job as this.

Therefore, some semblance of order must be achieved before chaos is permitted to develop. Here enters the areawide or regionwide council. Let's say that four such councils were established along time zone or other boundary lines, and that quarterly or semiannual meetings for these councils were established. Now you have quartered the numbers of people attending and minimized as much as possible the travel necessary — and thereby the associated costs. To areas such as Hawaii, Alaska and Puerto Rico, this would be a definite expense benefit.

This level would have two prime purposes aside from the aforementioned. First, it would act to develop lines of communication between its three peer organizations — to collect and disseminate information, and to solve problems between statewide organizations. It would not involve itself in local procedures and policies, as these would be left to the local and state bodies. In fact, its main purpose other than those already stated would be to act as a clearinghouse for information that would be presented from a given area to the heart of the entire body: the National VHF/UHF Spectrum Advisory Committee.

Let us now elect two delegates and one alternate from each Regional Area Council (and fund them with money prorated from dues collected at the lower levels), place them aboard their favorite mode of transportation, and send them off twice a year to the city of Newington, Connecticut. Their job would be the hardest: to analyze all aspects of VHF/UHF amateur operation on an ongoing basis and recommend changes that would benefit all spectrum users. To do this, they would need all forms of inputs and, as the chart notes, as many as possible are provided. First, the people whom they directly and indirectly represent will have given them basic direction as to what is needed. Second, the needs of neighboring nations must also be

Continued on page 136

More from the Son of a Gun

One of our more strung-out QRPers came up the hill last week, his voice ringing across the ridges, joy in his smile and happiness everywhere. A couple of us were just sitting around and we braced for the worst. "I did it," the QRPer was yelling, "I did it, I did it! This time I got one for sure and it has to be a real blockbuster for sure." We calmed him down to get the story out of him. "This morning, on the dawn path, I worked this AC8BT/AJ4. There was this big pileup of JAs fighting to work the station and I knew that it must be a real rare one. So I jumped in and worked him . . . got a five-eight-nine out of him, too. I don't know where it might be but with Sikkim gone I'm wondering if it might be one of those other Himalayan kingdoms, something around Tibet. It might even be China. What do you think?" Son of a gun, what could one say to something like this on a warm day, the sky blue and the flowering trees all in early bloom? We finally said, "We'll have to research this one and try to get a line on things," and the QRPer was off, jogging his way down the hill. The two of us sat in silence for a bit and finally the other spoke. "Why didn't you tell him that AC8BT/AJ4 is Al Hix from Charleston down in Puerto Rico to warm up a bit?" We were long in answering for there are enough of the dark days and this for now was a happy one for the QRPer. And at the end all we could say was, "Take from no man his dream." And there are yet those happy days in DXing and there will be more to come.

* * * * *

One of our more recent QRPers came by last week and he had a question. "Why are the older DXers always sitting around and talking about the good old days?" he asked. "Were things really all that good and were they really the Big Guns that they say they were?" We have often been troubled by this question ourselves, so we hauled the QRPer over to the Old Timer who listened to the question. "A man must preserve his self-esteem," the Old Timer said, "and some may tend to rewrite the remembrance of other days and other years. The years that are gone will always be the golden years. It comes to most everyone." Son of a Gun, you would have thought that the QRPer had all the answers he needed, but he persisted. "But did all those things really happen? Are all the things they say true?" And the QRPer waited for his answer until the Old Timer spoke again. "It may not be, but they believe. And what does it really matter?" And we had to leave it there, for nostalgia is the warmth of the old ones and the years will bring to everyone, eventually, the recollection of the good days that were, and a thought of some things that might have been, but never were. Always somewhere there will be someone whistling "Roses are Blooming in Picardy." And always next year will be the Big DX Year. ■

Reprinted from the West Coast DX Bulletin.

Autobiography of an Ancient Aviator

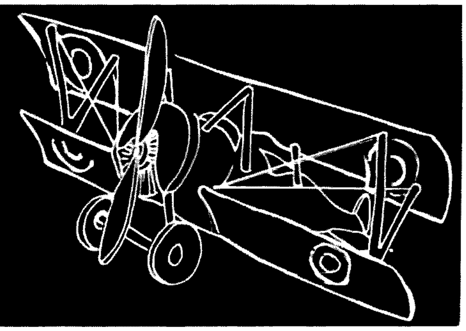

W. Sanger Green
1379 E. 15 Street
Brooklyn NY 11230

For a couple of months now I've been promising to tell you about an outstanding hunting trip that it was my privilege to be on. So here's the story.

In early November, 1928, Belin DuPont of Wilmington, Delaware, invited Bob Hewitt, (manager of the Ludington Philadelphia Flying Service), Victor Dallin (aerial photographer), Jack Thropp (manager of Trenton Airport), John Steffin (Philadelphia businessman) and myself for a week of hunting at the DuPont Combahee Plantation in South Carolina. As I remember it, the plantation consisted of about 10,000 acres situated near the mouth of the Combahee river, about halfway between Charleston (of horse diaper fame) and Savannah. Bob Hewitt made arrangements with Townsend Ludington for the use of his flying service's new six passenger Travelair for the trip. We were scheduled to depart on Saturday, November 24th, but, due to my late arrival that day from my trip to Wichita, our departure was postponed to Monday. So Monday morning we loaded our gear and cut cards to see who would drive to Raleigh on the first leg of our 600 mile trip. I cut the high card so we got under way. The weather was cold with rain and sleet, but the weather report was for warmer temperatures to the south. However, a few minutes after takeoff we began to take on quite a little ice. By that time we were nearer Bellanca Field (near New Castle, Delaware) than Philadelphia, so I set the ship down there. We had so much ice onboard that I had to land at about half throttle. The Bellanca boys put our ship in their heated hangar, so in about an hour the ice melted off. Also, weather had improved considerably, so we were on our way again. The rest of the trip was routine. The plantation had its own landing strip, which was well marked. We made it just before dark.

Combahee Plantation was beautifully organized for hunting parties. There was a choice of deer, duck, quail or pheasant hunting. In the evening, after dinner, the guests would meet with the plantation manager and each plan his next day's hunting. Breakfast was at 0500, so the duck hunters could be in their blinds with their live decoys in place well before daylight and the deer and bird hunters could be in position. There were plenty of guides. One went out with each duck hunter, taking him to his alloted blind by boat, anchoring his live decoys in the proper places, retrieving the birds he shot, and bringing the hunter, bag and decoys back to the big house when the morning flight was finished. The deer hunters were posted along a trail, and beaters with whistles, horns and bells would form a chain and drive the deer toward the hunters. The field hunters each had a guide and a retriever. Gold plated hunting – What? The meals, of course, were marvelous. We were there for five days and arrived back at the Philadelphia airport on 1 December with some 18 quail and pheasants, 35 ducks, one small deer, and an unrepayable debt to Belin DuPont.

When I got to my week's accumulation of mail the next Monday, I found one letter from Washington giving me a $400 a year raise, and another one advising me that I was transferred to Kansas City as of 1 January 1929, to be in charge of the Central Region. I didn't like the idea of moving so far away from our farm in Bethlehem, New Hampshire and from all my friends in the East.

When the Ludingtons learned of my pending transfer, they offered me the job of building and managing an airport on land they owned near Camden, New Jersey. The salary they offered me was about double my Dept. of Commerce pay. In addition they offered to rent me a house they owned in Pennsauken, N.J. (near the airport site) for about half the going rate. So who could refuse? The frosting on the cake was that they would like to have me pinch hit as a pilot for the Ludington Philadelphia Flying Service when needed. I took my resignation to Washington as soon as I could get it off the typewriter.

Washington offered to let me stay at Philadelphia at the new salary, but I had to refuse. After all, the reason I joined them in the first place was to find a worthwhile job in commercial aviation.

First thing Ludington wanted me to do was to make an inspection tour of the more active airports in the U.S. and see how they were doing things, their problems, and get any ideas that would be of value in building Central Airport at Camden.

I was already familiar with the airports in my old territory and around New York, so I started my itinerary with a visit to Lt. Duffy at Buffalo Airport. Then, next day, on to Major Berry and his Cleveland Airport. Then I traveled by train at night and made one day stops at Detroit (Ford Airport), Chicago's Midway, and St. Paul Airport. While in Detroit I contacted a friend who was a "revenue agent." He very kindly drove me around and, before I left, gave me six bottles of very fine confiscated (he called it "liberated") Scotch. Those were prohibition years. Remember? I spent the weekend on the choo choo from St. Paul to Salt Lake City. Time to relax and get caught up on my reports. Not much to see at Salt Lake, so I caught the midday train for Oakland, California. Ed Mouton met me at the Oakland Airport and ferried me over to the San Francisco Airport at San Bruno in his "Deep de Com" plane. Roy Francis showed me around his 'port, bought me dinner, and put me on the train for Los Angeles. I spent the weekend looking in on C. C. Mosley at Grand Central, Maj. Barnitz at Inglewood and the L.A. Metropolitan Airport at Van Nuys. I only had two bottles of Scotch left by then, so I climbed on the rattler for Kansas City. A couple of days enroute and another two in K.C. and I was ready to go on to St. Louis.

While I was in K.C. I heard that air transportation to St. Louis was available the next morning. I can't remember the name of the carrier but I remember buying a ticket and being the only passenger in a 4 passenger Ryan. The ship had dual controls so I sat up front with the driver. He told me he had just started work for the line and that this was his first trip over that route. I told him that I had been over the route a couple of times the month before under similar conditions and I thought that, between us, we should have no trouble. I suggested that he take a 100° course until we came to the Missouri river then, if it was still snowing and the visibility wasn't too good we could follow the river right down to Lambert Field. That's what we did – and arrived a few minutes ahead of schedule.

I had a nice weekend in St. Louis. Those people certainly know how to entertain visiting firemen. In Cincinnati I caught up with a couple of old friends at Lunken Field: Ed Conerton and John Paul Riddle. Paul was running the airport and the Embry-Riddle Airline. Ed had landed the "Voice From The Sky" Fokker trimotor there the day before and the heavy sound equipment it carried was enough to break its back in landing. So I spent an extra day with them before climbing on the night sleeper for Philadelphia.

Next month: Building Central Airport and small airline flying.

Hunters' arrival back at Philadelphia Airport, 1 December 1928. Left to right: Vic Dallin, John Steffin, Bob Hewitt, Jack Thropp, Sanger Green. Photo by Dallin Aerial Surveys.

by Wayne Green W2NSD/1

I/O EDITORIAL

BILLIONS ... BILLIONS!

It isn't often that we can see quite so clearly a new market that is inevitably going to burgeon. Usually, when you can see something like this coming, you can use the information to make some money ... like investing in Haloid just before it became Xerox. The coming explosion in computers ... which will dwarf the already well-known computer growth ... does not give us any clear insights into turning a fast buck, but it certainly can be used to advantage.

I've already suggested that amateurs, by virtue of their head start in electronics, will have a decided advantage if they want to get into the sales or service of small computer systems. This is still a bit in the future, despite the opening within the last few months of a couple dozen computer stores around the country. Right now most computer stores are serving hobbyists rather than small businesses. This is primarily because to date there are really no practical small business systems available, only hobby systems. But business systems will be along ... and shortly.

How much of a business will there be? I would think we could expect at least a $50 billion a year volume ... and that probably is conservative. When computers get down to the $250 to $500 range, and they will soon, you will be seeing them everywhere ... on every desk at school ... every desk in every office ... in every small business or store ... in every home. They will be used for writing letters (most of which will eventually go via cable or satellite), keeping records, ordering from the store, billing, keeping bank records, teaching, games, art, music composition, newspaper replacement, etc.

If you are not really interested in getting into manufacturing or sales, you may want to look for investment in firms which are getting into these fields. While it is still too soon to get even a faint idea of how the pioneers in the field are going to do, you could do worse than keep a good eye peeled for up and coming firms.

uP AND AMATEUR RADIO

For some reason I've had a lot less static about the coverage of computers in *73* than I expected ... less than when I got started on FM and repeaters some years ago. While I recognize that a great many readers understand the impact that computers are going to have on amateur radio, still I also realize that despite our efforts to keep the readership of *73* confined to active and progressive amateurs, some spark-forever types are bound to have infiltrated.

Just as many amateurs reacted violently to transistors, refusing for years to accept that they were here to stay (see the *QST* George Grammar editorials in the mid-60s). I expect this same reaction to the revolution microprocessors are bringing us. The idea of a small PC board with a few chips being able to replace very complex electronic systems is going to take some getting used to.

How can an old timer (of any age) get used to a tiny computer system which can be used to change typing into Morse code, into RTTY, for editing text to be typeset, for playing games, for teaching almost anything, for keeping a mailing list, for running a repeater, or for just about anything the mind can imagine? It is almost too big a step to really comprehend. Just by changing the programs in their computers, two amateurs can use their systems to communicate by Morse, RTTY with Baudot code, RTTY with ASCII code, or any other agreeable system. With a slightly different program the system will see what code is being received and cope with it automatically. Pity the old timer.

Since I'm as new at all this as you are, I'll be trying to bring you articles which will help us to learn ... and as I begin to understand more of what is going on I'll try to keep you in touch. These new, relatively inexpensive, computer systems are a quantum jump for us, so we've got our work ... and fun ... cut out for us.

CONVENTIONS

The computer hobby field is getting big enough so they are already starting to hold conventions. An unusually high percentage of the computer hobbyists seem to also be radio amateurs, so you might find an event like this fun.

The first such convention, run by MITS at their plant in Albuquerque, is scheduled for the end of March ... as this issue goes to press. I'm planning to be there and report on this convention. The next one is May 2nd in Trenton, New Jersey and is being organized by Al Katz K2UYH, a well known UHF pioneer and Oscar addict. I'll try to be there and report on that meeting, too. More than a thousand hobbyists are expected to attend. There will be manufacturers' exhibits, prizes, demonstrations of hobby systems, plenty of technical talks and a flea market. Write Trenton Computer Festival, Trenton State College, Trenton NJ 08625 for details.

THOSE BUGBOOKS

It would take two or three years to publish as much really good info on TTL circuits as is covered in the *Bugbook* series. The real pity of it is that all of the information in these fat books is utterly fascinating and *should* be published in *73*. This is just exactly the kind of material that every ham either wants to have or else should want to have.

Bugbook I starts right out with the basics of TTL circuits and chips, explaining how they work and how more complicated circuits are put together with the IC building blocks. The books are split about half and half ... theory and practical experiments which you can hook together and see work. The experiments use inexpensive test jigs and commonly available (and inexpensive) ICs.

Look, I can't tell you what to do ... if I could I would flatly insist that you get this series of books immediately and stop horsing around trying to avoid keeping up with progress ... and trying to save a buck by making do with a couple chintzy magazine subscriptions. Oh, I do the best I can to bring you stuff like this in *73*, but there is just too much and you need it now, not in the two or three years it would take for me to get the material separated into articles and published ... by which time it would probably be out of date.

Let me put it this way ... the whole series of four *Bugbooks (I-II-IIa-III)*, which costs $36.85, will take you from beginner through microcomputers, complete with the fundamentals of programming ... something you are going to have to learn eventually. This is a fun way to get into this, since it takes you step by step all the way through with experiments you can make.

If you want to be a cheapskate about this you can start out with the first two books for $16.95 and cover the TTL part of the digital experience. But be warned that I have no intention of letting up on you until you have the whole set and are able to read relatively sophisticated articles on microprocessors in *73* ... and know what you are reading.

The drops in hardware costs will come from a combination of the benefits of mass production ... note that you can buy a brand new black and white television set for under $100 as compared to a far simpler slow scan television monitor at $250 ... and further IC developments. One IC video generator will undoubtedly replace the 50 IC generators of today ... and soon.

Teleprinters probably won't be coming down as rapidly as TVTs, due to the mechanical complexity. They will be about as expensive as typewriters in all probability. However, it is quite possible that they will become obsolete if a simple system of developing hard copy directly from the TVT tube is worked out. Some TVT units already have a Xerox type of copy system, though they are not cheap.

When some sort of direct computer-to-computer communications system does develop ... possibly based upon the ultra-cheap late night telephone rates which would permit a computer to call any other and leave a "letter" which could be read at the recipient's convenience ... this might be the salvation of the forgotten consumer as far as mail delivery is concerned. It would at least get us away from those big thick envolopes full of brightly colored gasoline company offers of overpriced junk ... or would it? We may well have full color TVT systems and still find those darned junk mail offers filling our morning TVT screens. The more things change, the more they stay the same, to coin a phrase.

And will the chap with the "Plaid Box" of the future be able to dump mail into a hundred thousand homes in one night via Ma Bell's lines? ... and for free?

POSTAL DISASTER

With first class mail looking to go to 17¢ by next year and to around 25¢ in a couple of years beyond that, some viable alternative is a must. The post office is already spending money (though not in *73*) to try and get people to send letters as a result of the drastic drop in mail use brought on by the 13¢ letter. There is also talk of a three day postal week.

Continued on page 119

SEE PAGE 128 FOR 73'S COMPUTER INFO

George R. Allen W1HCI
80 Farmstead Lane
Windsor CT 06095

Two Finger Arithmetic

-- how computers figure

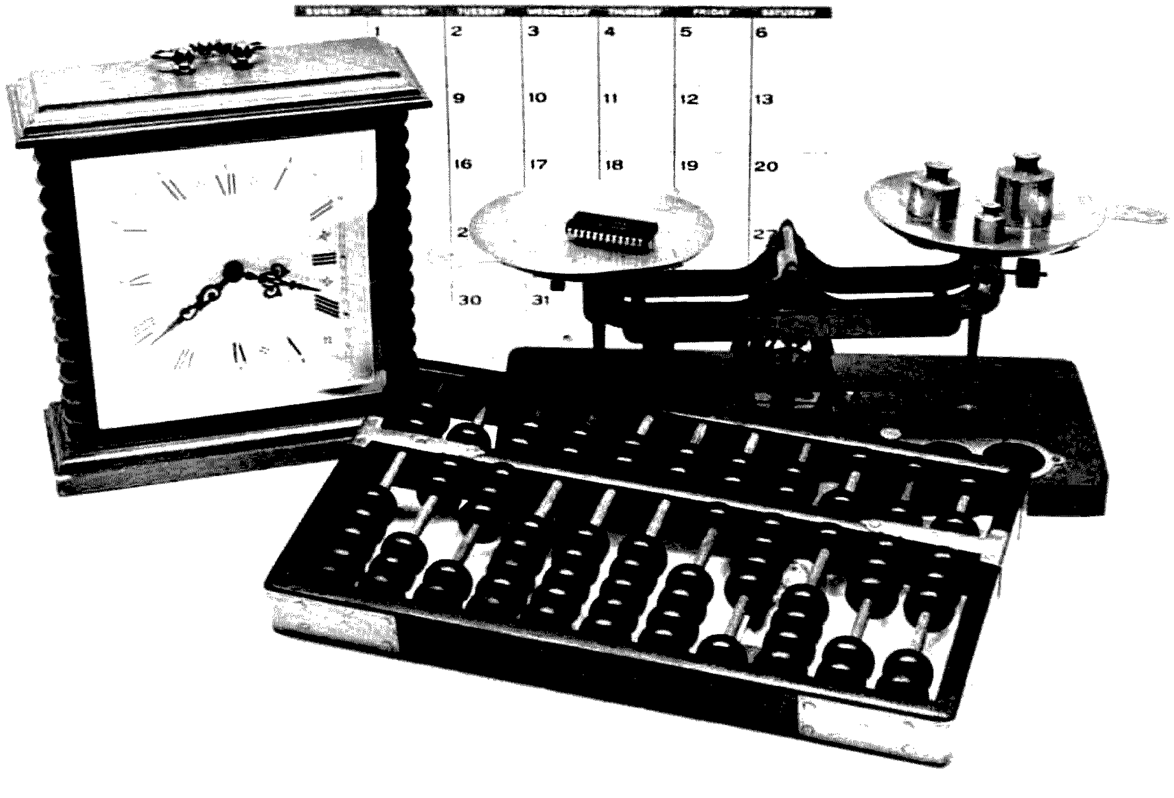

We are not aware of all the number systems we use daily, as represented by the items shown here.

The first caveman, when he learned how to count on his fingers, gave us the decimal number system which we use today. While this number system is second nature to us, it is not the only number system with which we come into contact every day. Timekeeping, for example, uses a unique numbering system which is based on the numbers 60 and 24. There are 60 seconds in a minute, 60 minutes in an hour, and 24 hours in a day. And of course, the English have blessed us with unique number systems for weights and measures — who can forget that 4 gills = 1 pint, 2 pints = 1 quart, and 4 quarts = 1 gallon? If you stop to think about it, you can see that we are involved with many number systems other than the decimal system.

The advent of the computer age has ushered in an additional number system, the binary system based on the number two. This system has come into common use since digital computers can represent information in one of two states — "on" and "off." These two states are called "binary" states and are the basis for the binary system which we use in digital computers.

Man commonly works with the decimal system, computers operate with the binary system, and the obvious questions are "How do we get from one system to the other?" And, "How do I represent information in a computer?" This article answers these questions and in addition explains how to do simple arithmetic in the binary system.

The Decimal System

We are constantly thinking numbers, adding numbers, and writing down numbers; but, do we really have an understanding of what we are doing? When we write down a number such as the number 3187, what does it really mean?

All numbers are made up of a series of digits. A number can have as few as 1 digit and is not limited to any maximum number of digits. In the decimal system, each place occupied by a digit has a power of ten associated with that place. For example, in the number 3187, we have four places. The powers of 10 associated with the four places are as follows:

digit	3	1	8	7
power of 10	10^3	10^2	10^1	10^0

The number 3187 could be written as the following sum:

$$3187 = 3\times10^3 + 1\times10^2 + 8\times10^1 + 7\times10^0$$

and if we remember our basic mathematics we will recall that

$$10^3 = 10\times10\times10 = 1000$$

$$10^2 = 10\times10 = 100$$

$$10^1 = 10$$

$$10^0 = 1$$

(By definition, *any* number to the zero power = 1.)

When we write the number 3187 we are saying that we have 3 thousands plus 1 hundred plus 8 tens plus seven units (or ones). Similarly, larger numbers such as 5197283 may be represented as

$$5\times10^6 + 1\times10^5 + 9\times10^4 + 7\times10^3 + 2\times10^2 + 8\times10^1 + 3\times10^0$$

The Binary System

Computers operate with the binary system because each digit can have only one of two states — "on" and "off." Numbers are represented in a computer by a string of binary digits called "bits." Consider a number represented by 4 binary digits (bits) when off = 0 and on = 1. Four lights may be used to display the "on" and "off," or one and zero respectively:

number	on	off	on	on
numerically	1×2^3 +	0×2^2 +	1×2^1 +	1×2^0

We know that

$$2^3 = 8 \qquad 2^1 = 2$$

$$2^2 = 4 \qquad 2^0 = 1$$

Our number represented by the lights above would be

$$1\times8 + 0\times4 + 1\times2 + 1 = 11_{10}$$

Instead of actually writing down lights to indicate the "on" and "off" states, we use the binary numerals 0 and 1. Thus in base 2 our number is written as 1011_2. If it is very clear that you are working with binary numbers, you may omit the subscript 2.

Conversion from Decimal to Any Base

Conversions from a given base to the decimal system can be made by expanding a number to the powers of its base (as shown in the previous section). But, how do we take a decimal number and convert that number to another base? The technique used for this type of conversion is the technique of successive remainders. As an example, convert the decimal value 43 to base two:

$2\overline{)43}$ = 21; 42; remainder 1 is the multiplier for 2^0

$2\overline{)21}$ = 10; 20; remainder 1 is the multiplier for 2^1

$2\overline{)10}$ = 5; 10; remainder 0 is the multiplier for 2^2

$2\overline{)5}$ = 2; 4; remainder 1 is the multiplier for 2^3

$2\overline{)2}$ = 1; 2; remainder 0 is the multiplier for 2^4

$2\overline{)1}$ (doesn't go) remainder 1 is the multiplier for 2^5

Our number expressed as powers of two is $1\times2^5 + 0\times2^4 + 1\times2^3 + 0\times2^2 + 1\times2^1 + 1\times2^0$ or 101011_2. Checking ourselves and converting back to decimal, $1\times2^5 + 0\times2^4 + 1\times2^3 + 0\times2^2 + 1\times2^1 + 1\times2^0 = 32 + 0 + 8 + 0 + 2 + 1 = 43$.

Binary Arithmetic

Arithmetic in the base two is very simple. You don't have to remember a lot of arithmetic facts; all you have to remember is zero + zero = zero, one + zero = one, and one + one = ten. As an example:

$$\begin{array}{r}1\\+0\\\hline 1\end{array} \quad \begin{array}{r}0\\+1\\\hline 1\end{array} \quad \begin{array}{r}0\\+0\\\hline 0\end{array} \quad \begin{array}{r}1\\+1\\\hline 10\end{array}$$

With binary arithmetic, whenever two or more ones appear in a column to be added there will be at least one carry bit added to the next left digit. For example, in adding

$$\begin{array}{r}11\\+\ 1\\\hline\end{array} \quad \text{right digit} \quad \begin{array}{r}1\\+1\\\hline 10\end{array}$$

carry bit

we get

carry → 1

$$\begin{array}{r}11\\+1\\\hline 0\end{array} \quad \text{and then} \quad \begin{array}{r}11\\+1\\\hline 100\end{array}$$

Storing Numbers in a Computer

When we talk about numbers stored in a computer, we don't normally speak of them in terms of bits (binary digits); we usually speak of them in terms of bytes or

words. A byte by definition is a collection of sequential bits. A byte can be any number of bits but is most commonly 8 sequential bits. A computer word is a collection of bytes and is defined as the number of bytes pointed to by one addressing operation in a computer. Words and bytes tell us about the organization of the computer. As an example, assume the standard definition of byte, where byte = 8 bits:

> The XDS Sigma 6 computer is a "32 bit" computer; it has 32 bits per word. 32/8 = 4, thus there are 4 bytes per word.
>
> The DEC PDP 11 series of computers have "16 bits" per word. It has two bytes per word.
>
> The INTEL 8080 microprocessor is an 8 bit microprocessor; it has 8 bits per word. Thus it has one byte per word.

The term byte is used very frequently as the definition for a unit of information. Alphanumeric characters (letters, punctuation, printable characters, etc.) are usually stored in coded form in "one byte."

Numbers written on paper are stored in visual form and for all practical purposes there is no limit to the size of the number on paper. In a computer, there are limits set, due to the "word size" and due to the arithmetic capabilities of the computer. In large scale computers, it is possible to work with very large numbers such as those which can be represented in 64 bits or more. In microprocessors, however, the limit is very small, usually being 8 bits but in some cases being 4 bits. The arithmetic capability that we are talking about is the type of arithmetic which can be performed in one computer instruction. It is possible to string instructions together and thus handle larger numbers. This is usually done by "software."

Computer Arithmetic

As previously mentioned, computers have limits set on their arithmetic capabilities. They cannot in a single instruction perform simple arithmetic on all size numbers; they are limited to performing arithmetic on some given number of bits. Because of these limitations, computer arithmetic is somewhat different from binary arithmetic. Computer arithmetic is binary arithmetic within limits.

A typical microprocessor, such as the Intel 8080, has 8 bit arithmetic capability. It can perform arithmetic on 8 bit numbers. It cannot in a single instruction operate on a 32 bit number.

The largest number that can be expressed in "8 bit arithmetic" can be determined as follows: Consider an eight bit binary number such as 11111111_2, all one bits in the eight bits. The number can be expanded as $1x2^7 + 1x2^6 + 1x2^5 + 1x2^4 + 1x2^3 + 1x2^2 + 1x2^1 + 1x2^0$, which is the same as $128 + 64 + 32 + 16 + 8 + 4 + 2 + 1 = 255_{10}$. This is the largest number that can be stored in a single 8 bit word (or byte) and also the largest *sum* that can be accumulated from the addition of two numbers. We can add $250_{10} + 5_{10}$ and get a sum of 255, but we cannot add 250_{10} and 6_{10} to give 256_{10}, since that sum is beyond the arithmetic capabilities of 8 bit arithmetic. Of course this arithmetic restriction only applies to a computer with 8 bit arithmetic. If the computer used 4 bit arithmetic or 32 bit arithmetic, then the actual largest number would be different. In a four bit arithmetic microprocessor, the largest number would be $1111_2 = 1x2^3 + 1x2^2 + 1x2^1 + 1x2^0 = 15$.

In order to simplify the examples, all discussion in this section will pertain to a microprocessor or computer with 8 bit arithmetic capability.

If our microprocessor can handle eight bit arithmetic and can also store sums up to 255, then what is to prevent us from attempting to add two numbers that will produce a sum greater than 255? The computer doesn't know what the sum will be before the addition, so we can at least make an attempt. The answer is, "Yes, you can instruct the computer to perform the addition, but the results will be wrong." An *overflow* condition will result. The storage capabilities and the arithmetic capabilities of 8 bit arithmetic will be exceeded. What happens is analagous to trying to pour 3 quarts of water and 4 quarts of water into a five quart container. The container will overflow.

Subtraction and Negative Numbers

Most microprocessors available today have subtraction capabilities; however, the microprocessor user may or may not wish to use those subtraction capabilities, depending on the capabilities available. The user may wish to "complement" the number to be subtracted and then perform an addition, so that the arithmetic techniques may be simplified. Two types of computer arithmetic will be discussed in this article – ones complement arithmetic and twos complement arithmetic.

Both negative numbers and subtraction are used in a computer, but not necessarily in the same manner as with pencil and paper. In order to indicate a negative, instead of writing down a minus sign on paper a "sign bit" is set to "one" somewhere in the computer. This "sign bit" may be stored in a word by itself or it may be stored in the same word in which the number is stored. Most commonly, the "sign bit," which indicates a negative number, is stored with the number itself in the leftmost bit position of the word. In an eight bit word, the sign bit would be as shown:

Sign bit x x x x x x x x

In a sixteen bit word the sign bit would still be the leftmost bit as:

Sign bit
↓
x x x x x x x x   x x x x x x x x

If the sign bit is a "0", then the number stored in the word is positive. If the sign bit is a "1", then the number stored in the word is negative.

The maximum range of numbers which can be represented in an eight bit computer would be as follows:

Sign bit
↓
0 1 1 1 1 1 1 1 = 127_{10}
(Most positive value)
0 1 1 1 1 1 1 0 = 126_{10}
.
.
.
0 0 0 0 0 0 1 0 = 2
0 0 0 0 0 0 0 1 = 1

0 0 0 0 0 0 0 0 = ZERO

1 1 1 1 1 1 1 1 = -1
1 1 1 1 1 1 1 0 = -2
.
.
.
1 0 0 0 0 0 0 1 = -127_{10}
1 0 0 0 0 0 0 0 = -128_{10}
(Most negative value)

In an 8 bit word we have defined one bit as the sign bit, leaving 7 bits for the data. This means that the largest number including sign that can be stored in an 8 bit word is 127_{10}. This puts a further restriction on arithmetic operations as can be seen by the example, 64 + 64.

	64 in binary	= 01000000
+	64	= 01000000
		10000000

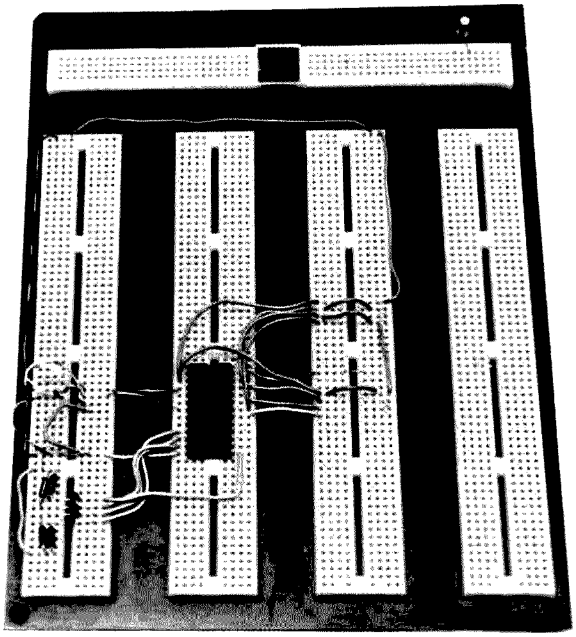

"Hands on" experience in computer arithmetic using a 74182 IC will be the subject of the next article.

By definition, we now have a negative number! We have changed the sign of our number. As can be seen, the right combination of numbers added together will not produce overflow, but will change the sign. Thus, it is also important to test to see if the sign is changed when performing addition on numbers of like sign. If the sign has changed, the 7 bit capability has been exceeded.

In computer logic, it is easy to complement a word such that all ones become zeros and all zeros become ones. This capability is usually a standard feature within the arithmetic-logical unit of a microprocessor. The complement of the eight bit binary number 01001101 would be 10110010. The number 3 represented in 8 bits is 00000011, and the complement of three would then be 11111100. This type of complement where zeros are exchanged for ones and ones are exchanged for zeros is called "ones complement."

By complementing a number using the "ones complement," we have placed a 1 bit or a sign bit in the leftmost bit of the word, indicating that the number stored in the word is a negative number. A typical ALU will complement a word internally, and then perform addition in order to effect subtraction. This might happen as follows, for the operation 7-4:

7 in binary = 00000111

4 in binary = 00000100

The ones complement of 4 (negative 4) = 11111011. Adding the two together,

```
    00000111
    11111011
  1 00000010₂ = 2₁₀
  ↑
carry bit
(overflow)
```

But the answer is off by one and overflow has occurred. We got an answer of 2; the answer should have been three. This is the shortcoming of ones complement arithmetic, and is the reason all modern computers use twos complement for arithmetic operations and representing negative numbers.

Twos Complement Arithmetic

Twos complement arithmetic operations can be found in all present-day computers, from the lowly 4 bit microprocessor all the way up to the giant large scale systems. The reasons will become evident as we go on and see how effectively negative numbers can be represented in this form.

To find the twos complement of a number, take the ones complement of the number and *add 1*. For example, find the twos complement of 6:

6 in binary	= 00000110
ones complement of 6	= 11111001
add 1	1
twos complement	= 11111010

This value (11111010) represents a *negative six*. Therefore, we can say that when we take the twos complement of a positive number we are changing it to a negative value. To best illustrate that this value is in fact a negative six, let us increment it *six* times (up to zero):

11111010	Negative six
+ 1	
11111011	Negative five
+ 1	
11111100	Negative four
+ 1	
11111101	Negative three
+ 1	
11111110	Negative two
+ 1	
11111111	Negative one
+ 1	
1 00000000	ZERO

Carry discarded

Following are some examples of *subtraction* in twos complement arithmetic:

1. 6-5

5 in binary	= 00000101
ones complement of 5	= 11111010
add 1	1
twos complement	= 11111011

Summing,

6 in binary	= 00000110
twos complement of 5	= 11111011
	1 00000001

A carry is produced, but is discarded. The sign (most significant bit) is zero, indicating the result is positive.

2. 3-3

3 in binary	= 00000011
ones complement of 3	= 11111100
add 1	1
twos complement	= 11111101

Summing,

3 in binary	= 00000011
twos complement of 3	= 11111101
	1 00000000

And, the correct answer is, of course, zero.

3. 3-4

4 in binary	= 00000100
ones complement of 4	= 11111011
add 1	1
twos complement	= 11111100

Summing,

3 in binary	= 00000011
twos complement of 4	= 11111100
	11111111

The result is negative one in twos complement (no carry produced).

In twos complement arithmetic, the addition of two numbers of opposite sign will always produce the correct result. It may or may not produce a carry. The carry or overflow may be ignored.

Notice that, in both ones complement arithmetic and twos complement arithmetic, addition stays the same. The only thing that is changed is the way in which the complement is taken in order to effect subtraction. Some ALUs will compensate automatically for subtraction in ones complement arithmetic, while some won't.

In twos complement arithmetic, the programmer should test for overflow. In any addition of like signed numbers where there is a possibility that the maximum sum could be exceeded, a test must be made for overflow. If the test is not made, there is a danger that erroneous results could occur and that the user might not be aware of that fact. In reality, any addition could produce overflow. While the user may never expect overflow to occur, if his data were erroneous, then an erroneous sum could result. By making the test for overflow under all conditions, those errors "which couldn't possibly happen" would be detected.

All of the examples given here used 8 bit arithmetic to simplify the examples, but the principles and concepts discussed hold true regardless of the arithmetic word length used. On a 32 bit machine, larger numbers can be handled, but the test for overflow (carry) and change of sign must still be made.

Arithmetic Software

Binary arithmetic within a computer is not difficult or mysterious; however, care must be given to making sure that the results obtained from an arithmetic operation are correct. The care required can add additional steps to a program and can conceivably make a simple problem into a lot of work. One way in which some of the work can be eliminated is to choose a microprocessor which provides an automatic "hardware" scheme for testing for overflow or change of sign. Another solution is to choose a microprocessor which provides the same capabilities by software. Software in this case is a program furnished by the manufacturer to do the proper testing for you. This software may also offer the capability to work with 16 or 32 bit numbers and may in addition offer other capabilities such as multiplication and division.

The Next Step

This article avoided some of the more difficult arithmetic operations, such as multiply and divide, in order to dwell on some of the fundamental concepts needed to get "on the air." Multiply and divide can wait for later. If they are needed now, the user can perform successive additions or subtractions as required, or he can use software provided by the manufacturer. These functions will be covered in a later article. It is important at this time to give the experimenter "hands on" experience with computer arithmetic so that experience and confidence can be built up. For this reason, the next article will describe simple experiments with computer arithmetic using a 74181 Arithmetic Logic Unit. These simple experiments will use the concepts discussed in this article and will help the experimenter to better grasp computer arithmetic. ■

Those Exciting

Joseph C. Fowler
GTE Lenkurt Demodulator
Assistant Editor

Data processing systems have revolutionized our world, allowing vast amounts of information to be stored, exchanged, updated, and utilized in ways undreamed of a few years ago. A chain of department stores can be tied together, for example, by a data network making current inventory, personnel and credit information instantly available at widely separated locations; a railroad can control activity at its switchyard from a control center hundreds of miles distant; switching functions within a telephone company office can be accomplished rapidly and reliably in accordance with stored program instructions. The information involved in each of these examples is different, but the underlying processing principles are the same.

A digital computer or data processor of any type is basically a stored-program machine, in which a memory facility holds a set of operating instructions — the system program. Information is put into a digital format and fed into the machine, which retains it in a data memory. The instructions in the program memory, which are also in digital form, tell the processor what problem is to be solved, or function performed, related to the input data. When the operations demanded by the program memory have been completed, the data is fed out to be utilized in some manner. In practice, program instructions are often stored within the same memory facility as the data; in this way, the program can also be changed if desired.

Despite surface differences, the ways in which memory facilities receive, hold, and feed out information are all based on either sequential or random access principles.

Sequential Memories

The sequential, or serial, memory method requires that the data bits comprising the information be arranged in a particular order. Data stored in this manner — including both programmed instructions and input information — is retrieved strictly in accordance with its position in a time sequence.

A simple example of sequential memory storage is paper tape, which uses the presence or absence of holes to indicate the condition of a data bit; the combined states of several bits identify a particular digit (see Fig. 1). The tape is moved through a sensing device to convert the hole patterns into a series of pulses for electronic processing. Each piece of information is retrieved as it passes the sensor. Another form of sequential memory storage is magnetic tape, which stores information as magnetic flux variations corresponding to the 1s and 0s of digital data.

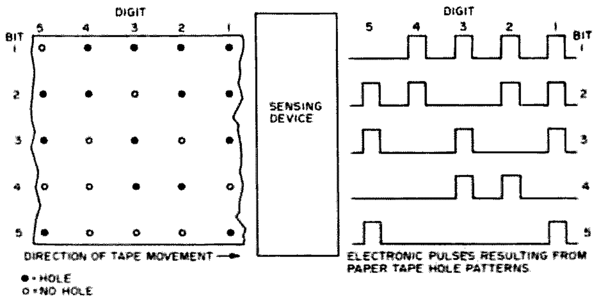

Fig. 1. Paper tape is a form of sequential memory storage, in that the bits identifying a given digit can only be retrieved during their allotted sensing time, which may cause delay in finding desired data.

Sequential access memory systems, including punched cards and magnetic disks as well as tapes, have been widely used in the area of mass computer memories. They typically contain program instructions and must be physically introduced into the processor system — threaded through a sensing device, for example — so that input data can be operated upon. They may also be used to retain the data for future processing. These devices provide a permanent storage capability since the cards, disks, and tapes can be removed and filed for repeated use, and they have non-destructive readouts (i.e., data does not have to be re-entered every time it is used); however, they have some shortcomings which limit their usefulness in high speed memory applications.

For example, sequential access can be a relatively slow process because a large amount of irrelevant data may have to be scanned before the desired bits are found. This delay may be from milliseconds to minutes, which is much too great for many of the uses to which modern data processing equipment is put. Additionally, these sequential

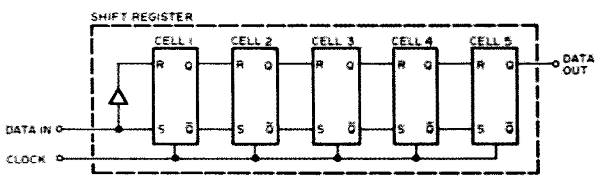

Fig. 2. The shift register, which stores data for as long as it takes for the clock to move it through each cell, is typical of semiconductor sequential memory systems.

Reprinted from the *GTE Lenkurt Demodulator*, September, October, 1975.

mass memory systems require a mechanism to move the data-carrying medium past the sensor; this device is of necessity completely mechanical, and is subject to the adjustment and maintenance considerations which apply to all such devices.

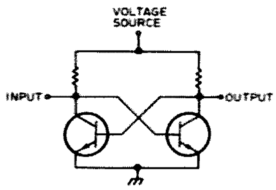

Fig. 3. The bistable multivibrator, or flip flop, has two stable states, making it an ideal digital data memory storage cell.

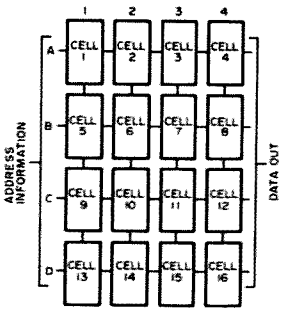

Fig. 4. A random access memory (RAM) is a matrix of memory cells, any of which can be accessed without regard for any other cell.

Memory Chips

-- RAMs, ROMs, PROMs, etc.

Temporary Memories

Cards, tapes and disks continue to play an important role as high density, long-term mass memory storage elements in such applications as personnel record maintenance, inventory control, and retention of performance data for comparison with future achievements.

For low capacity, temporary memory storage, however, structures composed of semiconductor devices have become dominant in recent years. Temporary data storage facilities are used in such areas as office equipment (calculators, etc.) and immediate-use or "working" memories wherein a data processing device can hold the data with which it is dealing at any given time. It is not uncommon for a data processing system to use tapes and similar elements as permanent, high volume program storage facilities, and semiconductor structures for the "working" memories in which the stored data is operated upon.

Temporary memories are also widely used in data processing terminals, which serve as remote input/output units for a large central computer and may be in any number of forms, from a simple typewriter keyboard to a small computer. Terminals provide a means of encoding data for manipulation by a central computer, and decoding it for use by a human operator.

Interconnection of central computer and remote terminal is commonly made over telephone lines through an interface unit called a modem, or data set. The data set may also contain a temporary memory facility which allows it to hold data and either condition it for transmission over the lines or prepare received data for application to the processor.

The semiconductor devices used in temporary memory structures are typically arranged as groups of individual units called memory cells, each of which stores one bit of information as either a logic 1 or logic 0. A cell may consist of as little as one transistor-capacitor combination, or it may be a complex arrangement of several components. But, whatever its composition, it has at least two states that can represent digital data bits.

Shift Registers

A shift register is a device for the temporary storage of digital information; when a shift, or clock, pulse is applied, the register accepts new data and moves every stored bit one step toward the output.

Fig. 2 shows an example of a semiconductor shift register containing five memory cells, each of which is a solid state reset-set (R-S) flip flop circuit. Data applied to the register input in a digital form is stored and shifted from cell to cell in accordance with the clock cycle rate. A logic 1 on the S input of cell 1, for example, will set the flip flop to the 1, or "on," state if a clock pulse is present at input C, thus storing the digit. On the next clock pulse, the stored bit is shifted out of cell 1 to set the second cell to the 1 state, and a new digit is fixed in the first cell. This procedure continues through the register, with the output of the final cell being shifted out for data processing. The clock frequency controls the rate at which the shift register stores and feeds out data bits, with each bit being delayed between input and output by as many clock cycles as there are cells in the register. Since the storage and retrieval are done on a first-in, first-out basis, the shift register is a sequential memory storage device.

Digital data can also be handled by a random access process. This does not mean, of course, that no orderly procedure is involved; it means, rather, that information can be stored in a partic-

ular memory cell, or location, and retrieved without regard for any other location.

Random Access Memory Systems

A random access memory (RAM) can be defined as a structure in which any data bit can be stored (written) or retrieved (read out) in any order.

One of the most basic ways to create a memory cell is through the use of the bistable multivibrator, or flip flop. As shown in Fig. 3, such a memory cell may consist of only two transistors, two resistors, and a power source. In this cell, one or the other of the transistors is always conducting, holding the other one off. When an external signal forces the off transistor into conduction, the initially on transistor turns off and remains in this condition until another external signal resets it. The flip flop, therefore, has two stable states which can be used to store information in the form of logic 1s and 0s.

A RAM is essentially a matrix of such memory cells, with each cell identified by a unique code, or address. The data processing equipment can retrieve a bit of information by addressing the proper location. Because of the matrix structure, the time required to locate any given bit is approximately the same as that required to locate any other bit. For example, in Fig. 4 the digit stored in cell 1, at location A1, could be available at the data output in almost exactly the same time as the bit in cell 16, location D4. This rapid access to information makes the RAM ideal for application as a temporary storage facility.

Random access memory structures are of two basic types: read/write and read only. A read/write RAM is programmable; that is, data can be entered into, changed, and removed from the memory at any time. A read

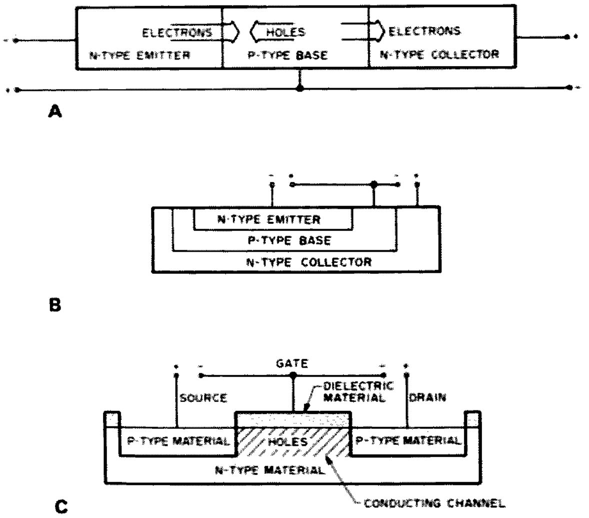

Fig. 5. Bipolar and unipolar transistor structures are the most widely used semiconductor memory cell components.

only memory (ROM), however, has certain data patterns fixed into it, usually during the manufacturing process. In such a structure, information can be read out – it will always perform the same function – but the stored program does not change. Because the data pattern is fixed, a ROM retains its program regardless of circuit power considerations; that is, it is a "non-volatile" memory device. A read/write memory, however, needs a constant source of power to remain in operation; if power is removed, the semiconductors stop conducting and the stored information is lost, so the read/write RAM is considered to be a "volatile" device.

Although it is not technically accurate to do so, common usage has led read/write memories to be referred to simply as RAMs, while read only structures – which are, in reality, a type of RAM – are designated ROMs, and this discussion will follow the same nomenclature.

Bipolar and Unipolar Transistors

The two most widely used devices in memory matrix design today are the bipolar and unipolar, or field effect, transistor. Each can be easily realized as an integrated circuit (IC) component, and they are readily adaptable to virtually any circuit configuration.

Essentially, a bipolar transistor is a semiconductor device whose conductive properties depend upon both majority and minority carriers; that is, current flows in a bipolar transistor because of the simultaneous movement of both positive and negative charges. Negative charges predominate in n-type semiconductor material because there is a surplus of free electrons within the material's atomic structure; p-type material, however, has a shortage of free electrons. The regions in which the electrons would normally exist act as positive, mass-bearing charges called "holes"; p-type material thus maintains an excess of positive charge carriers. The common transistor is a general type of bipolar device, since its current flows due to hole and electron movement. Fig. 5A shows the normal flow pattern within an NPN structure (Fig. 5B shows a bipolar NPN structure as an integrated circuit). The forward-biased emitter-base junction allows electrons to be injected by the emitter into the base region. Within the base, the greater part of the current flow is caused by holes combining with the excess electrons. The reverse bias of the collector-base junction allows electrons to pass into the collector region; because there are two n-type regions, electrons are the majority carriers, although the simultaneous action of the minority carrier holes is indispensable.

The field effect transistor (FET) is a unipolar device, in that its current flow is the result of the movement of only one type of carrier. In what is called the p-channel FET, holes are the majority carriers, while the carriers in an n-channel FET are electrons.

Fig. 5C shows a p-channel FET structure operating in the enhancement mode, which is the most common operating mode for FETs. In this mode, there is no conduction within the device when the gate voltage is zero; the other mode of operation is called depletion, wherein the semiconductor device is always conducting and requires a proper gate-to-source voltage to turn off.

When the gate in Fig. 5C is made negative with respect to the source, it creates an electrostatic field which attracts holes from the n-type semiconductor material toward the area directly below the gate dielectric material. Initially, this n-type area has a surplus of electrons, but as the holes are drawn into it, the electrons are neutralized. At some gate voltage, the holes become dominant and a current-carrying channel is produced between source and drain in which holes are the majority carriers. Because the gate is electrically isolated from the rest of the structure by the dielectric material, there is no current flow into it; the channel, which allows current to flow between

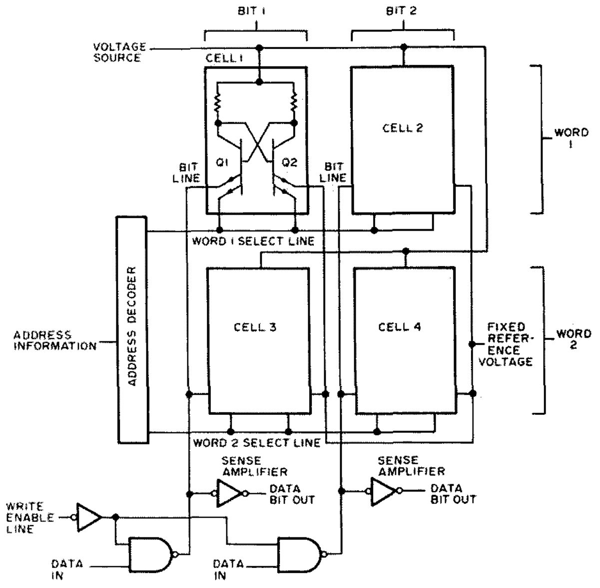

Fig. 6. A 2-word, 2-bits-per-word memory array utilizing multi-emitter bipolar transistor structures.

source and drain, is created and maintained by the electrostatic field.

The need to provide more electronic function in increasingly small areas has resulted in a great variety of miniaturized circuits. Bipolar transistors, for example, can be realized as discrete items, such as those seen in various entertainment products. In data processing applications, however, the large number of components required to produce a memory matrix makes the use of such bulky devices impractical; a circuit board with several hundred discrete transistors mounted on it – which is what a memory matrix would require – would be too unwieldy to be of any real use.

Bipolar Transistor RAMs

Integrated circuit techniques allow quantities of circuit elements to be realized in a small space; these techniques have been used to produce bipolar transistor memories of various microminiaturized sizes and densities.

The basic storage element in these matrices is the bistable flip flop, which appears in many circuit variations to meet different application requirements.

A bipolar RAM cell which has been widely used is the transistor-transistor-logic (TTL) type, exemplified by the multiple-emitter circuit (see Fig. 6). In this case, the data processor applies an address code to a decoding circuit; the decoded address raises the voltage on the correct word select line (places it at a logic 1 level), preparing the cell for the read or write function. A logic 1 bit can be written into the cell, for example, by placing the write enable line at a low voltage (logic 0) level while the data bit input is logic 1. This causes the bit line to be low, turning Q1 on and Q2 off, a state which represents a logic 1 within the cell. Once the write function is complete, the address changes, the word select line returns to a logic 0 state, and Q1 remains on. To read out the stored digit, the address raises the word select line level and the write enable line is held high (logic 1), allowing read current representing the value of the cell's contents to flow into the appropriate sense amplifier for output to the data processor. Because the read process does not change the state of the flip flop, the stored information is not lost and the cell is considered to have a "nondestructive" readout capability.

The 2-word, 2-bits-per-word memory shown in Fig. 6 is, of course, limited in its application. The same addressing, reading, and writing functions, however, are performed in bipolar RAMs containing several times the number of cells. A typical example of expanded capacity is a single integrated circuit capable of storing 16 words of 4 bits each, for a total of 64 bits on one tiny silicon chip. GTE Lenkurt uses nine such chips in both its 262A and 262B data sets. The bipolar RAMs comprise a data memory, in which input data is held to be operated upon. Because of the read/write capabilities of the RAMs, the data being processed can constantly be updated and changed.

Major considerations in memory design include the speed with which a cell can be made to change state (access time) and the amount of power dissipated by the cell's components.

Operating in a saturation mode – in which the "on" transistor constantly conducts the maximum possible current – the TTL-type memory cell requires some amount of time to drive the transistor out of saturation before a change of state can occur. This delay is only on the order of nanoseconds, but is enough to concern circuit designers. In addition, the saturation mode consumes relatively large amounts of power. Two of the more successful configurations developed to overcome these disadvantages are the diode coupled and emitter-coupled logic (ECL) cells.

Diode Coupled RAMs

Two gating diodes are used to control conduction in a diode coupled cell (Fig. 7). In integrated circuits, these diodes are frequently "hot-electron," or "Schottky barrier," devices, which become forward-biased at lower voltages than conventional diodes.

If the state of a cell must be changed to store a bit, the address decoder causes the voltage on the word select line to be forced low, while the voltage is raised on the bit line associated with the transistor to be turned off. Referring to Fig. 7, in which Q2 is hypothetically to be turned off, raising the bit line B voltage and dropping the word select line (effectively making it more negative) draws additional current through R4, increasing the base voltage on Q1 to the point at which it begins conducting. The cross-coupling of the transistors then causes Q2 to turn off, thus effecting the cell's change of state.

Reading the stored digit out of a diode coupled cell also requires that the word select line be forced low, but in this case there is no voltage increase on either of the bit lines. The combined effects of the lowered word select line and a bias network cause the diode associated with the "on" transistor to be forward-biased, causing the diode to conduct. Since the diode associated with the "off" transistor is reverse-biased, a differential voltage develops between the bit lines. A sensing circuit determines the cell's logic state from this voltage.

Read current in a diode coupled cell is greater than standby current, which flows when the cell is storing a bit without being addressed, but is substantially lower than write current. Because of this, the voltage developed across the load resistors during the read operation is not great enough to change the cell's state and the readout is a nondestructive process.

Since standby current is lower than read current and is present a greater percent of the time, overall power consumption in a diode coupled cell is lower than that of a TTL device.

ECL RAMs

The structure of emitter-coupled logic (ECL) memory cells closely resembles that of TTL cells, but biasing techniques are used to keep the transistors out of saturation. This allows the ECL storage element to change state very rapidly; the greatest advantage of ECL over other semiconductor memory configurations is that it has the shortest access time of all. Reading and writing processes are accomplished in essentially the same manner as for TTL, but at a greater speed. Because it constantly draws high current, however, an ECL memory cell has even higher power consumption than TTL, a fact which does impair its usefulness in certain applications.

MOS Technology

One of the major objectives in semiconductor memory design has been to incorporate as much capacity as possible in the smallest area. The greatest size reductions have been achieved with metal oxide-silicon (MOS) techniques, which produce field effect transistor (FET) structures that are considerably more compact than the bipolar integrated circuits (ICs) previously discussed.

An MOS FET is formed by depositing an insulating metal oxide – most often silicon dioxide – on a chip of silicon. Etching processes then remove the oxide from selected areas of the chip, exposing the substrate at source and drain locations while leaving the gate region insulated. Further processing establishes n- and p-type areas within the substrate.

The size reduction possible with MOS techniques allows a much denser memory array to be produced within a given space than is possible with bipolar devices; there are also substantially lower power requirements and reduced packaging costs.

Storage cells composed of MOS FETs may be of either a static or dynamic nature. A static cell retains its stored data as long as power is supplied to the circuit; a dynamic cell depends upon capacitive charge storage to hold its data, and must receive a "refresh" input to counteract the effects of leakage.

Static MOS RAMs

The basic static MOS RAM cell is a bistable multivibrator (see Fig. 8) closely resembling the bipolar flip flop used in TTL memories. In an MOS flip flop, however, transistors serve not only as cross-coupled inverters (Q3 and Q4), but also as load resistances (Q1 and Q2). Electrical isolation of the FET gate results in a very high input resistance which can be controlled by the gate voltage. A large-value resistor can thus be produced by an FET in a relatively small space compared to a conventional resistor.

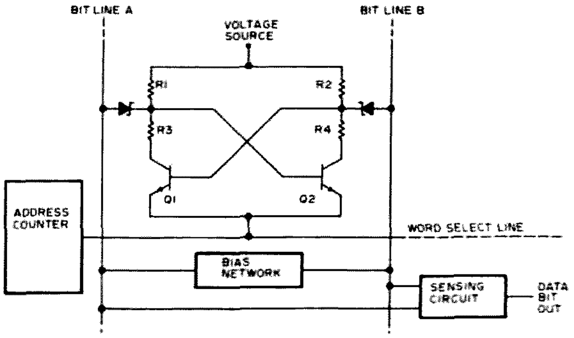

Fig. 7. A diode coupled memory cell uses gating diodes to control conduction and reduce power consumption.

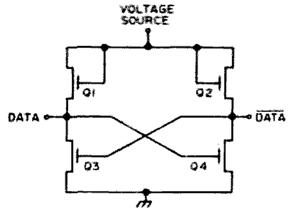

Fig. 8. The heart of the static MOS RAM storage cell is the bistable flip flop composed entirely of field effect transistors (FETs). The logic level at one terminal is always the complement of that at the other.

Since only one of the cross-coupled inverters conducts at any given time, the cell has two stable states which can be used to store information in the form of logic 1s and 0s. The state of the cell is determined by external address and data signals. The cell's state remains constant unless changed by an external signal, so no refresh action is required and the circuitry needed to support the operation of the cell is simplified.

A static MOS RAM storage unit, however, contains a minimum of four transistors, so it occupies a considerable amount of space on a silicon chip and consumes a relatively large amount of power. Because of these disadvantages, static devices have been largely replaced by dynamic MOS RAMs.

Dynamic MOS RAMs

The basic storage element in a dynamic MOS RAM cell is a capacitor, which holds and releases a stored charge in response to read and write commands. While the capacitor could be an external device, it is much more common for dynamic RAMs to utilize the capacitance existing between gate and source of the MOS FET itself. This capacitance is due to the isolation of the gate from the rest of the structure by a dielectric material. Charging the gate-source capacitance sufficiently to turn the transistor on represents a logic 1 state in most applications, while a lower charge or no charge at all serves as a logic 0.

Inevitably, as with all capacitive devices, the charge stored in the gate-source region drains off due to leakage current. If the charge is allowed to deteriorate too much, the data bit is lost, so some means must be provided to periodically restore, or refresh, the charge; a common requirement is that every cell in a memory matrix be refreshed every 2 milliseconds. Circuits to accomplish this are included in dynamic RAM designs, as are address decoding circuits.

The operation of a typical dynamic MOS RAM cell can be illustrated with the 3 transistor cell shown in Fig. 9. In this case, information is stored as a charge in the gate-source capacitance (C_G) of transistor Q2. To write a data bit into this cell, an address decoder produces a write select signal, activating transistor Q1 and allowing data on the write data line to be transferred to the storage element. Depending upon the state of the data input, C_G either charges or is discharged. When the write select signal is removed at the end of the write cycle, the bit is held in the cell.

At the beginning of a read cycle, both the read and write data lines are preset to some voltage. When the address decoder produces a read select signal, Q3 is ready to begin conducting. If the charge on C_G is sufficient (logic 1), Q2 turns on and current flows through Q2 and Q3, reducing the voltage on the read data line. With no charge on the capacitance, Q2 and Q3 remain off and the read data line stays at its preset level. Because of the gate isolation, C_G is in the same condition (charged or discharged) at the end of the read cycle as at the beginning, making the read process "nondestructive." An output amplifier senses the state of the read data line and determines what cell condition would produce it (a low-level line generally indicates a stored logic 1) for application to the data processor.

Refresh

Refresh of the stored digit in Fig. 9 is accomplished through a clocked amplifier connected between the read and write data lines. Control circuitry provides the timing necessary to keep the refresh cycle separate from the read and write operations.

The refresh process involves reading out the stored digit and writing it back into the cell. To do this, both data lines are preset at the beginning of the refresh cycle. A read select signal is then produced, transferring the bit to the read data line in the same manner as the normal read operation. The refresh amplifier inverts the condition of the read data line and applies it to the write data line. A write select signal then replaces the read signal and the data present on the write data line is entered into the memory. If, for example, a logic 1 (maximum charge) is stored on C_G, the read data line is forced low (logic 0) when the read select signal forces Q2 and Q3 into conduction. The refresh amplifier inverts this and applies logic 1 to the write data line; the presence of the write select signal causes this data to be written into the cell as a refreshed bit. With no charge (logic 0) on C_G, this sequence is repeated, with a logic 0 appearing on the write data line to ensure that the capacitance is not charged by stray circuit currents.

In Fig. 9, timing from the control circuitry allows a single amplifier to serve an entire column of cells. One alternative configuration uses a common read/write data line. This lets the cell form a loop within itself and thus eliminates refresh amplifiers.

ROMs

A read only memory (ROM) is a data storage facility into which information is normally written only once. After this entry, a ROM always produces the same output when addressed.

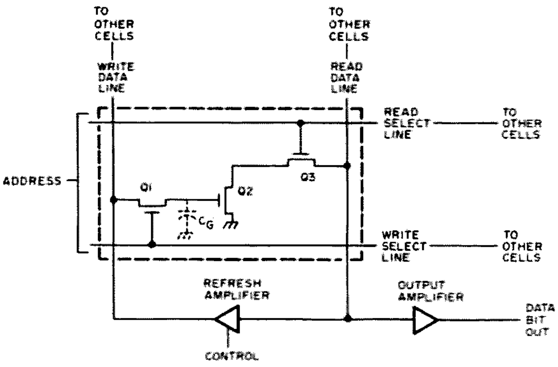

Fig. 9. A dynamic MOS RAM cell stores data in the gate-source capacitance of one of its transistors.

The difference between the read/write RAM and the ROM can perhaps be best illustrated with the example of the pocket calculator. In almost all calculator designs, a RAM matrix serves as a "working," or data, memory and ROMs are used for input/output interface, timing control and program storage (see Fig. 10).

Each key on the calculator keyboard is identified by a unique binary number; all of these numbers are permanently fixed in the ROM encoder so that, when a key is pressed, the corresponding binary number appears as the encoder output. If a digit key is pressed, the bits comprising the number are written into the RAM data store. Function key (addition, subtraction, etc.) numbers are applied to the ROM program store as addresses. In the program store are contained instructions for each function; when an address is presented, the proper instructions are read out of the ROM, leading to performance of the desired operation upon the data held in the RAM. When the function has been completed, the result is read out and applied to the decoder, which puts it into a form suitable for display.

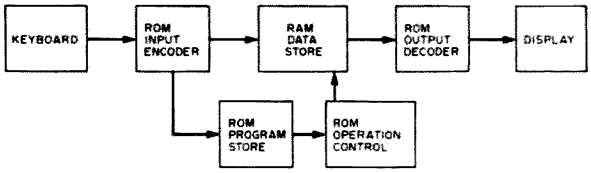

Fig. 10. A pocket calculator typically utilizes both RAM and ROM facilities to process input data.

The basic ROM structure is a matrix of elements, each of which is accessed by a random address code, allowing approximately equal access time to all bits. The simplest ROM structure is a network of diodes wherein the presence or absence of a diode determines the logic state of a particular location; such a network is shown in Fig. 11. The row address decoder raises the voltage on the appropriate word line to a high positive level, forward-biasing the diodes attached to that line. When the diodes begin conducting, they force their associated bit lines to a high (logic 1) level, while bit lines not connected to diodes remain low (logic 0). Output amplifiers sense the state of each line and present the bits to the data processor's other circuitry.

For example, if the row address decoder raises the word line 1 level, diodes D1, D2, and D3 conduct, raising bit lines 1, 2 and 4. In this case, the matrix output would be the binary number 1101. The next address might raise word line 4, in which case the output would be 0110. In some applications, column (bit line) addressing is added to select fewer than the maximum possible bit outputs.

ROM matrices are also formed with bipolar and MOS devices. In the most common configurations, the presence or absence of conductors establishes logic states.

Fig. 12 shows a ROM matrix utilizing multiple-emitter bipolar transistors. In this case, the collectors are used as row enabling contacts, replacing the word lines, and emitter contacts are omitted from selected locations to set logic levels. When the row address decoder raises the voltage on the appropriate collector to a

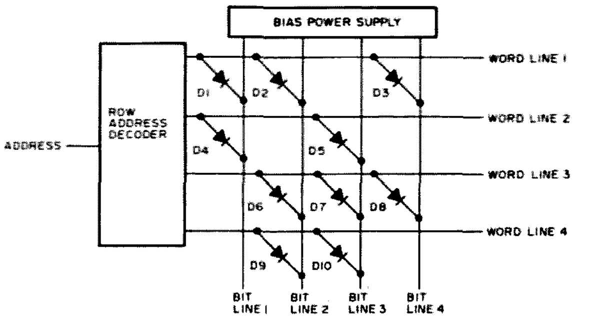

Fig. 11. A diode network with random access addressing is the simplest type of semiconductor ROM.

sufficiently high level, the transistor segments with emitter contacts begin conducting: for example, if Q2 is selected, the matrix output is 1001 (the level of columns 1 and 4 raised by conduction, 2 and 3 remaining low). In Fig. 12, column address and data output decoding selects two of the four bits for application to the processor.

In Fig. 13, a ROM matrix composed of static MOS FET devices is shown. Logic states are determined by the presence or absence of gates within the transistor structures. Reading this memory is accomplished in the same manner as diode and bipolar ROMs, except that the bit lines are driven low (to ground) when the FETs conduct.

Programmable ROMs

Semiconductor memories are almost universally formed on minute silicon chips capable of holding large numbers of integrated circuit devices; the chips often contain complete addressing, decoding, and output circuitry in addition to the memory cells.

In the formation of standard ROM matrices – in which the stored data is never to be changed – logic states are established during the manufacturing process by omitting the proper elements to create the desired bit pattern. This is the most prevalent type of read only memory. There are cases, however, in which standard memories are not available to meet application requirements, so programmable ROM (PROM) matrices are also produced.

A PROM is essentially a semiconductor matrix which has its program written into it at some time other than the manufacturing process. The manufacturer provides a chip on which all of the rows and columns (word and bit lines) are linked by conducting devices. Before integrating the chip into a circuit, the purchaser of the PROM uses various techniques – from application of a high-level write current to a laser beam – to eliminate devices from the matrix. In this way, a stored program unique to a given application can be produced.

New Developments

This discussion has covered structures that are representative of devices currently used in data processing memory facilities, and has not attempted to consider all of the variations of the basic structures. Advances are being made at a remarkable rate, and today's technology may be totally obsolete in a few years. Among the new memory devices that may bring this about are charge coupled devices (CCDs), bucket brigade devices (BBDs) and magnetic bubbles. Charge coupled and bucket brigade devices are similar in that both store digits as the presence or absence of electric charge.

A basic CCD is a semiconductor chip – either n- or p-type – over which a dielectric material is laid. A series of gate contacts are placed along the dielectric. Charge is stored as minority carriers under the gate regions. When the substrate is p-type, for example, applying a positive voltage to one gate attracts electrons out of the substrate until they dominate in the area directly beneath the gate, forming a "potential well." This storage condition is maintained for times up to several seconds after the gate voltage is reduced. Raising potential on the next gate in the series forms a second potential well into which the stored charge is transferred; gate potentials are sequentially raised by a clocked voltage to move the stored bit through the device. The CCD is thus a sequentially accessed memory facility similar to the shift register.

The movement of charge in a bucket brigade device is the same as in the CCD. Potential wells, however, are replaced by "buckets" of material unlike the substrate; for example, n-type areas may be embedded beneath the gates in a p-type chip to act as MOS storage capacitors.

Fabrication techniques currently limit the production of CCDs and BBDs, but they hold the promise of extremely small, very fast, low power memories of high density, and many manufacturers are investigating their commercial feasibility.

Magnetic bubble technology is still in the developmental stage, but it also shows great promise. The bubbles, which are tiny, mobile particles whose polarity is opposite to that of the thin film containing them, can be arranged to form coded data patterns, thus providing a storage medium.

Conventional bipolar and MOS devices are being modified to achieve an optimum combination of memory cell size, speed and power consumption. N-channel and p-channel MOS FETs are being combined on one chip as complementary MOS (CMOS) devices for low power applications, and Schottky diodes are being introduced into various bipolar configurations to decrease power consumption and increase speed. One such modification has resulted in the low power Schottky TTL memory cell, which has access speed approaching that of ECL (the fastest presently available cell type) and power requirements close to those of MOS FETs; GTE Lenkurt uses this family of devices in its 262A and 262B data sets to achieve the most rapid data processing possible with the least power. In another development, metal-nitride oxide semiconductors are being looked at as possible non-volatile read/write RAMs (memory facilities which

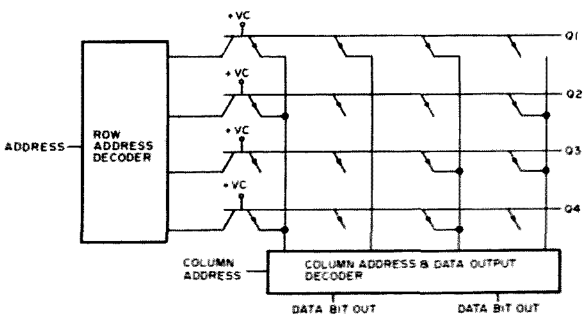

Fig. 12. Bipolar read only memory matrix.

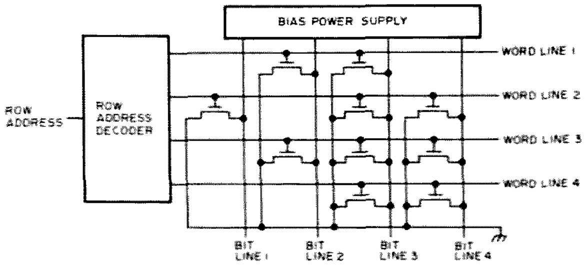

Fig. 13. The logic states within a static MOS RAM are determined by the presence or absence of gate contacts.

would not lose stored data when power is removed).

Whether improvements to existing structures continue at the present rate, or new technologies take over completely, there is no doubt that semiconductors will play an increasingly important role in data processing systems. ■

Bibliography

1. Altman, L. "Semiconductor Random-Access Memories," *Electronics,* Vol. 47, No. 12 (June 13, 1974), 108-110.
2. Carr, W. and J. Mize. *MOS/LSI Design and Application.* New York: McGraw-Hill Book Co., 1972.
3. Eimbinder, J., ed. *Semiconductor Memories.* New York: Wiley-Interscience, 1971.
4. Frankenberg, R. "Designer's Guide to: Semiconductor Memories – Part 2," *EDN,* Vol. 20, No. 15 (August 20, 1975), 58-65.
5. Kroeger, J. and B. Threewitt. "Review the Basics of MOS logic," *Electronic Design,* Vol. 22, No. 6 (March 15, 1974), 98-105.
6. Luecke, G. et. al. *Semiconductor Memory Design and Application.* New York: McGraw-Hill Book Co., 1973.
7. Orlicky, J. *The Successful Computer System.* New York. McGraw-Hill Book Co., 1969.
8. *Reference Data For Radio Engineers.* Howard W. Sams & Co., 1968.

Stanley P. Levy WB6SQU
P.O. Box 961
Temple City CA 91780

A Morse to RTTY Converter

-- using a microprocessor

The advent of powerful, inexpensive microprocessors has made the goal of a good Morse code to TTY translator a practical reality. Only seven chips are needed to implement this Morse code to Teletype translator which is self-adaptive to code speed and spacing over a wide range – without adjustment. Either ASCII or Baudot output is available by changing the programming ROM. Serial output is provided which can be adjusted from 60 to 100 wpm.

This translator will accept a dot/dash ratio from 1:2 to 1:4 (1:3 is nominal for International Morse Code) with any ratio of letter speed to spacing (i.e., 25 wpm characters spaced out for 10 wpm) because mark and space timing are evaluated separately. A speed variation of ±20% per character can be followed without error. Larger variations require from three to ten characters at the new speed to regain lock. Word spacing is also provided, and carriage return is adjusted to avoid breaking up words at the end of lines.

Due to its simplicity, this translator can be assembled in only an hour or two. Circuit boards and components are available, as well as preprogrammed ROMs and complete programming information (see Parts List).

This machine is based on the MOS Technology MCS 6502 microprocessor. This device offers several features which make it attractive for this application: low cost, fast cycle time, on-chip clock oscillator, and single +5 volt power supply. Bus organization is the same as the M6800 and offers simple memory-I/O interface with a minimum of external parts.

The entire system includes a CPU (the microprocessor), a 512 x 8 ROM containing the program, a 128 x 8 RAM, an interrupt timer, and three TTL chips which provide a 1-bit input port, a 1-bit output port, and an interrupt control flip flop. No UART or other parallel to serial converter is needed since this function is provided by the software. The output port feeds the display device directly in serial form. The output data rate is controlled by the interrupt timer, and can be varied to suit the display used.

The complete schematic is shown in Fig. 1. Although it may look intimidating, most of the wiring is just parallel runs from chip to chip. Pins 26 through 33 of Z1 are the data bus over which instructions and data flow between the CPU and the other chips. The address of instructions, memory locations and I/O ports are output on the address bus, pins 9 through 20. The R/W line signals whether data is being read into or written out of the processor. Z5A and Z4B form a 1-bit output port which is connected to data bus 0. Z5B, Z6A and Q2 are used as an input port, driving data onto data bus 7. The 555, Z7, is an interrupt timer. Each time it clocks, the execution of the program is suspended and a new output bit appears at pin 5 of Z4. By varying the rate of the interrupts, the output rate may be set to any desired speed. More detailed information on the 6502 microprocessor is contained in the two excellent manuals available from the manufacturer (see Reference List).

The program is contained in the ROM, Z3. It is an Intel

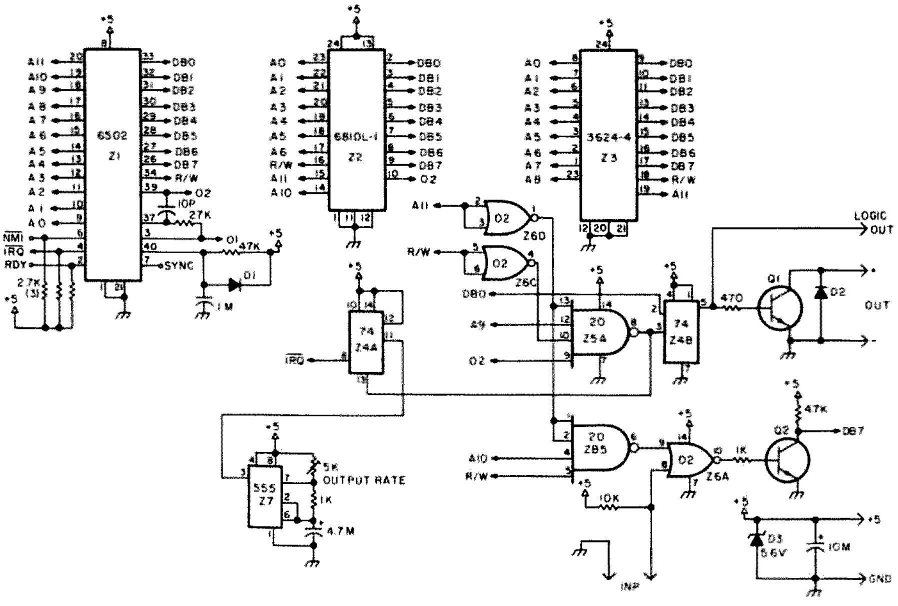

Fig. 1. Schematic.

D-3624, which is a fusible-link, bipolar, tri-state, 512 x 8 PROM. A complete program listing with notes is available, as well as pre-programmed PROMs. Basically, the dot-dash threshold is set equal to half the mark period if the element was a dash, or to twice the period if it was a dot. Thus, the threshold varies between 1/2 and 2/3 of dash time. This provides a tolerance in dot-dash timing, and makes the threshold follow the input code speed. A similar method is used for spaces. Word spacing threshold is initially set for 1-1/2 times the letter space. If more than eight characters are received without a word space, the threshold is decreased. If more than four characters are received with spaces between each, the threshold is increased. This process is iterated until proper spacing is achieved. A counter keeps track of how many characters have been printed in each line. At the first word space following the 64th character, a CR-LF-LTRS sequence is output. This can be easily modified for other printer or display widths, or bypassed entirely by minor changes in programming.

The input is sampled periodically by a software loop, which simultaneously increments a counter. When the input changes state, the elapsed time is represented by the number in the counter. The program processes the timing data, and then begins the timing loop over to wait for the next input change. The output is interrupt driven. Each time a new output bit is due, the timer Z7 clocks Z4A which in turn pulls the $\overline{IRQ}$ line of the CPU low. The microprocessor suspends whatever operation is being executed at the time, and jumps to a subroutine which outputs a new bit via Z4B. It then returns to the main program to resume operations. This procedure requires only 50 to 60 microseconds to complete, so there is no noticeable slowing of the main program execution. Part of the RAM is assigned as a FIFO buffer to accommodate situations such as upper case (FIGS-Char.-LTRS) or end of line (CR-LF-LTRS). In these cases several output characters are output very quickly, and the buffer stores and feeds them out sequentially at the TTY output rate.

Parts List

Z1	MCS6502 (MOS Technology)
Z2	MC6810L-1 (Motorola)
Z3	D-3624-4 (Intel)
Z4	SN 74LS74 N
Z5	SN 74LS20 N
Z6	SN 74LS02 N
Z7	NE 555
Q1	2N5682 (Motorola, any 100 mA, 150 volt NPN silicon)
Q2	2N3904
D1	1N4148
D2	1N4004
D3	5.6 volt 1 Watt zener
1	470 Ohm 5% ¼ Watt composition resistor
2	1k Ohm
3	2.7k Ohm
1	10k Ohm
1	4.7k Ohm
1	27k Ohm
1	47k Ohm
1	10 pF ceramic NPO
1	4.7 mF 10 volt tantalum
1	10 mF 10 volt tantalum
2	.1 mF ceramic

Misc. sockets, terminals, circuit board

The following items are available from: Levy Associates
P.O. Box 961
Temple City CA 91780

Kit of all ICs, electronic parts, pre-programmed ROM, sockets, double sided plated through circuit board (4 x 6")	$139.00
Kit of all ICs including pre-programmed ROM	$ 99.00
Circuit board only	$ 17.50
Pre-programmed ROM only	$ 42.50
Complete program listing and notes (supplied free with any above)	$ 3.50

Special programming also available – write describing options needed.

Assembly

Construction is simplified by using the available circuit board, which is double sided with plated-through holes. However, wire wrap is also satisfactory. Lead dress is not particularly critical, except pins 39, 37 and 3 of Z1 and to the 10 pF capacitor and the 27k resistor. These are connections for the clock oscillator, and pickup can cause frequency modulation of the clock, which can cause some very strange problems. Reasonably short ground leads should be provided. Z3 in particular draws several hundred milliamps and should have appropriately heavy supply connections.

Be sure to use sockets for all of the ICs. They must be inserted at various points in the checkout procedure. After mounting the sockets, they should be broken in by using the pins of a spare 14 or 16 pin IC. Insert and remove these pins at least once in each receptacle of the sockets, being sure to catch all of the pins of the 24 and 40 pin sockets. This reduces the insertion force required, and lessens the chance of bent pins and broken ICs.

A limited amount of parts substitution can be made. The 6810 must be a -1

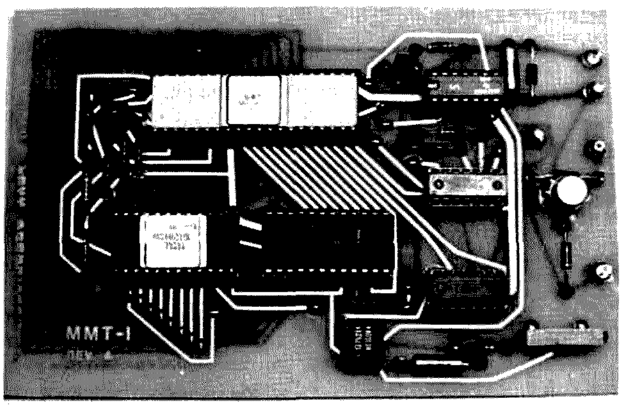

Fig. 2.

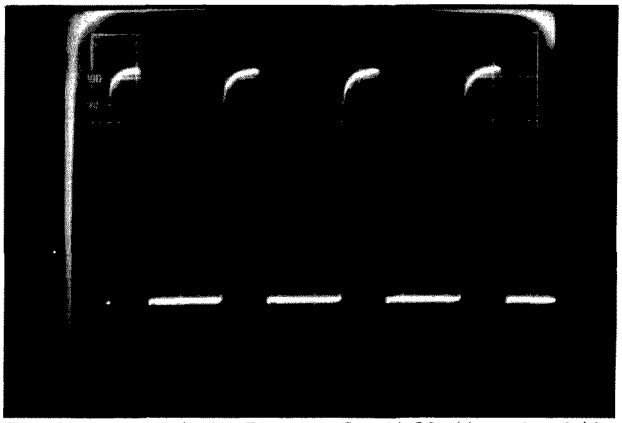

Fig. 3. System clock. Z1, pins 3 and 39. Vert: 1 volt/div. Horiz: 0.5 usec/div.

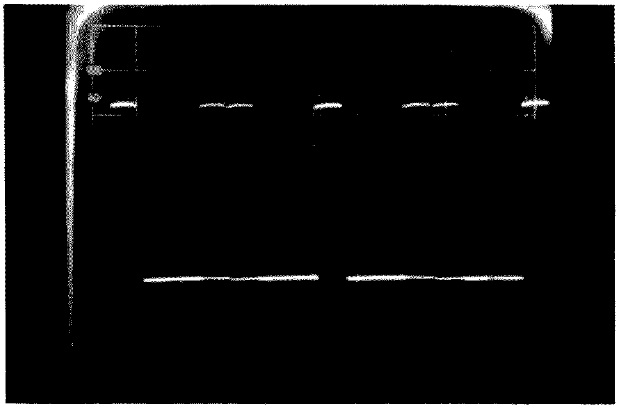

Fig. 4. Sync, Z1, pin 7. Vert: 1 volt/div. Horiz: 2 usec/div.

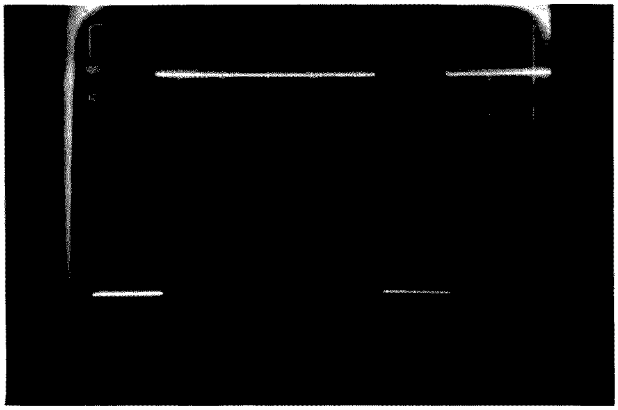

Fig. 5. Interrupt timer. Z7, pin 3. Vert: 1 volt/div. Horiz: 2 ms/div.

version, and the TTL must be low power Shottky to avoid excessive loading. The D-3624 can be either a standard or a -4 version, or a D-3604 can be substituted if eight 10k pull-up resistors are added to the data bus lines. Care should be taken to do the wiring with no mistakes. These components include relatively expensive MOS devices, which are not nearly so forgiving as TTL. Reversed polarity and shorted outputs can be disastrous. NOTE: Do not solder any part of the board without removing Z1 and Z2 first. Do not remove or insert any ICs while power is applied.

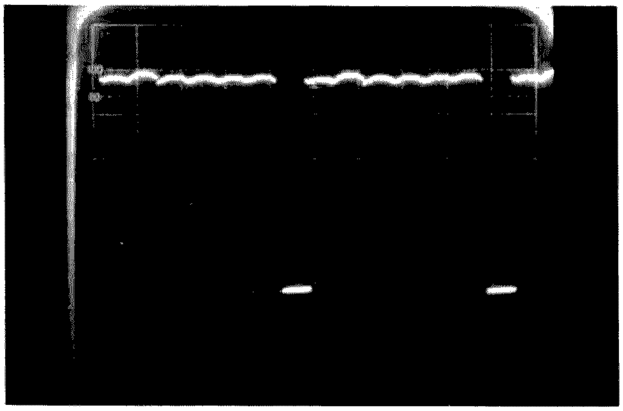

Fig. 6. Input sample pulse after 5 seconds. Z5, pin 6. Vert: 1 volt/div. Horiz: 2 usec/div.

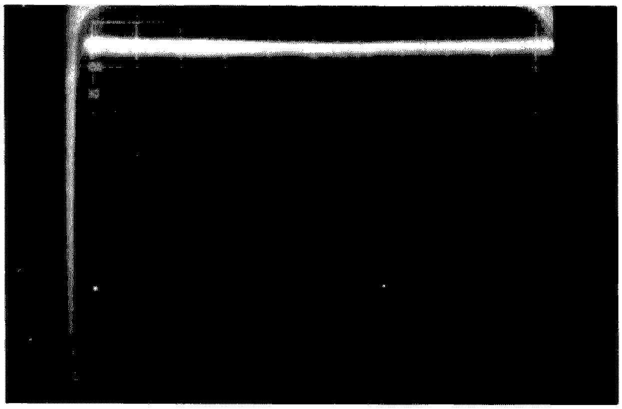

Fig. 7. Interrupt request, $\overline{IRQ}$, Z1, pin 4. Vert: 1 volt/div. Horiz: 2 ms/div.

Testing

A five volt, 400 mA current limited power supply and a 10 MHz scope, preferably dual trace, triggered sweep, are needed for testing. It should be noted that several of the ICs will get quite warm during operation. Z2 and Z3 will be almost too hot to touch after an hour of operation. The others will be slightly warm.

Remove all of the ICs and apply power. Check each socket to verify that +5 volts and ground appear on the correct pins.

Remove power and insert the 6502, Z1. Handle the 6502 by the pins in one hand and support the board on the other while inserting the chip. The conductivity of your body will keep static charges from damaging the MOS circuit. Be careful not to bend any of the pins. For all of the larger ICs it may help to carefully bend the leads on the two sides until they are parallel, to ease entry into the sockets.

Connect the scope to pin 3 of Z1, and apply power. An approximate square wave of about 750 kHz (±30%) should appear (Fig. 3). A similar waveform should appear on pin 39.

Move the scope to pin 7 of Z1. Using a clip lead, momentarily short the anode of D1 to ground. A burst of 1 to 2 microsecond pulses should appear (Fig. 4). The duration of the burst may be from a few milliseconds to continuous. Each pulse signals a new instruction being fetched by the microprocessor. Since there is no ROM to supply instructions, it executes essentially a random sequence, which usually "blows up" and stops executing after a period of time.

Next, insert Z2, the 6810-1, being sure to power off first. Use the same technique as for the 6502. Reapply power, and make the same test as before. The same results should be observed.

Insert the 555, Z7. On pin 3 of Z7 a pulse train will appear (Fig. 5). Set the trim pot for the time period corresponding to the desired output TTY speed from Fig. 10.

Insert the 74LS02, Z6, the 74LS20, Z5, and the D-3624 ROM, Z3. Connect the scope to pin 7 of Z1. You should see a series of 1 microsecond pulses of irregular spacing (Fig. 4). Connect the scope to pin 6 of Z5. Momentarily short the anode of D1 to ground. Immediately following, a 1 microsecond pulse with a repetition rate of approximately 7 milliseconds should appear. This is the input sample rate. After a few

An Authorized Bicentennial Program of
73 MAGAZINE

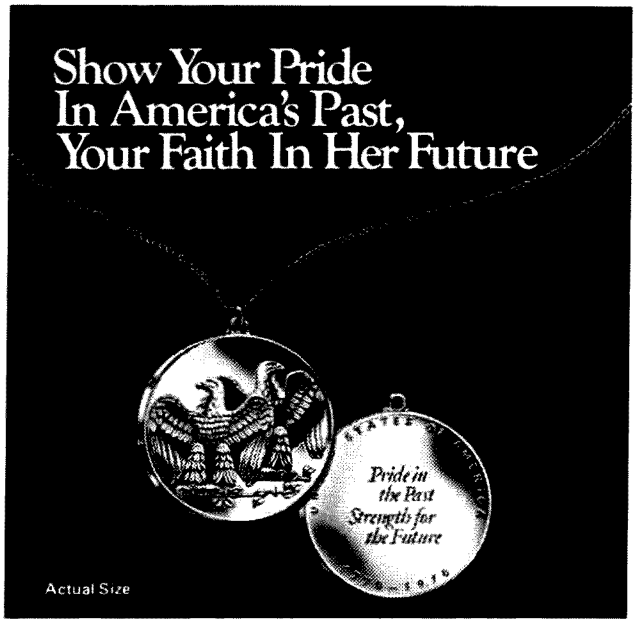

Own and Give the Double Eagle Pendant as a Permanent Keepsake of the Bicentennial-only $7.95

Two delicately chiseled majestic American eagles, symbolizing the first two hundred years of the United States of America, form the design of this beautiful keepsake authorized by the U.S.Historical Society. One eagle looks proudly to America's past, the other confidently to the future.

Created for the Society by the famed Medallic Art craftsmen who designed and made the official Inaugural Medallion for Presidents Ford, Nixon, Johnson, Kennedy, Eisenhower, Truman and Roosevelt.

Coin Collectors: Also available as a bas relief medallion.

This valuable American work of art is available in silver plate, 24-karat gold plate, antique bronze and solid sterling silver.

Acquire the official Double Eagle medallion or pendant for yourself, for members of your family and for your friends as a sign of your pride in America's past and your faith in her future.

Mail to: 73 MAGAZINE
c/o U.S. HISTORICAL SOCIETY
FIRST AND MAIN STREETS
RICHMOND, VIRGINIA 23219

Yes, I want to show my pride in America's past, faith in her future. Please send the following authorized gift boxed Double Eagle medallion(s) and/or pendant(s) with neck chain(s). Full refund if returned within 30 days.

	QUANTITY		COST
	PENDANT WITH NECK CHAIN	MEDALLION	
SOLID STERLING SILVER @ $29.95			
24 KARAT GOLD PLATE @ $10.95			
SILVER PLATE @ $9.95			
ANTIQUE BRONZE @ $7.95			
Please add $ .75 per pendant/medallion For postage and handling			
TOTAL			

I enclose a check for $ ________.

NAME ________

ADDRESS ________

CITY ________ STATE ________ ZIP ________

Virginia residents add 4% sales tax.
Please allow 30 days for delivery.

6

new from MATRIX

MICROCOMPUTER DICTIONARY AND GUIDE

Charles J. Sippl and David Kidd

This new microcomputer dictionary fills the urgent need for all communications people, computer people, engineers, scientists and industrialists to become quickly familiar with the terminology and nomenclature in a new revolution in computer control capabilities.

Over 8000 definitions and explanations of terms and concepts (704 pages) relating to microprocessors, microcomputers and microcontrollers. There are also separate appendices on: programmable calculators; math and statistics definitions; flowchart symbols and techniques; binary number systems and switching theory; symbol charts and tables; summaries of BASIC FORTRAN and APL. In addition there is a comprehensive electronics/computer abbreviations and acronyms section.

Price: $17.95

CALCULATOR USER'S GUIDE AND DICTIONARY

By Charles J. Sippl

Contains comprehensive sections on (1) what's available in programmable calculators in today's market — including comparisons (2) how to use most units ranging in price from $50 to $3000 (3) a 7000 term dictionary section relating to calculators.

Programmmable calculators are now the keyboard computers for the masses — easily understood and usable by anyone who knows the terminology — students, businessmen, professionals, etc. However, you would be wise to buy a calculator ONLY AFTER READING THIS BOOK! Over 450 pages in all.

Price: $9.95

(Also available from technical book stores and selected electronic distributors)

MATRIX PUBLISHERS, INC.
Dept. MS, 207 Kenyon Road
Champaign, IL 61820

Please send me the new MICROCOMPUTER DICTIONARY under your 15 day no risk trial guarantee. If payment accompanies order we pay all shipping and handling charges. (Ill. customers add 5% sales tax)

☐ **Microcomputer Dictionary**
☐ **Calculator User's Guide**

Name ________

Address ________

City ________ State ________ Zip ________

seconds, it will change to a repetition rate of 8 microseconds (Fig. 6). Each time the system is reset, either by shorting D1 or by reapplying power, this pulse should repeat the same slow, then fast, repetition rate sequence. At this point the CPU is fetching and executing instructions properly.

Insert Z4, the 74LS74. Connect the scope to Z1, pin 4. A negative-going pulse of approximately 50 microseconds duration should appear, with a repetition rate equal to the period set by the trim pot earlier (Fig. 7). Careful examination of this pulse will show some jitter in its width (Fig. 8). This amount should be less than 1% of the pulse to pulse spacing.

Connect a key from the input to ground. (If a keyer is used, be sure it is set up to switch positive voltages to ground.) Put the scope on the logic output pin. Set the timebase to 20 milliseconds/division. Send CQspaceCQspaceCQspace . . . After a few characters, the beginning of each character should trigger a series of pulses (Fig. 9), with the series following the space being twice as long (because it is Character-Space sequentially). These series of pulses are the serial TTY output.

Connect the TTY machine or display as shown in Fig. 11. Be sure to watch polarity and grounds. Fig. 11 also shows the configuration for TTL compatible outputs. Now the machine should print the correct translation of the input code. Word spacing will take three or four words to settle down. An automatic CR-LF-LTRS sequence will be output after the first word space following the 64th character of each line. Unless an unusually long word (such as microprocessor) is sent, this will prevent breaking up of words.

Speed (wpm)	Z7 Period
60	22.22 ms
66	20.20 ms
75	17.78 ms
100	13.33 ms

Fig. 10. Z7 timing period for TTY output speeds. One new bit is output for each pulse for Z7. Higher speeds can be obtained by changing the timing components.

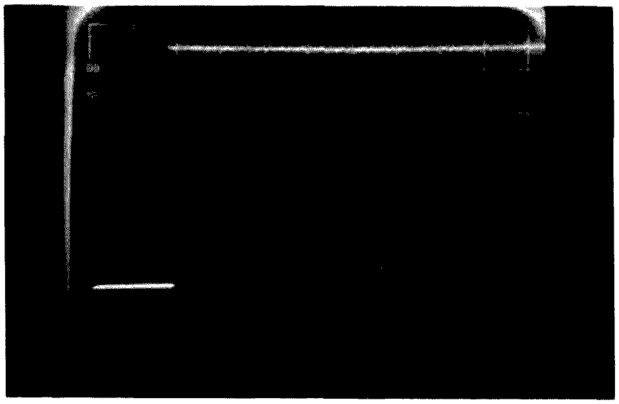

Fig. 8. Interrupt request, $\overline{IRQ}$, Z1, pin 4. Vert: 1 volt/div. Horiz: 20 usec/div.

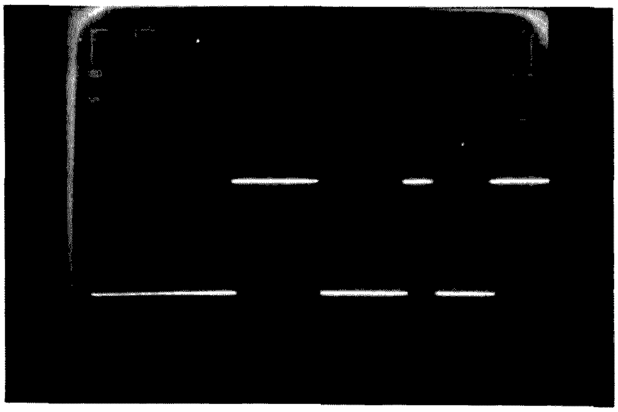

Fig. 9. Logic output. Vert: 1 volt/div. Horiz: 20 ms/div. This is the serial TTY output (set for 100 wpm).

The printer will normally be one character behind. This is because it is still measuring the space until the next mark comes along. Each character will be output as soon as the following one starts.

There is a built-in buffer of approximately 40 characters which is designed to accommodate extra characters like FIGS, LTRS, CR, LF, etc. It will also allow input code speed to exceed TTY output speed for a brief time. The speed range is limited on the high end by the TTY machine speed used. For a 60 wpm printer, it will limit at about 50 wpm code speed, and for a 100 wpm printer, about 65 wpm code speed. A programming change to increase the sample rate used at the input will allow a higher upper limit, with a corresponding increase of the minimum from the normal 5 wpm.

There are two things to check in case of difficulty. First, be sure you are not running your letters together. It is a natural tendency to try to send as fast as possible to test this type of system, and this usually results in running letters together. Remember, the machine is relatively dumb, and doesn't know that – . . . . is really "the" and not "6" because you don't say "6 real thing."

The delayed audio feedback caused by the printing delay can also raise havoc with your timing. A pair of headphones or a silent printer is the cure.

The other thing to check is that the output speed is set carefully to match the TTY machine speed (within 1%). A clue to mismatch here is consistent errors such as extra Ts after, or instead of, spaces, or CR instead of spaces, etc. Also check to be sure the loop supply being used is compatible with the TTY machine. Newer models are fairly tolerant of open circuit voltage and exact current, but older machines are not. Substituting a keyboard for the translator is a quick way to check this.

Conclusion

Your Morse code translator will now operate from a key or keyer. I will be happy to attempt to assist in case of difficulty, but please send an SASE. ■

Reference List

1. MCS 6500 MICROCOMPUTER FAMILY PROGRAMMING MANUAL, August 1975, MOS Technology Inc., Norristown PA.
2. MCS 6500 MICROCOMPUTER FAMILY HARDWARE MANUAL, August 1975, MOS Technology Inc., Norristown PA.

Both of the above manuals are available for $5.00 each from MOS Technology Inc., 950 Rittenhouse Road, Norristown PA 19401.

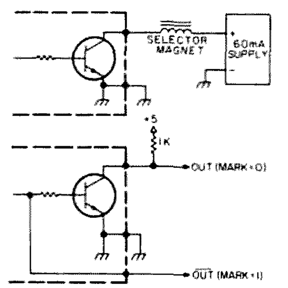

Fig. 11. Output connections.

John Isaacs W6PZV
3175 Val Verde Ave.
Long Beach CA 90808

Number Systems

-- a brief history

Have you ever wondered about the term "binary number" that you have seen in electronics magazines? Since we already have a perfectly good decimal number system, why complicate things with another? If you have a few minutes, here is your chance to learn more about number systems than you ever wanted to know.

One of the most important achievements in the development of science has undoubtedly been the invention of our decimal number system. Counting in units of ten must certainly be due to the fact that man has ten fingers. In some cases, some people have counted in units of five or twenty, which correspond to the use of one hand or of both hands and both feet.

The main use of numbers in early times was for simple counting and record keeping. The numeration methods were designed chiefly for those purposes. With the development of trade and the sciences, the numeration became more and more inadequate. It took a long time before an adequate number system was devised. The Greeks and the Romans did not succeed in this endeavor even though they achieved a rather high development in science. Just imagine performing simple arithmetic with Roman numerals, like dividing MMDXLVI by CCIX using Roman numerals only. About six hundred years ago any simple operations like multiplication and division of large numbers required the services of an expert.

The Hindus and the Arabs are credited with the concept of positional value and the use of the zero, which are explained as follows. Consider the number 74638. We understand this to mean 7 x 10,000 + 4 x 1,000 + 6 x 100 + 3 x 10 + 8 x 1. In the following numbers, the 4 has different values depending on its position: 42,000, 240, 324. In the first number 4 is equal to 40,000, in the second its value is 40 and in the last just 4. Without a 0 to place in some of the positions, how would you write three hundred and six if every position had to have a number? Use of the concept of zero enables us to write 306.

The positional values of the base ten number system are as follows:

$10^3\ 10^2\ 10^1\ 10^0.\ 10^{-1}\ 10^{-2}\ 10^{-3}$

You will note that in each case the value of the position is the radix (10) raised to some power. It is necessary to go to the right of the radix point (decimal point) in order to express fractional numbers.

The general expression for a number is then:

$$N = a_1(r)^{n-2} + a_2(r)^{n-3} + a_3(r)^{n-4} + a_4(r)^{n-5}$$

In the above expression r is the radix or number base and the a values are the position numbers. In order to have a base ten number system that will translate most practical numbers we would have to make n = 5. Using the arbitrary number 2307.602 as an example, and making n = 5, we derive:

$$2(10^3) + 3(10^2) + 0(10^1) + 7(10^0) + 6(10^{-1}) + 0(10^{-2}) + 2(10^{-3})$$

Note that any number raised to the zero power is equal to one (i.e., $10^0 = 1$).

Now we can calculate the positional values for the binary (base 2) number system. They are as follows:

$2^0 = 1$
$2^1 = 2$
$2^2 = 4$
$2^3 = 8$
$2^4 = 16$
$2^5 = 32$
$2^6 = 64$
$2^7 = 128$
$2^8 = 256$
$2^9 = 512$
$2^{10} = 1024$

$2^{-1} = .5$
$2^{-2} = .25$
$2^{-3} = .125$
$2^{-4} = .0625$
$2^{-5} = .03125$
$2^{-6} = .015625$
$2^{-7} = .0078125$
$2^{-8} = .00390625$
$2^{-9} = .001953125$
$2^{-10} = .0009765625$

We now have the conversion factors necessary to convert a binary number to a decimal number.

Let's consider the base 2 number 0011100.0 and calculate its decimal equivalent.

0 x 1 = 0
0 x 2 = 0
1 x 4 = 4
1 x 8 = 8
1 x 16 = 16
0 x 32 = 0
0 x 64 = 0

28 (base 10) = 0011100.0 (base 2)

It may not have been apparent from the preceding, but the fact is that binary numbers are made up of 1s and 0s only. If we were to design an electronic computer or calculator to use the decimal number system, we would find that the decimal number system was capable of the high speeds that are necessary – but it would be very difficult to provide ten stable states so that the computer could handle the decimal numbers. Fortunately, any number can be represented in the binary number system, so computers are designed to use it. They might also use the base 8 or base 16 number systems,

since these have similar properties.

Electronic circuits have been devised that will add, subtract, multiply, and divide in the binary number system. If you are interested in these processes you could consult any text on computer design. Several are listed in the references at the end of this article.

Just to stimulate your interest in the binary number system, let's try working a problem. First we need to know that in the binary system 1 + 1 = 0 plus a carry. The carry is into the next position (or 2^1) so that properly 1 + 1 = 10. This happens in the decimal system also; for example, 9 + 9 = 8 plus a carry into the 10^1 column, so that 9 + 9 = 18. Now let's try out your new understanding of number systems on this little problem. Calculate the first five positional values to the left of the radix point in the base 8 number system (remember, 8^0 + 1). Then calculate the decimal equivalent of the octal number 40. The answers follow the references.

Now that you are up on number systems, you don't have to skip over the articles that refer to the binary number system. Things like electronic keyers use them, especially if there is a memory involved. A lot of the integrated circuits manipulate them also. Have fun! ■

References

Hallerman, ***Digital Computer System Principles,*** McGraw-Hill.

Hawkins, ***Circuit Design of Digital Computers,*** John Wiley & Sons.

Lebow and Reed, ***Theory and Design of Digital Machines,*** McGraw-Hill.

Ledley, ***Digital Computers and Control Engineering,*** McGraw-Hill.

● Answers: 1, 8, 64, 512, 4096; 32.

LETTERS

from page 12

completed board. Just use good quality black type of whatever style turns you on.

Thanks once again, Wayne, for the fine magazine, and I hope to talk to you again next time you get to Albuquerque.

Gary Diamond K5FSB
Albuquerque NM

DON'T LET US DOWN

Where are the MARCH PROPAGATION CHARTS? I just received my April issue of *73 Magazine*, and no chart for March. Of course there was the April Propagation Chart, but this doesn't help for March.

I started taking *73 Magazine* when I found they had Propagation Charts. Thanks, for letting me bring this to your attention. Please don't let us down again.

Ivan S. Miller W5HFU
Oklahoma City OK

Sorry — it won't happen again. Due to a change (acceleration) of our production schedule, we were forced to miss a month of John Nelson's fearless (and unbelievably accurate) forecasts. — Ed.

ARE YOU SURE? (NO)

Re your article in the March '76 issue of *73 Magazine*, page 44.

Are you sure this article should have been published in the March issue? (Does it not belong in an April 1st issue?)

The diameter of the disc has no bearing on wind speed; it would give one count per revolution whether the disc was 1/8" or 1 yard in diameter. The rpm would only be determined by the length of the arms — the shape of the cups minus friction of the *bearings*.

A chip of mirror glued to the shaft to reflect the light from the LED to photo cell would work just as well.

Until reading this article I had thought *73 Magazine* was a serious ham-oriented magazine — not just for laughs. I believe this space should have been occupied by a more realistic theory.

Ulmer S. Anderson W7MHY
Hadlock WA

I published an article on a frequency synthesizer in the Sept. '75 and Oct. '75 issues of *73*, and I am sorry to say that I have only now discovered an error in it. The tuning diodes used in the oscillators should be type MV1404, not MV1401 as listed. The MV1401 diodes have too high a capacitance (nom. 550 pF as opposed to 120 pF for the MV1404), and if they are used the oscillators will only operate with control voltages above 6 volts.

I hope you will publish the above in your letters section; it will save anybody trying to build the synthesizer a great deal of frustration.

Noel Calvin
Berkeley CA

I just finished the April issue of *73* and must comment on the fine articles in this great issue.

Nat Wadsworth's article "Computers are Ridiculously Simple!" was very informative and nicely written; from what I learned it seems to me that Fig. 7, picturing binary number 10101010, should be decimal value 170, not 160 as stated.

No doubt you will have many other letters correcting this. Hi. Hi.

I also intend to give your staff more work on the Reader's Service page this month, as you request.

Keep up the good work on a fine magazine; can we see more articles on ATV and SSTV in upcoming issues?

Charlie McBride VE3GYT
Grimsby ONT

I made a mistake on my Touchtone Decoder article (April, 76) in regards to the parts availability from CONTACT. The price quoted was intended to be for the printed circuit board alone. Inasmuch as there is no way CONTACT can supply the relay and board for the price stated, checks are being returned with my regrets for the error. Incidentally, the wired and tested version is going for $29.95.

William J. Hosking W7JSW
Scottsdale AZ

I've noticed an error in the April 1976 issue of *73*, page 63. The article is entitled "Inexpensive HF-VHF Frequency Standard."

Please note the following correction to the schematic shown. *Pins 2, 3, 6, 7 on each of the 7490 decode dividers must be grounded.* Other than this all looks fine. Thanks.

Gene Hinkle WA5KPG
Austin TX

UPSET

I was extremely upset over the first four lines of an article in your February 76 issue by Larry Kahaner W82NEL (*see page 136*). He said, "While in my neighbor's house one day explaining how I can phone patch her brother in Germany, etc." Third party traffic into Germany is verboten and it is fellows like that that are causing the problems that we now have concerning reciprocal operating privileges here. The German Oberpostdirektion is seriously considering withdrawing privileges for armed service personnel here, i.e., all DA calls. It seems that U.S. amateurs have the mistaken idea that an unlicensed person in the U.S. can talk to a licensed person here if they are physically at the U.S. licensed station. This is not true and that is causing the problem. Licensed operators here can only talk to licensed operators there. I cannot talk to my mother, for example, even if she goes over to my sister's home. My sister is licensed and I can talk to her, but no one else. Also, there is a kicker — if my sister were a Novice, I would not be able to talk to her on YOUR station unless I talk on the U.S. Novice band (which I can do) and she answers me CW, *and* your station is complying with Novice rules with respect to power, crystal controlled, etc. I would not be able to talk to a Technician at all unless it was on 2m.

Hugh G. Vandegrift
APO New York

DOWN OUR THROATS?

Enjoyed seeing you at Vegas. I thought you might like to know that there is 220 activity now in Phoenix. Just a few on 223.5 simplex for now, but there is talk of a repeater or two in the near future. More about that later.

The Summer Hamfest sponsored by A.R.C.A. will be on July 30-31 and August 1, this summer, at Ft. Tuthill in Flagstaff AZ.

I like your new format in *73*, but I have one large gripe. Why are you shoving all this computer/microprocessor stuff down our throats? I buy *73* because I want to read about ham radio type activities, otherwise I would buy BYTE.

Bill Sargent WA7UJH
Phoenix AZ

Hi Bill, good to hear from you . . . re computers, the microcomputer is the most fantastic component for electronic systems yet invented . . . this means you will be using it in almost every piece of ham gear before long. Bill, you can remember the fuss when I started pushing FM and repeaters . . . older timers will remember the resistance I had to sideband and before that to RTTY . . . I'm used to fighting upstream on new ideas. Remember the terrible trouble I had getting hams

Continued on page 138

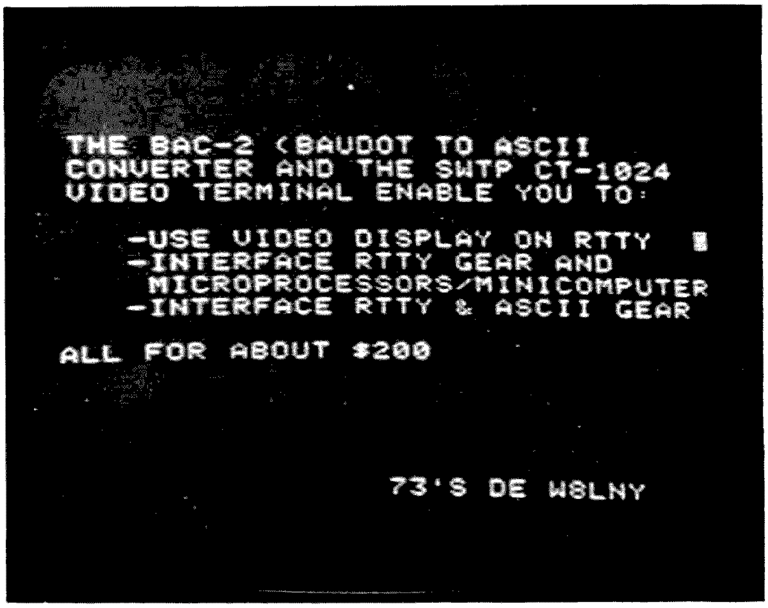

R. David Guthrie W8LNY
2956 London Wall
Bloomfield Hills MI 48013

ASCII/Baudot with a PROM

-- for ribbonless RTTY or computers

Video displays are becoming increasingly popular in RTTY. In addition to eliminating the noise of mechanical printers (appreciated by the XYL), there is no mechanical maintenance or paper/ribbon changing. The video user has the ability to rapidly change baud rates for use in copying commercial stations and to use the video unit together with microprocessors.

Commercial kits start at $395 and up. This discourages many RTTY enthusiasts. Fortunately, Southwest Technical Products has a video display unit for $190.50 with power supply called the CT-1024[1]. It requires the user to accomplish his own Baudot to ASCII code conversion, which is the subject of this article. The result will be very close to the commercial units available with 3 exceptions:

1. *Page Size.*

HAL RVD-1005 – Has 40 characters/line, 25 lines for a total of 1,000 characters ($575); Leland – Also has 40 characters/line, 25 lines ($395 in kit form); CT-1024 – Has 32 characters/line, 16 lines for a total of 512 characters. Another 512 are stored for a 2 page memory.

2. *Scrolling.*

Both the Leland and HAL units scroll up the page. That is, each new line appears on the bottom and pushes the remaining lines up one. The SWTP CT-1024, on the other hand, wraps continuously around the screen. When it gets to the bottom, it starts over again at the top of the screen. The blinking cursor identifies the current position.

3. *Treatment of words at end of line.*

Both the HAL and Leland units start a new line somewhat prior to the actual end of the line on a space character, so as to not separate a word in the middle. This is not available on the CR-1024. It would be relatively easy to add with some counter ICs if needed.

Fig. 1. Overview – basic RTTY use only.

Basic Display Overview

Fig. 1 shows the functional flow of data from the RTTY terminal unit to the video display. At this point, you have the equivalent capability of the commercial displays previously discussed.

Fig. 2 shows three ways of getting from your present RTTY setup to the TTL logic level signals required by the BAC-2. Note that the output of the ST-5/ST-6 terminal units is the same as the RS-232C commercial data standard so that modem out-

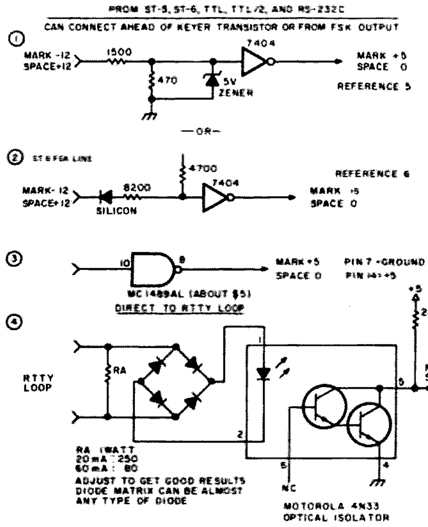

Fig. 2. Connection from RTTY loop to BAC-2.

puts could be treated the same way. Two of the circuits are described further in the references. The current loop interface can be used with any terminal unit and may be of interest to non-RTTY microprocessor users who want to use Baudot teletype equipment. The current loop interface is totally isolated from the loop.

Fig. 3A details the heart of the unit – the Baudot to ASCII converter – dubbed the BAC-2 (someone has probably designated a BAC-1!). The circuit provides:

1. Serial to parallel conversion of incoming Baudot signals using a UART and multiple speed clock for various baud rates.
2. Conversion to ASCII using standard 8223 PROMs (programmable read only memories).
3. Letters/figures case shifting from the 8223s to U4 wired as a cross coupled flip flop.

Fig. 4 details the connection of the BAC-2 basic unit to the SWTP CT-1024 terminal unit. Keyboard connections are specified – the user can also go in via the pins on the back of the unit. With parallel data, keep the lines between the BAC-2 and CT-1024 *extremely* short. Over 18 inches and ringing is likely to occur. The BAC-2 might be mounted right on the CT-1024 as shown in the picture.

Optional Circuits

Up to this point I have described using the BAC-2 primarily for RTTY copying. This will undoubtedly serve the needs of many readers. However, with microprocessors becoming more available and inexpensive every day, you might want to plan ahead now. I have a microprocessor using the Motorola 6800 CPU that provides all of the functions of RTTY Selcal, CW and RTTY ID, FIFO/UT-4 buffer storage, automatic transmitter control, ASCII-Baudot code conversion, and numerous other RTTY goodies. Use of a microprocessor is very easy and far less complex than wiring up a lot of discrete components for functions. Moreover, the functions can be changed much more quickly and easily by just changing the program.

If your future plans call for a microprocessor, you should plan now to get into serial mode rather than parallel mode for transferring data. Parallel mode has two disadvantages from my point of view:

1. Line lengths and interfacing techniques get tricky as you add devices and circuits. Serial start-stop, on the other hand, is very forgiving and insensitive to glitches on the leading and trailing edges of pulses.
2. It is a snap to switch electronically between several input and output devices in serial mode. With parallel data either data selectors (such as the 74157) or tri-state buffers are needed. Further, the timing sequences for strobe pulses to indicate a character ready get pretty tricky with tri-state devices. Timing chips and extra circuitry will quickly cost far more in dollars and time than a couple of UARTs.

Fig. 5 shows a functional overview using the BAC-2 in a RTTY system with serial data flows. All data is flowing in TTL logic format (Mark = +5 V, Space = 0 V). Other units you may have can be readily added by converting them from/to serial mode. While the NAND and inverter gates don't really belong in a functional diagram, they help show how the pieces are integrated. The only things needed to be added for complete versatility are some switches to select/control the serial data flows as needed for use with the microprocessor. They can be omitted at this point for display use only. Note that the 8th or parity bit is ignored in all ASCII circuits. The steps through Fig. 3A are the same as the basic unit discussed previously. In Fig. 3B a PISO (Parallel to Serial Output) circuit is shown. The NE555 timer should be set to 110 Hz for 110 baud or 300 Hz for 300 baud use. It is simple and reliable and is discussed in depth in the *TTL Cookbook*[2]. Note some deviations from the *TTL Cookbook* diagram – the circuit as shown in the book does not work. Probably some minor typos in printing of the book. The same circuit is shown again in the path from the ASCII keyboard (if used) to the serial data flow. Use of an optional circuit between the keyboard and PISO to do things like repeat key, counting characters, and so forth may be desirable and is discussed in a past issue of *73*[3].

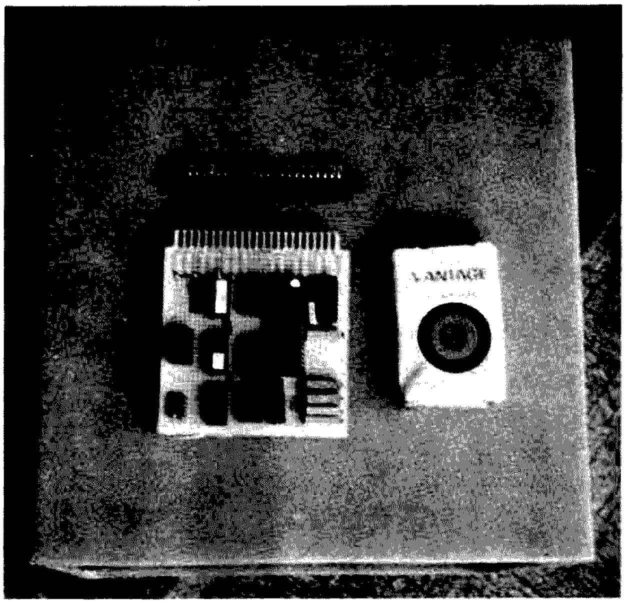

The BAC-2 and PISO Optional Circuit Board. A pack of cigarettes is included to show size and is not required for successful operation.

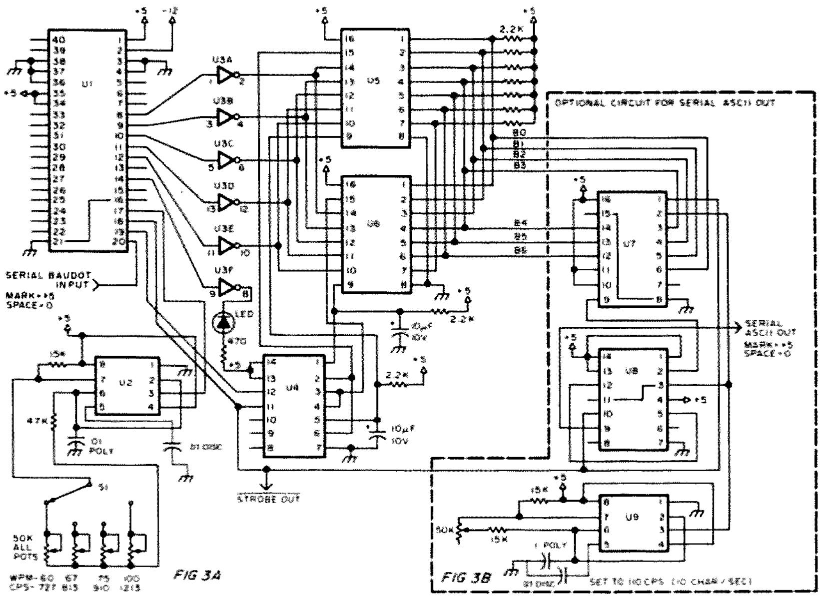

Fig. 3. Baudot to ASCII converter. U1: UART (see text). U2: NE555 timer. U3: 7404 6-inverter. U4: 7400 4-NAND. U5, U6: 8223 PROM. U7: 74165 PISO register. U8: 7474 flip flop. U9: NE555 timer. All resistors: ¼ W 20%. S1: single pole, 4 position rotary. LED: any LED.

Use of two gates provides the mixing of ASCII signals from the keyboard, BAC-2, and/or microprocessor. If not using a micro at this time, simply leave the connections open and tie the ASCII from the microprocessor to +5 V for now.

Fig. 6 shows a serial to parallel (SIPO) converter to front end the CT-1024 terminal. Not much to hooking it up. SWTP also has a CT-S kit available for $39.95. It involves a lot of conversions from/to the commercial RS-232C standard, which is nice if you use it. The SIPO circuit can be built for less than $10 depending on where you get the UART.

We use Fig. 4 again to interface from the SIPO to the CT-1024 terminal. Same leads and terminology — just a different source.

Fig. 7 is optional and converts the serial data from TTL to the commercial RS-232 standard for use with an "outside world" terminal such as commercial computer video displays, printers, or 33 teletypes with RS-232 conversion built into the TTY.

At this point, you are probably wondering where the ASCII to Baudot circuit is. We have everything flowing everywhere but back to the teletype. The answer is there isn't any! The microprocessor provides the tool for the code conversion and the FIFO type buffering of data. If you don't plan on a micro, a circuit to convert from ASCII to Baudot can be constructed and was described in a recent *73* issue[4]. The micro also provides for CW/RTTY ID, "Here is" Key, and other goodies to the RTTY system.

Construction of the BAC-2

The circuit was constructed using wire wrap methods. Not only is it inexpensive, relatively fun (you can overlap wrapping and watching TV at the same time with the family), but also totally flexible as far as experimenting and making changes. Requirements are a wire wrap tool[7], some wire (#30 Kynar — $10 for 1,000 feet usually, or available prestripped), a wire stripper (filing a notch in a pair of needle nose pliers with cutter is good), wire wrap sockets, and a board. Radio Shack has

The CT-1024 Terminal Unit mounted on a board with power supply in rear. A SIPO converter is standing upright on the back of the unit.

BAC-2/SIPO	CT-1024 Connector J9
B0	1
B1	4
B2	5
B3	7
B4	8
B5	11
B6	12
$\overline{\text{STROBE}}$	10
+5	2
−12	6
GROUND	3

CT-1024 Connector J3

Jumper pin 3 to pin 7 to force erasing each line prior to data entry.

CT-1024 Wiring Option

Jumper 1 to 3 for negative going strobe.

Fig. 4. BAC-2 parallel interface to SWTP CT-1024 terminal.

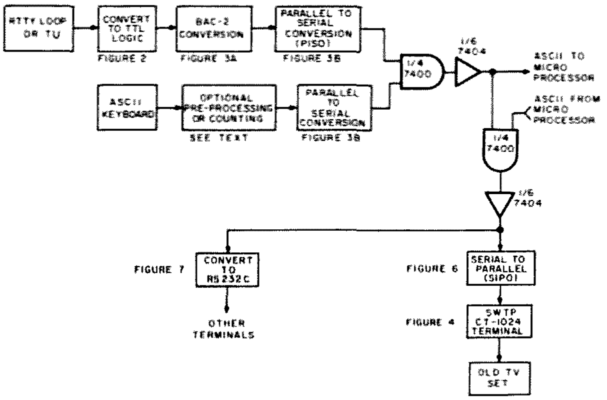

Fig. 5. Functional overview — serial option.

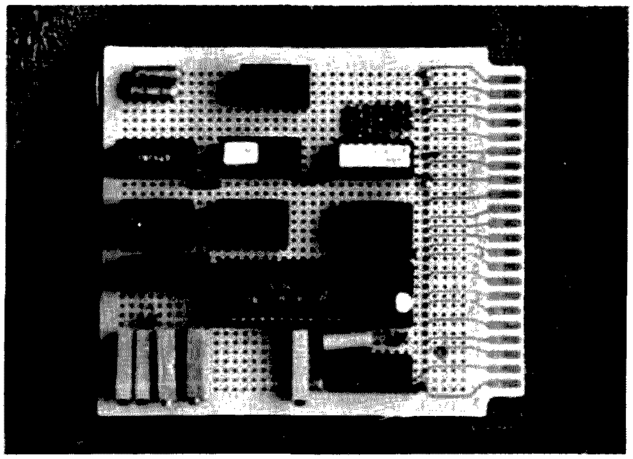

The BAC-2 converter board (subject of this article). The one chip on the side opposite the 5 trim pots is not part of the article circuit (corrects an error in programming my PROMs).

a new board (276-152) for $2.99 which provides space for IC sockets and a dual 22 pin edge connector. The mating connector (276-1551) is also $2.99. Watch out for some boards that have holes every .200 inches rather than .100 inches per the catalog specs. Somehow these crept into stock in a few stores and should be avoided. The board includes the PISO circuit of Fig. 3B. You may want to consider crystal control of the baud rates using circuits that have appeared from time to time in the *RTTY Journal* or *73 Magazine*, if a counter is not available. I have had no trouble with the NE555 timers. Of interest in Fig. 3A is an LED indicator connected to pin 14 of the UART. If it flashes, the incoming data has no valid stop bit. This is super for copying commercial stations with varying shifts, baud rates, and upright/upside down shifts. Just experiment with the controls until the bad stop LED goes out.

Readers who have built a UT-2/UT-4, or other equipment incorporating a UART, can skip U-1 and U-2 in the diagram and connect directly to the code conversion circuits in parallel form. Likewise, the UART can be used to up speed convert at no extra charge by wiring up the transmit side of the UART to convert all Baudot to, say 100 wpm.[6] The transmit side of the UART cannot be used for the serial ASCII output in Fig. 3B due to the limitation that it be used with either 5 or 8 bit code on both sides (you can't split it). When a valid character has been received by the UART, the data received line (pin 19) goes high. It is inverted and connected to the data received reset (pin 18) to reset the UART. The data is available prior to the data received line going high and stays so until the next character comes along allowing plenty of time for the 8223 PROMs to convert the code. The reset (pin 18) gives us a strobe line that is negative going to trigger the PISO circuit or the CT-1024 terminal depending on hookup.

The received data (pins 12-8) of the UART are buffered by 7404 hex inverters to protect the UART, provide the drive for more than one code converter chip, and allow use elsewhere.

Code conversion is accomplished by two 8223 PROMs. These are available from a variety of sources. A self-programming technique was described as a part of another circuit in *73*.[8] The author of that article also mentions references for programming. Fig. 8 shows the bits to be programmed (blown to 1) on the 8223s. These are the Mark-Sense cards used by Hamilton-Avnet, a major wholesale distributor of ICs. Hamilton charges $8.95 each to provide an 82S23 (newer version of the 8223) already programmed ($6.45 + $2.50 programming) per the specs of Fig. 8 if you have prepared the card. The cards shown are for unshift on space — bit 7 is used to select the other chip when going from letters to figures. Terminology for the two chips is described in Fig. 8 for communication purposes together with the distinction between having unshift on space or not. If you want the option of switching between unshift on space or not, you might add another 8223 with a switch to the enable line (pin 15), or add some gates to select the

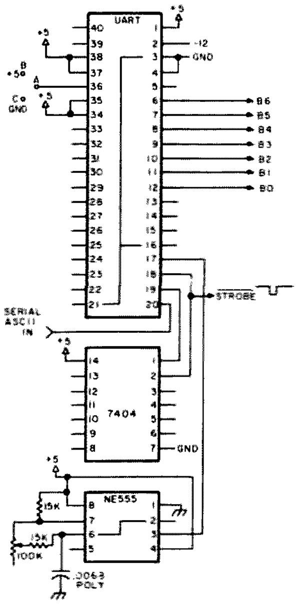

Fig. 6. Serial in/parallel out (SIPO) for ASCII code. Jumpers: A — B, 2 stop bits; A — C, 1 stop bit. Adjust for 16x baud rate: 110 baud = 1760 Hz; 300 baud = 4800 Hz.

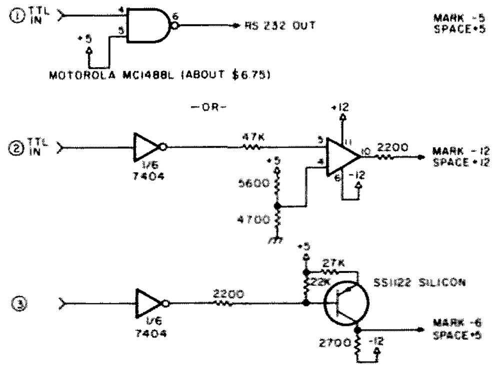

Fig. 7. TTL to RS232-C conversion.

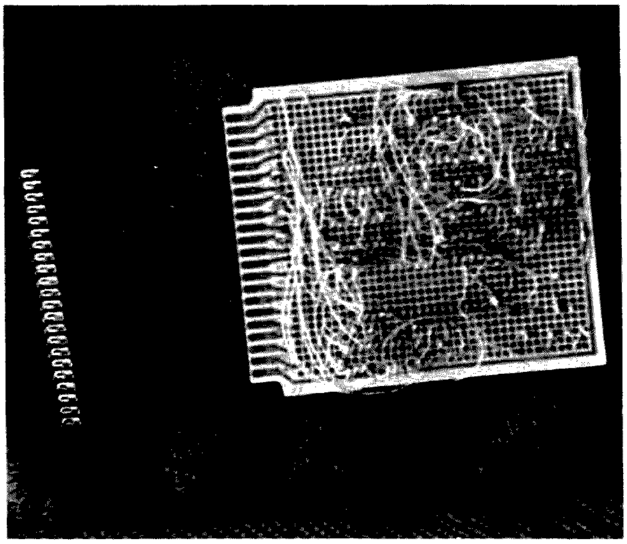

Flip side of BAC-2 board. The wire for wire wrapping is a very pale yellow and doesn't show very well.

character yourself. Note that the Baudot control functions, Letters, Figs and Blank, are all translated to the ASCII Rubout (all 1s) character to be ignored by either your microprocessor or video display. The two 10 uF capacitors prevent the flip flop for letters/figures from triggering as the 8223s change state.

The CT-1024 Display Unit Construction

The SWTP display unit is available in kit form for $190.50.[1] Boards only are also available for $47.50. The ICs and discrete components can be purchased from *73* advertisers for $50-70 in total. Readers with a well-endowed junk box might want to go the board route to save money. Caution: The boards are very complex and built to excellent and exacting standards by SWTP. I would not recommend attempting to make them yourself or to purchase them from anyone other than SWTP. *Radio Electronics*[9] magazine carried a series of articles on the CT-1024 if you want to read more prior to making a decision (the TV Typewriter II in the series). I don't recommend the TV Typewriter I (Sept. 73 *RE*), as some additional interfacing is needed for it to properly handle the line feed, carriage return, no display of rubouts, scrolling, clear, etc. The TVT I is tough to use either with a micro or RTTY without extensive rework.

A feature not described by SWTP is to tie pin 3 to 7 of the cursor socket (J3). This causes the CT-1024 to clear the next line upon receipt of a CR/LF combination. Without this, it provides a very confusing display. It automatically starts a new line and clears it when the end of a prior line is reached (non-overline) when wired this way.

Assuming that you have built up the CT-1024 in one form or another, the next step is to interface it with a TV set. The CT-1024 instructions provide an interface to a Motorola TV. Lancaster[10] discusses interfacing video signals to TV sets in depth in a recent BYTE article, and will have this available in a "TV Typewriter Cookbook" shortly. You should be able to test the CT-1024 by grounding the data line that you want to be a zero and then grounding the strobe line to see that it is working. An ASCII keyboard could also be attached to check it out.

The SIPO (Serial In/Parallel Out) Circuit

The circuit in Fig. 6 can be readily constructed on perfboard or the same Radio Shack boards discussed previously. Set the NE555 timer

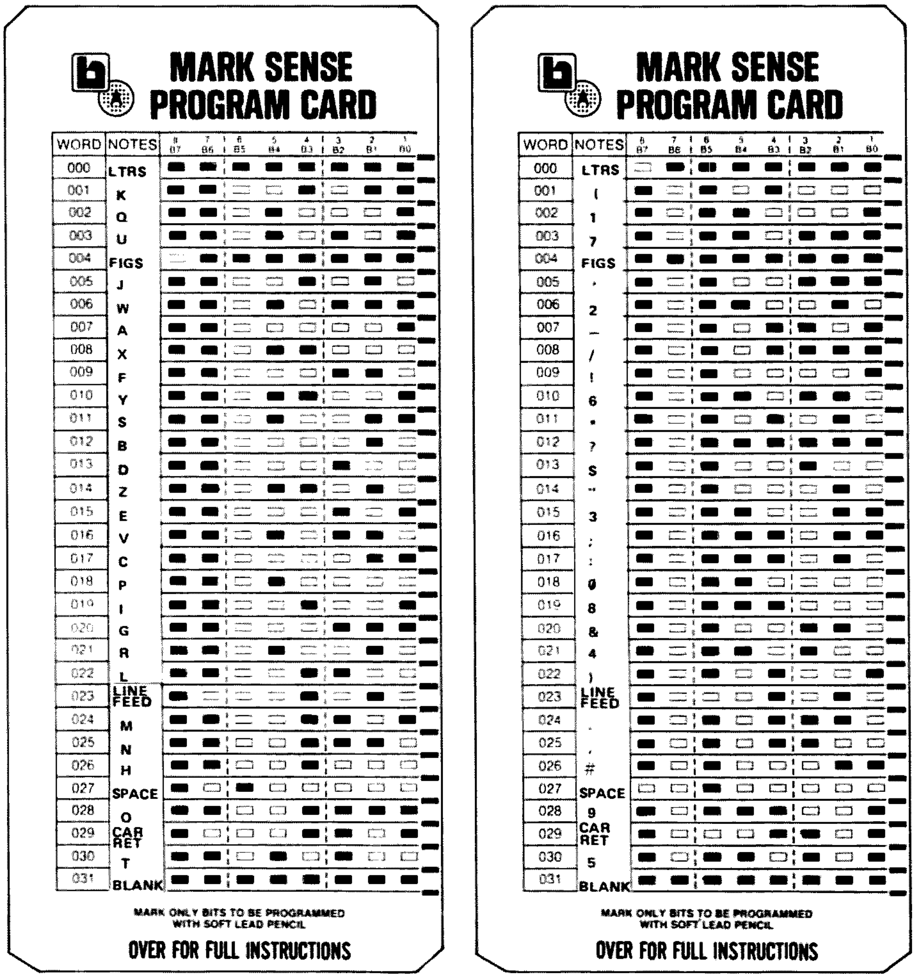

*Fig. 8. 8223 read only memory coding. Bell prints as *. Blacken B7 (first box) to block unshift or space.*

rate to 16x the baud rate; i.e., for 110 baud/10 characters per second, 1760 Hz would apply. Jumper A to B for 2 stop bits (110 baud), and A to C (300 baud +) for 1 stop bit as necessary.

Conversion to RS-232C Standard Data Logic

Fig. 7 shows possible ways to convert from TTL to RS-232C logic. Either results in pretty much the same thing. The trade-off is what power you have available versus using discrete components.

UART Considerations

The UARTs specified in the various circuits are the "standard" variety. Makers and models are as follows:

1. Texas Instruments – TMS6011.
2. General Instrument – AY-5-1013 or AY-5-1014. The 1014 is nice in that no −12 V is needed – pin 2 is left unconnected.
3. Western Digital – TR1602B.

These are readily available from *73* advertisers and other sources.

Summary

I have discussed various ways of setting up the conversion from Baudot to ASCII and the video display. Hopefully, you will be able to select the options that you want. The Baudot to ASCII circuit (BAC-2) in and of itself may be useful for working with a microprocessor in that the program to convert back again can be readily loaded from 5 level paper tape using Baudot equipment. Once loaded, the conversion back can be done via the program. This enables SWTP M6800 microcomputer system users to use 5 level equipment and avoid going to ASCII equipment. I do not have a source for printed circuit boards – let *73* advertisers know if you need them and perhaps someone will make them up. ■

References

1. CT-1024 Terminal, Southwest Technical Products, Inc, 219 W. Rhapsody, San Antonio TX 78216. Prices for:

A. Complete Kit		
	CT-1024 Terminal System Kit	$ 175.00
	CT-P Power Supply Kit	15.50
		$ 190.50
B. Boards Only		
	CT-1024 Board Set	$ 47.50
	MP6800 Processor Connector Set (provides 50 pins and mating molex connectors)	2.50
		$ 50.00

2. ***TTL Cookbook,*** Don Lancaster, Howard W. Sams & Co., Inc., 1974, pp. 262-265.
3. "Using a Bargain Surplus Keyboard," Cole Ellsworth, ***73 Magazine,*** January, 1976, p. 212.
4. "ASCII to Baudot Converter," Cole Ellsworth, ***73 Magazine,*** February, 1976, p. 52.
5. "RTTY Autocall – the Digital Way," L. W. Sanders, ***73 Magazine,*** February, 1976, p. 76.
6. "The Mainline UT-4," Irvin M. Hoff, ***RTTY Journal,*** March, 1975, p. 4.
7. Hand Wire Wrap Tool, Cambion #601-2506. Less than $3 from distributors.
8. "The Computer QSO Machine," B. D. Lichtenwalner, ***73 Magazine,*** January, 1976, p. 80.
9. "TV Typewriter II," ***Radio Electronics,*** Ed Colle, February/March/April, 1975.
10. "Television Interface," Don Lancaster, BYTE Magazine, October, 1975, p. 20.

I/O EDITORIAL

from page 81

Of course it is always possible that pressure on Congress will get so great that the postal monopoly will be broken. Right now it is a federal crime to compete with the post office. The mail could be carried at a good profit by private industry, if it were permitted. Industry could get the postal system back on its feet if permitted by the bureaucracy and the postal unions, something that doesn't seem even remotely likely.

Last year the post office rang up an $825 million deficit and it is expected to be almost double that by the June 30th end of the current fiscal year.

Every time I pause to think about our having to send a piece of paper from New Hampshire to California in order to communicate a message it makes me angry. It is ridiculous in these times. Letters can be sent by facsimile, by teletype, or some computer code and sent via wire, satellite or microwave. Western Union screwed up . . . if they had been looking ahead they would have gotten aboard some really inexpensive message system. Ma Bell (you probably noticed the page 3 mention, in May, of the wind up of her suit against *73* . . . *73* admitted no fault) could have worked up a good system using Bell wires and communications systems.

The soon to arrive inexpensive small office and home computer surely will blow off the lid. I'm still talking with the salesmen for the large computer firms and they apparently are still completely unaware of the revolution that is brewing in small computer systems. They say, oh yes, the microcomputer will cut the cost of the CPU (central processing unit), but there is no way that the cost of the peripherals is going to come down substantially . . . and after all, the cost of the CPU is not very significant for most systems, so therefore the cost of computer systems will stay up there in the $50,000 plus range for a long, long time.

Baloney.

Please don't tell the ivory tower boys about what is happening . . . about what is coming. We don't need IBM in there . . . or DEC. Let them keep working on their $100,000 systems and selling them the way they are right now. This will make it possible for a whole new bunch of companies to grow into the new field rather than have the old ones just keep getting bigger and bigger.

Let's take a look at the peripherals. One thing we need a lot of with any system are the CRTs . . . call them video typewriters or television typewriters (TVTs) . . . these are the primary input/output devices we will be using. Today you can buy a real dumb TVT for maybe $1500. The more sophisticated ones run double to triple that. I envision a CRT with a keyboard and a lot of smarts selling for under $200. It will have a microcomputer chip in it and be able to do a lot . . . play games . . . let you type letters and edit them . . . store a lot of form letters . . . do bookkeeping . . . keep all sorts of files . . . and a whole lot of things we haven't thought of yet. It will need some sort of file cabinet memory storage . . . probably not invented yet.

There are some storage devices in the works. Right now it costs about $5000 for a floppy disk system . . . that should drop to about $1500 in a few weeks when Diablo's new dual $1000 floppy drive is released. Others are in the works for $600. Somewhat slower tape systems will be able to hold enormous amounts of data . . . and at prices which will make DEC salesmen shake their heads in disbelief.

Speaking of Bell . . . the phone company got itself into the Blue Box situation because some engineers ignored a lot of the savvy of other engineers who warned them that using the same lines for signaling and customers was a bum deal. In the long run it is costing Bell heavily for trying to use one pair for everything. A relatively few signaling lines could switch vast numbers of communications lines . . . and there would be no problem with customers sending signals to bollix the charge meters.

Funny thing about the series we published on the phone circuits . . . until Bell made a big deal about it no one seemed to pay any attention. Bell could hardly have gone more out of its way to make sure that the article was noticed . . . coast-to-coast publicity on the radio, television and in the press! They sure brought a load of inquiries on *73* for copies of the magazine or the articles . . . we probably could have sold several thousand copies of the material if we'd been interested in helping people to defeat the phone system . . . but we just turned down all the requests.

Now, after paying several thousand dollars in legal fees, I don't think I should have been quite as solicitous of Bell's interests. On the other hand, after reading the underground telephone newsletter, I am convinced that Bell is able to locate Blue Boxes fairly fast these days and the circuits, even if people discovered how to use them . . . which was not explained in the articles . . . you had to know that or read it elsewhere . . . they would have gotten into trouble.

The recent arrival of programmable pocket calculators at more affordable prices offers the serious ham a new tool to improve his DX through proper antenna orientation. It also gives him a very good excuse for buying one of those very interesting new calculators that can be taught to perform in seconds what would otherwise be a rather messy calculation. After all, with the investment already made in a two gallon linear, hundred foot tower, and stacked yagis, it would be a shame not to get through the pileup because the antenna was pointed wrong. So will buying a programmable calculator fix this? It's not quite that easy, but even if you know nothing of computer programming and aren't too good in math, you can program this very useful computation.

HP-55 User Instructions

Title: Great Circle Azimuth   Page ___ of ___

Programmer: C. H. Brent WB4GVE

STEP	INSTRUCTIONS	INPUT DATA/UNITS	KEYS				OUTPUT DATA/UNITS
1	Load program						
2	Switch to RUN and		BST				
	load constants						
	λ_1 – Latitude*	NNN.N	N	STO	1		
	of QTH	Decimal Deg.					
	$\cos\lambda_1$		f	cos	STO	2	
	L_1 – longitude*	NNN.N	N	CHS*	STO	3	
	of QTH	Decimal Deg.					
	180		STO	5			
	270		STO	6			
3	Enter latitude and	Decimal Deg.	θ		N	R/S	Azimuth
	longitude of remote						in degrees
	location*						from north
*	North latitude and						
	east longitude are +.						
	South latitude and						
	west longitude are –						
	(use CHS key).						

HP-55 Program Form

Title ___ Page ___ of ___

Press CLR in RUN mode, switch to PRGM mode. Then key in the program

LINE	CODE	KEY ENTRY	X	Y	Z	T	COMMENTS
00.							-180° If 0 < $(C_2 - C_1)$ < 180
01.	34	RCL					
02.	03	3					For Greeneville TN
03.	51	−					λ_1 = 36.167
04.	33	STO					L_1 = -82.667
05.	04	4					
06.	31	f					
07.	13	cos					
08.	34	RCL					
09.	01	1					
10.	31	f					
11.	14	tan					
12.	71	×					
13.	22	x⇄y					
14.	31	f					
15.	14	sin					
16.	51	−					
17.	34	RCL					
18.	04	4					
19.	31	f					
20.	12	sin					
21.	81	÷					
22.	34	RCL					
23.	01	1					
24.	31	f					
25.	13	cos					
26.	71	×					
27.	32	f^{-1}					
28.	14	$\tan^{-1}$					
29.	34	RCL					
30.	06	6					
31.	81	÷					
32.	00	0					
33.	34	RCL					
34.	04	4					
35.	31	f					
36.	-46	x<y · 46					
37.	61	+					
38.	34	RCL					
39.	07	5					
40.	31	f					
41.	-46	x<y · 46					
42.	22	x⇄y					
43.	23	↑					
44.	51	−					
45.	-00	GTO-00					
46.	23	↑					
47.	23	↑					
48.	-00	GTO-00					
49.							

REGISTERS	
R_0	
R_1	λ_1
R_2	$\cos\lambda_1$
R_3	L_1
R_4	$(L_2 - L_1)$
R_5	180
R_6	270
R_7	
R_8	
R_9	
$R_{.0}$	
$R_{.1}$	
$R_{.2}$	
$R_{.3}$	
$R_{.4}$	
$R_{.5}$	
$R_{.6}$	
$R_{.7}$	
$R_{.8}$	
$R_{.9}$	

Chester H. Brent WB4GVE
149 Indian Hill Drive
Greeneville TN 37743

Aim Your Beam Right

-- with a programmable calculator

Before proceeding further, some mention should be made of current practices among amateurs. All too often a ham utilizes great circle maps or azimuth information determined for a location considerably different from that of his QTH. This error, together with the tolerances encountered in orientation toward true north, mechanical drive backlash, and direction indication, can result in an appreciable loss of signal strength in the desired direction. The worst part is that the better the antenna, the less tolerant it is of error in direction.

The problem of finding true north, orienting the antenna, zeroing out the indicator and backlash error, and using maps and/or formulas for determining direction are all covered in various ham publications. Assuming proper attention to all the mechanical requirements yields acceptable accuracy, determination of the proper direction is the next concern. Great circle maps are good if your QTH happens to be near the map center. Otherwise, you are left with the pin, string, and globe approach. There are spherical trigonometry formulas one can use, but nobody in his right mind would recommend them. If one is reasonably careful in performing the calculations, a "correct" angle can be determined. Whether the angle is positive or negative, is referenced to north or south, or is the long or short path, is much in question. After much frustration, I set about to find a means of determining the azimuth from my QTH to any point on the earth without having to perform any calculations, map perusal, or thinking. Also, I had to find some good use for that HP-55 I had bought on impulse. (The XYL says the main difference between men and boys is the price of their toys.)

My math was too rusty to rely on, so I engaged a friend

City	Lat.	Long.	Azimuth
Bogota	4.5	-74.3	158.6
Calcutta	23.6	88.4	4.0
Canton	23.1	113.3	339.3
LaPaz	-16.5	-68.4	158.8
Perth	-32.0	115.9	290.3
New York	40.8	-74.0	91.5
Los Angeles	37.8	-122.4	272.9

Table 1. Practice examples (azimuth from Chicago: 41°52' N., 87°38' W.).

and math major to help develop a formula which not only could be programmed with a minimum of key strokes, but also permitted the calculator (not me) to determine the short path with a test and conditional branch. The basic formula is included in case you need to modify the instructions for a different instruction sequence (the algebraic vs. RPN system). For Hewlett-Packard and probably other RPN types, you can go right to the program.

The HP-55 has a clock for timing QSO IDs or can be used for metric and temperature conversions needed for foreign contacts. One precaution: Run the ac charger cord through grounded braid if there are large rf fields around. A further suggestion: Determine the azimuths to a few places in the manner you currently use, take this program to your friendly calculator dealer and have him check you out before you spend your money.

The basic formula is:

* * * * * * * *

$$\text{Azimuth} = 270 + \tan^{-1}\left[\cos\lambda_1 \quad \frac{\tan\lambda_1 \ \cos(l_2 - l_1) - \tan\lambda_2}{\sin(l_2 - l_1)}\right]$$

* * * * * * * *

where

λ_1 = latitude of QTH
l_1 = longitude of QTH
λ_2 = latitude of distant station
l_2 = longitude of distant station

The procedure to follow is simple. The PRGM switch places the calculator in the learn position. The program is loaded into memory by keying in the strokes listed on the Program Form. The switch is placed in the run position, the BST button sets the program at the starting point, and you are nearly ready to start. There is some information that must be loaded into memory (because there wasn't room in the program for it and it can change for different QTH locations). This information is the QTH latitude, cosine of this latitude, QTH longitude, and two constants, 180 and 270. The formula was derived with *east* longitudes and *north* latitudes being positive numbers. The CHS (change sign) key must be used for *south* latitudes and *west* longitudes. Maybe that doesn't sound too simple, but it is only done one time. From then on the calculator displays the short path azimuth to any point if the latitude of the remote location is entered (ENTER), followed by the longitude, and the pressing of R/S.

The calculator can be left on in the shack and used to perform other calculations without affecting the stored program.

If the difference of longitudes $(l_2 - l_1)$ lies between zero and 180 degrees, then 180 must be subtracted to get the short path azimuth. Also, to avoid the denominator becoming zero (division by zero not allowed), some small amount can be added to the home QTH longitude (like 0.00001) when that constant is entered.

The following example happens to be the same as that in the ARRL *Antenna Handbook*. What is the azimuth from Chicago to Cairo? (Chicago: 41°52' N, 87°38' W) Converting to decimal degrees, key in 41.87 STO 1, f cos STO 2, 87.63 CHS STO 3, 180 STO 5, 270 STO 6.

To find the azimuth from Chicago to any place, key in the other place's latitude and longitude, available from an atlas, map, or world almanac. (Cairo: 30°00' N, 31°14' E) Key in 30 ENTER, 31.23 R/S, and read the answer displayed as 49.35° or 49° 20', the clockwise azimuth from true north. ■

CONTESTS

from page 15

2 meter bands, but repeater contacts are not allowed. Only one transmitter in operation at one time and no crossband contacts. Phone and CW are separate contests and must be scored as such.

FREQUENCIES:
Phone – 1850, 3950, 7235, 14330, 21365, 28525, 51000, and 2 mtr simplex. CW – 1810, 3535, 7035, 14035, 21035, 28035, 50050, and 144050. Novice – 3725, 7125, 21125, 28125. Please do not interfere with any nets or other traffic sessions!

EXCHANGE:
MINN stations send RS(T) and county; others send RS(T) and ARRL section or country.

SCORING:
Score 1 point per QSO, Novice QSOs count 3 points. MINN stations multiply points by number of sections and DX countries (NOT US or Canada). Others multiply QSO points by number of MINN counties (87 maximum). Any stations using 250 Watts or less multiply final score by 1.5. Special events call station will count 5 points per QSO.

ENTRIES:
Logs must include: date, time (GMT), band, mode, and contest exchange. Stations making 50 or more QSOs must include a check sheet for each band and mode. Usual disqualification criteria. Logs must be postmarked by July 2nd and received by July 9th to be eligible for awards. Mail entries to: HARC, c/o WBØMAO Steven J. Gardner, PO Box 261, Staples, MINN 56479. Please include your rig description and an SASE for results.

ARMED FORCES DAY BANDS

Station	Military Freq. (kHz)	Mode	Amateur Band
WAR	4001.5	CW	3.5 - 3.75
Washington	4020	LSB	3.775 - 4.0
D.C.	4030	RTTY	3.65 - 3.775
	6997.5	CW	7.0 - 7.15
	14405	CW	14.0 - 14.2
	20994	USB	21.25 - 21.45
NAM	3385	CW	3.5 - 3.75
Norfolk	4012.5	RTTY	3.65 - 3.775
VIRGINIA	4040	LSB	3.775 - 4.0
	6970	LSB	7.15 - 7.3
	7301	CW	7.0 - 7.05
	7380	RTTY	7.1 - 7.15
	7385	CW	7.05 - 7.15
	13827.5	RTTY	14.1 - 14.2
	14385	USB	14.2 - 14.35
	14400	CW	14.0 - 14.1
	148.410 MHz	FM	
	150.90		
NPG	4001.5	LSB	3.775 - 4.0
San Francisco	4005	CW	3.5 - 3.65
CALIF	4010	CW	3.65 - 3.75
	6989	CW	7.0 - 7.075
	7301.5	LSB	7.15 - 7.3
	7347.5	RTTY	7.0 - 7.1
	7365	CW	7.075 - 7.150
	13922.5	RTTY	14.0 - 14.15
	14356	USB	14.2 - 14.275
	14375	CW	14.0 - 14.1
	14389	USB	14.275 - 14.35
	20983	CW	21.0 - 21.2
	20998.5	USB	21.27 - 21.4
Mt. Vaca	49.995 MHz	AM/USB/CW	50.0 - 51.0
	143.995	AM/USB/CW	144.0 - 146.0
	222.0	AM/USB/CW	221.0 - 222.5
Mt. Diablo	148.41 MHz	AM/RTTY	145.0 - 146.0
	148.95	FM	146.0 - 148.0
AIR	4025	LSB	3.775 - 4.0
Washington	7305	LSB	7.15 - 7.3
D.C.	7315	CW	7.0 - 7.3
	13997.5	CW	14.0 - 14.2
	14397	USB	14.2 - 14.35

RSGB NATIONAL FIELD DAY
Starts: 1700 GMT
Saturday, June 12
Ends: 1700 GMT
Sunday, June 13

The only eligible entrants for this contest are G, GC, GD, GI, GM, and GW stations. However, overseas stations are welcome to submit check logs. A certificate will be awarded to the overseas station in each continent whose check log shows he has contributed the most points to competitors. All contacts must be on CW only using the 160 to 10 meter amateur bands. Each station may be worked once on each band but crossband contacts are not allowed.

EXCHANGE:
RST and QSO number.

ENTRIES:
Logs must show date and time in GMT, callsign of station worked, and exchange sent and received. Use separate logs for each band and only use one side on each sheet. A cover sheet must also be included showing contest name, date, claimed score, callsign, name, address, station details, and signed declaration (standard declaration). All entries should be addressed to: RSGB HF Contest Committee, c/o D. Thom G3NKS, 20 Bramble Close, Copthorne, Crawley, Sussex, ENGLAND, RH10 3QB. All entries must be postmarked no later than 15 days after the contest.

WEST VIRGINIA QSO PARTY
Starts: 0100 GMT Saturday,
June 12
Ends: 0059 GMT Monday,
June 14

All amateurs are invited to participate in the QSO Party sponsored by the West Virginia State Radio Council. There are no operating time limits during the contest period. The same station may be worked on different bands for additional points, but only once per band regardless of mode. West Virginia stations may work each other.

FREQUENCIES:
35 kHz up from the bottom edge of each CW band and 10 kHz inside the general portion of each phone band.

EXCHANGE:
QSO number; RS(T); and county (if WVA), state or country.

SCORING:
A power multiplier will be allowed as follows: 200 Watts or less dc input = 1.5; over 200 Watts dc input = 1.0. Out-of-state stations determine their score by multiplying the number of QSOs times the number of different West Virginia counties worked (55 max). This total is then multiplied by the power multiplier as defined above for the total score. West Virginia stations multiply the total number of QSOs by the sum of the different WVA counties, US states, and ARRL countries worked. This result is then multiplied by the power multiplier to determine the final score.

AWARDS:
To be eligible for an award, a station may have only one unassisted operator. Awards will be issued to the highest scoring WVA station, 1st runner up in WVA, 2nd runner up in WVA, highest scoring station in each state, and the highest scoring station in each country. Decisions of the Contest Committee of the West Virginia State Radio Council will be final.

LOGS/ENTRIES:
Logs must indicate date, time, QSO number, callsign, QSO number received, signal reports, and county, state or country of the station worked. Indicate the mode and band also. Logs should be sent to: West Virginia QSO Party, P.O. Box 299, Dunbar, West Virginia 25064. Logs should be received no later than July 17th, and no logs will be returned.

ARRL VHF QSO PARTY
Starts: 1900 GMT Saturday,
June 12
Ends: 0600 GMT Monday,
June 14

Check the May issue of QST for any last minute changes!

Entrants may operate no more than 28 of the 35 hours during the contest period. The seven hours off-time must be taken in increments of 30 minutes or more. Listening time counts as operating time. All contacts must be made on amateur bands above 50 MHz using authorized modes. Fixed, portable, or mobile operation under one call, from one location only, is permitted. Any transmitter used to contact a station may not be later used to contact another station during the contest period with any other callsign. Contacts made by retransmitting either or both stations (such as repeaters) do not count for contest purposes. Each contact exchange must be acknowledged by both operators before either may claim contact points. A one-way confirmed contact does not count.

EXCHANGE:
Exchange simply ARRL section.

SCORING:
On 50 or 144 MHz count 1 point per contact; on 220 or 420 MHz count 2 points per contact; on higher UHF bands, count 3 points per contact. Final score is then the total QSO points multiplied by the number of different bands for additional credits but crossband contacts are not allowed. Also, aircraft mobile stations cannot be counted for section multipliers.

ENTRIES:
All logs must be postmarked no later than July 7th and sent to: ARRL, 225 Main Street, Newington CT 06111. Logs and entry forms are available through this same address; please include an SASE. Usual awards will be issued and the standard disqualification rules will apply.

ARRL FIELD DAY
Starts: 1800 GMT, Saturday,
June 26
Ends: 2100 GMT Sunday,
June 27

Rules are generally lengthy (2 pages in *QST*); please refer to the May issue of *QST* for detailed information and for any changes since last year's rules.

Briefly, the general rules are as follows:

The contest is open to all amateurs within the ARRL sections; foreign stations may be contacted for credit but are not eligible to compete. Each entry will be classified by type of operation: Class A – Club group set up specifically for Field Day operation operating portable without commercial power; Class B – Non-club stations set up portable without commercial power; Class C – Mobile stations; Class D – Fixed stations using commercial power; Class E – Fixed stations using emergency power for transmitters and receivers.

All entries will further be classified by the number of transmitters utilized. Class A and B stations not beginning to set up before 1800 GMT on Saturday may operate the entire contest period. All others may not operate more than 24 hours total. Each station may be worked once on each band; voice and CW are considered different bands (all voice contacts are equivalent and RTTY = CW).

Class A, B, and C stations may contact anyone, but classes D and E must contact only Class A, B, or C.

EXCHANGE:

RS(T) and ARRL section or country.

SCORING:

Phone contacts count 1 point each and CW contacts count 2 points each. Final score is sum of QSO points times multiplier for highest power used at any time during the contest period, plus bonus points.

Power multipliers: Multiply by 5 if 10 Watts or less dc input power and non-commercial main power source or motor driven generator; multiply by 2 if less than 200 Watts; multiply by 1 if over 200 Watts up to 1 kW; multiply by 0 if over 1 kW (note – dc power on SSB is half PEP power).

Bonuses: (only for Class A or B stations) 100 points for 100% emergency power; 100 points for "natural" powered contact (only one QSO req'd); 50 points for public relations; 50 points for message origination for SCM or SEC; 5 points for each message received and relayed during FD period up to a maximum of 50 points; 50 points for completing at least one QSO on CW via OSCAR.

ENTRIES:

Standard disqualification rules apply. All entries should be sent to: ARRL, 225 Main Street, Newington CT 06111. Official log and entry forms are available from the same address for an SASE.

NOTE: ARRL policy is not to release information on ARRL contests until publication in QST. *Since this is too late for publication in* 73 *Magazine, I will continue to list rules on all ARRL contests based on the previous year's contest rules with reference to the appropriate issue of* QST *to check for any changes or updates. All other contest information will be the latest available at press time. – Bob WA1SCX*

Oscar Orbits

Oscar 6 Orbital Information / Oscar 7 Orbital Information

Oscar 6 Orbit	Date (June)	Time (GMT)	Longitude of Eq. Crossing °W	Mode	Oscar 7 Orbit	Date (June)	Time (GMT)	Longitude of Eq. Crossing °W
16584	1	0058:54	70.2	A	7058	1	0141:43	75.2
16597	2	0153:50	83.9	BX	7070	2	0041:03	60.1
16609	3	0053:46	68.9	A	7083	3	0135:20	73.6
16622	4	0148:42	82.7	B	7095	4	0034:40	58.5
16634	5	0048:38	67.7	A	7108	5	0128:57	72.0
16647	6	0143:33	81.4	B	7120	6	0028:18	56.9
16659	7	0043:29	66.4	A	7133	7	0122:35	70.4
16672	8	0138:25	80.2	B	7145	8	0021:55	55.3
16684	9	0038:21	65.2	AX	7158	9	0116:12	68.8
16697	10	0133:17	78.9	B	7170	10	0015:32	53.7
16709	11	0033:13	63.9	A	7183	11	0109:49	67.3
16722	12	0128:08	77.7	B	7195	12	0009:09	52.1
16734	13	0028:04	62.7	A	7208	13	0103:26	65.7
16747	14	0123:00	76.4	B	7220	14	0002:47	50.5
16759	15	0022:56	61.4	A	7233	15	0057:04	64.1
16772	16	0117:52	75.1	BX	7246	16	0151:21	77.6
16784	17	0017:48	60.1	A	7258	17	0050:41	62.5
16797	18	0112:43	73.9	B	7271	18	0144:58	76.0
16809	19	0012:39	58.9	A	7283	19	0044:18	60.9
16822	20	0107:35	72.6	B	7296	20	0138:35	74.4
16834	21	0007:31	57.6	A	7308	21	0037:55	59.3
16847	22	0102:27	71.4	B	7321	22	0132:12	72.9
16859	23	0002:23	56.4	AX	7333	23	0031:33	57.7
16872	24	0057:19	70.1	B	7346	24	0125:50	71.3
16885	25	0152:14	83.9	A	7358	25	0025:10	56.1
16897	26	0052:10	68.9	B	7371	26	0119:27	69.7
16910	27	0147:06	82.6	A	7383	27	0018:47	54.5
16922	28	0047.02	67.6	B	7396	28	0113:04	68.1
16935	29	0141:58	81.4	A	7408	29	0012:24	52.9
16947	30	0041:54	66.4	BX	7421	30	0106:41	66.5

HAM HELP

I will be glad to help with any phase of amateur licensing. We hold continuing education classes for ham licensing whenever demand warrants. Interested parties are invited to visit the school's club station, or feel free to call.

Richard Bley WB4GVA
Catawba Valley Technical Inst.
Hickory NC 28601
(704) 327-9124

I would be very happy to be of assistance to any prospective ham in this area who is in need of help.

David A. Deem WA3ZXI
8 Hawthorne Lane
Rosemont PA 19010
(215) 525-2684

Please add my name to your ham help list. I would also like to know if you know of any clubs in this area.

J. Bryan Loofbourrow
PO Box 1237
Mountainside NJ 07092

Wanted: adjustment/installation instructions for Hy-Gain TH-2 3-band 2 element beam antenna. Believe this antenna was built about 15 years ago – it uses blue phenolic traps similar to "slim line" traps in 12AVS vertical.

William W. Muessig K4FD
3156 Graham Road
Falls Church VA 22042

I would appreciate a manual or a copy of the schematic diagram of a Model 103B Hewlett-Packard oscilloscope. I will be glad to pay for copies and postage.

Claude Blakeslee WB6GHZ
C/O Mills High School
400 Murchison Drive
Millbrae CA 94030

Help!

Leonard J. Vanella
172 Irving Ave.
Floral Park NY 11001

I'll be glad to help newcomers.

Ross N. Dunnihou WN5MZZ
516 S. Cedar Box 134
Shattuck OK 73858

I need help!

William Cranford
1096 Atlanta Rd. Lot D-39
Marietta GA 30060
(404) 424-1473

Tracking the HAMBURGLAR

SWIPED: SBE – Linear Systems #SB 36, professional type amateur radio transceiver with #SB 36-ACP speaker and power supply. S/n 71128, base station, brushed chrome face, black cabinets. Courier #COP 50 HL, VHF monitor radio, hi and lo band. Brushed chrome face and knobs, black body. Courier #COP 75, VHF automatic scanner, hi band. Brushed chrome face, black body. These items were taken January 26, 1976 from South Fork Electronics Corp., 36 Hampton Road, Southampton NY.

SHANGHAIED: HW-202 transceiver s/n 09512. Has following crystals installed: 07-67, 34/94. Had WB0QGF engraved on outside and inside. Joel Humpke WB0QGF, 516 Zion St., Aurora CO. Taken March 1, 1976 from parking lot of radio station KLMN.

ROBBED: Standard 826M s/n 010230, Cobra 200 s/n 30900140 (220 MHz rig). Both modified with type N rf out connectors. Contact WA2CSE, 516-546-2571.

STOLEN: Clegg FM-278 s/n 27043-1649 taken in Huntington, New York on February 21, 1976. Also Touchtone pad and tone burst generator in minibox. Report to Suffolk County Police 2nd Precinct or call Dave Metal W2FTH, home 864-1130, or business 368-2200.

ABDUCTED: Clegg FM-DX, 2/19/76; Boston, Mass. Slide bracket riveted to top, s/n -056-, Police ID #141449314PTH. WB2ZSD – Call 201-263-0376, anytime.

FILCHED: Realistic pocket scanner has SSN 095-42-1177 engraved on set. Stolen February 29, 1976 at PPRAA Swapfest, Peterson Field CO. Please notify police dept. or James R. Einolf, 12149 N. Piney Ln. Rd., Parker CO 80134, 303-841-2105.

LOOTED: Icom 230 s/n 2403831 taken from my car on 2/21/76 in Bellows Falls, Vermont. Anyone using it after that date will self destruct! Tom Abare K1VNE, 22 Lockwood Street, Bellows Falls, Vermont 05101.

Looking West

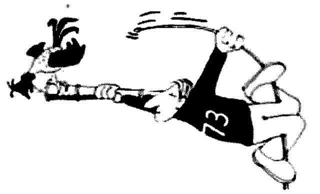

from page 25

your problem and offer simple concrete suggestions towards finding a quick solution. Most of all, he is dedicated to uniting the diverse factions and geographic areas administered by SCRA and thereby to building SCRA into an organization that will serve the needs of all members as well as those who are now non-members operating unsanctioned, uncoordinated systems. His goal seems to be one of "promoting coordination through promoting friendship."

He has already taken some affirmative steps in that direction including dividing the existing technical committee, heart of SCRA, into two sub-committees. Staffed by the best expertise he could muster, those involved with the development of two meters administer the affairs of two meters, and in a like manner, those involved in 220 MHz are determining the future of that band. The best experts of each are working toward a bright future for each.

"Why do this?" you may ask. Simply, who knows more about 220 MHz than those pioneering it at this time? If growth and development of that band are to avoid all the pitfalls and headaches that befell the growth of 2 meters, then it must have the proper guidance. Fred Deeg K6AEH of WR6AFM is head of the 220 task force sub-committee that will oversee this development.

At present, Bob himself is heading up the two meter sub-committee (I told you he was the kind of person that indeed does get involved), and has gotten hold of some of the finest talent in the two-way communication industry, who also happen to be amateurs concerned with the positive growth of VHF, to serve on this committee. I have already noted the part that Jim Hendershot will play, and in addition to Jim, you will find such people as Ray Vonnuman K6PUW, Neal McKie WA6KLA, and a myriad of others selected for their technical ability and overall knowledge of the problems of the geographic areas they represent.

The basic purpose and intent of SCRA has not changed. It is still the same organization that started four years ago to iron out the mess that was two meters in Southern California before its arrival. People like Dick Flanagan, Skip Clark, and Bill Carpenter have taken it from its very infancy to where it is now. In the process, much was accomplished, and at the same time many mistakes were made. From these mistakes, though, has come possibly the most viable of all coordinating organizations to be found anywhere in the nation, one that I personally feel proud to support. SCRA learned from its mistakes, was never too proud to admit that they were made, and has used this accumulated knowledge to benefit the entire Southern California FM community. Now with a broad based new directorship, this organization is again out to conquer new horizons and faces the future hoping to bring more constructive coordination to the Southland. All they ask is the continued support of those who have worked to build the organization, and more important, the support of those who intend to work toward future development of two and 220. Maybe the term "pirate repeater" will soon be a thing of the past here in the Southland. It's a good goal to work towards.

This then brings us to another important topic, but also brings a problem for yours truly. It involves a coordinated repeater facing interference from the users of an uncoordinated system that took up operation on the same channel pair. "Why then," you may ask, "should this cause old 'ITF' a problem?" Well, you see, I happen to be involved with one of the two systems in the controversy (the coordinated one, thankfully) and am therefore torn between my outlook as a repeater user and maintaining my credibility in this column.

Therefore, I hope that the following is a solution to my dilemma, and one that meets with your approval. Rather than personally commenting on the matter, I am writing to the licensees of WR6ABB – PARC, Los Angeles (coordinated), and WR6AFR – Juniper Hills (unsanctioned). I will publish the response of both *unedited.* I will also publish the final report of the SCRA technical committee and thereby permit you to make your own judgments and find your own conclusions.

As a member of the board of directors of the Palisades Amateur Radio Club, owners of WR6ABB, and a control station for that system, my personal views on the matter must remain mine, and I hope that the method I have chosen to report on this meets with your approval and more important, that it thereby permits me to retain my credibility in your eyes. Believe me, it is a very tough position to find oneself in and I hope you never face the same problem.

As usual, we have run out of space before running out of topics. No, we didn't forget our Guatemala wrap-up, the complete AJP story, the latest in public relations, and a myriad of other things. At least you know we will have some goodies for you next month. See you then.

NOTE: The Pottstown Area Repeater Team Hamfest and Flea Market, to have been held on May 23 as listed on page 128 of our May issue, has been canceled.

DULUTH MN
MAY 8

The Twin Ports FM Club swapfest will be held May 8 from 11 am to 3 pm at the First Methodist Church, 6th Ave East and Mesaba Ave, Duluth MN. Talk-in 34/94. Advance registration \$1, at the door \$1.25, booth space \$.75. Write WAØBJY for more information.

SEABROOK NH
MAY 8

The Hosstraders Third Annual Tailgate Swapfest will be held Saturday, May 8, at 11 am at Addams' Campground, Route 286, Seabrook NH off Route 95 at the Mass-NH border. Admission 75¢, dealers included, no commissions or percentages. Excess revenues benefit March of Dimes birth defects campaign. FM clinic sponsored by Saddleback Repeater Association. Talk-in .52, .40-00, and/or 3940 kHz. If any questions, SASE to WA1IVB, Box 32, Cornish, Maine 04020.

GREEN BAY WI
MAY 8

The Green Bay Mike and Key Club's Electronic Hobby Swap will be held on Saturday, May 8, 1976 from 0800 to 1600 at the Army National Guard Building, 800 N. Military Av., Green Bay WI. Talk-in on 146.94. One dollar at the door. Located on Business 41. Easy to find.

COLUMBUS GA
MAY 8-9

The Columbus Amateur Radio Club (Georgia) is holding its annual Hamfest on Saturday and Sunday, May 8 and 9th. The hamfest will be at the Fine Arts Building, Columbus Municipal Fairgrounds, Columbus, Georgia. For further information contact Dennis Hand, Jr. K4ICR, Route 1, Box 172A, Cataula GA 31804.

FORT WALTON BEACH FL
MAY 9

The Playground Amateur Radio Club will hold its Sixth Annual Swapfest Sunday, May 9, 1976, from 8 am until 4 pm at the Fort Walton Beach Fairgrounds. Registration \$1.50 advance – \$2 at door. Free swap tables. For hotel and other information write: Swapfest Committee, PO Box 873, Fort Walton Beach FL 32548.

SOUTH CAROLINA BICENTENNIAL AMATEUR RADIO WEEK
MAY 10-16

South Carolina State Governor James B. Edwards, has issued a proclamation declaring May 10th through May 16th, 1976 as Bicentennial Amateur Radio Week for South Carolina. He encourages all amateur radio clubs in the state to take part in this activity. The Holiday VHF Society of Charleston will be operating a special events station "AA4SC" during the 14th, 15th, and 16th of May from the Governor's Mansion in Columbia, South Carolina. This special station will operate CW/SSB on 10 through 80 meters, FM on 2 meters, and 2 meter-10 meter Oscar satellite communications. A special commemorative certificate will be made available to stations making contact with AA4SC.

WEST LIBERTY OH
MAY 16

The Champaign Logan Amateur Radio Club is holding its 6th Annual Flea Market and Auction on May 16, 1976 starting at 12 pm at the West Liberty Lions Park at West Liberty, Ohio. Free admission, trunk sales and tables \$1.00, door prizes. Talk-in on 146.52 and 146.13/73.

JAFFREY NH
MAY 15

The 1st Annual Fly In and Flea Market will be held Saturday, May 15, 1976 at the Jaffrey Municipal Airport (Silver Ranch) in Jaffrey, New Hampshire. *73 Magazine* will host the event. Picnic facilities, food stand, great ice cream, horseback riding available at Silver Ranch stables across the road from the airport (200 yds). Plenty of hangar space for exhibitors, etc. Come one – come all – if you can't fly – drive – but get here. Jaffrey is 6 miles south of Peterborough on U.S. Rte. 202.

EVANSVILLE IN
MAY 16

The Annual Evansville Hamfest will be held Sunday, May 16th, 1976 at the Vanderburgh Co. 4H Center (8 miles north of Evansville on Highway 41). Large indoor flea market area, displays, grand prize (HR2MS), door prizes, and auction sponsored by the Tri-State Amateur Radio Society. Lunch will be available and admission is free. Talk-in on 147.75/.15 and 146.52/.52. For more info and grand prize tickets contact: Tom Dick WA9QDZ, 2851 Wayside Drive, Evansville IN 47711, (812) 476-2188 or Randy Riggs WB9RDS, 1552 Keck Ave., Evansville IN 47711, (812) 464-3111.

ROCHESTER NY
MAY 21-23

The 43rd Annual Rochester Hamfest, now combined with the New York State ARRL Convention, will be held the weekend of May 21-23, at the Monroe County Fairgrounds, near Rochester NY. Registration in advance (by May 15) is \$3.50; at gate \$4. Banquet tickets are \$8.50. Unlimited outdoor flea market space is available at \$1 per parking space. Indoor flea market space, available by

SOCIAL EVENTS

advance order only, is $5 per table. Ticket orders and information requests should go to: Rochester Hamfest, Box 1388, Rochester NY 14603.

LAKE DELTON WI
MAY 22

The Yellow Thunder Amateur Radio Club will sponsor their 6th annual hamfest on Saturday, May 22, 1976 at the Dell View Hotel in Lake Delton, Wisconsin, starting at 10 am. Meetings and events include: swap shop, DX, VHF, RTTY, MARS, ARPSC, hidden transmitter hunt, ladies activities, liars contest and an evening banquet with entertainment including something new: "The Kitchen Maids." Grand prize: Regency HR2-B. Admission $7 in advance or $7.50 at the door. ($1.50 or $2.00 without the banquet.) For further information contact Kenneth A. Ebneter K9GSC, 822 Wauona Trail, Portage WI 53901.

PORTLAND ME
MAY 22

The Portland Amateur Wireless Association will hold an auction and dinner at the Portland, Maine, Ramada Inn, 1230 Congress Street (just off I295 Exit 5) on Saturday, May 22. Auction will start at 10 am. Dinner will start at 6:30 pm. For more information contact Martin Feeney K1OYB, 38 Howard Street, Portland ME 04101. Phone (207) 775-2274.

SANDUSKY OH
MAY 23

The Vacationland Hamfest will be held on Sunday, May 23, 1976 at the Erie County Fairgrounds from daybreak till 3 pm. Featuring — free camping Saturday night, free transportation to Cedar Point ferry boat dock. Bring the family and let them visit the greatest amusement park in the U.S.A. Plenty of flea market tables, dealers welcome, 8 acres for trunk sales. 1st grand prize: 1200 Watt ac gasoline generator. Tickets are $1.50 in advance — $2 at gate. Flea market vehicles $1 each. For further information or reservations write: E.A.R.S., PO Box 2037, Sandusky, Ohio 44870. Call in on 52-52.

WILMINGTON DE
MAY 23

The Eastern Shore of Maryland Hamfest (second annual), sponsored by the Easton Amateur Radio Society, will be held on May 23, 1976 rain or shine from 10 am to 4 pm. This will be the only hamfest this year on the eastern shore of Maryland or Delaware, south of Wilmington. Located 5 miles north of Easton, Maryland on Rt. #50 at the Talbot Co. Agriculture Center. From Balto-Wash. go across the Chesapeake Bay Bridge and stay on Rt. 50 for approximately ½ hour after crossing the bridge. There will be hamfest signs and talk-in on 52 and 94 simplex and on 146.445-147.045 repeater (Cambridge). Plenty of tables and chairs provided and reasonably priced food and drinks and lots of room and tables for tailgaters. $2 admission and $2 tailgate. For info contact: Tim Meekins K3RUQ, PO Box 805, Cambridge MD 21613 (301) 228-8534.

WABASH IN
MAY 23

The Wabash County Amateur Radio Club will hold their 8th Annual Hamfest Sunday, May 23, 1976 at the 4-H Fairgrounds in Wabash, Indiana. The hamfest will be held rain or shine. There will be a large flea market (no table or set-up charge), technical forums, bingo for the XYLs, free overnight camping with ac hookup, and plenty of parking. Lots of good food at reasonable prices. Admission is $1.50 for advance tickets, $2 at gate. For more information or advanced tickets write to Bob Mitting, 663 North Spring Street, Wabash, Indiana 46992.

KNOXVILLE TN
MAY 29-30

The Radio Amateur Club of Knoxville will hold its annual Greater Knoxville Hamfest on May 29 and 30th at the National Guard Armory, 3330 Sutherland Ave., N.W. Activities will include an indoor and outdoor flea market. Door admission $1 and a chance for a door prize. Tables and space rental for indoor flea market will be $2.50 per table. There will be a banquet on the 29th at 8 pm at Howard Johnson's, West Town at $6 per person. Talk-in on 16/76 — 34/94 and 3980. More information by SASE from Edward L. Melton WB4JGF, 749 Elkmont Rd., Concord TN 37922.

BURLINGTON KY
MAY 30

The Kentucky Ham-O-Rama will be held Sunday, May 30, 1976 (Memorial Day weekend) at Boone County Fairgrounds, Burlington, Kentucky. Ten minutes south of Cincinnati, Ohio near I-75. Prizes, forums, XYL program, exhibits and flea market. Tickets $1.50 advance. For more information contact: NKARC, PO Box 31, Fort Mitchell, Kentucky 41017.

TRENTON TN
MAY 30

The Humboldt ARC Hamfest will be held Sunday, May 30 at Shady Acres City Park in Trenton TN. Flea market, ladies activities, playground. Contact Ed Holmes W4IGW, 501 N. 18th Ave., Humboldt TN 38343.

VINTON VA
MAY 30

The Roanoke Valley Amateur Radio Club is sponsoring their Annual Hamfest to be held at the Vinton War Memorial, Vinton VA on Sunday, May 30, 1976. Registration will be from 7 am until 9 am and the Hamfest and Flea Market will be from 9 am to 3 pm. Registration fee: $1.50 ea., 4/$5. Talk-in frequencies on 2 meters will be 34/94, 28/88, 38/98, and 94 direct.

FLUSHING NY
JUNE 5

The Third Annual Hall of Science Radio Club auction and flea market will be held Saturday, June 5 at World's Fairgrounds, Flushing, L.I. Admission $1.00, sellers $2.00. No sellers commission but 10% fee on auctioned items. Zoo, boating, children's farm, art and science museums adjacent. Field Day goodies galore. For more information write: Box 1032, Flushing NY 11352.

WINFIELD PA
JUNE 6

The Penn-Central Bicentennial Hamfest will be held Sunday, June 6 at the Union Township Volunteer Firegrounds, Winfield PA, 11 miles south of I-80 on Route 15. Contests, auction, flea market — start at noon. Registration $2; XYL, children free, free parking. Contact W3GPR.

HUNTINGTON WV
JUNE 6

The Tri-State Amateur Radio Association (TARA) 14th Annual Hamfest will be held Sunday, June 6th at 11:30 am at Camden Park, Rt. 60 West, Huntington WV. Talk-in W8VA/8 146.04-.64, .16-.76, and .34-.94. For more information and tickets write to: TARA, PO Box 1295, Huntington WV 25715.

BELLEVILLE MI
JUNE 6

The Southeastern Michigan Amateur Radio Hamfest will be held Sunday, June 6, 1976, from 6 am till 4 pm, at the Wayne County Fairgrounds, Belleville, Michigan. 20 minutes from Detroit, 10 minutes from Ann Arbor. I-94 at Belleville Road Exit. Featuring: indoor exhibits, swap and shop, trunk sales, food and refreshments, camping space adjacent to fairgrounds available at a nominal free, and hotel and motel reservations will be available. 5 major prizes. Tickets $2 advance, $2.50 at gate. For more information and tickets write to: Hamfest, Box 1976, Belleville MI 48111. Talk-in 37/97 rpt — 52 simplex. Sponsored by: A.R.R.O.W. Repeater Inc., WR8ADH.

OLD WESTBURY NY
JUNE 6

The Electronic Flea Market sponsored by L.I. Mobile Amateur Radio Club (LIMARC) will be held Sunday, June 6, 1976 from 9am to 4 pm (rain date: June 20) at the N.Y. Institute of Technology, Rte. 25A and Whitney Lane. Admission $1 per buyer; $2 per space seller. For additional information call W2KPQ (516) 938-5661. Talk-in on 25/85.

MANASSAS VA
JUNE 6

The Ole Virginia Hams A.R.C. is sponsoring its second annual Mid Atlantic area "Quality" Hamfest for Sunday, June 6, 1976, at the Prince William County Fairgrounds, Route 234, ½ mile south of Manassas, Va. Directions: take I-95 to Route 234 at Dumfries, Va., or I-66 to the Manassas exit, then south on Route 234. Talk-in on 146.37-97, 147.84-24 and 146-52 simplex. Featuring — large display and exhibit area, electronic flea market, and door prizes. For more information and advanced registrations write to: WA4GVX, 1708 Sharp Drive, Woodbridge VA 22191.

PISCATAWAY NJ
JUNE 6

The Tri-County Radio Association Inc., flea market will be held June 6, 1976 at Nick's Grove, 318 William Street, Piscataway NJ. Opens at 10 am, admission $1, tables $4, half tables $2. Door prizes. Talk-in 146.52, 147.855/147.255. For further information call (201) 725-0778 or (201) 752-4307 or write: PO Box 412, Scotch Plains NJ 07076.

PRINCETON IL
JUNE 6

The Starved Rock Radio Club Hamfest will be held June 6 at the Bureau County Fairgrounds, Princeton, Illinois, same place as last year. Free coffee and doughnuts from 10 to 10:30 am. Camping and trailer space on a first come first served basis for a nominal fee. Official dedication of Starved Rock Repeater by ARRL officials. Advance registration, $1.50 until May 20, after that/or at gate $2.00. For more complete information, motel list, maps, etc., furnish long SASE. For reply, write: Starved Rock Radio Club W9MKS, RFD #1, Box 171, Oglesby IL 61348. (815) 667-4614.

SIOUX FALLS SD
JUNE 12-13

The Sioux Falls Amateur Radio Club, Inc. and the Sioux Valley

Repeater Association, Inc. will hold the 1976 South Dakota Ham Picnic in Sioux Falls on June 12 and 13 at the Sioux Empire Fairgrounds on Sioux Falls' west side, ½ mile east of Interstate 29 and the 12th Street off ramp – follow the "OSY" signs. A talk-in will be on 3950 kHz by the S.F.A.R.C. Club station, WØZWY. Members of the S.V.R.A. will provide information and assistance on the WRØACK 16/76 repeater. For further information, please send an SASE to Sioux Falls Amateur Radio Club, PO Box 91, Sioux Falls SD 57101.

ATLANTA GA
JUNE 12-13

The ARRL Southeastern Division Convention and the Atlanta HamFestival 1976 will be held on June 12-13th at Dunfey's Royal Coach Motor Hotel, I-75 at Howell Mill Road, Atlanta GA. Special HamFestival rates of $16 single, $21 double are in effect. Individual registration is $3 in advance, $4 at door; family registration $5 in advance, $6 at door. Flea market spaces (outdoors) are $5 each, first come, first served. For more information and pre-registration forms, write: Atlanta HamFestival 1976, 53 Old Stone Mill Road, Marietta GA 30062 or telephone area (404) 971-HAMS day or night.

WILLOW SPRINGS IL
JUNE 13

The 19th Annual ABC Hamfest will be held Sunday, June 13, 1976 sponsored by the Six Meter Club of Chicago, Inc. Located southwest of Chicago at Santa Fe Park, 91st and Wolf Road, Willow Springs IL. Advance registration $1.50; at the gate $2.00. Large swap row, picnic grounds, AFMARS meeting, refreshments. Advance tickets from Don Marquardt K9SOA, PO Box 79, Lyons IL 60534 or any club member. Talk-in on 146.94 FM or WR9ABC 37-97 (PL2A).

GRANITE CITY IL
JUNE 13

The Egyptian Radio Club, Inc., W9AIU Hamfest will be held Sunday, June 13, 1976 at the club house located north of Granite City, Illinois, ¼ mile south of the Old Chain of Rocks Canal Bridge. Swapper Row, games for the kiddies, lunch served, cold drinks, ladies' white elephant sale and Bingo. Talk-in on AF9ACA 146.76. Admission free.

ARNOLD MD
JUNE 13

The Maryland Mobileers Amateur Radio Club will hold its Sixth Annual Hamfest on Sunday, June 13, 1976 at Anne Arundel Community College, Arnold, Maryland. Gates open at 9 am. Registration: $2. Tailgaters: $3 plus registration fee. Drawings to be held at 3 pm. First prize: $200 Savings Bond. Talk-ins on 146.10/.70 – 146.52 – 146.16/.76.

AKRON OH
JUNE 20

The Goodyear Amateur Radio Club WA8UXP of Akron, Ohio will hold their 9th Annual Fathers' Day (Hamfest Picnic), on June 20, 1976, at Wingfoot Lake Park located east of Akron, Ohio, one mile west of Suffield, Ohio, on County Rd. #87 and near County Rd. #43. Huge flea market, displays, swap and shop, prizes on the hour, picnic tables available. Adult and children's play area all day. Join us for an enjoyable day of entertainment. Hours: 10 am to 6 pm. Family admission $2 prepaid; $2.50 at gate. For details, tickets, map and program, write to Floyd T. Gilbert WB8ALK, 1976 Newdale Ave., Akron, Ohio 44320.

DUNSEITH ND
JULY 10-11

The 13th Annual International Hamfest is scheduled for July 10 and 11, 1976 at the International Peace Garden between Dunseith, North Dakota and Boissevain, Manitoba. Many prizes to be won. For more information write: Craig R. Schmidt WBØGFZ, Co-Chairman, 1976 Hamfest, Reed Hall #302, North Dakota State University, Fargo ND 58102.

TERRE HAUTE IN
JULY 18

Turkey Run Hamfest has MOVED! New location is the Vigo County Fairgrounds on Highway 41 just South of Terre Haute. There will be prizes galore, lots of flea market space under a roof, XYL Bingo, and plenty of overnight camping will be available. Presale tickets are available 4 for $5 or $1.75 ea. At the gate 3 for $5 or $2 ea. For further information or tickets write to Wabash Valley Amateur Radio Assn., P.O. Box 81, Terre Haute IN 47808.

CANTON OH
JULY 25

The Tusco Amateur Radio Club and the Canton Amateur Radio Clubs are holding their Second Hall of Fame Hamfest on July 25, 1976. It will be held at the Stark County Fairgrounds, Canton, Ohio. This weekend, by the way, is the weekend of the National Pro Football Hall of Fame Football Game and Parade.

MENA AR
SEPT 4-5

The Queen Wilhelmina Hamfest 1976 is Saturday and Sunday, September 4 and 5, at Queen Wilhelmina State Park, Rich Mountain, Mena, Arkansas. Excellent accommodations and food at the newly restored historic Queen Wilhelmina Castle. Door prizes hourly, grand prize, new equipment displays, flea market, camping area with utilities and rest rooms, amusements for harmonics. Talk-in 146.52. For more information write WB5CXX, P.O. Box 5191, Texarkana TX or phone (214) 838-0625.

be my guest

visiting views from around the world

from page 78

considered; therefore, at this level, inputs from them must also be solicited and carefully analyzed. Inputs from other nations and the technology being developed by them might not be bad to know, and an open invitation to a representative from Europe or another part of the world could go a long way in cementing relations between us. We might just learn a little from their work. Think I am kidding? Just look at the latest *73 World Atlas of Repeaters.* They're right in there with us.

It would be important to us to develop an ongoing and open dialogue with the Federal Communications Commission, and a representative of the Amateur and Citizens Division should be invited to attend every one of these meetings. With deregulation now a reality, it is very important for them to know that we are willing and able to be the self-directing service that we want to be and that we have developed the necessary structure to insure this. By inviting both their participation and comment at such meetings, we can help foster this deregulation trend, since they will then be getting regular feedback on how things are going (and getting this directly from those chosen by us to represent us). If you lived through the years of 18803 (you can see that repeaters and FM are my special interest) and never want to see a repeat of things such as this, then an ongoing dialogue on a national level between the Commission and the amateur community is essential.

Finally, it is important to let the Directors of the League know what our wants and desires are, so that they can be directed to work toward these goals. At the same time, they too might have ideas on the same subjects that they wish to put forth to us. For this reason, a direct dialogue between the ARRL Board of Directors and this top drawer committee must also exist. While some may not believe it, in the past few years there has been a marked shift within the League management toward listening to and acting upon the many diverse needs of the amateur community. However, they can only act if input is provided, and for that reason a direct liaison between the two is mandatory. It was seeing this change begin that gave rise to my decision to join the ARRL – and, hopefully, help foster its continuance.

So there you have it: a voluntary coordination plan that encompasses all interested amateurs, provides for the needs of all modes and all special interests, is totally elective in nature, and offers the possibilities of international ties. A pipe dream you say; maybe so, but with a little work and commitment on the part of each individual amateur, it or something similar can be a reality. I do not offer this as a solution to the problems that plague us now or that will plague us in the future, but rather as a starting point from which to build. Let's exchange ideas and come up with a plan that not only will benefit us now, but also will never become obsolete in the future.

This leaves us with two questions (perhaps many others, but these two seem key). Where did I get this idea? And, is it really all that necessary? The where is easy: It is nothing more than the ideas of many amateurs with whom I have spoken who are concerned about the future. All that I have done is take their views and my own and collate them into some viable form – some starting point from which to build. But is it necessary to do so? At this moment, the answer is yes and no, depending upon where you happen to live. If it's in an area with a limited number of amateurs and limited VHF activity, the answer is no. However, the majority of this operation is concentrated in large and crowded urban areas, and in some places we are beginning to step on one another's toes. This can only lead to dissension within our ranks, unless we do something now. If this is to be the case, we must be farsighted enough to give all involved some voice, and must be democratic about the way we handle such an effort. We must not appoint from outside but rather be left free to determine our own destiny through due democratic process. What you have just been presented is, I hope, a true "Representative Democratic Republic" with which to begin preparing for the future.

In closing, let me pose the following. For many a moon we hollered for deregulation so that we would be free to continue building toward a free and viable amateur radio community. The Commission has now started to grant our requests, so I only ask if we are prepared to meet and accept both the challenge and obligation that this puts before us. Individually we cannot do it alone, but collectively, on a voluntary basis, the future can be bright and fruitful.

Your comments, and ideas and recommendations are gratefully accepted.

Bill Pasternak WA6ITF
14725 Titus St. #4
Panorama City CA 91402

LETTERS

from page 113

interested in transistors? The stuff in BYTE is so far over my head that I don't really look on that as being helpful to most of us . . . and it certainly isn't ham oriented. Okay? Now stop fussing and start reading those articles . . . we've gone to a lot of trouble to get them into the magazine so you will know what is what with this new equipment . . . the most amazing component in the history of electronics. — Wayne.

RINGING A BELL

J. K. Bach's article in the March issue of *73* rang a bell. I hope this information will be useful to other ten dollar calculator buyers.

The "Accumatic" calculator I bought several years ago (for considerably more than ten dollars, unfortunately) was marketed by Lloyd's Electronics, Inc., 18601 S. Susana Road, Compton CA 90211. My calculator was exactly like the one Mr. Bach bought for ten bucks — it didn't work either. The problem was a shorted capacitor — C8 — which prevented the display from clearing. By replacing C8, I finally got rid of the 8s, and the display zeroed nicely. Since the instruction manual I received with the calculator was even more vague and incomplete than the one the author describes, I was content with an operating display and reasonably good battery life. The "Accumatic" performed fairly well, if slowly, for the next few months until I sold it and bought one of the fancier models with a memory and square root functions.

John C. Mutzabaugh WNØQEA
Grand Forks ND

P.S. By the way, I thoroughly enjoy *73* — if more hams had your attitude, the future of amateur radio would be a hell of a lot brighter.

RFI LEGISLATION

On 25 February 1976, The Honorable Barry Goldwater (Arizona) introduced radio-frequency interference (RFI) legislation into the U.S. Senate. The bill, S. 3033, is virtually identical to the RFI bill introduced into the House of Representatives last year by Mr. Charles A. Vanik.

Mr. Goldwater's bill has been referred to the Senate Commerce Committee, and so, interested readers should forward their comments on the bill to: The Honorable John O. Pastore, Chairman, Communications Subcommittee, Senate Commerce Committee, United States Senate, Washington, D.C. 20510.

Letters may also be sent to one's senators at the following address: The Honorable . . ., United States Senate, Washington, D.C. 20510.

Correspondence should indicate that a similar measure is awaiting hearings in the House of Representatives (H.R. 7052).

Theodore J. Cohen W4UMF
Secretary
RFI Task Group
Alexandria VA

MAPLE HILL

"This is W5LSF, Rockwall, Texas, near Dallas . . . we read you loud and clear . . . greetings to the Castleton Kiwanis!" This message filled the hall where the Castleton Kiwanis club met recently as students Jim Zalinka and Ann Ryan joined me in a demonstration of "ham" or amateur radio. Joining the Kiwanis at the invitation of Mr. Harry Hallenbeck, my students and I set up two portable stations using equipment and antennas made by Maple Hill High School's Amateur Radio Club. After explaining the workings of their school station and showing cards collected from stations "worked" all over the world, the students distributed free literature and gave a demonstration. Despite bad weather and band conditions, the station near Dallas was contacted as part of the demonstration on "DX" or distance communications. Another demonstration showed local FM communication, using repeaters.

As part of their training for radio licenses, a group of 5 Maple Hill students recently visited amateur radio operator Joseph Battaglia W82QEH of Schenectady, who's been on the air since 1918. Joe showed his equipment to students Geoff Schad, Bob Porter, Al Ferreira, Scott Van Nederynen and Jim Zalinka, who accompanied me on the visit. Joe was particularly proud to show how he restores old radio equipment and experiments with new antennas, both prized amateur radio skills.

Maple Hill High's radio station and program have recently been recognized by two national amateur radio magazines, *QST* and *CQ*.

John Kienzle WA2UON
Castleton NY

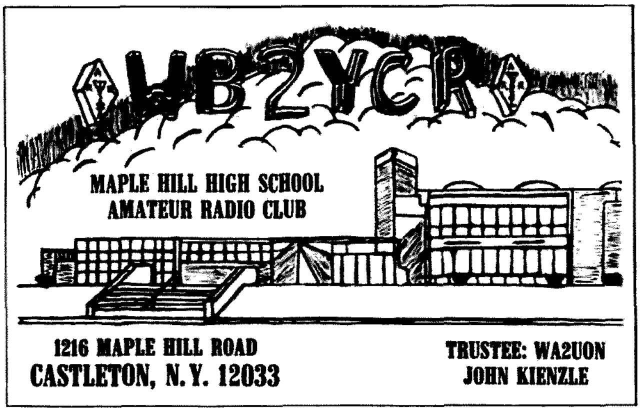

SAD PARAGRAPH

OK, here it is. Your sad paragraph in your editorial about the reader service card got to me. I have circled the appropriate alphanumerics and am writing this, my first letter ever to a magazine. It's just that I like *73* a lot and would like to make your advertisers happy. As you will note from the checked box, my copy was obtained at a newsstand (ham store). This is because of thiefs in my apartment house. It seems they like all the same mags that I do, so I am forced to buy at the store. Well, that's life.

Keep up the computer articles. I am about to buy an Altair 8800 and my knowledge of computers is about equal to yours, so I need all the info I can get. Thanks for a swell mag.

R. L. Turner K7MRB
Seattle WA

DOLLAR FOR DOLLAR

Your new format has certainly improved the appearance of *73 Magazine* and made for much easier reading with the larger print. Congrats!

I would like to hear from any of your readers who are ham operators and former members of the Lone Scouts of America.

August Karvonen K8HHZ
Mass MI 49948

Thought I would drop you a line and let you know that I really enjoy your new format for *73 Magazine*. Dollar for dollar it is still the best radio magazine around. Keep up the good work. I really enjoy reading your editorials, as they sometimes step on toes that need to be stepped on.

I operate CB here as well as ham radio, and I find most of the people here in this area very conscious of proper procedure and identification with the proper callsign as issued by the FCC. Not all of us CBers are bad. I have been a licensed ham for 16 years and have found a use for both ham radio and CB radio in my personal and professional life.

Billy L. Nielsen WB4APC
Radcliff KY

HBØ DXPEDITION

Please be advised that the Wiesbaden Amateur Radio Club is planning an HBØ Dxpedition. Dates are from 26 May 76 through 2 June 76. We will be using an HBØ call as a club call.

The bands worked will include the following: 80, 40, 20, 15, 10 and 2 meters. Frequencies to be used are not firm and we do plan to operate in the Novice portion of the bands.

QSL will be via the German DARC and DA1DM, or as given during QSO.

Dennis F. Miller WB5KEA/DA1DM
APO NY

THEY'LL BE THERE

Are you following us around? Last summer, just after we opened a CB shop, you came up with a ham who suggested us amateurs open CB shops. Now comes your April issue — asking about CB bootleggers on 10 and 15. Ron (W5SUH) and I (WN5PKE) also sell and service ham equipment. Sideband has proven fascinating for some of our CB customers, and since we keep ham equipment on display, they ask about it, also.

With this group, Ron has made it so interesting that they've started Novice classes. Last night we had 18 members in the class. Pretty good for a farming community of 2400, don't you agree? Some of these CBers drive 60 miles one way for this class.

The answer? Make it sound and *be* interesting — start explaining, and take time to convert them.

As I'm writing this, one of our students is reading your article. He says, "Tell them I agree — let's keep those of us who don't know anything off until we *do* know what we're supposed to know."

We've met with so much more interest from these more-intrigued CBers than we have from the general public. Can we hams look at the CBers as a "natural resource," waiting to be tapped?

Look for our students in the '77 callbook. They'll be there!

Carol Gamel WN5PKE
Checotah OK

NEW PRODUCTS

NEW WILSON 1405SM THOROUGHLY TESTED

Wilson has come up with a five Watt HT . . . shades of the old Motorola HT-220 for you old timers in FM. The Wilson has the enormous benefit of having a 1 W/5 W switch so you don't *have* to run the battery down at the high output rate.

Naturally I felt that it was important to put the Wilson through a really rigorous test. After a lot of thought, the decision was made to check it out under the worst possible conditions . . . while skiing at Aspen, Colorado. Here it would have to be subjected to temperature extremes, altitude extremes, long periods of use without recharging, plus plenty of physical abuse whenever I fell down on it.

Aspen would be a great two meter FM area if there was a repeater set up on a mountain across town. The four main ski areas are all in a row, running about ten miles from the center of town. The result is that when one is skiing on one side of a mountain at one end of the chain it is difficult to get through to someone skiing on the other side of a mountain on the other end of the chain. This is where the five Watts really turned the trick. Time after time I was able to shake up the troops several mountains away by blasting them with the high power position.

The unit sucks 900 mA in "high" so prudence calls for moderation and use of the 1 W level when the 5 W isn't actually needed. It only drags 400 mA in low.

A friend of mine once pointed out that "for a few cents extra you go first class." He was right, in general, and thusly I had the TT pad on my 1405SM. Now, I'll admit that there are not a lot of autopatch repeaters in Aspen . . . none, in fact. But that in no way stopped me from expansively pointing out to any non-ham who showed even slight interest that, oh yes, we could make telephone calls with the HT.

It's funny about an HT . . . you can go along for years not owning one and in some way get by. But once you have it you find that it is in constant use. Some chaps wear the damned things almost 24 hours a day, which to my mind is carrying hamming too far. Most of these chaps are single . . . or at least they are single now.

The 1405, being a bit smaller than the older Wilson HTs, fit even better into my ski parka pocket. I didn't take any spectacular flops on it, but I did manage to check out its survivability under impact a few times . . . like the time I came sailing into the middle of the bus stop area at the end of the day going at an impressive clip . . . I did a quick hockey stop in a casual and very masterful way . . . and caught the edge of my ski in a rut and went skidding on the HT over the ice for about six feet. Damned people didn't have anything better to do than stand around snickering. The HT worked fine.

I like the Wilson because it is easy to get into for changing crystals . . . it has six (6) channels, which is very handy if you are going to be around a few repeaters and also need a couple of direct channels. The batteries are very easy to access . . . this was particularly valuable for me because my charger got swiped from my hotel room within a couple hours of my arrival in Aspen, and I had to jury rig a charging setup with a couple clip leads into a Motorola charger. It kept me on the air. I did find that when I kept to the 1 W position I could use the HT for two or three days before the battery meter began to indicate a weakening condition. I left it on receive all day so I could hear any calls from the other four skiers.

A group of amateurs with HTs is a fun thing under almost any circumstances . . . and skiing is particularly great. Even though you are divided up and not skiing together, you are in constant touch.

Wayne Green W2NSD/1

VHF ENGINEERING ANNOUNCES TWO NEW POWER SUPPLIES

VHF Engineering, of Binghamton, N.Y., has announced two new high current, regulated 12 volt power supplies for use in amateur and commercial applications.

The two supplies have ratings of 15 Amps and 25 Amps, over voltage ranges of approximately 10-14 V dc and 10-14 V dc respectively. Load regulation is 2% from no load to maximum rated current.

These new supplies feature both over-voltage protection and foldback current limiting. The over-voltage protection is provided by a crowbar circuit which will shut down the supply if the output voltage exceeds 14 V. This feature protects the equipment being powered from damage due to over-voltage in the event of a malfunction within the supply. The foldback limiting circuit limits the output current to a maximum of 1 Amp in the event that the output is shorted. This feature protects the power supply from damage and prevents high currents from flowing into a piece of equipment which has developed an internal short. When the short is removed, the power supply returns to normal.

These regulated power supplies have been designed to high commercial standards through the use of epoxy glass, tinned circuit boards, along with high quality components. They may be purchased directly from VHF Engineering, 320 Water St., PO Box 1921, Binghamton NY 13902, or from distributors nationwide. The 15 Amp supply (PS-15C) sells for $79.95 in kit form and $94.95 wired and tested. The 25 Amp supply (PS-25C) sells for $129.95 as a kit and $149.95 wired and tested.

George R. Allen W1HCI

MORE ON THE TWO-TIMER

(April, 1976, p. 106)

Nexus Trading Company will provide a free information package with board layouts for the Two-Timer clock, upon receipt of an SASE. An etched and drilled board set is available for $8.95. Specify .3" or .6" readouts.

briefs

The WC calls you may begin to hear soon on the ham bands aren't Novices in the Caroline Islands or newly licensed hams; they are RACES calls. In the Report and Order on Docket 19723, the FCC rewrote the RACES rules to affirm that all such stations must be controlled by licensed amateurs. All amateur frequencies may be used by RACES stations, except in times of declared emergencies, and tactical callsigns will be abolished. RACES repeater operation will use the WC-R bloc of calls.

Club station applicants no longer have to supply a copy of the club constitution and bylaws, but the FCC has announced that a club must, to be licensed, have at least two members (one licensed), a name, constitution, and amateur radio as its primary purpose.

The trial program of using the Civil Service system to administer amateur examinations has ended; the commission has decided to retain that function except in outlying areas where a field office is very distant. The program did not receive as much interest as anticipated.

More deregulation: The word "intracommunity" has been struck from the FCC's definition of a repeater station, in keeping with the permissibility of multiple repeater links. "DX" repeaters are now not in keeping with the spirit of the rules.

Ten meter repeaters are now beginning to appear; WR1AAA in Malden MA had the first reported ten meter system, operational in February. Now if only there were sunspots . . .

License guide publishers were up in arms when the ARRL sent a letter to advertisers implying that their forthcoming Novice text would be recognized by the FCC as the only official text, and that passing a course administered by an ARRL club would be the primary route to a Novice license in the future. In fact, the FCC has not given the ARRL any special status, and is contemplating letting local clubs certify Novice class graduates, to lessen the test grading load at Gettysburg. Details remain to be worked out.

27 MHz CB expansion had been tentatively scheduled for announcement around April Fools' Day, but was put off for perhaps a year at the last minute. It seems that the proposed new channels were 455 kHz away from existing channels, and i-f frequency intermod would have caused interference to other services. New frequencies are still being sought somewhere in the spectrum.

The FCC has waived the rules to permit ATV repeaters to operate in the 420 MHz band outside of normal repeater allocations, for a one year period ending next March. WR4AAG near Washington DC had been operating with 439 MHz input, 427 MHz output for some time with temporary authorization; future ATV repeaters will probably be covered by a coordination plan that has yet to be worked out.

The HIRAN docket to permit offshore nongovernmental radiolocation services to share the 450 MHz ham band has been acted upon; such services will be permitted on a case-by-case basis. Amateurs had expressed dissatisfaction with the idea, but few complaints of interference arose from previously authorized stations. Amateurs are expected to scream like mad if they receive interference, as they have priority there.

FCC

Before the
Federal Communications Commission
Washington, D.C. 20554

FCC 76-130
39213

In the Matter of

Deregulation of Subpart F, Radio Amateur Civil Emergency Service (RACES), in Part 97

Docket No. 19723

RM-968, RM-1116, RM-1478, RM-2032, RM-2154, RM-2168

REPORT AND ORDER
(PROCEEDING TERMINATED)
Adopted: February 11, 1976;
Released: February 19, 1976

By the Commission: Commissioner Reid concurring and issuing a statement in which Chairman Wiley and Commissioner Hooks join.

1. On April 18, 1973 the Commission adopted a Notice of Inquiry in Docket 19723, FCC 73-40, which was published in the Federal Register on April 27, 1973, 38 F.R. 10467 (1973). In adopting the Notice of Inquiry the Commission sought comments on several matters fundamental to the future structure and organization of the Radio Amateur Civil Emergency Service (RACES). We particularly wished to receive from informed parties comments concerning the effectiveness of the present RACES program, the type of RACES program, if any, that should be continued, the objectives RACES should attempt to achieve, and the way in which RACES should be structured to achieve those objectives.

2. The Commission received some one hundred thirty comments in response to its Notice of Inquiry, and on June 12, 1974 we adopted a Notice of Proposed Rulemaking in this proceeding, FCC 74-609, which was published in the Federal Register on June 24, 1974, 39 F.R. 22282 (1974). Comments were invited from interested parties and were due on or before September 25, 1974. Reply comments were due on or before October 10, 1974.

3. In our Notice of Proposed Rulemaking we proposed to simplify greatly those sections of Part 97 concerning RACES by:

(a) Making all licensed amateur radio operators and stations eligible for participation in RACES, provided such operators and stations are registered with and enrolled in a civil defense organization;

(b) Discontinuing present requirements for RACES Communications Plans, FCC Certifications and Authorizations (FCC Forms 481 and 482);

(c) Permitting RACES station licenses to be issued directly to civil defense organizations;

(d) Providing, except during emergencies, for the shared use of amateur frequencies between amateur and RACES stations on a first-come-first-served basis;

(e) Requiring control operators of RACES stations to be licensed amateur radio operators and making operator privileges in RACES identical to those held in the Amateur Radio Service;

(f) Limiting useage of RACES stations to bona fide civil defense emergencies and up to one hour per week of drills and tests;

(g) Abolishing tactical or secret call signs, currently authorized by Section 97.213 of the Rules, assigning the same distinctive two letter call sign prefix to all RACES stations to facilitate their identification as RACES stations, and requiring all other amateur stations participating in RACES to use their regular assigned call signs when participating in RACES/civil defense activities;

(h) Limiting permissible communications of RACES stations and amateur stations operating in RACES to communications with RACES stations, amateur stations participating in RACES, and those other stations listed in proposed Section 97.189.

4. We received comments representing the views of approximately one hundred fifty individuals and organizations in response to our Notice of Proposed Rulemaking in this proceeding. Our respondents included the Secretary of Defense, fifteen state civil defense agencies, forty municipal or county civil defense organizations, and sixteen amateur clubs and organizations, among them the American Radio Relay League (ARRL). All comments received have been carefully analyzed by the Commission's staff, and we are now prepared to undertake final action in this Docket.

5. Comments on the broad contours of our proposal ranged from several expressing the opinion that RACES has become little more than an extension of local government used by elected officials when normal radio frequencies are busy, and which should therefore be removed from the amateur service entirely, to others viewing strict local government control of RACES to be absolutely essential and requesting more, rather than less, Commission regulation of RACES.

6. Comments received on the proposed amendments were generally favorable. Typical was the response of the Secretary of Defense, who characterized the proposal as an "admirable step towards simplifying the unduly complex RACES licensing procedures." Similarly, the ARRL agreed "in principle with the modifications to the RACES rules proposed by the Commission . . ."

7. While several comments cited the absence of either RACES organization or activity in the respondents' areas as evidence justifying total elimination of RACES everywhere, others indicated RACES to be precisely the sort of highly organized and effective means of emergency communications so vital in times of man-made and natural disasters.

8. Accordingly, we reaffirm those findings outlined in our Notice of Proposed Rulemaking in this proceeding, namely, that there does exist today a definite need in some areas for the type of service RACES is intended to provide, and that such a communications network should at least be available to those communities desiring it. In this Report and Order, therefore, we are adopting the amendments contained in our Notice of Proposed Rulemaking essentially as proposed and as set forth in the Appendix hereto.

9. Although we are adopting the amendments to Part 97 generally as proposed, several questions concerning specific sections of the Docket merit separate discussion.

10. That section of the proposed amendments making all licensed amateur radio operators, regardless of license class, eligible for participation in RACES was almost universally accepted. Recent trends, such as the burgeoning number of repeaters available for amateur use, have amply demonstrated the utility of the VHF bands in providing dependable communications. A large segment of the VHF user population consists of Technician Class licensees, and since these licensees have proven themselves in the past to be highly qualified communicators, we perceive no reason for denying such a resource to those RACES organizations desiring to utilize it.

11. Our proposal to eliminate present requirements for RACES Communications Plans, FCC Certifications and Authorizations (FCC Forms 481 and 482) met with general approval, and we believe such deletion to be consonant with recent Commission attempts to simplify and deregulate the Amateur Radio Service. Thus, filing of FCC Forms 481 and 482 will no longer be required to obtain RACES authorization. We appreciate the position of those governmental entities such as the State of California expressing both concern over elimination of these requirements and fear that lack of provision for formal communications plans and frequency coordination will create confusion and limit the usefulness of RACES. We believe, on the contrary, that because RACES is at its base an amateur service, a service traditionally characterized by voluntary cooperation between groups and individuals, such apprehension is not warranted. Those civil defense organizations wishing to do so may of course establish communications plans and coordinate frequencies as extensively as they wish. In the future, however, such planning will be a matter for civil defense authorities and amateurs, not the Commission.

12. The proposals permitting RACES station licenses to be issued directly to civil defense organizations and providing for the shared use of all amateur frequencies between amateur and RACES stations on a first-come-first-served basis encountered relatively little opposition. Those respondents critical of the proposed amendments contended, in substance, that to permit use of amateur frequencies by amateurs and RACES groups would make effective civil defense emergency frequency planning difficult. The primary fear appears to be that unless specific frequencies are assigned for exclusive RACES use, interference from amateurs may be sufficient to render RACES communications impossible. We note, however, that the Commission may in the future, as now, designate frequencies for RACES use in the event of emergency under the provisions of Section 97.107 of the Rules, and would observe, further, that amateurs have a long tradition of voluntary cooperation in emergency situations, a tradition we have every reason to believe will continue in the future. We conclude, therefore, that their exists no real basis for concern in this regard.

13. Our proposal to require control operators of RACES stations to be licensed amateurs proved to be somewhat controversial. Many respondents, particularly those representing governmental and RACES organizations, expressed the belief that in requiring RACES operators to be in all cases licensed amateurs we would be severely limiting RACES' usefulness. A commonly articulated concern was that in many areas of the country, especially rural areas, there are few amateur licensees, and that for RACES to be a functional service it may in some instances be essential for local RACES officers to recruit as RACES operators personnel holding Commission commercial licenses, a practice currently authorized by Section 97.203 of the Rules. Several of our respondents also attempted to justify operation by commercial licensees on amateur frequencies by noting that some RACES stations are manned twenty-four hours per day and that volunteer amateurs may be unwilling to serve on an around the clock basis. Further, a few comments stated that because many disasters strike with great swiftness, effective use of RACES stations virtually dictates use of commercial operators, at least until amateur operators are available to man the stations. As outlined by the Secretary of Defense, commercial licensees are necessary in such situations to "provide the official direction and supervision needed in the case of an emergency . . . [to] fill the interstices caused by the inability of amateurs to provide sufficient communications support in a given area." Assuming, without deciding, these arguments to be valid, we nonetheless believe

they ignore the fundamental principle inherent in RACES, namely, that it is an amateur service. The proposition that there can be any circumstances whatsoever in which commercial operators may operate on amateur frequencies is contrary to the definition of the service found in Section 97.3 of the Rules and is conceptually unacceptable. We believe that if RACES cannot function without commercial operators, it should probably be removed from Amateur Radio Service frequencies entirely.

14. Much of what was said in the preceding paragraph applies with equal force to the problem of the scope of operating privileges to be extended amateur operators participating in RACES. Consistent with our desire to make RACES an integral part of the amateur service, we are herein adopting Section 97.179 as proposed and making operator privileges in RACES identical to those held in the amateur service. While we anticipate that some RACES organizations will be inconvenienced in ensuring their operators utilize only those frequencies available under the terms of their licenses, we believe any such inconvenience will be far outweighed by the benefits to be realized in making RACES an integral part of the Amateur Radio Service.

15. Much concern was also expressed over limiting useage of stations participating in RACES to bona fide civil defense emergencies and a maximum of one hour per week of drills and tests, as proposed in Section 97.191. Such a limitation on drills, some contended, is unrealistic because it often takes longer than one hour simply to call the roll and attend to other administrative matters on a RACES network. We are not persuaded by such arguments. While some of the larger RACES networks may be forced to adopt more efficient methods of operation to comply with the new time limitation, we believe most RACES operations will not be seriously affected. Those amateurs wishing to sharpen their network traffic handling skills beyond that they are able to acquire as RACES participants may of course do so through those amateur networks organized for this purpose.

16. Our proposal to eliminate tactical call signs, assign distinctive call signs to RACES stations, and require amateur stations participating in RACES to use their amateur call signs was criticized by several of the larger civil defense organizations. These respondents stated, in substance, that such a change in standard RACES operating procedure would engender confusion, cause unnecessary delay, and make network operation generally less efficient. We believe, however, that operation on amateur frequencies should whenever possible conform to accepted amateur practice, and that by requiring the use of amateur call signs on RACES networks we are taking an appropriate step in that direction. New RACES stations or those renewing their licenses after the effective date of these amendments will be assigned call signs with a prefix of "WC" followed by the appropriate amateur call sign district indicator and three letters. RACES repeater stations will be assigned call sign suffixes beginning with "R".

17. Several comments alleged that limiting permissible communications of RACES stations and amateur stations participating in RACES to communications with RACES stations and those other stations listed in proposed Section 97.189 would reduce RACES network effectiveness in time of emergency. A few respondents suggested that non-RACES amateurs may be in positions to render valuable assistance to RACES operations in emergency situations, and that, in any event, in light of the proposed amendment discussed in the preceding paragraph, requiring amateur stations participating in RACES to use their amateur call signs, such a prohibition would be unenforceable. While conceding the obvious difficulties involved in enforcing Section 97.189 as proposed, we note the long self-policing history of the Amateur Service and conclude that enforcement will not constitute a serious problem. At the root of proposed Section 97.189 is the notion that RACES is a discrete system within the Amateur Service, designed to provide specific types of communications in narrowly defined situations. We believe, therefore, that only these stations registered in RACES should be permitted to communicate with RACES stations, and *vice versa*. We would observe, however, that there is nothing to prevent amateur stations registered in RACES from taking part in other organized and unorganized amateur activities and communicating with non-RACES amateur stations in those contexts.

18. Some comments raised questions concerning the definition of "RACES station" in proposed Section 97.163(b). They asked whether the language "specific land location" meant such a station could be operated as a portable station. The answer is "yes": a RACES station may be operated portable in the same fashion as any other amateur station. We merely require that the licensed station location be a "specific land location."

19. Finally, we would note that because all amateur frequencies are now available for RACES use, repeater stations operating in RACES may now make full use of those frequencies allocated for repeater useage in the Amateur Service. The limitations of proposed Section 97.185 apply only in those emergencies requiring invocation of the President's War Emergency Powers under Section 606 of the Communications Act of 1934, as amended.

20. In view of the foregoing, we believe these amendments of Part 97 of the Rules to be in the public interest, convenience, and necessity.

21. Authority for the rule changes adopted herein is contained in Sections 4(i) and 303 of the Communications Act of 1934, as amended.

22. These amendments shall become effective upon the date specified in paragraph 23. In order to avoid undue hardship, existing RACES stations may continue to operate under their current authorizations and the existing Rules until the expiration date of their licenses. If the expiration date of an existing RACES station license is less than one year and six months from the effective date of these amendments, it may be renewed upon proper application for a period of one year, during which time the existing rules shall continue to apply. All other new and renewed RACES licensees shall comply with the rules as amended. Each new RACES station application shall be submitted on an FCC Form 610-B, with an indication it is a RACES station application.

23. Accordingly, IT IS ORDERED that Part 97 of the Commission's Rules IS AMENDED as shown in the Appendix attached hereto effective March 23, 1976. IT IS FURTHER ORDERED that this proceeding is TERMINATED.

FEDERAL COMMUNICATIONS COMMISSION*
Vincent J. Mullins
Secretary

*See attached Concurring Statement of Commissioner Reid in which Chairman Wiley and Commissioner Hooks join.

NOTE: Rules changes herein will be covered by T.S. VI(75)-3.

APPENDIX

Part 97 of Chapter 1 of Title 47 of the Code of Federal Regulations is amended in its entirety as follows:

SUBPART F – RADIO AMATEUR CIVIL EMERGENCY SERVICE (RACES)

General

§97.161 Basis and purpose.

The Radio Amateur Civil Emergency Service provides for amateur radio operation for civil defense communications purposes only, during periods of local, regional or national civil emergencies, including any emergency which may necessitate invoking of the President's War Emergency Powers under the provisions of §606 of the Communications Act of 1934, as amended.

§97.163 Definitions.

For the purposes of this Subpart, the following definitions are applicable:

(a) *Radio Amateur Civil Emergency Service.* A radiocommunication service conducted by volunteer licensed amateur radio operators, for providing emergency radiocommunications to local, regional, or state civil defense organizations.

(b) *RACES station.* An amateur radio station licensed to a civil defense organization, at a specific land location, for the purpose of providing the facilities for amateur radio operators to conduct amateur radiocommunications in the Radio Amateur Civil Emergency Service.

§97.165 Applicability of rules.

In all cases not specifically covered by the provisions contained in this Subpart, amateur radio stations and RACES stations shall be governed by the provisions of the rules governing amateur radio stations and operators (Subparts A through E of this part).

Station Authorizations

§97.169 Station license required.

No transmitting station shall be operated in the Radio Amateur Civil Emergency Service unless:

(a) The station is licensed as a RACES station by the Federal Communications Commission, or

(b) The station is an amateur radio station licensed by the Federal Communications Commission, and is certified by the responsible civil defense organization as registered with that organization.

§97.171 Eligibility for RACES station license.

A RACES station will only be licensed to a local, regional, or state civil defense organization.

§97.173 Application for RACES station license.

(a) Each application for a RACES station license shall be made on the FCC Form 610-B.

(b) The application shall be signed by the civil defense official responsible for the coordination of all civil defense activities in the area concerned.

(c) The application shall be countersigned by the responsible official for the governmental entity served by the civil defense organization.

(d) If the application is for a RACES station to be in any special manner covered by §97.41, those showings specified for non-RACES stations shall also be submitted.

§97.175 Amateur radio station registration in civil defense organization.

No amateur radio station shall be operated in the Radio Amateur Civil Emergency Service unless it is certified as registered in a civil defense organization by that organization.

Operating requirements

§97.177 Operator requirements.

No person shall be the control operator of a RACES station, or shall be the control operator of an amateur radio station conducting communications in the Radio Amateur Civil Emergency Service unless that person holds a valid amateur radio operator

license and is certified as enrolled in a civil defense organization by that organization.

§97.179 Operator privileges.

Operator privileges in the Radio Amateur Civil Emergency Service are dependent upon, and identical to, those for the class of operator license held in the Amateur Radio Service.

§97.181 Availability of RACES station license and operator licenses.

(a) The original license of each RACES station, or a photocopy thereof, shall be attached to each transmitter of such station, and at each control point of such station. Whenever a photocopy of the RACES station license is utilized in compliance with this requirement, the original station license shall be available for inspection by any authorized Government official at all times while the station is being operated and at other times upon request made by an authorized representative of the Commission, except when such license had been filed with application for modification or renewal thereof, or has been mutilated, lost, or destroyed, and request has been made for a duplicate license in accordance with §97.57.

(b) In addition to the operator license availability requirements of §97.83, a photocopy of the control operator's amateur radio operator license shall be posted at a conspicuous place at the control point for the RACES station.

Technical requirements

§97.185 Frequencies available.

(a) All of the authorized frequencies and emissions allocated to the Amateur Radio Service are also available to the Radio Amateur Civil Emergency Service on a shared basis.

(b) In the event of any emergency which necessitates the invoking of the President's War Emergency Powers under the provisions of §606 of the Communications Act of 1934, as amended, unless modified or otherwise directed, RACES stations and amateur radio stations participating in RACES will be limited in operation to the following:

Frequency or Frequency Bands	Limitations
kHz	
1800-1825	1
1975-2000	1
3515-3550	2, 4
3984-4000	
3997	3
7097-7103	4
7103-7125	2, 4
7245-7255	2, 4
14047-14053	4
14220-14230	2, 4
21047-21053	4
MHz	
28.55-28.75	
29.45-29.65	
50.35-50.75	
53.30	3
53.35-53.75	
145.17-145.71	
146.79-147.33	
220-225	5

(c) Limitations:

(1) Use of frequencies in the band 1800-2000 kHz is subject to the priority of the Loran system of radionavigation in this band and to the geographical, frequency, emission, and power limitations contained in §97.61 of the rules governing amateur radio stations and operators (Subparts A through E of this part).

(2) The availability of the frequency bands 3515-3550 kHz, 7103-7125 kHz, 7245-7247 kHz, 7253-7255 kHz, 14220-14222 kHz, and 14228-14230 kHz for use during periods of actual civil defense emergency is limited to the initial 30 days of such emergency, unless otherwise ordered by the Commission.

(3) For use in emergency areas when required to make initial contact with military units; also, for communications with military stations on matters requiring coordination.

(4) For use by all authorized stations only in the continental United States, except that the bands 7245-7255 kHz and 14220-14230 kHz are also available in Alaska, Hawaii, Puerto Rico, and the Virgin Islands.

(5) Those stations operating in the band 220-225 MHz shall not cause harmful interference to the government radiolocation service.

§97.189 Points of communications.

(a) RACES stations may only be used to communicate with:

(1) Other RACES stations;

(2) Amateur radio stations certified as being registered with a civil defense organization, by that organization;

(3) Stations in the Disaster Communications Service;

(4) Stations of the United States Government authorized by the responsible agency to exchange communications with RACES stations;

(5) Any other station in any other service regulated by the Federal Communications Commission, whenever such station is authorized by the Commission to exchange communications with stations in the Radio Amateur Civil Emergency Service.

(b) Amateur radio stations registered with a civil defense organization may only be used to communicate with:

(1) RACES stations licensed to the civil defense organization with which the amateur radio station is registered;

(2) Any of the following stations upon authorization of the responsible civil defense official for the organization in which the amateur radio station is registered:

(i) Any RACES station licensed to other civil defense organizations;

(ii) Amateur radio stations registered with the same or another civil defense organization;

(iii) Stations in the Disaster Communications Service;

(iv) Stations of the United States Government authorized by the responsible agency to exchange communications with RACES stations;

(v) Any other station in any other service regulated by the Federal Communications Commission, whenever such station is authorized by the Commission to exchange communications with stations in the Radio Amateur Civil Emergency Service.

§97.191 Permissible communications.

All communications in the Radio Amateur Civil Emergency Service must be specifically authorized by the civil defense organization for the area served. Stations in this service may transmit only civil defense communications of the following types:

(a) Communications concerning impending or actual conditions jeopardizing the public safety, or affecting the national defense or security during periods of local, regional, or national civil emergencies:

(1) Communications directly concerning the immediate safety of life or individuals, the immediate protection of property, maintenance of law and order, alleviation of human suffering and need, and the combating of armed attack or sabotage;

(2) Communications directly concerning the accumulation and dissemination of public information or instructions to the civilian population essential to the activities of the civil defense organization or other authorized governmental or relief agencies.

(b) Communications for training drills and tests necessary to ensure the establishment and maintenance of orderly and efficient operation of the Radio Amateur Civil Emergency Service as ordered by the responsible civil defense organization served. Such tests and drills may not exceed a total time of one hour per week.

(c) Brief one way transmissions for the testing and adjustment of equipment.

§97.193 Limitations on the use of RACES stations.

(a) No station in the Radio Amateur Civil Emergency Service shall be used to transmit or to receive messages for hire, nor for communications for material compensation, direct or indirect, paid or promised.

(b) All messages which are transmitted in connection with drills or tests shall be clearly identified as such by use of the words "drill" or "test", as appropriate, in the body of the messages.

CONCURRING STATEMENT OF COMMISSIONER CHARLOTTE T. REID (CHAIRMAN RICHARD E. WILEY AND COMMISSIONER BENJAMIN L. HOOKS JOIN) RE: RACES

I have concurred with my colleagues in this decision because I believe RACES remains a viable means of communications. RACES can and has filled a communications void in times of emergencies and I feel it should be administered and operated primarily by licensed amateurs. However, I do feel there will be bona fide emergencies where licensed amateurs may not be available and, in such cases, commercial operators should be allowed to operate the RACES stations until the licensed amateurs arrive on the scene. I would have preferred an exception to the licensed amateur operator rule with a restriction that such use could be only in time of an extreme emergency, not routine police, fire or ambulance activity.

PUBLIC NOTICE
WAIVER TO PERMIT AMATEUR TV REPEATERS

March 1, 1976-S

The Commission, by Chief, Safety and Special Radio Services Bureau, has waived Section 97.61(c) of the Commission's Rules for a period of 1 year to permit operation of fast-scan amateur television repeater stations outside of the sub-bands normally reserved for repeater operations in the 450 MHz amateur band.

On January 25, 1974, the Commission issued a six month Special Temporary Authorization which waived Section 97.61(c) of the Rules governing the Amateur Radio Service to permit operation of fast-scan television repeater station WR4AAG in the 450 MHz band. The station is used to retransmit television signals of other amateur television stations throughout the Washington, D.C., area, for the purpose of gathering experimental data concerning the feasibility of fast-scan television repeater operations at 450 MHz. The Special Temporary Authority waiving Section 97.61(c) was renewed several times subsequent to its issuance, with the most recent renewal set to expire on March 3, 1976. A petition for rulemaking to allow regular operation of this station, RM-2507, was filed on January 16, 1975. The Commission now has that petition under consideration, as well as several other requests of a similar nature. Pending formal consideration of these petitions, and pending implementation of a formal frequency coordinating mechanism within the Amateur Radio Service which would oversee the frequency selections of all repeater stations, the Commission is waiving Rule Section 97.61(c) for a period of 1 year to permit continued experimentation in this mode of operation. Any licensed amateur repeater station operating in the 450 MHz band may conduct such tests without prior Commission approval. This waiver is effective February 27, 1976. Authority for this waiver is contained in Section 0.331 of the Commission's Rules.

73 READER SERVICE

Circle appropriate Reader Service # for desired company brochures, data sheets or catalogs and mail in to 73. Include your zip code, please. Send money directly to advertisers. *LIMIT: 25 requests.*

ADVERTISER INDEX

☐ *NEWSSTAND* ☐ *SUBSCRIPTION*

READER SERVICE

73 Inc., Peterborough NH 03458

JUNE 1976

Please print or type.

Name ______________________ Call ________

Address ______________________________

City ________________________________

State ______________________ Zip ________

Coupon expires in 60 days . . .

propagation

by
J. H. Nelson

EASTERN UNITED STATES TO:

GMT:	00	02	04	06	08	10	12	14	16	18	20	22
ALASKA	14	14	7	7	7	7	7	7	7	7	7	7A
ARGENTINA	14	14	14	7	7	7	14	14	14	14	14A	14
AUSTRALIA	14	14	7	7B	7	7	7	7	7	7	14	14
CANAL ZONE	14	14	7A	7	7	7	7	14	14	14	14	14
ENGLAND	7	7	7	7	7	7	14	14	14	14	14	14
HAWAII	14	14	7A	7B	7	7	7	7	7A	14	14	14
INDIA	7	7B	7B	7B	7B	7B	14	14	14	14	7A	7
JAPAN	14	14	7	7	7	7	7	7	7	7	7	14
MEXICO	14	14	7	7	7	7	7	7A	14	14	14	14
PHILIPPINES	14	7B	7B	7B	7B	7B	7B	7	7	7	7A	14
PUERTO RICO	14	7	7	7	7	7	7	7	14	14	14	14
SOUTH AFRICA	7B	3B	3B	7	7B	14	14	14	14	14	7	7
U. S. S. R.	7	7	7	7	7	7	7	7A	14	14	14	7A
WEST COAST	14	14	7	7	7	7	7	7	14	14	14	14

CENTRAL UNITED STATES TO:

GMT:	00	02	04	06	08	10	12	14	16	18	20	22
ALASKA	14	14	14	7	7	7	7	7	7	7	7	14
ARGENTINA	14	14	14	7	7	7	7A	14	14	14	14	14
AUSTRALIA	14	14	14	7B	7	7	7	7	7	7	14	14
CANAL ZONE	14	14	7A	7	7	7	7	7A	14	14	14	14
ENGLAND	7A	7	7	7	7	7	7	7	7	7A	14	14
HAWAII	14	14	14	7B	7	7	7	7	7A	14	14	14
INDIA	14	7B	7B	7B	7B	7B	7B	7	14	14	14	14
JAPAN	14	14	14	7	7	7	7	7	7	7	7	14
MEXICO	14	14	7	7	7	7	7	7	7	7	14	14
PHILIPPINES	14	14	14	7B	7B	7B	7	7	7	7	7A	14
PUERTO RICO	14	14	14	7	7	7	7	14	14	14	14	14
SOUTH AFRICA	7B	3B	3B	7	7B	7B	7B	7A	14	14	7	7
U. S. S. R.	7	7	7	7	7	7	7	7	7A	7A	7	7

WESTERN UNITED STATES TO:

GMT:	00	02	04	06	08	10	12	14	16	18	20	22
ALASKA	7A	14	14	7A	7	7	7	7	7	7	7	7
ARGENTINA	14	14	14	7	7	7	7	7A	14	14	14	14
AUSTRALIA	14A	14	14	14	7A	7	7	7	7	7	14	14
CANAL ZONE	14	14	7	7	7	7	7	7A	14	14	14	14
ENGLAND	7A	7	7	7	7	7	7	7	7	7	7A	14
HAWAII	14	14A	14	14	7A	7	7	7	7A	14	14	14
INDIA	14	14	14	7B	7B	7B	7B	7	7	7	7	14
JAPAN	14	14	14	14	14	7	7	7	7	14	14	14
MEXICO	14	14	7	7	7	7	7	7	7	14	14	14
PHILIPPINES	14	14	14	14	7B	7B	7	7	7	14	14	14
PUERTO RICO	14	14	7A	7	7	7	7	14	14	14	14	14
SOUTH AFRICA	7B	3B	3B	7	7B	7B	7B	7B	7A	14	7A	7
U S S R	7	7	7	7	7	7	7	7	7A	7A	7	7
EAST COAST	14	14	7	7	7	7	7	7	14	14	14	14

A = Next higher frequency also may be useful
B = Difficult circuit this period
N = Normal
U = Unsettled
D = Disturbed
DX = Sporadic VHF DX

1976			JUNE			1976
SUN	MON	TUE	WED	THU	FRI	SAT
		1 U	2 D	3 U	4 D	5 U
6 U	7 N	8 N	9 N	10 U	11 U	12 U
13 U	14 N	15 N	16 N	17 N	18 D/DX	19 U/DX
20 N/DX	21 N/DX	22 U/DX	23 U/DX	24 D/DX	25 U/DX	26 U/DX
27 D/DX	28 D/DX	29 U/DX	30 U/DX			

73

AMATEUR RADIO

JULY 1976
$1.50

BUY CENTENNIAL
$17.76
for three years
LAST CHANCE
SUBSCRIPTION OFFER

HEY CBers...

HAMS work the WORLD!
Read about the FUN of hamming in 73.

I/O COMPUTER SECTION

Perfect CW — QRP — Counter — FAX — Repeatermeister — Nixie Clock — SSTV — Timer — Marine Radio — TV Typewriter Project — Computer Morse — Power Supply Testing — and MUCH, MUCH MORE!

73

#189 JULY 1976

COVER: Oils on masonite, by Jerry W. Geiger, Delafield WI.

73 Magazine is published monthly by 73, Inc., Peterborough NH 03458. Subscription rates are a ridiculously low $10 for one year worldwide, $17 for two years, and $17.76 for three years. Second class postage paid at Peterborough NH 03458 and at additional mailing offices. Phone: 603-924-3873. Microfilm edition — University Microfilms, Ann Arbor MI 48106. Tapes — Science for the Blind, 332 Rock Hill Rd, Bala Cynwyd PA 19904.

INCLUDE OLD ADDRESS AND ZIP CODE WITH ADDRESS CHANGE NOTIFICATION.

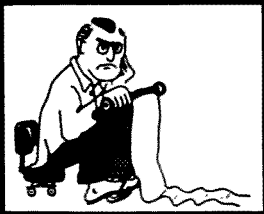

NEVER SAY DIE

...de W2NSD/1

EDITORIAL BY WAYNE GREEN

THE GOOD THE BAD THE UGLY

What with the Fourth of July, the bicentennial and other red, white and blue stimuli, I'm given to paying some attention to the number of bicentennial callsigns I'm not hearing on the bands. Tsk.

Yes, I know all about the bad aspects of our country . . . the incredibly awful conditions, seemingly without solution, in parts of New York City . . . the IRS . . . the prison system (if the word "system" is adequate) . . . the inability of our schools to teach . . . there are many outrages and frustrations and, unless you have a way to put things into perspective, they can bring you down. Our news media are certainly no help, with their dwelling on death and destruction to cater to our morbid fascination with these things.

For all the problems we have in this country, where else would you rather live? If you are very much traveled you have reached the same conclusion I have . . . for all its problems, the U.S. is by far the best. I think I liked it a bit better when I was young and when we had only about half as many people . . . and cities were about one fourth their present size . . . and hot dogs were a nickel. The dreams of youth.

But a country is not its geography – it is its *people* and we have *great* people. Yes, I know, we have some rotten people, too . . . I moved to New Hampshire from New York City, didn't I? We have a sprinkling of sour people around us . . . even on our ham bands . . . but we try to avoid them as much as we can. The general impression you get in listening to the amateur bands is one of friendliness and good cheer . . . heck, we even hear that attitude on CB these days, just to show how things can change.

My message is this: Resist the outrages and back the good things. Use your bicentennial callsign proudly . . . we have a great country and we can make it a lot better if we join those working towards improving it and resist those trying to tear it down.

When you see the courts refusing to acknowledge the Constitution, raise hell. When Ma Bell grinds some poor bastard into the dust just because he can't afford to fight . . . raise hell. We can cure many of the outrages we now accept with a shrug . . . and thank heavens they happened to someone else and not us . . . if we stop looking around for someone else to stand up and say NO! If something needs stopping, get busy and see what you can do about it . . . get some friends to help . . . write letters to the newspapers, television stations . . . picket . . . arrange a media event . . . write your congressman . . . raise hell and put a brick under it. Be a troublemaker and be damned proud of it.

Our country was not started by sheep . . . those men were troublemakers . . . and look what they've done! Note that they were constructive troublemakers, not fanatics . . . we don't have to tear things down to make them better – we have to build and improve them. Bombing Ma Bell won't make for better or cheaper service . . . letters to Congress about Bell outrages will . . . etc.

A lot of people put me down because I speak out . . . I'm called a radical . . . but I often wonder how far to the right people must be who see me as radical! I'm accused of tilting at windmills . . . and I smile at that because it does prove that I am at least trying to get something positive done while my critics are doing nothing but being destructive.

When people get power they have a strong tendency to abuse that power . . . and that holds for big business, for government officials and for labor leaders. I feel that the strength of our country lies in our ability to fight against powerful people bent on doing bad things. The most serious weakness we have is the ability of many (if not most) people to put up with these bad things and not raise hell about them.

The number of bad things happening is almost overwhelming at times. It would be most discouraging if we could not compare our situation with other countries . . . where we find that most have it a lot worse. Since our news media tend to stress disasters, we are not much in the habit of thinking in terms of the good things which are going on . . . pity, for though these things are not "news," they more than overshadow the miseries.

In amateur radio we have some bad guys and a whole lot of good guys. The good guys are organizing and running traffic nets, eyebank nets, emergency nets, DXpeditions, repeaters, clubs which are teaching new hams our hobby, hamfests . . . and they are experimenting with new techniques of RTTY, slow scan television, moonbounce, Oscar operating, computers, new antennas . . . etc. The bad guys are trying to louse up nets, spoil contacts with interference, make DX pileups a mess, organize repeater wars, keep AM alive on 75, jam RTTY or SSTV transmissions, etc.

You know what I do when I hear some ass proving he is one on the air? I go ahead and tell him what I think of him and the lousy things he is doing. Oh, this makes me some enemies, no doubt about that . . . but they are enemies I am proud of and point to with pride. I don't think you'll hear many bad guys claiming friendship with Wayne Green . . . nor many good guys giving me the bad mouth. I would not want as friends those enemies of whom I am aware.

So much for the soapbox this July . . . now, about those bicentennial callsigns. I want to hear all you good guys out there using them . . . proud of the best aspects of our country and the things we have accomplished. Let's look on those callsigns as advertisements for the United States . . . and as promises to do everything we can to make it better . . . to put ourselves on the line to fight as best we can the bad things . . . the arrogance of big business . . . of government. When something is wrong let's stamp our foot and try our very best to make it right. It is not easy to stick up for your rights . . . particularly when everyone else is shuffling around uneasily, trying to figure out how to avoid trouble.

Troublemakers started our country . . . and they will keep it strong. It is sometimes absolutely amazing what one troublemaker can do. One lone troublemaker managed to get parking meters outlawed for an entire state! Most of the time the entrenched power of government officials is tough to fight, but each has his weak points and you can find them. They either are appointed or elected, and this means you may be able to get in your licks at re-appointment time or re-election time . . . if all else fails.

The Watergate mess has weakened the power grip of many government agencies on us . . . the FBI, CIA, DIA, IRS, and such . . . but they will build it up again unless we keep the pressures on them. They got much of their power in order to help them fight organized crime; instead, they leveled the power at the less powerful . . . us, the unorganized citizens . . . and left the powerful organized crime

Continued on page 6

...de W2NSD/1

EDITORIAL BY WAYNE GREEN

from page 4

people alone. The results were devastating at times. With a few more troublemakers like those *Washington Post* reporters who blew the whistle on the whole rotten situation, our country will move ahead and get better, little by little.

WAYNE AT ATLANTA

Plans have been made for a one hour "*73* Forum" at the Atlanta HamFestival on Saturday, June 12th. In order to make candid questions and answers possible, I will ask that no recorders be used. There are a great many things going on in and around amateur radio that are being kept a secret from most amateurs, and one of the major reasons why I am prohibited from speaking at most ARRL conventions is that I tell it like it is. Note that the Denver ARRL Convention was forced to cancel my invitation to speak this year because of fear of what I might reveal.

What effect will the current craze for CB have on amateur radio? And what will be the impact of microcomputers on amateur radio? I'll try to put these into perspective for you. In addition, please bring all of the Wayne Green haters you can to the forum and have them ask me about the things they object to that they think I've done. I won't object to some Wayne Green fans, if any can be found on this short notice, just so I won't feel like I'm all alone. If you are not pro or con Wayne Green, please go somewhere else . . . I want to talk with people who at least *care* about amateur radio and if my editorials haven't gotten you either enthused or furious you are so deeply apathetic that you are beyond my help.

AMELIA

My *TV Guide* reveals that Hollywood is working on a three hour TV movie about Amelia Earhart for next season. Since she has been mentioned in the Ancient Aviator, this is timely.

Some years ago, when the book on Amelia came out, I mentioned the curious set of coincidences which enabled me to have heard much of what the book's author spent years trying to find out. For instance, the chap who set up Amelia's plane with the special engine and fuel tanks so that she could take pictures of Truk for our government was a good friend of my father's and I heard about the project shortly after her disappearance.

Truk was a major Japanese naval base at the time and the U.S. wanted desperately to know what was going on there. The whole 'round the world flight of Amelia's was a cover for the one leg where she would zig up and fly over Truk, taking pictures, and then get back on her published route again as if nothing had happened. In order to cover the extra miles involved without losing too much time, she needed a more powerful engine and extra wing tanks.

She apparently made it over Truk okay, but got lost trying to find Howland Island and ended up at Majuro in the Marshall Islands, according to the book. I made two one month rest stops at Majuro between submarine war patrols during WWII, and heard word there of her landing, visit and eventual pickup by the Japanese. They claimed she and the chap with her, who was hurt in the crash, were taken to Saipan.

When I visited Saipan a few patrol runs later, Amelia was mentioned again and the story was that both she and Fred Noonan had died and been buried there. The author of the book came up with the same story, but he had a hard job getting it. Apparently a lot of people are still trying to cover up the Truk overflight. Weird.

You may be sure I'll be interested in seeing the movie on television when they show it later this year.

73 GETS BEST AUTHORS

Several readers have asked why it is that *73* seems to always get the best articles. The answer is not complicated . . . just put yourself in the shoes of an author who has put a lot of work into a project and has written it up for publication.

You want two major things from your article . . . first, you want to reach the largest possible readership . . . hopefully with a good percentage interested in building. Secondly, you want to be reasonably paid for your effort . . . it's only fair.

That sort of narrows the choice down to one magazine . . . *73*. *QST*, the *only* other ham magazine with a substantial readership, doesn't pay for articles . . . and doesn't have all that much readership interested in home building. *QST* reflects the interests of its readers and is only third in the number of construction projects.

While prestige is not always of paramount importance, it is a nice plus . . . and being published in the largest ham magazine is a feather in anyone's cap. It doesn't hurt at all when job hunting is in season to have a few articles you can point to.

Unfortunately, it is getting more and more difficult to have an article accepted for publication in *73* . . . you can see more and more of our rejected articles in the other ham magazines. We don't always get first pick, but most of the time we do. Right now we have a big need for microprocessor-oriented material and digital construction projects. We're always interested in state of the art techniques and new products articles. What have you?

EXAMS WANTED

It has been over a year since we've gathered a set of the FCC exams and we would like to update our collection. This helps us make sure that our license study guides are in every way up to date. Since the FCC can't send out copies of the tests, we have to depend upon readers. It is a bit of a bother, so we'll offer $5 for each different test copy we receive. Novice and Tech exams are the easiest to get, followed by the conditional exams. Since the conditional tests are a bit more difficult than those given at FCC offices, they will be particularly helpful. Let me clarify that offer . . . $5 for each exam that is different for us. We will keep the exams confidential . . . they will be used just for checking study material.

AMATEURS TEST EMERGENCY LOCATING SYSTEM

A test was run recently via Oscar 7 to determine the feasibility of using a satellite repeater for emergency locating of lost people. The test, using a low powered transmitter (under one Watt), indicated that the system was quite workable, and a rough location of the transmitter was determined by processing the Doppler shift of the signal. The test gave the location of the emergency transmitter within about 7 miles. With a little experience, the system could be made to work using transmitter powers of about 100 milliwatts, and locations within two to four miles are expected.

Think of the ramifications of this work! A tiny transmitter about the size of a matchbox could give us the approximate location of any lost person anywhere in the world . . . at sea drifting, in the desert, or perhaps in the mountains. How long before a channel is set up for this service? And then how long before the matchbox rigs are available . . . probably with one chip and a battery. A few more tests will indicate how much antenna is needed . . . a simple whip may do, but it is more likely that one of those small umbrella dish reflectors will give the amplication needed.

Amateur radio again is in the forefront of important technical developments in communications.

PHONE CALLS

Phone calls to *73* . . . please try not to. As bad as the mail is, try to use what is left of the postal service. On subs and address changes please hold tight for at least six weeks before getting nervous . . . our computer is still over 50 miles away and it takes ages to make changes or find out what is happening. Dotty is here to help from about 9-4 Eastern time weekdays. Please do not call except during our business hours . . . and leave us alone on weekends except in the case of really serious emergencies. We are not very friendly to the chap who calls from California at midnight Saturday and explains that, gee, it is only 9 o'clock out there. If you must call – (603) 924-3873.

Dennis O'Brien WB6CBJ/5 uses his new IC-202 portable, establishing a Corpus Christi first by operating "elephant mobile." Dennis, a native of California, is presently in flight training at the Corpus Christi Naval Air Station.

be my guest

visiting views from around the world

Tornado Alert

Radio and television programs are cut short by a special tornado watch bulletin issued by the National Weather Service at Dress Regional Airport.

At his home on Seib Road near Daylight, Hal Wilson moves away from the television to a radio which he and about 120 other members of Tri-State Emergency Net (network) are licensed to operate.

Several members activate radios in their homes and begin talking to one another. The instructions are clear. The amateur radio operators head outside to observe weather conditions and watch for a funnel cloud.

"I've sat up until midnight, 1, 2 in the morning with the fellas trying to sight a storm," says Wilson, an administrative supervisor with Keller Crescent Co. in Evansville.

When a funnel cloud is sighted by one of the radio operators, they use a private number to notify weather service officials immediately. In turn, the weathermen can verify a funnel cloud report by contacting one of the radio operators.

The radio operators are part of a larger group of residents in the Tri-State who volunteer their time as "spotters" for the weather service.

The procedure for sighting funnel clouds and alerting the public has become more sophisticated with the use of licensed radios, weather radar, special high frequency VHF M commercial radio weather stations which broadcast at 162.55 megahertz and switch on automatically with a special signal, and satellites 22,500 miles above earth which take pictures of the earth's surface for weather evaluation.

But even with all the equipment which makes possible more accurate and timely warnings, people are still killed by tornadoes.

Last year alone, there were 917 tornadoes in the United States which claimed 59 lives, according to the National Oceanic and Atmospheric Administration. Indiana, which accounted for 23 of those tornadoes, had no tornado related deaths in 1975.

Roland Guy Loffredo, meteorologist-in-charge at the National Weather Service here, points out that Indiana, Kentucky and Illinois are nearing the period — April and May — when maximum tornado activity has traditionally occurred.

Loffredo says the idea of a "tornado season" is a myth, because tornadoes can occur anytime warm, moist tropical air from the Gulf of Mexico clashes with cold, dry air moving down from Canada.

Typically though, those weather systems clash as seasons change when the earth shifts on its axis and the sun moves from the southeast toward the northwest. For example, Loffredo says that in the very early part of the year the greatest chance of tornadoes is in Florida. By April and May, the chance of tornadoes is great in the Tri-State and by June, areas of Northern Indiana, Northern Illinois and Wisconsin traditionally face the greatest risk of tornadoes.

Tornadoes average about 5 to 10 minutes on the ground. Most leave a path no more than an eighth of a mile wide by two to five miles long. Forward speed averages about 30 miles an hour, but may reach as much as 70 miles an hour.

"As a concentrated force," Loffredo describes tornadoes as the "most powerful of storms." Some of the worst tornadoes occurred on Palm Sunday, 1965, when about 50 twisters slammed into five states, including Indiana, and killed 256 Midwesterners. In 1925, a single tornado tore through parts of Missouri, Illinois and Indiana killing 689 persons.

In recent years, many lives have been spared due at least in part to an improved reporting system.

Weather officials say one of the most destructive tornadoes of all time hit Omaha, Neb., last May 6. More than 2000 homes were damaged or destroyed and property damage was estimated in the hundreds of millions of dollars.

Despite the vast amount of damage, there were only three deaths, and an Omaha newspaper headlined a story: "It could have been worse; but tornado alert worked."

Dale McConnaughay

Reprinted from The Evansville Press *(Ind.), March 18, 1976.*

HAM HELP

Please add me to your list for help with obtaining my license. I will need help in Germany as I will be arriving there on or about 10 July 1976. Telephone number will be Hldg Mil 7565.

Keep up the good work with the magazine, as I thoroughly enjoy reading each and every issue. As you can see from the enclosed request I am finally going to have to get a subscription.

SFC Edwen K. Gause
HQ, USAREUR & 7TH Army,
DCSOPS (FPD-FAB)
APO New York 09403

This note is to say what a fantastic magazine you and the staff put together, and ask for some Ham Help. *73* is responsible for my rebirth into ham radio after a Novice license expired in '66 due to the discovery of girls. After finding a copy of *73* at the local newsstand, I got off my duff and got another Novice, and am now heading for my General via *73's Study Guide* and code tapes — Ken Sessions' book makes theory crystal clear and easy to learn.

Now for the help. I've got a Harvey Wells R9A receiver with no manual or schematic . . . so if you can't tell me where I might find one, please run a Ham Help asking for a chance to buy or borrow one for copying.

Thanks for presenting an alternative viewpoint for the ham who isn't "League" oriented, and keep that great magazine rolling off the presses.

Greg Magarie WN1VIL
58 Wyman St.
Arlington MA 02174

Please include me as a Ham Helper for anyone who wants his Novice, Technician or General ticket.

Kevin C. Potter WA6DNW
646 Fairview Ave. Apt. 7
Arcadia CA 91006

Please add my name to your list of Ham Helpers.

I hold the amateur Extra, Restricted Radiotelephone Permit, C.A.P. ticket, C.B. license and am studying for the Commercial 2nd Class. I am Club Trustee and President. I work 20 meters CW about 95% of my time on the air. My equipment lets me operate on 80, 40, 20, 15, 10, 6, and 2 meters.

The Siouxland Amateur Radio Club meets every Wednesday night, 7:00-9:30 pm. We have 41 members, many of whom came from the CB bands when they found out how much more fun they could have with the amateur license. All will have passed the code test before you get this. Some members drive over 50 miles each way.

Our club is ready to help anyone who is really ready to study and not just expect it to be handed to them. We have found it takes from 3 to 7 weeks to get the code up to about 7 wpm, depending on how badly the license is wanted.

For any help or information, please contact me.

Neil Prather WB0CQU
2215 Douglas St.
Sioux City IA 51104
(712)-277-3989

I need help with re-learning the code and brushing up on some theory, and I'm willing to trade some physical work around your shack for some technical assistance.

Robert Hilton
2746 Astro St.
Alexandria VA 22306

I need a dual gang 365 pF variable capacitor. It is for QRP use, so it must be small. I would appreciate anyone's help in finding one.

Gregory Danzker WN2ZDV
4000 Old Post Road
Seaford NY 11783

Autobiography of an Ancient Aviator

W. Sangen Green
1379 E. 15 Street
Brooklyn NY 11230

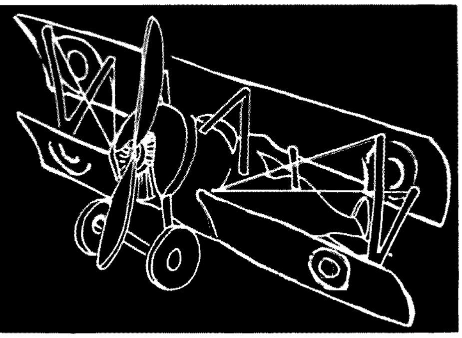

Amelia

When I put the cover on my typewriter last month, I had just returned from a 25 day swing around the country on an inspection tour of the more active airports. All but 3 of the 14 airports visited were city-owned; some were city-operated and some were leased to private operators. All had money problems, and nearly all had high tension wires on at least one approach to the field. I have a copy of my lightly padded expense account for the trip, which totaled $610. That included all transportation, meals, hotels, entertaining, etc. That was in 1929 when waiters, no matter how insulting they might be, would only get a 10% tip.

Now I had to get down to the business of changing a small flying field into an airport. The Ludingtons had already engaged the Airport Development and Construction Company of Philadelphia to do the engineering part of the job. My part was to tell A.D.C. what we wanted and where we wanted it, to keep a check on materials and workmanship, to approve designs and layouts, and to generally supervise the job. There was a small dirt floor hangar already on the field, with a lean-to which served as an office during the construction period.

There is nothing very exciting about building an airport, so I'll spare you the details. It took nearly a year to complete Central Airport, which included two hangars with lean-tos for shops and offices, a combination administration and station building, boundary lights, a beacon light tower, a BBT floodlight for night landings and two paved runways. In order to provide extra income, we built a public swimming pool and a miniature golf course, and leased a corner lot for a gas station.

When I got back from my survey trip around the country on February 8th, I learned that Bob Hewitt, General Manager and Chief Pilot of the Ludington Philadelphia Flying Service, had been critically injured in an automobile accident a few days before. So I made myself available to pinch hit for Bob on any flying jobs when they needed help. The Flying Service had quite a stable of airplanes: a clipped wing Waco 9, 3 Waco 10s with different engines, a Fairchild FC2, a Fairchild 71 and a Travelair 6000. Then, for fun, they had a Taperwing Waco. My flying for them included passenger hopping, testing, demonstrating and some cross-country trips (some more interesting than others).

Early in the morning of April 27, 1929, Bob Hewitt, who was still on crutches, phoned me and said that the Chamber of Commerce was *willing to pay* to have a plane fly down to Wilmington that morning to pick up Amelia Earhart and bring her back to Philadelphia for a reception and dinner in her honor. So I dashed out to the airport and found that they already had the new 6 passenger Fairchild 71 on the line and warmed up. Since it was my first flight in that type of plane, I took it around the field and landed it a couple of times before heading for DuPont's private field near Wilmington. I got Amelia to Philadelphia in plenty of time for her luncheon engagement. Next day (also on the Chamber of Commerce) I took her on an aerial tour of the "City of Brotherly Love."

Later in April, Brooks Parker, an insurance executive, wanted to fly a party down to the races at Havre de Grace, Md. One hitch was that he wanted to be set down on the track infield. It was early and there were very few people on the infield, the approach was good, only a low fence to get over, so we set down with plenty of room. Getting the field cleared off after the races for our trip home was a bit more of a problem.

On July 3, 1929, the Ludingtons started a summer weekend line from Central Airport to Cape Cod, departing Central Friday afternoon and arriving back Monday morning. The Fairchild 71 and Travelair 6000 were assigned to the run and four

Dinner in honor of
Amelia Earhart Putnam
in recognition of her
Solo Trans-Atlantic Flight
given by the
Aeronautical Chamber of Commerce
of America
June twentieth, Nineteen thirty-two
The Waldorf-Astoria

Speakers

CHARLES L. LAWRANCE
PRESIDENT, AERONAUTICAL CHAMBER OF COMMERCE OF AMERICA, INC.

DON L. BROWN
PRESIDENT, PRATT & WHITNEY AIRCRAFT COMPANY

HON. W. IRVING GLOVER
SECOND ASSISTANT POSTMASTER GENERAL

AMELIA EARHART PUTNAM
GUEST OF HONOR

Menu

SUPREME OF MELON TRI-COLOR

STRAINED CHICKEN GUMBO CREOLE
PAILLETTES AU PARMESAN

HEARTS OF CELERY RIPE AND GREEN OLIVES
SALTED ALMONDS

FILET OF ENGLISH SOLE BONNE FEMME
PARSLIED BERMUDA POTATOES

MOUSSELINE OF SWEETBREADS REGENCE
WITH FRESH MUSHROOM SAUCE

SAUTE OF BABY CHICKEN PORTUGAISE
WITH TRUFFLES DU PERIGORD
TOMATOES PROVENCALE
NEW GREEN PEAS

COLD ASPARAGUS TIPS d'ARGENTEUIL
CALIFORNIA DRESSING

FROZEN MOUSSE MIRABELLA
WITH FRESH BRANDIED PEACHES
ASSORTED FANCY CAKES

DEMI-TASSE

Sanger Green and Amelia Earhart, Philadelphia Airport, April 4, 1929.

pilots (including myself) were provided with neat conservative uniforms. I had the honor of flying the first passengers in the Fairchild. Two of the passengers wanted to deplane at Jamestown (an island in Narragansett Bay across from Newport). The others were going to our terminal in a field on the Coonamessett Ranch near Falmouth. I never had even seen either place and my Jamestown passengers had no idea of where we could land, so after looking around a bit I set the ship down in a cemetery that had enough unobstructed room. We were not entirely welcome. Some of the people in the crowd that gathered were saying things about desecration and police, so I unloaded the passengers quickly and took off before Smokey could get there.

Although the line was supposed to be from Central to Cape Cod, there were usually variations. One time I had to find a place to land on Fisher's Island and several times I had to land at Martha's Vineyard or Nantucket (the latter two are islands just south of Cape Cod). There are a lot of deserted beaches on the south side of Martha's Vineyard, so when I had to go to Nantucket I would fly along them at treetop height and give my passengers a view of the "buff" bathers rushing to cover up. On one trip late in August I had to go to Nantucket with a stop at Newport. Headwinds had made me a trifle late, so by the time I left Nantucket alone for Falmouth it was getting real dusky. There were no lights on the field at Coonamessett, but Bob Hewitt, who had gone ahead of me in the Travelair, had a half dozen autos lined up at the approach to the field with their headlights shining down the field. Since I didn't have enough gas to take me to Boston, I had a "Hobson's choice" and came in over the parked cars as low and slow as I could. The lights didn't illuminate very much of the field so on touchdown I cut my ignition switch and stood on the brakes. I ended up about three feet from a big haystack.

The Coonamessett people really "did themselves proud" (as they say in New England). We had a small cottage, fully equipped, to ourselves. Our arrival night dinner always consisted of all the steamed clams and lobsters we could eat, with all the trimmings and a homemade desert. All our meals over the weekend were on the same scale. Regrettably this Cape Cod caper only lasted one season (1929). I guess the passengers were buying their transportation cheaper than the Ludingtons were.

Next month some happenings at Central Airport, air races, etc. Hope you have as much fun reading the column as I have writing it.

THIRTEEN HOURS AND THIRTY MINUTES

Firsts

In the Log of Amelia Earhart Putnam

1920	Learned to fly in California. Established Women's altitude record of 14,000 feet. (Kinner Airster)
June 17–18, 1928	***First*** woman to span the Atlantic in an airplane, flew as a passenger with Wilmer Stultz, pilot, and Louis Gordon, mechanic, from Trepassey Bay, Newfoundland, to Burry Port, Wales, 2,140 miles in 20 hours and 40 minutes. (Whirlwind-powered Fokker "Friendship").
September-October, 1928	***First*** woman to make round-trip solo transcontinental flight across United States. (Avro Avian)
March 28, 1929	Fourth woman to receive transport pilot license from Department of Commerce.
November 22, 1929	Established world speed record for women over a closed circuit course at Detroit with an average speed of 184.17 miles per hour. (Wasp-powered Lockheed Vega)
December 14, 1930	***First*** woman to fly an autogiro in the United States.
April 8, 1931	Established an altitude record of 18,415 feet for autogiros at Willow Grove, Pa. (Whirlwind-powerd Pitcairn)
May 28--June 22, 1931	***First*** to make a transcontinental flight across the United States in an autogiro. (Whirlwind-powered Pitcairn)
May 20-21, 1932	***First*** woman to fly an airplane solo across the Atlantic. ***First*** person to span the Atlantic twice by airplane in non-stop flight. Her time, 13 hours and 30 minutes for the 2,026 miles from Harbor Grace, Newfoundland, to Londonderry, Ireland, was the fastest for the Atlantic crossing and established a world's distance record for women. (Wasp-powered Lockheed Vega)

Editor:
Robert Baker WA1SCX
34 White Pine Drive
Littleton MA 01460

CONTESTS

ARRL STRAIGHT KEY NIGHT

Starts: 0100 GMT Saturday, July 3
Ends: 0700 GMT Sunday, July 4

Check *QST* for any changes in the rules!

Basically, rules require the use of a straight key only. Send "SKN" instead of "RST" during QSOs, to help identify contest stations. On 80-40-20 meters, try 060 to 080 kHz up from the bottom edge of the band. On Novice bands, try 10 kHz up from the bottom of the Novice band. After the contest period, send a list of calls of the stations contacted during the contest period, plus your vote for the best fist heard. Please mail entries as soon as possible to ARRL, 225 Main Street, Newington CT 06111.

QRP SUMMER CONTEST

Organized by the Activity Group-CW in Germany
Starts: 1500 GMT Saturday, July 3
Ends: 1500 GMT Sunday, July 4

A maximum of 15 hours' operation is allowed during the contest period, with the 9 hour pause taken in a maximum of 2 parts. General call is "CQ QRP." Maximum power for QRP stations is 9 Watts input.

EXCHANGE:

RST and QSO number/input. Add "x" if transmitter is CO or VXO controlled.

SCORING:

All QSOs are valid. Own country – 1 pt.; own continent = 2 pts., and DX = 3 pts. per QSO. Add an additional 3 points per QSO for a QSO with another QRP station. Handicap points (hcp) are given if either station is using below 3.5 Watts input or is xtal controlled, with a maximum of 4 hcps possible. Both stations multiply QSO points by 1 plus the hcps. Example: W2XX works G9XX, exchange 589 001/2x from W2XX, 579 100/4x from G9XX; both stations score 9 pts. for the QSO (3 pts. for DX x 3 hcps – both xtal, W2XX less than 3.5 Watts). Multipliers are 1 for each country in own continent and 2 for each DX country per band according to latest DXCC list (but call areas in JA, PY, VE, VK, W, and ZS count as separate countries). Final score is total QSO points times total multiplier.

QRO STATIONS:

Same rules, but input power is not limited. Use QRO and only QSO with QRP stations. Scoring is the same.

ENTRIES:

Send a "mini-log" by July 31st to: Hartmut Weber DJ7ST, D-3201 Holle, Kleine Ohe 5, Fed. Rep. of Germany.

CALENDAR

Jun 26 - 27*	ARRL Field Day
Jul 3	Straight Key Night
Jul 3 - 4	QRP Summer Contest
Jul 17 - 19	CW County Hunters Contest
Jul 24 - 25	ARRL Bicentennial Celebration
Aug 7 - 8	10-10 Net Summer QSO Party
Aug 14 - 15	European DX Contest – CW
Aug 21 - 22	SARTG Worldwide RTTY Contest
Aug 21 - 23	New Jersey QSO Party
Sept 4 - 5	ARRL VHF QSO Party
Sept 11 - 12	European DX Contest – Phone
Sept 18 - 19	Scandinavian Activity Contest – CW
Sept 25 - 26	Scandinavian Activity Contest – Phone
Sept 25 - 27	Delta QSO Party
Oct 8 - 10	CD Party – Phone
Oct 9 - 10	RSGB 21-28 MHz Contest – Phone
Oct 16 - 17	RSGB 7 MHz Contest – CW
Oct 16 - 18	CD Party – CW
Oct 30 - 31	CQ Worldwide DX Contest – Phone
Nov 5 - 8	IARS-CHC-FHC-HTH QSO Party
Nov 6 - 7	RSGB 7 MHz Contest – SSB
Nov 6 - 8	ARRL Sweepstakes – CW
Nov 13 - 14	European DX Contest – RTTY
Nov 14	OK DX Contest
Nov 20 - 22	ARRL Sweepstakes – Phone
Nov 27 - 28	CQ Worldwide DX Contest – CW
Dec 4 - 5	ARRL 160 Meter Contest
Dec 11 - 12	ARRL 10 Meter Contest
Dec 31	Straight Key Night

* = described in last issue

CW COUNTY HUNTERS CONTEST

Starts: 0000 GMT Saturday, July 17
Ends: 0600 GMT Monday, July 19

The CW County Hunters Net (7055 and 14070 kHz) invites all amateurs to participate in the 1976 contest. All mobile and portable operation in less active counties is welcome and encouraged. General call is "CQ CH." Portable or mobile stations changing counties during the contest may repeat contacts for QSO points. Stations on county lines give and receive only one number per QSO, but each county is valid for a multiplier. Each station may be worked once per band.

EXCHANGE:

QSO number; category (portable = P, mobile = M); RST; state, province, or country; and county (for US stations only).

SUGGESTED FREQUENCIES:

3575, 7055, 14070, 21070, 28070 kHz.

SCORING:

QSOs with fixed stations count 1 point per QSO; portable or mobile stations score 3 points per QSO. Multiply the number of QSO points times the number of US counties worked. Mobiles and portables should calculate their score on the basis of total contacts from within each state.

AWARDS:

Certificates will be awarded in three categories.

F – Highest fixed or fixed portable station in each state, province, and country with 1,000 or more points.

P – Highest station in each state with 1,000 or more points operating portable from a county which is not his normal point of operation.

M – Highest mobile in each state operating from 3 or more counties with a minimum of 15 QSOs per county.

Trophies will be awarded to the highest single operator station in the US in categories P and M. The awards committee will issue additional awards where deemed appropriate.

LOGS:

Logs must show category, date/time in GMT, station worked, exchanges, band, QSO points, location and claimed score. All entries with 100 or more QSOs *must include a check sheet* of counties worked or be disqualified from receiving awards. Enclose a large SASE for results. Logs must be postmarked by September 1, 1976, and be sent to: CW County Hunters Net, c/o Jeffrey P. Bechner W9MSE, 673 Bruce Street, Fond du Lac WI 54935.

QRP AMATEUR RADIO CLUB INTERNATIONAL, INC. 1976 ANNUAL AUGUST QRP CONTEST

Starts: 2000 GMT Saturday, August 21
Ends: 0200 GMT Monday, August 23

This contest is open to all amateurs, and all are eligible for awards.

EXCHANGES:

MEMBERS = RST/RS; State/province/country; QRP nr. NON-MEMBERS: RST/RS; State/province/country; Power.

SCORING:

Stations can be worked once per band for QSO and Multiplier credits. Each MEMBER QSO counts 3 points, NON-MEMBER QSO 2 points. Stations other than W/VE count as 4 points. Score = QSO points times total number states/provinces/countries PER BAND times power multiplier.

MULTIPLIERS:

More than 100 Watts input power . . . X1; 25-100 Watts input power . . . X1.5; 5-25 Watts input power . . . X2.0; 1-5 Watts input power . . . X3.0; Less than 1 Watt power . . . X5.0.

FREQUENCIES:

CW = 3540, 7040, 14065, 21040, 28040. SSB = 3855, 7260, 14260, 21300, 28600. Novice = 3720, 7120, 21120, 28040. All freqs. are plus or minus 5 kHz or so, to dodge QRM.

CALL:

CQ QRP DE (callsign).

AWARDS:

Certificates to the highest scoring station in each state, province or country. Other places will be given depending on activity. One certificate for the station showing three "skip" contacts using the lowest power.

LOGS:

Send logs to: E. V. Sandy Blaize W5TVW, 417 Ridgewood Drive, Metairie LA 70001. Send full log data, including your FULL name and address, bands used, equipment, antennas and power used. Entrants desiring result sheets should enclose a #10 SASE. Logs must be received by September 30, 1976 to qualify.

EURD AWARD

This award is offered by the DARC in three classes for two-way RTTY contacts with different European countries and prefixes. All amateur bands, including VHF, may be used. All contacts must be confirmed and dated after Jan 1st, 1965. Contacts during the RTTY WAE DX Contest can be used for EURD endorsements, provided the log of the requested station is also received. Requests must

Continued on page 158

LETTERS

THE PROVERBIAL LADDER

73 and its staff have helped me more than *QST* and the staff that publishes that magazine. Matter of fact, I'm thinking seriously of not renewing my subscription to *QST* when it expires this coming August. The ARRL hasn't been that much of an aid in my climb up the proverbial ladder of hamdom.

Your records, which I'm certain you keep for at least a year, will show that I'm not only a subscriber, but nave ordered, thusfar, your 14 wpm tape. Which, by the by, is "working" after about 2 hours of practice. Of course, I've had X number of hours on the air as a Novice, and other means of practicing CW for that damn FCC General Exam.

I am going for the General Exam and would like not to blow my hard-earned $4.00 and time sans at least studying your *General License Study Guide*, for which I've enclosed my personal check for $5.95. When (positive thinking, as opposed to "if") I get my General, I'll be happy to let you know.

Always good luck to you and your crew, and keep on saying what you please when you please.

Joe Marymount WN2TXQ
Teaneck NJ

THE WRONG PEW

Thanks for your excellent service in regard to my subscription. I really didn't think I would receive all the copies I requested, and so quickly. You rank far above any magazines I have subscribed to. Matter of fact, I shouldn't even compare you with other magazines. Being a man of good faith, I should have believed and expected great things from you. Well, perhaps I was weak — but am now made strong by people interested in other people. Enclosed is a Reader Service request I know I will receive the same prompt service.

You see, it's all-important for someone like me, who is just starting out in this ham business, to get all the encouragement possible. I don't know which rig to begin to shop for. With your help, I'm sure I'll be able to make a wise and educated choice.

Keep the articles coming which push us beginners along, because we often get discouraged when there is no help around. We especially get a droopy mustache when we get bogged down in code. It's so hard to turn the corner from 12 wpm to 13 wpm.

Would you by chance know if anyone in my area willing to help me with that final step in code? Just about there, but not quite. Also, Wayne, I have a nice CB rig I'd like to sell someone. It'll help finance my ham rig. I have two brothers who are hams — both were into CB. Ah, the joys that are theirs now. I don't want to be left behind. So please help.

My brothers, Leo and Gene, are in other states, so all they can do is to keep the cards and letters pushing me.

As I go through the letters to the editor, I notice all the compliments — so what more can I add, but that I'm dealing with people and not just another money machine. Thank you!

Brother Andrew Patin, C.S.S.R.
Saint Alphonsus Church
224 Carrier Street, N.E.
Grand Rapids MI 49505

Brother Andrew, you are sitting in the wrong pew as far as code is concerned . . . stuck at 12 wpm indeed! This tells me plainly that you are trying to avoid the Wayne Green Code Cassette system of learning the code, a system which does not try to get you to learn the code at ten different speeds . . . just at two . . . six wpm and 14 wpm. Obviously, you are trying to penny pinch and not invest in the 14 wpm code cassette which 73 happily foists off on unsuspecting readers . . . and this is the root of your trouble, and a well rounded round of tsks for any brothers of yours who steered you into the 12 wpm cul de sac. Thanks for the nice letter otherwise and harken to the above. — Wayne.

To RADIO '73' Mag de G4CVZ
Confirming our QSO on any MHz
at all day GMT on April 21 19 76

Report: Ur rating sigs were R 5+ S 9+ T 9+
QSB no fading at all!
QRM none when reading '73'!
QRN none except turning pages.
Wx ? to busy reading!

Rig Here: Two eyes!
Tx—FLdx 400 running 240 watts
Rx—FRdx 400
Ant H.&.1.mini quad.
Remarks Tnx for excellent magazine qso- cuagn next issue.
Tnx for QSO '73' OM

PSE QSL Direct or via RSGB
CHEERIO es 73s de
"Al" Neilson

Having just received my April issue of *73*, I thought I had to put pen to paper to compliment the gang on producing what surely must be rated as the best ham magazine in the world! I subscribe to quite a few American and British mags, and for sheer quality, quantity, practicability and up-to-date state of the art articles, *73* not only beats the rest — it murders them! I am sure my postman has the lifelong task of delivering my *73* mag!

The only disadvantage is that *73* spoils me for choice, as any IC article causes me to have constructor's itch.

Keep up the great job and don't change anything (except perhaps the price, which is understandable!).

Al Neilson G4CVZ
Liverpool, England

HEAD AND SHOULDERS

We really enjoyed "The Smart Power Supply," by WA4SAM in the March issue of *73*.

The same IC has been used here for about four years now with great success. We use it for controlling an electroformation process. We are using 144 plug-in cards almost identical to John's card. The cards control 345 transistors mounted on water-cooled heat sinks. For dc power we use two rectifiers rated at 500 Amps, at 75 volts each.

John's article was well written and to the point. His kind of article caused us to subscribe to *73* in the first place!

Keep up the good work, and keep the computer articles coming each month! *73* is head and shoulders above the other ham rags!

Wm. Dunnivant
Commercial Electronics
Baxter Springs KS

ROTTEN LITTLE KID

Last week I mailed you a letter inquiring as to the whereabouts of tapes I ordered. Today, I finally received the tapes! Your package was postmarked February 11, 1976. It took our glorious, gov't operated Post Office 12 days to move the tapes from N.H. to Ala. Heaven help us if the liberal politicians have their way and take over the oil companies. Can you imagine the oil delivery? The tapes are excellent!

Lucius B. Ramsey
Spanish Fort AL

A short note to praise the 13+ wpm tape. I sent for one and used it a total of 6 hours and 35 min. I took the General test at Syracuse April 14 and the test (code) sounded like 10 wpm — and I passed. Had taken the test last Jan., but blew the code so I took the theory and got a Tech. So I tried your tape and it really gets the job done. Now I am going for my Advanced. After all, my 19 year old son passed his Advanced last Nov., the rotten little kid.

Waldo Longwell, Jr. WA2EMJ
Horseheads NY

ADDS, TOO!

I am an owner of the Texas Instruments SR-50 calculator. One day I was listening on 2 meter FM and working out a math problem at the same time. I noticed that the oscillator in the SR-50 was generating a respectable signal on 146.82.

In fact, the LED display generates random noise pretty much evenly distributed through the rf spectrum. It really makes a good noise source to peak up a VHF receiver. By wrapping 2 or 3 turns of wire around the display and connecting the wire to the antenna jack, you create an instant noise source. This probably holds true for any calculator with an LED display.

If you have an SR-50, press 99. Then press the factorial key. You will hear a pulsed 1 kHz tone in your receiver. This is an error display, so any answer that the SR-50 sees as invalid will cause the display to blink.

This blinking occurs about twice per second, depending on battery conditions. This beeping is especially nice when the natural noise level is especially high. Oh, yeah, the SR-50 can add, too!

Paul J. Dujmich WA3TLD
McKeesport PA

PLEASING MARY

Just a short note to tell you I enjoy your publication a great deal. Sometimes they're a little late getting to me here in the Philippines, but then I'm not always in town when they arrive. Anyway, I hope you will forgive me

for sending in my Reader Service forms a little late; I didn't mean to upset Mary — I didn't even know . . . anyway if it helps I will make a few extra forms myself to send in next month (pestilence in triplicate). If all your readers do likewise, I'm sure Mary will be very pleased!

J. B. Fields
Subic Bay, R.P.

"MIRANDA" OF MAGAZINES

Thanks for the "announcement" on the Table of Contents page in the April 1976 edition of *73*. It looked like a "throw-in" as a "rub it-in-yar-nose" adjudicative settlement. Sometimes the Telephone Company can be didactic to the point of absurdity. The "announcement" smacked of the literary style used by the Surgeon General. No doubt the California Court started an irreversible trend . . . and your mag had it first once again . . . Think of it, a Section 315 for publishing; a "Miranda" of magazines . . . wow . . . articles on two meter transmitters now have to be preceded with: "Note to readers: Construction of this project is illegal if you steal the parts to build it." The April antenna issue should have announced boldly: "Construction of any antenna in this super edition of *73* could lead to your violating peeping tom laws" . . . or how about articles on weather satellites . . . "Note: Information obtained from weather satellites may not be sold to foreign governments for purposes of aggression."

The California Court quite obviously has little appreciation for the integrity of your clientele. Further, they understand little about our need to know. Your reaction was probably like mine and thousands of others: "So what? Most knew how it was done anyway." What difference does it make? Telcos find it hard to give you information which is "cleared" for dissemination, so now maybe some of our "legitimate" questions will be answered. Quite frankly, the article gave me a new respect for the importance of "in-band energy suppression" on my approved QKT coupler. Thanks to that big bold announcement, I was able to relocate and reread the article to see if I had missed anything the first time around.

John S. Hollar W3JJU
Harrisburg PA

TOO LONG TO WAIT

I want to say what I have been going to for some time. In my opinion your magazine, large or small format, is undoubtedly the most up to date with state-of-the-art on the market today. The only problem is, unlike other ham magazines, one month is too long to wait between issues. Keep up the good work.

K. L. Freeland W1ANF
Nashua NH

PROUD W

Because I read another ham's *73* and admire it and its publications, here's a communication pertinent to the times and the year:

Our W and K prefixes have been so well known throughout the world for such a long time that everyone knows the American hams thereby. There is no reason to masquerade as something else with that alias, "AC" ! I'm proud to have held W1, W8 and W9 calls over 44 years and shall continue with the proud "W".

Temple Nieter W9YLD
Evanston IL

ACE

Everybody, it would appear, has a name. Amateur operators are called hams (ugh!), operators in the Citizens Radio Service are CBers, and so forth. But what of the person who likes to experiment with computers???!

In answer to the question above, I would like to propose that a person who "plays" with computers be called an "ACE": *A*mateur *C*omputer *E*nthusiast. What do you think?

Theodore J. Cohen W4UMF
Alexandria VA

The term "Computer Hobbyists" may stick . . . if any newsletters in the field discover how to spell it (several spell it hobbiests). Most hobbies have not developed terms such as "ham" . . . not that we know for sure where that term really got started. Camera hobbyists are called camera nuts, camera fiends, etc. Amateur astronomers are called just that. ACE is ace with me, but I'll bet you can't make it stick. — Wayne.

TAPEWARN

While the "three-for-a-buck" cassette tapes are clearly unsuitable for data storage use, our experience is that "the best you can get your paws on," as suggested in your interesting "Nifty Cassette" article (May, 1976), is a potentially considerable expense that is usually not required. While price is a general indicator of oxide integrity and of construction quality, it is an inefficient and costly guide, since the extended high frequency performance is not at all necessary for data uses.

Extensive testing by a consortium of local schools and colleges resulted in the recommendation of three brands for a similar data storage use: Maxell, Scotch Highlander, and Omega. Highlander tapes are widely distributed at modest cost, while the Omega is a private brand, manufactured by 3M, and distributed in the midwest. The latter has proven particularly suitable in our own system, as it is lowest in cost, yet utilizes a fine mechanical system of stainless steel chutes rather than rollers; moreover, it is available in 30 minute length, required by some drives and no longer widely available in quality tape lines. We recommend the 30 or 45 minute lengths over 60 minute size, as the tape is thickest in these sizes. Using 30 minute Omega tapes for semicommercial use, we have had no problems attributable to tapes in several months.

I caution against purchase of "digital tapes" at premium price; at least one custom "digital cassette" label is simply a rebranded, untested, standard line TDK audio cassette. On the rare times that real-and-true *data certified* tape cassettes are required, we have found that Artec International has attractive prices — especially in modest quantities — at their nationwide branches. If readers should desire Omega cassettes in locations where these are not available, our school bookstore will supply purchasing assistance upon receipt of an SASE. Send SASE to: Resource Access Center, 3010 4th Avenue South, Minneapolis MN 55408.

Richard B. Koplow
Minneapolis MN

NO DREDGING

I spoke to you one day last year when you called Gary W3DTN looking for FCC info to publish. My question to you at the time was, how good are those new code tapes? Are they really different? You said they were much better than Brand X and Y. You know — you were right. They are good. Thanks.

Now I have a question for this year. As background, I have a 240Z and I understand you push around a Z yourself, so maybe you will be sympathetic to my problem. I want to run 6 and 2, plus broadcast, off one antenna (hopefully replace the B/C antenna with a Larsen). Thus far, I have found no understandable info on splitters, filters, matching units, etc., that would help. As I don't want to clutter up an otherwise clean car with multiple antennas — I need help. Any chance you could dredge up something to publish on the subject?

Marvin T. Storey WA3RKA
3212 Cordoba St.
Silver Spring MD 20904

No. — Wayne.

COMPUTER CALL

Persons in the Huntsville/North Alabama area interested in any aspect of amateur or hobby computing are invited to join the North Alabama Computer Club (NACC). Please contact me.

Dr. Jack W. Crenshaw
1409 Blevins Gap Rd. S.E.
Huntsville AL 35802
(205)-859-7344 or
(205)-883-7973

OH, HENRY!

I would like to take this opportunity to express my pleasure with the superior service provided by Henry Radio. I have had several dealings with the Butler, Missouri store by mail during the last year and have always found their service to be very prompt and highly satisfactory.

Ken Morgan WA5VUZ
Albuquerque NM

ALDELCO DELIVERS

You may have received a few letters of complaint concerning the failure of Aldelco to deliver 2N5590 rf transistors. We had an unfortunate situation in that we inadvertently advertised the price of this unit at $4.15, which is below our cost. We sent out our entire stock of 2N5590s and immediately ordered more. Delivery from the factory has been held up and we hope to be able to fill every order at the $4.15 price in the next few days, even though we lose money on every order sent out. Being new in the mail order business, we are trying to build a reputation for good service and quality merchandise. Every order received is sent out within 48 hours if we have the item in stock. However, like any other company, we have our problems like outbreaks of the flu, vacations, etc. We will, however, continue to do our best to serve our customers.

Alfred G. Smith
Aldelco
Lynbrook NY

IN LOVE

Okay, I cannot put it off any longer: I must write and tell you how much I enjoy *73 Magazine*. The May 1976 issue came recently and, as usual, I quickly leafed through it and noted all the good articles I would peruse at my leisure. Later I shall fold down the corners of those pages on which I find something of special interest. Even later I may index everything.

I admit it — I love *73*. Before you people get puffed up with pride, though, there are other magazines I also enjoy. In fact, the mailperson must wonder if I do anything but read magazines. Magazines such as *The Audio Amateur* (I'm glad to see they've wised up and moved to N.H., even if it is just down the street from *73* Some day I must come to Peterborough: then I can not only visit *73*, *TAA*, and Old Colony Sound; I can also drool over the tools at Brookstone. Ah, heaven . . .), most of the *Popular Whatevers, Analog, Scientific American, Track & Field News*, etc. However, so far only *73* (and, yes, Wayne) has inspired me to think about writing articles. I have even gone so far as to jot down ideas. And

I'm not even a ham yet, although I'm working on it, helped considerably by your study guides and code tapes.

Keep up the good work.

Gordon J. DeWitte
Somersworth NH

P.S. Count me among those pleased and impressed with James Electronics and S. D. Sales. Both have been great.

NOBODY ELSE WILL

Today I heard a story on WBBM (780 AM in Chicago) which reported that an amateur radio station was misguiding aircraft on landing at Rome's airport.

I called the station and complained. They gave me the number of Reuters, the source of the story. The complete story filed in Rome stated that authorities believed the problem was due to a terrorist group. I called WBBM back and explained that they should not give incomplete stories when the meaning thereby is completely changed.

Both the station and Reuters commented that I was nitpicking. Not at all. There are now at least 3 people in the news business who now know the distinction between a terrorist with a pirate radio and an amateur radio operator.

We have to start somewhere. If amateurs don't defend themselves, nobody else will.

Keep stirring things up.

John Lorenz WA9RDV/9
Kankakee IL

AUSTRIAN WELCOME

The Austrian Radio Amateur Society (ÖVSV) celebrates its fiftieth anniversary this year. From June 17th until June 20th, 1976, there will be a large festivity at Krems an der Donau (near the Wachau, Lower Austria), in memory of the foundation of the ÖVSV. We will be most pleased to welcome as many XYLs, YLs and OM from abroad as possible.

Here is a general summary:

Thursday, 17th of June: Approach competition on 144 Mc to 146 Mc from 1 pm to 6 pm.

Friday, 18th of June: Foxhunting competitions. Participants from abroad are most welcome. 80m foxhunting in the morning, 2m foxhunting in the afternoon. In the evening there will be a jolly evening with "Heurigen" (new wine) at Langenlois.

Saturday, 19th of June: Sightseeing at Krems. Opportunity to make a boat trip on the Danube to the famous Wachau. In the afternoon: coach trip to the Wachau and the abbey of Melk. In the evening, a big ball and distribution of awards at the Stadtsaal Krems. The military band of the Niederösterreich command will play.

Sunday, 20th of June: Memorial ceremony, speeches and symphony concert. Afterwards, a cold buffet. Afternoon and evening: farewell party at Stift Göttweig (abbey of Göttweig).

Organization center: Parkhotel Krems. Room reservations (priced between 100 and 350 Austrian schillings): Fremdenverkehrsamt Krems, Kunstlerhaus, WichnerstraBe, A-3500 Krems, Austria.

To commemorate the fiftieth anniversary of the ÖVSV, all OE stations have been authorized to use the prefix OE50 from the 1st of April until the 1st of July. During the same time, a special station will operate with the callsign OE50/3XKW.

To help with the approach, there will be some repeaters active on the 2m band, especially OE3XHW (Hohe Wand) on R5, OE3XPA (St. Pölten) on R8, OE1XWW (Wien) on R6 and a special repeater, OE3XSA (Krems), on R4.

Participants from abroad will have plenty of opportunity to meet many Austrian OM personally. We look forward to an eyeball QSO at Krems an der Donau!

Dr. Emmerich Rath OE3RE
Langenlois, Austria

EXTRA DOUGH

How many of you go out and spend $50 or more for a 12 volt power supply to run your solid state two meter rigs? I purchased a Regency HR-2B without the ac power supply. Next I went around to the local gas stations until I found a good used 12 volt battery (which I only paid $1.00 for). Then I ordered a small trickle charger from Olson Radio for $1.49. I have been running the rig ever since.

Also, this makes for a nice emergency setup in case the ac power goes off. With the extra dough left over, take the XYL out for supper.

Richard A. Little K9EEH
Sterling IL

LEAN ON OTHERS

William Cook's letter in the May *73* has moved me to respond. My sympathy goes out to you, Bill. Constructing a transmitter, receiver, T-R circuit, or whatever, from scratch can be an overwhelming project for the beginner.

I've built receivers, transmitters and test items from magazine articles, and frequently departed from the author's suggested parts layout because some critical item or other had to be substituted. Bill, things are never perfect. Even prospective hams have to make trade-offs and compromises. So you might as well start now.

This letter is written by a guy who used to invade the junk heaps in search of cast off radio parts. Once I even brought home a rubbish-contracted skin disease. Many of the scrounged parts ended up in transmitters used on the air. You see, money to buy parts was kind of scarce in those years.

My recommendation to you is to look for kindred souls in your area through Ham Helps or by listening on 75 or 2 meters and tracking hams down from their addresses in the Radio Amateur's Callbook Magazine. (Sneak a look in the Callbook while visiting a radio parts store some time, if it's too expensive to buy one.)

Then get acquainted. Lean on others for awhile, until you learn to walk alone in this tremendous hobby. Maybe some day you can become a leader. Good luck.

Paul L. Schmidt W9IDP
Bloomfield IN

P.S. Your town of Alpena, Mich., has some 30,000 people. There should be a ham or two in town who can help you get started.

SWAPPER

I'll be glad to swap my time in helping you set up, program, debug, etc., a microprocessor, in exchange for using or acquiring a system, the hardware. I have background in systems/programming: many systems, many languages, assembly and higher level languages. Please contact me to discuss situation.

Toby Maki
102 Minott Rd.
Westminster MA 01473
(617)-874-5410

YASME: THE BLOW STRUCK!

This is a report on the YASME operation during the month of March in the Republic of Nauru under the call C21NI. Approximately 7500 QSOs were made with amateurs in 116 countries. While, at other stops in Pacific areas, Europe was workable from only a few minutes to a very few hours, from C21NI there were some beautiful openings to Europe. One day the band was continuously open to Europe for 10 hours.

The first QSO from C21NI was with JA5DH on 1 March 1976. The last QSO was with UB5JBY on 25 March 1976. Some 1500 QSOs were made during the last half of the ARRL SSB DX competition and again some 1500 QSOs were made during the last half of the ARRL CW DX Competition.

We made arrangements by radio for our next stop to be YJ8 (New Hebrides). We had written permission to operate there. We had an apartment rented there (from YJ8DE). We had our plane tickets, etc. It was impossible in Nauru to obtain a visa to anyplace, but we had been told in the Fiji Islands (by the French Chargé d'Affairs) that no visa was required for a 30 day visit. We arrived safely in Vila, New Hebrides; all of our gear was taken off the plane; people were waiting to greet us. Transportation was waiting to take us to our apartment. Then the blow struck! The Head of Immigration (British) said that we could not enter the country without a visa and that he would not issue one in Vila. We were ordered to get back on the plane that we had just left and leave the country immediately. We protested and almost refused to go — however, there were lots of policemen there and it appeared that we would be either forcedly put on the plane or forcedly taken to jail. After holding up the plane for nearly an hour, we found ourselves and all of our gear back on the plane bound for New Caledonia.

Lloyd Colvin W6KG
Iris Colvin W6DOD
Noumea, New Caledonia

THE MIDAS TOUCH

It is unfortunate that there are those who feel that criticism should be expurgated from *73*. There are many countries today where criticism is discouraged and the press contains references to omniscient leaders whose infallible decisions have meant the Midas Touch to the fortunate publications who are privileged to pay taxes and make other support (and who might disappear if they were to voice any critical comments). I suppose if I were high on the totem pole, I would not like criticism either; but criticism is good for the public — it keeps officials on their toes, keeps people honest, and in the long run is beneficial to all society. Whereas I may not agree with editorial content, I support a person's right to that opinion and his right to publish it. That's the American plan! (And we can buy tubes from Amperex and RCA!)

Paul Schuett WA6CPP/WA7PEI
Wallace CA

R/Os NEEDED

For benefit of any readers who are unemployed, please place this small note somewhere in *73*: " Radio Officers needed urgently. Six months endorsement program with pay very likely."

D. Boone
POB 330
Valley Mills TX 76689

RACE RESULTS

This past February I wrote to you complaining of the lateness of my first issue of *73* (I had not received my January issue yet) and challenged you to beat the ARRL response to a similar complaint some years back that I made. Namely, my challenge

Continued on page 51

AMSAT

FIELD DAY WEEKEND

Since extra Field Day points can be gained by making contacts via the OSCAR satellites, it has been decided to change the operating schedule of OSCAR 6 for FD weekend. In order to keep the satellite's battery more fully charged, the first three orbits of the 26th of June which would normally be on will be kept off. The following AMSAT-OSCAR 6 orbits will be turned *on* for FD QSOs (starting Sat., June 26, 1976):

Orbit	Eq. Crossing Time (GMT)	Longitude °W	Call Areas in Range
16906	18:07	327.6	Northern W1, 2, 3, 8, 9, Ø, 7 states & VE, KL7, KH
16907	20:02	356.4	Same as previous orbit
16908	21:57	25.1	W1, 2, 3, 8, 9, Ø, VE, KL7, northern W4 & W7
16909	23:52	53.9	All states except KH6, all VE
16910	01:47	82.6	Same as previous orbit (June 27)
16911	03:42	111.4	W5, 6, 7, 8, 9, Ø, VE3-8, KL7
16915	11:22	226.4	W1, 2, 3, 4, 8, 9, VE1-4
16916	13:17	255.1	All states except W6 & KH. VE1-6 & eastern VE7
16917	15:12	283.9	All states except KH6
16918	17:07	312.6	All states except southern W4
16919	19:02	341.4	Northern W1, 2, 3, 8, 9, Ø, 7 & VE, KL7, KH6
16920	20:57	10.1	W1, 2, 3, 8, KL7, VE & northern W9, Ø, 7

The uplink passband of OSCAR 6 is 145.90 to 146.00 MHz; downlink is 29.45 to 29.55 MHz. AMSAT-OSCAR 7 will be in Mode B (70cm/2m) on GMT Saturday June 26. The uplink passband for Mode B is 432.125 MHz to 432.175 MHz. Downlink is 145.975 to 145.925 MHz. OSCAR 7 will switch to Mode A (2m/10m) at 00:00 GMT on Sunday, June 27, 1976. The Mode A uplink is from 145.85 to 145.95 MHz and the downlink is from 29.4 to 29.5 MHz. AMSAT-OSCAR 7 will be about 27 minutes behind its older brother OSCAR 6 during the Field Day weekend. The MAXIMUM effective radiated power for either satellite is 100 Watts. ERP equals the antenna gain times the power delivered to the antenna.

OSCAR 6 ORBITAL INFORMATION

Orbit	Date (July)	Time (GMT)	Longitude of Eq. Crossing °W
16960	1	0136:49	80.1
16972	2	0036:45	65.1
16985	3	0131:41	78.8
16997	4	0031:37	63.8
17010	5	0126:33	77.6
17022	6	0026:29	62.6
17035	7	0121:24	76.3
17047	8	0021:20	61.3
17060	9	0116:16	75.1
17072	10	0016:12	60.1
17085	11	0111:08	73.8
17097	12	0011:04	58.8
17110	13	0105:59	72.6
17122	14	0005:55	57.6
17135	15	0100:51	71.3
17147	16	0000:47	56.3
17160	17	0055:43	70.1
17173	18	0150:38	83.8
17185	19	0050:34	68.8
17198	20	0145:30	82.6
17210	21	0045:26	67.5
17223	22	0140:22	81.3
17235	23	0040:18	66.3
17248	24	0135:13	80.0
17260	25	0035:09	65.0
17273	26	0130:05	78.8
17285	27	0030:01	63.8
17298	28	0124:57	77.5
17310	29	0024:53	62.5
17323	30	0119:49	76.3
17335	31	0019:45	61.3

OSCAR 7 ORBITAL INFORMATION

Mode	Orbit	Date (July)	Time (GMT)	Longitude of Eq. Crossing °W
A	7433	1	0006:02	51.3
8	7446	2	0100:19	64.9
A	7459	3	0154:36	78.4
B	7471	4	0053:56	63.3
A	7484	5	0148:13	76.9
B	7496	6	0047:33	61.7
AX	7509	7	0141:50	75.3
B	7521	8	0041:10	60.1
A	7534	9	0135:27	73.7
8	7546	10	0034:48	58.5
A	7559	11	0129:05	72.1
8	7571	12	0028:25	56.9
A	7584	13	0122:42	70.5
BX	7596	14	0022:02	55.3
A	7609	15	0116:19	68.9
B	7621	16	0015:39	53.7
A	7634	17	0109:56	67.3
B	7646	18	0009:17	52.1
A	7659	19	0103:34	65.7
B	7671	20	0002:54	50.5
AX	7684	21	0057:11	64.1
8	7697	22	0151:28	77.7
A	7709	23	0050:48	62.5
B	7722	24	0145:05	76.1
A	7734	25	0044:25	60.9
8	7747	26	0138:42	74.5
A	7759	27	0038:03	59.3
BX	7772	28	0132:20	72.9
A	7784	29	0031:48	57.7
B	7797	30	0125:57	71.3
A	7809	31	0025:17	56.1

QRP TEST

All users of the 70 cm to 2m Mode B transponder of the AMSAT-OSCAR 7 satellite are invited to participate in a special three day low power (QRP) test which will occur on June 16, 17 and 18, 1976. The test will begin at 0000Z, 16 June, when the satellite switches from Mode A to Mode B on orbit #7245. It will be kept in this mode by AMSAT telecommand stations located in Canada and Australia. The final orbit of this three day test will be #7282 on Friday, June 18.

All stations using the transponder are urged to run *10 Watts* effective radiated power or lower, and those who cannot reduce power to this level are asked not to transmit in the 432 MHz uplink passband, since their presence will reduce the effectiveness of the many low power users who will participate in the QRP test. Signal reports sent should include the erp being used (i.e., RST 569 erp 5 W), so that those listening can get an idea of how effective low power can be via AMSAT-OSCAR 7 when the high power stations aren't hogging most of the available power.

Remember that one Watt into a 10 dB gain antenna system will produce the maximum recommended 10 Watts effective radiated power. If an exciter runs 10 Watts or more output, a half wave dipole will be a big enough antenna to use, and, if more attenuation is needed to reduce the erp, an old piece of lossy coaxial cable can be added to the existing transmission line. It doesn't really matter how the 10 Watts erp is achieved. The important thing is to run QRP for the three day test and send the results along with a station description to AMSAT, PO Box 27, Washington DC.

FOR YOUR EYES ONLY

Microprocessor/Microprograming Handbook
by Brice Ward
293 pp., $6.95.

The economic advantages of the microprocessor, or "computer on a chip," have made them a popular and commonplace device in many commercial and industrial applications. The prolific use of microprocessors is bringing this technology to any forward-thinking person. As one becomes more familiar with the capabilities of microprocessors, his imagination devises applications.

Microprocessor/Microprograming Handbook provides a coherent introduction to the world of microprocessing. This readable text examines the vocabulary, architecture, memory systems, machine language, and assembler language of this exciting new technology. It provides valuable insight for the student or hobbyist interested in automation, electronics, or small computer applications, the engineer or technician who may be familiar with one microprocessor but would like to sample other architectures and their capabilities, and the business manager whose product could be improved by the incorporation of a microprocessor or who would like to be more familiar with the devices his staff is using.

Microprocessor/Microprograming Handbook is more of an introductory text on 4 and 8 bit microprocessors than a thorough handbook. Although there are more than 40 manufacturers of these devices, this text discusses the Motorola 6800 and draws heavily on the Intel 4040 and 8080 devices. Reference is made to 2 and 16 bit devices, but little information is provided.

As a text, it provides a sweeping view of the topic with enough detail to obtain a thorough understanding of several specific uPs. The devices detailed in this text are among the most popular used today. Its general ease of reading, along with helpful appendices for Abbreviations, Terminology, Manufacturers, and Support Chip Sets, provides valuable footing for amateurs and professionals interested in knowing more about these devices.

Electronic Conversions, Symbols & Formulas
by Rufus P. Turner,
Tab #750, 224 pp., $4.95.

This rather inclusive reference includes practically every formula that an electronic hobbyist would need for any use. Basic mathematical laws, functions, formulas and constants are presented, followed by fundamental and useful electronic design formulas.

Circuit design is usually accomplished in one of two ways — the amateur's way (cut and try) and the engineer's way (figure it out first). With this compendium of the needed data, the engineer's way isn't so hard after all, thanks to calculators. Wonder how to design that bandpass filter or wind that coil? Do the abbreviations f_{co} and h_{oe} confuse you? They, with all other common electronic abbreviations, are there. Wonder how to convert Maxwells to Webers or footpounds to kilogrammeters? These and other conversions, common and obscure, are compiled.

Let's face it: Most of us don't remember those formulas we saw on

our license exams, except the easiest. If you should need them, here they all are. It practically makes electronics math look easy.

Op Amp Circuit Design
& Applications
by Joseph Carr
Tab Books #787,
Blue Ridge Summit PA,
282 pp., $6.95.

The most popular and useful device to emerge from the development of linear ICs is the operational amplifier. Their versatility is amazing, as they are an inexpensive and convenient approximation of the "perfect" amplifier.

This new book brings together the theory and circuitry needed to apply op amps to a wide range of applications. After a thorough, well illustrated description of op amp basics, applications are presented for use in computation, test equipment, active filters, power supplies and more. There's not much you can't do, it seems, with today's op amps.

Besides the conventional op amps, exotic and newer devices are also covered, keeping the circuit designer up to date. Anyone with an interest in designing or building audio, power supply, instrumentation or other linear circuitry would do well to read this book.

Build-It Book of Miniature Test
& Measurement Instruments
by Robert P. Haviland
Tab #792, 238 pp., $4.95.

Here is a complete guidebook for the construction of a wide range of test instruments. None of them is expensive to build, and all are compact and modern.

Complete instructions are given for all of the devices, including printed circuit layouts and parts lists. There are also chapters on general construction practices, to help your projects look professional. Newcomers to construction would do well with this book, as it is not written exclusively for the expert. Experts will still find use for the gear, though.

Included are RCL bridges, audio signal generators, general purpose test amplifiers, a Q-meter, sound level meter, and digital counter. And there are more circuits than that. Fifty measurement functions are possible with the devices described, and that's not bad for $4.95!

SOCIAL EVENTS

FLUSHING NY
JUNE 5

The Third Annual Hall of Science Radio Club auction and flea market will be held Saturday, June 5 at World's Fairgrounds, Flushing, L.I. Admission $1.00, sellers $2.00. No sellers commission but 10% fee on auctioned items. Zoo, boating, children's farm, art and science museums adjacent. Field Day goodies galore. For more information write: Box 1032, Flushing NY 11352.

HUNTINGTON WV
JUNE 6

The Tri-State Amateur Radio Association (TARA) 14th Annual Hamfest will be held Sunday, June 6th at 11:30 am at Camden Park, Rt. 60 West, Huntington WV. Talk-in W8VA/8 146.04-.64, .16-.76, and .34-.94. For more information and tickets write to: TARA, PO Box 1295, Huntington WV 25715.

WINFIELD PA
JUNE 6

The Penn-Central Bicentennial Hamfest will be held Sunday, June 6 at the Union Township Volunteer Firegrounds, Winfield PA, 11 miles south of I-80 on Route 15. Contests, auction, flea market — start at noon. Registration $2; XYL, children free, free parking. Contact W3GPR.

BELLEVILLE MI
JUNE 6

The Southeastern Michigan Amateur Radio Hamfest will be held Sunday, June 6, 1976, from 6 am till 4 pm, at the Wayne County Fairgrounds, Belleville, Michigan. 20 minutes from Detroit, 10 minutes from Ann Arbor. I-94 at Belleville Road Exit. Featuring: indoor exhibits, swap and shop, trunk sales, food and refreshments, camping space adjacent to fairgrounds available at a nominal free, and hotel and motel reservations will be available. 5 major prizes. Tickets $2 advance, $2.50 at gate. For more information and tickets write to: Hamfest, Box 1976, Belleville MI 48111. Talk-in 37/97 rpt — 52 simplex. Sponsored by: A.R.R.O.W. Repeater Inc., WR8ADH.

OLD WESTBURY NY
JUNE 6

The Electronic Flea Market sponsored by L.I. Mobile Amateur Radio Club (LIMARC) will be held Sunday, June 6, 1976 from 9am to 4 pm (rain date: June 20) at the N.Y. Institute of Technology, Rte. 25A and Whitney Lane. Admission $1 per buyer; $2 per space seller. For additional information call W2KPQ (516) 938-5661. Talk-in on 25/85.

PISCATAWAY NJ
JUNE 6

The Tri-County Radio Association Inc., flea market will be held June 6, 1976 at Nick's Grove, 318 William Street, Piscataway NJ. Opens at 10 am, admission $1, tables $4, half tables $2. Door prizes. Talk-in 146.52, 147.855/147.255. For further information call (201) 725-0778 or (201) 752-4307 or write: PO Box 412, Scotch Plains NJ 07076.

MANASSAS VA
JUNE 6

The Ole Virginia Hams A.R.C. is sponsoring its second annual Mid Atlantic area "Quality" Hamfest for Sunday, June 6, 1976, at the Prince William County Fairgrounds, Route 234, ½ mile south of Manassas, Va. Directions: take I-95 to Route 234 at Dumfries, Va., or I-66 to the Manassas exit, then south on Route 234. Talk-in on 146.37-97, 147.84-24 and 146-52 simplex. Featuring — large display and exhibit area, electronic flea market, and door prizes. For more information and advanced registrations write to: WA4GVX, 1708 Sharp Drive, Woodbridge VA 22191.

PRINCETON IL
JUNE 6

The Starved Rock Radio Club Hamfest will be held June 6 at the Bureau County Fairgrounds, Princeton, Illinois, same place as last year. Free coffee and doughnuts from 10 to 10:30 am. Camping and trailer space on a first come first served basis for a nominal fee. Official dedication of Starved Rock Repeater by ARRL officials. Advance registration, $1.50 until May 20, after that/or at gate $2.00. For more complete information, motel list, maps, etc., furnish long SASE. For reply, write: Starved Rock Radio Club W9MKS, RFD #1, Box 171, Oglesby IL 61348. (815) 667-4614.

SHAKER HEIGHTS OH
JUNE 11-13

The Midwest Affiliation of Computer Clubs (M.A.C.C.) is sponsoring the first annual Midwest Regional Computer Conference at Cleveland in June, 1976.

The event is being hosted by the Cleveland Digital Group and will take place in Shaker Heights, Ohio at the Stouffer Somerset Inn, 3550 Northfield Road. Dates are June 11, 12, and 13. Tickets are $2.00 in advance and refreshments will be available.

The event will have a Trade Show type format with each manufacturer having a booth or booths for his own use. Additional demonstrations, technical sessions, games (such as Star Trek), etc., will be going on almost continuously. We are planning on a rather large flea market and, of course, program duplication, copying and media conversion facilities will be available.

More complete information and tickets can be obtained by writing to: The Midwest Affiliation of Computer Clubs, PO Box 83, Brecksville OH 44141.

SIOUX FALLS SD
JUNE 12-13

The Sioux Falls Amateur Radio Club, Inc. and the Sioux Valley Repeater Association, Inc. will hold the 1976 South Dakota Ham Picnic in Sioux Falls on June 12 and 13 at the Sioux Empire Fairgrounds on Sioux Falls' west side, ½ mile east of Interstate 29 and the 12th Street off ramp — follow the "QSY" signs. A talk-in will be on 3950 kHz by the S.F.A.R.C. Club station, WØZWY. Members of the S.V.R.A. will provide information and assistance on the WRØACK 16/76 repeater. For further information, please send an SASE to Sioux Falls Amateur Radio Club, PO Box 91, Sioux Falls SD 57101.

ATLANTA GA
JUNE 12-13

The ARRL Southeastern Division Convention and the Atlanta HamFestival 1976 will be held on June 12-13th at Dunfey's Royal Coach Motor Hotel, I-75 at Howell Mill Road, Atlanta GA. Special HamFestival rates of $16 single, $21 double are in effect. Individual registration is $3 in advance, $4 at door; family registration $5 in advance, $6 at door. Flea market spaces (outdoors) are $5 each, first come, first served. For more information and pre-registration forms, write: Atlanta HamFestival 1976, 53 Old Stone Mill Road, Marietta GA 30062 or telephone area (404) 971-HAMS day or night.

ARNOLD MD
JUNE 13

The Maryland Mobileers Amateur Radio Club will hold its Sixth Annual Hamfest on Sunday, June 13, 1976 at Anne Arundel Community College, Arnold, Maryland. Gates open at 9 am. Registration: $2. Tailgaters: $3 plus registration fee. Drawings to be held at 3 pm. First prize: $200 Savings Bond. Talk-ins on 146.10/.70 — 146.52 — 146.16/.76.

WILLOW SPRINGS IL
JUNE 13

The 19th Annual ABC Hamfest will be held Sunday, June 13, 1976 sponsored by the Six Meter Club of Chicago, Inc. Located southwest of Chicago at Santa Fe Park, 91st and Wolf Road, Willow Springs IL. Advance registration $1.50; at the gate $2.00. Large swap row, picnic grounds, AFMARS meeting, refreshments. Advance tickets from Don Marquardt K9SOA, PO Box 79, Lyons

IL 60534 or any club member. Talk-in on 146.94 FM or WR9ABC 37-97 (PL2A).

GRANITE CITY IL
JUNE 13

The Egyptian Radio Club, Inc., W9AIU Hamfest will be held Sunday, June 13, 1976 at the club house located north of Granite City, Illinois, ¼ mile south of the Old Chain of Rocks Canal Bridge. Swapper Row, games for the kiddies, lunch served, cold drinks, ladies' white elephant sale and Bingo. Talk-in on AF9ACA 146.76. Admission free.

AKRON OH
JUNE 20

The Goodyear Amateur Radio Club WA8UXP of Akron, Ohio will hold their 9th Annual Fathers' Day (Hamfest Picnic), on June 20, 1976, at Wingfoot Lake Park located east of Akron, Ohio, one mile west of Suffield, Ohio, on County Rd. #87 and near County Rd. #43. Huge flea market, displays, swap and shop, prizes on the hour, picnic tables available. Adult and children's play area all day. Join us for an enjoyable day of entertainment. Hours: 10 am to 6 pm. Family admission S2 prepaid; S2.50 at gate. For details, tickets, map and program, write to Floyd T. Gilbert WB8ALK, 1976 Newdale Ave., Akron, Ohio 44320.

SCHEREVILLE IN
JUNE 20

The Midwest Repeater Association with the Indiana Dunes Amateur Radio Club's Hamfest will be held June 20, 1976 at the Lake Hills Senior Citizens' Picnic Grove, 8100 Austin Road, Schereville IN, from 8 am to 5 pm. Food, drinks, door prizes, etc. Talk-in 146.31-.91 (WR9ADK) or .94, .52. Tickets or more information send SASE to I.D.A.R.C., PO Box 5, Dyer, Indiana 46311.

HONOLULU HI
JULY 3-4

The Honolulu Amateur Radio Club will hold its Hamfest/Swapmeet on July 3 and 4, 1976. The Swapmeet will be held on the grounds of the Kaimuki High School, 2707 Kaimuki Avenue, Honolulu, between the hours of 0800 am and 3 pm. Charges per stall will be $2. The Hidden Transmitter Hunt will start at 0900 am on 4 July 1976. The transmitter will operate on 146.52 MHz. Participants will meet at the Pancake House, Ala Moana Center, Honolulu, prior to 0900 am for contest instructions. Registration fee will be S1 per vehicle. Prizes will be awarded to the top 3 winners. For additional information and participation in the HARC Hamfest/Swapmeet, write: George Stillman KH6AN, PO Box 7111, Honolulu, Hawaii 96821.

DUNSEITH ND
JULY 10-11

The 13th Annual International Hamfest is scheduled for July 10 and 11, 1976 at the International Peace Garden between Dunseith, North Dakota and Boissevain, Manitoba. Many prizes to be won. For more information write: Craig R. Schmidt WBØGFZ, Co-Chairman, 1976 Hamfest, Reed Hall #302, North Dakota State University, Fargo ND 58102.

SANTA MARIA CA
JULY 11

The Satellite Amateur Radio Club is sponsoring the Santa Maria Amateur Radio Picnic And Swapfest to be held on Sunday, July 11th, 1976, beginning at 12 noon at the Newlove-Union Oil Picnic Grounds on Orcutt Hill. Watch for the signs marking the turnoff, 1 mi. south of Clark Ave. on US 101. Talk-in will be on 146.52 and 7280 kHz.

The highlight of the event is the Santa Maria style barbecue, to be served at 2:30 pm. All the meat, salad, beans, bread and salsa that you can eat. Soft drinks will be available, but bring your own beer.

The main door prize is a Tempo One 80-100 meter transceiver. Other prizes, too. Swap tables available at $3.00 each.

The meal alone is well worth the drive from L.A. or the central valley. Tickets are only S5.00 for adults/$2.50 under 12, and can be obtained by sending a check made out to Santa Maria Swapfest, Route 1, Box 55A, Santa Maria CA 93454.

Please obtain tickets in advance so that enough meat can be ordered.

CHARLESTON SC
JULY 11

The Charles Towne Hamfest will be held at the Gaillard Municipal Auditorium on Sunday, July 11, 1976, in Charleston SC. Registration is $2, which includes a door prize ticket. Activities include an indoor flea market, displays, home brew contest, CW copying contest, historic tours, and a special program on the Marconi Wells Fleet Wireless Station. Saturday activities include OCWA, MARS, S.C. SSB Net Banquet, and a hidden xmtr hunt. Talk-in on 34/94 and 3915. For further information write — Charles Towne Hamfest, Box 4555, Charleston SC 29405 or check into the S.C. SSB net on 3915 at 7 pm local time.

PORTAGE IN
JULY 18

The Lake County Amateur Radio Club's 2nd annual hamfest is July 18 at the Issac Walton League in Portage, Indiana. Take 1-94 to Ind. 249 exit, then north on Ind. 249 ½ mile. Tickets $1.50 advance, S2.00 at gate. Write: Herbert S. Brier W9EGQ, 409 S. 14th St., Chesterton, Indiana 46304.

TERRE HAUTE IN
JULY 18

Turkey Run Hamfest has MOVED! New location is the Vigo County Fairgrounds on Highway 41 just South of Terre Haute. There will be prizes galore, lots of flea market space under a roof, XYL Bingo, and plenty of overnight camping will be available. Presale tickets are available 4 for $5 or $1.75 ea. At the gate 3 for $5 or $2 ea. For further information or tickets write to Wabash Valley Amateur Radio Assn., P.O. Box 81, Terre Haute IN 47808.

briefs

There is resistance growing in some quarters to the ARRL repeater coordination plan. Many amateurs consider the precedent dangerous; there have been few repeater wars lately and they tend to get settled without outside intervention. In the most notorious case of the past year, the party causing the trouble (K4LSP) is the ARRL-recognized coordinator for Tennessee, though the offended repeater is in North Carolina — whose own coordinator considers K4LSP's behavior improper.

This year's ITU commemoration in May should see the first of the "N" group callsigns for domestic use. Calls like N62ITU and N38ITU are being assigned, as well as the "more conventional" ITU calls like KQ3ITU. It's not rare DX, just special events calls in the United States. While any licensee can request an ITU call, participation is somewhat limited by the $29 special license fee.

A "point of sale" CB licensing system is now going into operation. A form that comes with every new radio will permit self-assignment of a temporary callsign, that will become effective upon mailing the application (with fee) to the FCC. The postal receipt will validate the authorization.

Hopefully this system will help, not hinder, the FCC's attempts to reduce the licensing delays in the Amateur Service. While Novice licenses are being processed in about two months, some are taking longer and the percentage of lost applications is still high.

The FCC has ruled that the telephone companies may no longer prohibit interconnection of privately purchased equipment to the phone system. As of May 1, you could attach privately owned telephones and similar non-hostile devices to your telephone line without paying a special rate for an interconnect coupler.

Certain "amateur" equipment companies are doing a big business in sales of HF SSB equipment to the 27 MHz "HF" operators, who operate from 27.3 to the bottom of ten meters. The current published roster of HF International members lists about 40,000 names; bootleg registration "calls" are now well into the "HFC" series. Current amateur worry is that the "220 MHz synthesized CB transceiver" advertised by National Radio Institute in other ham magazines will become popular among CBers — even though 220 MHz CB is a dead issue.

Lloyd (W6KG) and Iris (W6DOD) Colvin have been cruising the South Pacific on a YASME Foundation DXpedition. After their successful C21NI operation on Nauru, they went to YJ8, New Hebrides, where they were denied entry because they didn't have a visa — they had been told that they didn't need one. They had to move on to New Caledonia.

SLATER MO
JULY 24-25

The Antique Aircraft and Amateur Radio Show will be held Saturday and Sunday, July 24 and 25, 1976 at the Slater Memorial Airport. Registration $1 in advance: $1.50 at the door. Buffalo burger feed Saturday night and Sunday noon. Talk-in 3963 kHz, 146.94 and 146.28/.88. For additional information and advance tickets write Dale Beilsmith WØKNF, 807 North Broadway, Slater MO 65349, (816) 529-2173.

CROSSVILLE TN
JULY 24-25

The Oak Ridge Amateur Radio Club, Inc., Annual Crossville Hamfest will be held in Crossville TN on July 24-25, 1976 at the Cumberland County Fairgrounds. Technical forums will be at the Holiday Inn on July 24 and the banquet will be at Holiday Hills Country Club on Saturday night with a Breeder Reactor Program planned. Sunday, July 25, features a picnic, flea market, raffle of many valuable prizes, and "eyeballing your friends" at the fairgrounds.

CANTON OH
JULY 25

The Tusco Amateur Radio Club and the Canton Amateur Radio Clubs are holding their Second Hall of Fame Hamfest on July 25, 1976. It will be held at the Stark County Fairgrounds, Canton, Ohio. This weekend, by the way, is the weekend of the National Pro Football Hall of Fame Football Game and Parade.

FLAGSTAFF AZ
JULY 30-AUG 1

The Ft. Tuthill Hamfest will be held July 30-31 and August 1 at Flagstaff, Arizona at Coconino County Fairgrounds across I-17 from airport. R-V and tent camping. Three days in the tall cool pines. Swapmeet, tech sessions, contests, prizes, pot luck; and exhibits. Talk-in 146.22/82, 146.34/94, 146.52 and 3992 kHz.

Continued on page 156

Arny Cain WB4FDQ
2306 South Ruffner Road
Melbourne FL 32901

Handy Dandy Soldering Iron Cooler Offer

Hey baby, how does that title grab you? If you are at all like me (and you must be something like me or you wouldn't be reading this article, let alone the magazine), you enjoy finding solutions to the nagging little everyday problems found in our favorite hobby. The gadget in the photographs is my solution to a little problem that has bugged me for years. I am sure that there are many of you who have been faced with the same irksome situation: what to do with the mini-iron that you need for working on transistors and ICs, when the damn thing is up to working temperature and you need the hand to do something else.

In other words, where can you put it down? Like you, I've tried ashtrays, saucers, boards with nails, etc. Well, I finally decided to do something about it, and I don't mean buy a factory-made stand. Oh, I could have done it that way but for two reasons. First, I'm cheap! (Besides, it's more fun figuring it out for yourself.) Second, the factory-built stands only give you a place to put the pesky iron down, and I figured that if I was going to build a holder, I might just as well build one that controlled the temperature of the iron as well. As you may have guessed by now, I'm one of those lazy guys who never buys what he can build, and never builds a gadget to do one job if it can be made to do more.

A quick look at the photos will show that this is a project built one hundred percent from genuine junk box parts, and not the kind you have to buy. The base is an old 3"x5"x2" steel black crackle finished (at least it used to be) box that had been used for at least five or six other projects before finally finding respectability as the centerpiece of the workbench. Large green and red jeweled pilot lights of the 7½ W 115 V type are used in the top to show that the device is on (green), and that the soldering iron is on high heat (red), when it is withdrawn from the cradle. I didn't really need the lights, but I

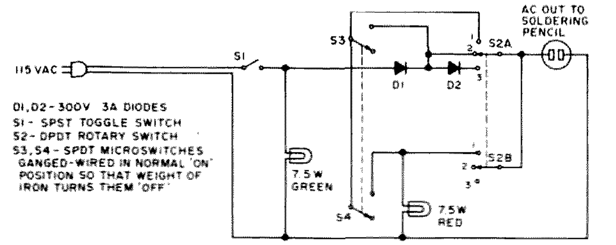

Fig. 1: D1, D2 – 300 V 3A diodes; S1 – SPST toggle switch; S2 – 2PDT rotary switch; S3, S4 – SPDT microswitches gang-wired in normal ON position so that weight of iron turns them off.

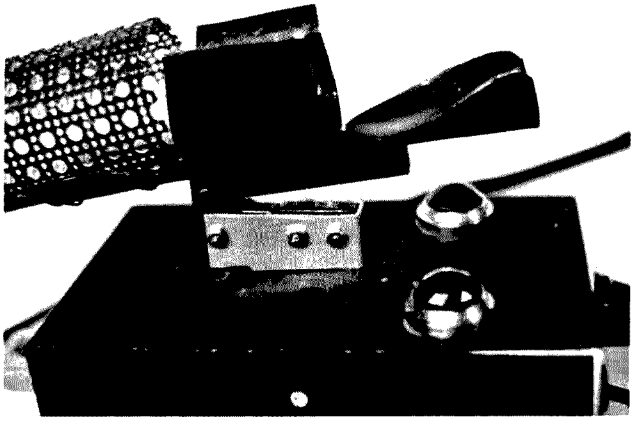

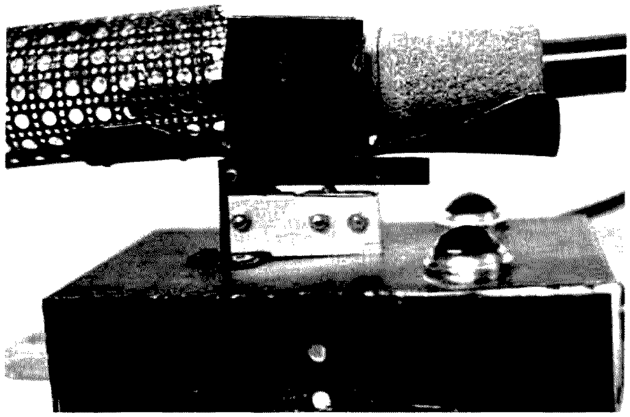

have a lot of them and they filled up two holes in the top of the box that needed filling.

The cradle for the iron is made from scrap aluminum, and the heat shield is a piece of scrap perforated aluminum sheet rolled into a tube and fastened to the cradle. This assembly is fastened to a piece of ¼" square steel rod. I drilled two holes through the cradle and the square rod and hit it with two pop rivets. The rod is now drilled at a point just aft of its balance center so that when the iron is removed it will tilt forward of its own weight. I made a little three-sided post out of scrap aluminum and pop-riveted it to the top of the box (see close-up photo); this provides the pivot point for the cradle and also a place to fasten the microswitches. In my version (I'm sure that there is no one reading this who will ever build a carbon copy), the microswitches are turned off by the weight of the iron on the cradle. As you will note in the schematic, this opens the circuit across a diode, thereby cutting down the heat on the iron when it is at rest and shorting it out when the iron is removed. Removing the iron also lights the red signal light showing that higher heat is being applied and also informing you when you don't put the iron back in the cradle properly.

Of the two switches on the front, the toggle switch controls line voltage, while the double pole triple throw rotary switch selects one of three modes. Number one position is direct line voltage or high heat. In this position the iron is connected at all times directly to the 115 V ac line. In number two position the iron is in series with a 300 V 3 A diode while in the cradle, and directly to the line voltage when it is lifted to be used. The third and last position puts the iron in series with a diode at all times, cutting the heat still further. I have found that the third position is best for soldering tiny leads close to the bases of delicate solid state devices such as HF transistors. The number two position is the one most in use on my bench, since it keeps the iron reasonably hot, but not at high temperature, and within five or six seconds after lifting it from the cradle it is up to full working heat.

The number one position could, quite frankly, have been eliminated but the switch position was there so I just went ahead and wired it in. It is rarely used because it causes tips to oxidize very quickly. The wiring diagram is, hopefully, self-explanatory. I must confess that this simple tool (gadget) is the most used addition to my bench that I have ever built. It has been in uncomplaining constant use for over two years, and only my natural proclivity for procrastination has kept me from sharing it with you before this.

This article is not an exact plan for construction, as should be obvious, nor is it intended as such. As I said in the beginning, if you are anything like me, you will have your own built-in prejudice against doing a carbon copy of anything. So just use the idea as a little prod to the grey cells and come up with your own solution. I'm sure that there are many other ways of doing this, and probably most of you can think of an even better way.

Have at it; there are too many soldering irons sitting around cold in the first place, so put them to work. ■

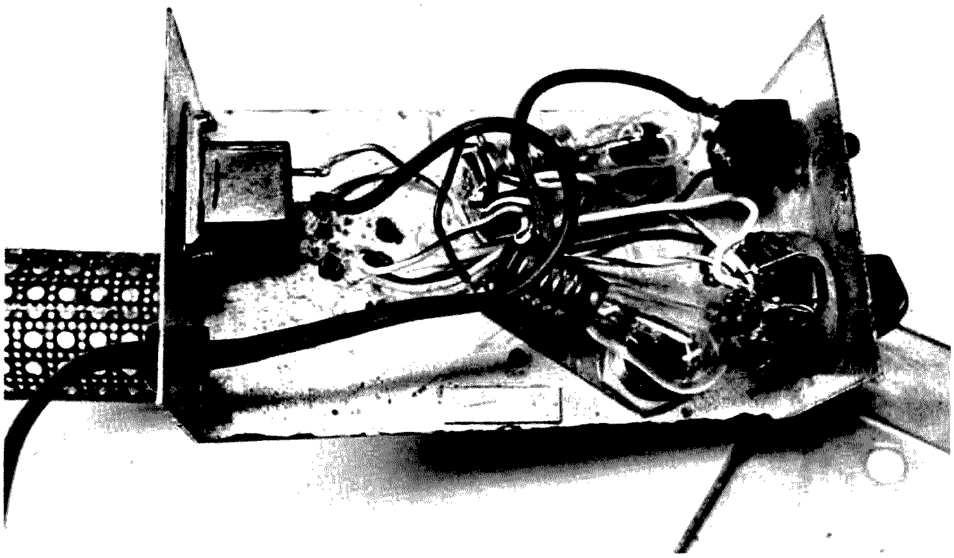

R. L. Way WA9VGS
12116 W. Belmar Drive
Hales Corners WI 53130

Perfect CW

--drive 'em crazy with the Keycoder I

Fig. 1. Keycoder I built by W9UBA.

Fig. 2. The author's version of Keycoder I.

The CW keyboard keyer described here should appeal to any amateur who wants to increase his code speed and send letter-perfect, space-perfect CW — or to anyone seriously interested in teaching or learning the code.

Although there are a lot of articles and letters in ham magazines about amateur radio clubs teaching code, the use of a keyboard keyer as a teaching aid seems to have been neglected, possibly because most such keyers are quite expensive. Keycoder I, however, can be built for \$60-\$75, *including keyboard,* and would make an excellent club project. When used as a code teacher, the keyboard keyer has the following advantages to recommend it:

- Perfect code — The learner always hears correctly formed characters
- Variable speed — Character rate is continuously variable from about 5 wpm to over 50 wpm (unlike code records or cassettes)
- Repetition — The student can practice by himself the characters that he is having difficulty with (again unlike recorded code lessons)
- Instructor need not know CW! — A unique feature — XYLs, harmonics, and other non-hams can help the novice learner without themselves knowing the code

Other technical advantages of Keycoder I are:

- TTL Logic — 9 inexpensive and readily available ICs, plus about 2 dozen discrete components, make up most of the circuit; 7 toroidal cores and another couple of dozen discretes provide an encoding matrix that would require over 100 diodes
- Rf Insensitive — With TTL ICs and only minimal bypassing, no rf problems have been experienced with the two units illustrated
- Self-contained — Power supply, logic, monitor (with tone and volume controls), and output circuit are all contained within the keyboard case
- Simple construction — A commercially available IC board makes wiring the logic easy (simple point-to-point wiring with no critical steps)

Fig. 1 is a close-up photo of the unit built by Charles H. Haut W9UBA (New Berlin WI), who is the author of this project if not of the article, and Fig. 2 shows my keyboard with a few control variations.

Keycoder I is a TTL adaptation of the Touchcoder II keyboard keyer described in the July 1969 issue of *QST*. That article contains a very good discussion of the circuit theory and of the toroidal core transformers used, so this information will not be repeated here. Our theory discussion will take you on a tour of the TTL-version schematic diagram (Fig. 3). For convenience of discussion, the schematic is separated by dashed lines into the following six areas representing functional blocks: (1) dot generator, (2) dash generator, (3) shift register, (4) encoding matrix, (5) monitor, and (6) output stage. The discussion that follows will be so divided also, with some necessary overlapping. On the schematic diagram, the logic state H ("1") or L ("0") is shown for the output of each IC. These states are for static conditions, when no character is being generated.

Dot Generator

IC1 is a 555 integrated circuit timer set up as a triggered multivibrator. The frequency of the multivibrator (and hence the code speed) is determined by the

Character	Flip Flops FF7	FF6	FF5	FF4	FF3	FF2	FF1
A					X	X	
B			X				X
C			X		X		X
D				X			X
E						X	
F			X		X		
G				X		X	X
H			X				
I					X		
J			X	X	X	X	
K				X	X		X
L			X			X	
M					X	X	X
N					X		X
O				X	X	X	X
P			X		X	X	
Q			X	X		X	X
R				X		X	
S				X			
T						X	X
U				X	X		
V			X	X			
W				X	X	X	
X			X	X			X
Y			X	X	X		X
Z			X			X	X
1		X	X	X	X	X	
2		X	X	X	X		
3		X	X	X			
4		X	X				
5		X					
6		X					X
7		X				X	X
8		X			X	X	X
9		X		X	X	X	X
0		X	X	X	X	X	X
.	X	X		X		X	
,	X	X	X			X	X
?	X			X	X		
/		X		X			X
-		X	X				X
$\overline{AR}$		X		X		X	
$\overline{SK}$	X	X		X			
$\overline{AS}$		X				X	

Table 1. Character generation table. Xs indicate the shift register flip flops that must be set to form a given character (also the toroidal core transformers that the wire for that character must pass through).

values of R1-R3 and C1, and is adjustable by means of R2. The duty cycle is 50% for all practical purposes, thus providing dots and character interelement spaces that are equal. (Of course other R and C values can be substituted. Those on the schematic are the ones in W9UBA's unit; I used R1 = 1k, R2 = 50k, R3 = 15k, and C1 = 2.2 uF, with equally satisfactory results.)

R4, R5, and CR1 are bias components that are necessary to make the first dot the same length as following ones. This is because normal timer operation charges and discharges C1 between 1/3 and 2/3 vcc. However, on the very first cycle, C1 is discharged, and has to charge from 0 volts to 2/3 vcc. The resistors, which are merely a voltage divider across the power supply, maintain a bias voltage on C1; CR1 prevents interference with the normal triggering of IC1.

The output of the dot generator (pin 3) is routed to both the output circuit and monitor through two sections of IC4 (NOR gates); the first section is a summing gate (discussed later), and the second section disables the output (and monitor) for the duration of 3 dot lengths at the completion of each character, to provide automatic character spacing.

Dots are generated when pin 6 of IC1 goes low, which occurs only when pin 6 of IC3 goes low.

Dash Generator

As with other keyers (both keyboard and manual), Keycoder 1 forms dashes by filling in the space between two successive dots, thus producing dashes exactly 3 units long. The circuit action is as follows: FF8 is a "D" type flip flop that clocks on the rising edge of pulses applied to pin 11. When no dashes are called for, pin 3 of IC3 applies a "1" to the data input (pin 12) of FF8, and the Q output of this flip flop is high and the $\overline{Q}$ output is low. FF8 is clocked each time a dot is generated but does not change state as long as the IC3 output is high. When a dash is required, pin 10 of IC4 goes high, causing pin 3 of IC3 to go low, and FF8 is readied to toggle when it is clocked. For a dash to be formed, two dots are generated. The first dot is passed through to the output but also clocks FF8. The $\overline{Q}$ output of FF8 then goes high and holds the summing gate portion of IC4 open after completion of the first dot. After arrival of the first dot, pin 1 of IC3 also went low, readying FF8 to toggle back to its static state. FF8 is clocked by the second dot, and its $\overline{Q}$ output goes low again, but the second dot now holds the summing gate open. Hence, the summing gate is open for a period of two dots and the space between them, and a 3-dot-length dash is formed.

This same sequence of events takes place at the completion of each character to automatically provide a 3-dot-length space between characters, but this terminal dash is made silent by applying a high to pin 12 of IC4.

Shift Register

As shown in Fig. 3, the shift register portion of the schematic consists of "D" type flip flops FF1 through FF7, two sections of a triple 3-input NAND gate (the third section isn't used), the remaining two NOR gate sections of IC4, and two gates of a quadruple 2-input NAND gate IC (the fourth section isn't used). In this mechanization, the 3-input NAND gates serve an OR function, one

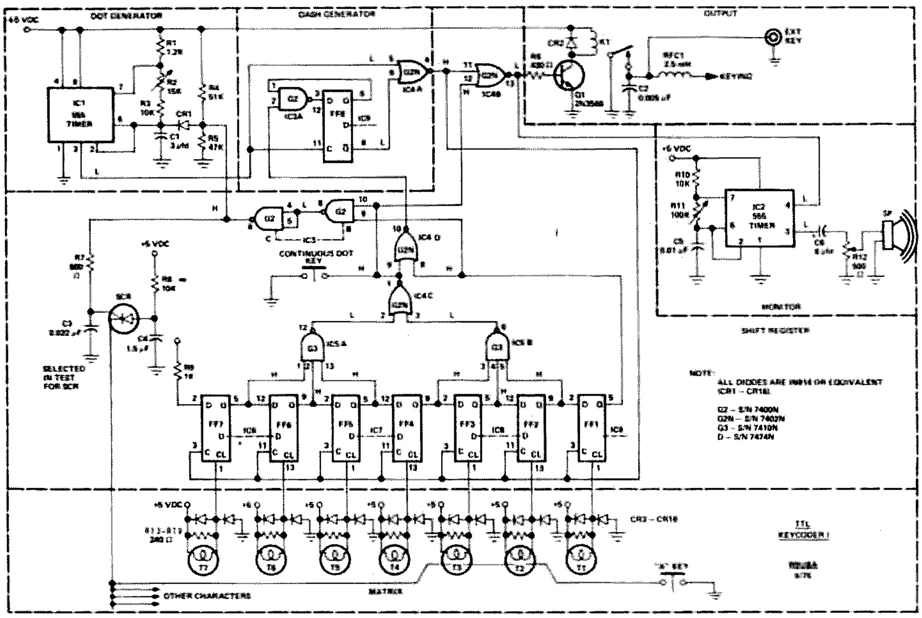

Fig. 3. Schematic.

section of IC4 is used as an AND gate, and pins 4, 5, and 6 of IC3 are really only an inverter, so things aren't entirely as they seem.

The flip flops are all "D" types, and are packaged two per IC. Note that the second flip flop of IC9 is the FF8 previously mentioned. Only the Q outputs (pins 5 and 9) are used, and these are a logic high in the static condition. For our purpose, the flip flops are "set" (Q = "0") by applying a low to their "Clear" terminals (pins 1 and 13). Shifts occur from left-to-right only.

With the foregoing in mind, let's leave the hardware mechanization for a bit and refer to the Character Generation Table (Table 1). Here, the "X"s in the horizontal rows represent the dashes in a character, the "X" furthest to the left is a "silent dash," and the blank spaces to the right of the silent dash represent dots. Although data is shifted left-to-right, we "read" Morse characters in this table from right-to-left. For example, in the row for the letter "P", starting from the extreme right we see a blank space which represents a dot. Moving to the left we find two "X"s, which we know are dashes, followed by another blank space for a dot, and finally another "X" (which is the silent dash to separate this character from the next). In terms of the hardware, the "X"s represent the flip flops that are simultaneously set when a keyboard key is struck, and also the toroidal cores that must be strung to generate that character.

The character generation scheme, which was originally proposed by James B. Ricks W9TO (Evanston IL), has three rules:

1. If only one flip flop is set, a number of dots will be generated, the number being one less than the number of the flip flop set. For instance, in the row for "S", only one "X" appears, in the column headed FF4; therefore 3 dots will be generated.
2. If FF1 *and* any other flip flop are set, a dash will be generated.
3. If only FF1 is set, a silent dash is generated.

As each dot or dash is completed, all entries in the appropriate row of the table are shifted one column to the right, and another of the three above rules is applied. For the letter "B", initially the conditions for rule 2 are met, and accordingly a dash is generated; after one shift to the right, rule 1 applies, and three dots are generated; these three dots produce three more shifts, after which rule 3 comes into effect and the character is completed, followed by a 3-dot-length space.

Returning to the schematic, observe that the static state for the flip flops is for their Q outputs to be high. This results in the other gates in the register being forced to the logic states shown, ending up with pin 6 of IC3 being high and the dot generator disabled. Through a process to be described later, one or more of the flip flops is set each time a key is struck. The resulting lows on the flip flops cause the outputs of one or both sections of IC5 to change state and, in turn, pin 1 of IC4 and pins 8 and 6 of IC3, thus starting the dot generator. If pin 5 of IC9 goes low and the Q output of any other flip flop also goes low (rule 2), pin 10 of IC4 will go high, and a dash will be generated; otherwise a dot will be formed. The dot or dash causes pin 4 of IC4 to go from a high to a low. This pin is connected to the clock inputs (pins 3 and 11) of the shift register flip flops, but a high-to-low transition does not affect a "D" type flip flop. However, when the dot or dash is completed, pin 4 of IC4 again goes high, and the low-to-high transition does clock all of the flip flops causing a right shift. That is, the Q output of each flip flop assumes the logic state that its left-hand neighbor had before the clock pulse. The resulting new set of Q outputs now initiates another dot or dash which, in turn, produces another clock pulse to shift the register to the right again, and so on until only the output of FF1 is low. This is the condition (according to rule 3) to generate a silent dash. What actually happens here is that FF1 turns on the dot generator, but since the other flip flop outputs are all high, pin 1 of IC4 is high and provides the output inhibit signal to pin 12 of IC4. Note that the silent dash creates another clock pulse that shifts the "1" output of FF2 into FF1, thus ending the character cycle and restoring the static condition.

In addition to starting and stopping the dot generator, pin 6 of IC3 also activates the gate of the SCR that provides current drive to the keyboard encoder circuitry. Therefore, the keyboard is locked out during character generation, but is automatically re-enabled as soon as the character is completed. This feature also provides automatic character repeat: A character is repeated, with 3-dot-length spaces between, as long as a key is held down.

This is a fine operating feature for sending words with double "o"s and double "l"s, etc., but is not so hot for sending double "e"s at high speed. If desired, automatic repeat can be disabled by reducing the drive on the SCR.

Note the "continuous dot" key connected between pin 1 of IC4 and ground (this is the switch labeled "DOTS" in Fig. 2). This is depressed and held down while adjusting the SPEED control to initially set the keyer to the desired code speed. The continuous string of dots resulting from holding down this switch represents the maximum sending speed for a given SPEED control setting. Holding down the "E" key also produces a string of dots, but with 3-dot-length spaces between each one.

Keyboard Encoding Matrix

Toroidal core transformers, driven by an SCR, are used for encoding keyboard contact closures to set the shift register flip flops in accordance with the Character Generation Table. These transformers are made by winding 10 turns of #30 enameled wire around half inch diameter powdered ferrite cores. The windings are equally spaced around the circumference of each core, but the spacing is not at all critical (see Fig. 4). Only cores with high permeability, such as those in the Parts List, should be used. The "one turn primary" of the transformer is simply a length of the same type of wire passed through the center of the cores appropriate to the character to be formed (per the Character Generation Table). One end of this primary is soldered to the keyboard contact of a given character, and the other end to the cathode of the SCR. There is, of course, one such primary for each of the 44 CW characters in the table, and several pass through each core. With #30 wire the cores don't get too crowded, and there is no effect on the cores by wires that pass around the cores but don't go through them (see close-up photo of the logic board, Fig. 5).

One end of the secondary winding of each transformer is connected directly to Keycoder's +5 V dc regulated power supply, and the other end to the "Clear" terminal of each shift register flip flop. When the SCR fires, a high current pulse passes through the one turn primary connected to the key pressed. This pulse induces a very short duration high voltage (up to 15 V) pulse in the secondaries of the cores it passes through. These pulses are polarized in opposition to the +5 V applied to the secondaries and drive them to ground potential, thus setting the flip flops to which they are connected. The resistor across each secondary is for loading to suppress transients, and probably wouldn't really be needed (but is cheap insurance). Its value isn't critical. The diode in parallel with the resistor clamps the voltage to +5 V to prevent possible damage to the flip flop from too high a voltage spike. This probably isn't actually required either, but W9UBA and WA9VGS are cautious fellows. The diode in series with the clamping diode to ground prevents the flip flop "Clear" from being driven below ground (negative voltages should never be applied to TTL ICs).

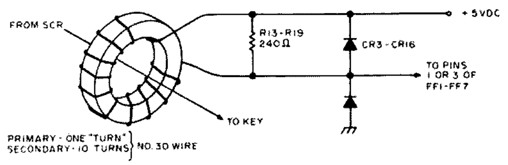

Fig. 4. Toroidal core transformers used for encoding.

The SCR circuit works like this: C4 is charged up to the power supply voltage through R8. The gate of the SCR is open since pin 6 of IC3 is high, but current cannot pass because the keyboard key is open, breaking the cathode connection to ground. When a key is struck, the circuit is complete and C4 discharges almost instantaneously (the actual discharge time depends upon the time constant of C4-R8). This discharge produces the high current pulse to fire the core secondaries and set the flip flops. The instant a flip flop is set, pin 6 of IC3 goes low, closing the SCR gate, and C4 begins to recharge for the next character. The closed gate ensures that the keyboard is locked out until the character being generated is completed and IC3 pin 6 goes high again. C3 is simply a filter capacitor to prevent transients from triggering the SCR.

Monitor

IC2 is also a 555 IC timer connected as a triggered multivibrator. The bias components used in the dot generator are not necessary here since the IC is oscillating at audio frequencies. None of the R or C values are critical and can be chosen to suit your preferences or what you have available. With those shown, the monitor produces

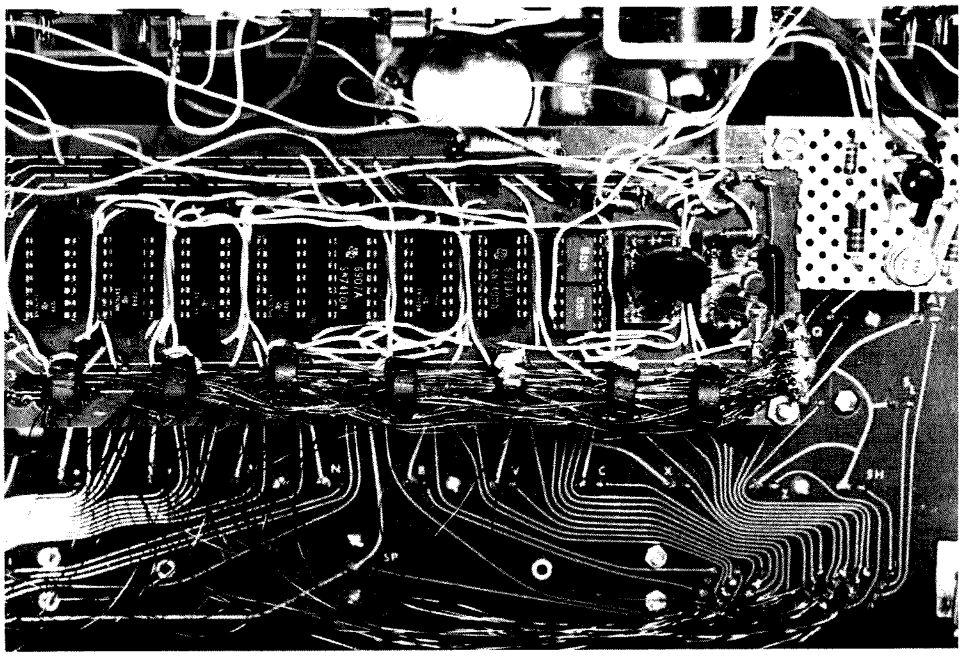

Fig. 5. Close-up view of the logic board.

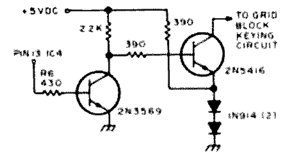

Fig. 6. Transistor keying circuit for Keycoder I.

tones from about 50 Hz to several thousand Hz, adjustable by R11. Of course R11 can be a fixed resistor if you'll settle for a single tone. C6 and R12 form the simple but adequate volume control. When set at its low end, R12 completely silences the monitor, and at the high end the IC will drive a 2"-4" speaker to a volume adequate for a medium-sized room. In the dot generator, the "Reset" terminal (pin 4) was tied to +5 V dc and the IC was triggered on and off via pin 2. In the monitor, however, we switch IC2 on and off via pin 4, since our driving signal (pin 13 of IC4) is low in the off state and high in the on state.

If Keycoder I is to be used exclusively with rigs that have a sidetone, obviously the monitor could be eliminated completely, but for the small number of components involved it's nice to have the unit completely self-contained for code practice without connection to a rig.

Output Circuit

The TTL output of Keycoder I can be used to drive either a keying relay, as shown in Fig. 3, or a PNP power transistor, if you can find one with ratings adequate for the keying circuit of your rig. (We found such transistors very hard to find; W9TO very kindly provided a list of suitable transistors, with their voltage ratings, which is appended to the Parts List.)

In the relay circuit shown in Fig. 3, Q1 can be any small NPN audio transistor (I used a HEP 728 with R6 = 2200 Ohms). The value of R6 can be changed to optimize the base drive if you substitute for Q1. For K1 I used a Griggsby-Barton 831C-2, which is packaged in a 14-pin DIP package and includes a protective diode (CR2). This relay is both small and completely silent, but is relatively expensive (about $5), and its contacts will only handle about 125 mW. However, this was adequate to key my Kenwood TS-520 transceiver (keying current 10 mA at 12 V). A better choice would be a surplus reed relay, such as listed in the Parts List. These are quite inexpensive (2/$1), and will handle 500 mA or better. W9UBA has used one of these relays to key his Drake T4X transmitter, Hallicrafters SR160, and several Heathkit rigs, without any difficulty.

C2 and RFC1 are for filtering any rf out of your rig's keying circuit line, and may or may not be needed depending upon how "clean" your rig is. Without either filtering component in the circuit I "froze" the contacts of one IC relay after several hours of troublefree sending, but have piled up several dozen operating hours without any relay problems after adding C2 (I still have no choke in the keying line).

Fig. 6 shows the circuit for transistor keying. Again, Q1 can be any NPN audio transistor. W9UBA has both a reed relay and the transistor shown in Fig. 6 connected in parallel in the output of his keyer, and switches back and forth between the two. Most of his on-the-air contacts have reported no discernible difference between the relay and transistor keying.

Construction

The keyboard unit is enclosed in a rugged and handsome case that is spacious enough for all of Keycoder's component parts. It was obtained from Meshna Electronics (#SP-153-L) for $35, plus shipping charges on 7 lbs. from Lynn, Mass. It is built on a heavy cast iron frame, and is trimmed in leatherette and imitation walnut grain sheet metal. The keys are magnetic reed type, very smooth, with about 3/16" travel. An added bonus in this assembly is the 10 rectangular switch positions (as seen in Fig. 1). Five of these are dummies – the plastic switch caps are in place but there is no switch beneath them – and I removed them and used the space for mounting 3 control pots (Fig. 2). Four of the other 5 switches are momentary action DPDT switches, and the fifth (labeled "PWR" in Fig. 2) is a DPDT Push-On/Push-Off switch. The two switches on the extreme right have screw-base "grain-of-wheat" light bulbs installed in sockets inside the translucent caps. I wired one of these, through a 20 Ohm, 1 Watt dropping resistor and the second set of "PWR" switch contacts to the power supply, to serve as an on-off indicator. W9UBA accomplished the same purpose by installing a red LED in a hole drilled in one of the switch caps (Fig. 1). There are also plenty of unused key positions on the keyboard (SPST), so you should be able to mechanize any control setup you like without additional switches.

There is a diode matrix circuit board just beneath the bottom cover of the key-

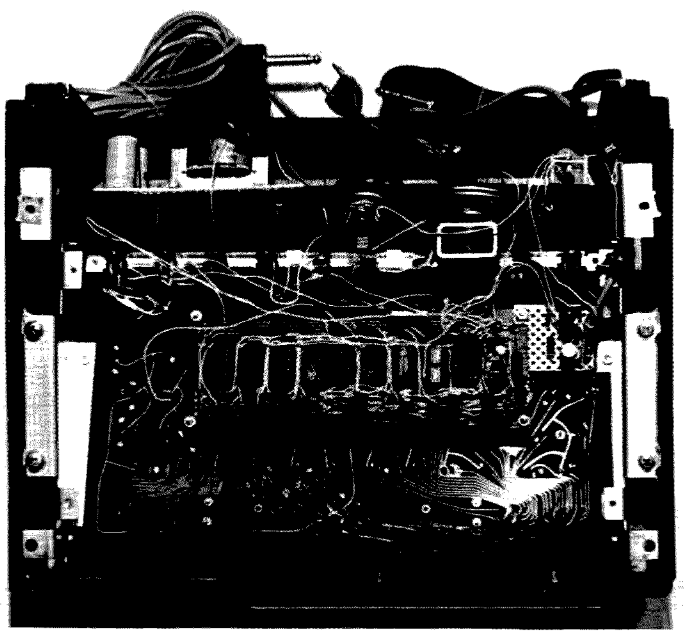

Fig. 7. Interior of W9UBA's Keycoder I.

board case. This board contains about 160 diodes and several dozen 33k resistors that can be added to your junk box (although the leads are awfully short). This board is attached to the case with a couple of screws and two multiple-lead ribbon cables that are easily removed. Beneath this discarded diode board is the key contact board, with all of the key contacts nicely labeled. Half of the foil patterns from the key contacts go to solder terminals grouped together at the bottom left-hand side of the board, and half lead to similar terminals at the bottom right. I soldered the core primary wires directly to the key contacts wherever they were on the board, while W9UBA made these connections to the bottom sets of terminals, resulting in shorter wire runs and a neater appearance (see Fig. 7).

The 9 integrated circuits, the SCR, and their associated discretes were all mounted in DIP sockets on a Radio Shack Universal Display Board (P/N 277-108). This board is predrilled for 10 14-pin DIPs, and etched with solder pads for the DIP connections and 8 separate buses running the length of the board, 4 on each side of the DIP patterns. These buses were used for +5 V dc, ground, SCR common, and the flip flop clock line. We both used #22 hookup wire for all connections; W9UBA ran his wires on the top side of the board while I made most of my connections on the foil side. Either way, this board saves a lot of building time compared with vectorboard construction or laying out and etching a PC board. The board measures about 2½" x 6¾" and costs $3.

Since the 555 ICs have only 8 pins, both of them can be mounted in one 16-pin socket; the leftover sockets can then be used for mounting the SCR and 555 discretes. The toroidal core transformers and their diodes and resistors are also mounted on the board, beneath the row of ICs (as seen in Fig. 5). The cores are wound and soldered into the circuit, but the leads are left about ¾" long. Any one of the primary wires connected to the SCR is then strung through each core before it is mounted and the wire is grounded; if nothing happens, the core polarity is incorrect and the long leads permit it to be turned 180°. When a core is operating correctly, it is glued to the board with a drop of Duco cement. Stringing the primary wires through the cores will be easier if the cores are mounted so that their openings are in a reasonably straight line.

The values of R7-C3 and R8-C4 required some juggling to get reliable SCR operation. The most severe test of SCR and core operation is generating the figure "0", since 6 flip flops have to be set simultaneously to produce this character. If you have difficulty generating "0"s, or with repeat operation, vary the values of the above components, and/or try connecting R8 to the unregulated output of the power supply to get a higher voltage and hence more current.

All the integrated circuits were bypassed with .01 uF disc capacitors from +5 V dc to ground, at the buses right opposite each IC. These capacitors are visible at the top of the board in Fig. 5. In addition, each side of the power supply transformer primary is bypassed to ground with .001, 400 volt capacitors. The all-metal, completely enclosed keyboard case provides good shielding and also contributes to the lack of rf interference.

Fig. 3 does not show the power supply, since the keyer's power requirements are reasonably uncritical and the builder will probably wish to fabricate his supply with whatever parts he has available. The Keycoder draws about 100-125 mA and the +5 V should, of course, be regulated. We decided to build our supply based on the Radio Shack 5 Volt Regulated Power Supply PC board (P/N 277-102, price $1.49). This board measures only 1¾" x 3¾", and can accommodate whatever parts you have or whatever circuit variations you wish to make. Fig. 8 is a schematic of the power supply with the parts values as specified by Radio Shack. In this configuration, the supply is rated at 1 A. The power supply is mounted in the upper left-hand corner of the case in W9UBA's unit, as shown in Fig. 7.

Parts List

IC1-IC2	555 Integrated Circuit Timer
IC3	Quad 2-input NAND gate (SN 7400)
IC4	Quad 2-input NOR gate (SN 7402)
IC5	Triple 3-input NAND gate (SN 7410)
IC6-IC9	Dual "D" Flip Flop (SN 7474)
SCR	2N889, or equivalent
Q1	2N3569, HEP 728, or equiv. NPN audio transistor
Q2	2N5416 PNP high voltage transistor, or equiv. (see accompanying table)
CR1-CR16	1N914 switching diode, or equivalent
C1	3 uF, 15 V electrolytic capacitor
C2	0.005 uF, 200 V capacitor
C3	0.022 uF, 15 V capacitor
C4	1.5 uF, 15 V electrolytic capacitor
C5	0.01 uF, 15 V capacitor
C6	8 uF, 15 V electrolytic capacitor
R1	1.2k, ¼ W resistor
R2	15k miniature potentiometer, audio taper
R3	10k, ¼ W resistor
R4	51k, ¼ W resistor
R5	47k, ¼ W resistor
R6	430 Ohm, ¼ W resistor
R7	600 Ohm, ¼ W resistor
R8	10k, ¼ W resistor
R9	1k, ¼ W resistor
R10	10k, ¼ W resistor
R11	100k miniature potentiometer, audio taper
R12	500 Ohm miniature potentiometer, audio taper
R13-R19	240 Ohm, ¼ W resistor
RFC1	2.5 mH rf choke
Reed Relay	Meshna Electronics #SP-37A, SPST ½ A contacts, 3-6 V coil
Toroids (7 required)	Order from Amidon Associates, 12033 Otsego St., No. Hollywood CA 91607

High Voltage PNP Transistors for Keying Service

Number	Vcbo
2N398A*	105
2N1275	100
2N1476	100
2N1654	100
2N1655	125
2N1656	125
2N2042A*	105
2N2043A*	105
2N2551	150
2N2590	100
2N2591	100
2N2598	125
2N2599A	125
2N2600A	125
2N3062	90
2N3063	90
2N3064	110
2N3065	110
2N3224	100
2N3413	150
2N3495	120
2N3497	120
2N3841	100
2N3842	120
2N3930	180
2N4028	100
2N4357	240
2N4888	150
2N4889	150
2N5400	130
2N5401	160
2N5415*	200
2N5416*	350
2SA305	125
2SA429	150
2SA510	110
2SA511	90
2SA516A	120
2SA637	150
2SA639	180
2SA685	150

*Germanium transistors, all others silicon.

Referring again to Fig. 7, the output transistor and its driver and associated resistors are mounted on a scrap of vectorboard just to the right of the logic board, and the reed relay is just above the vectorboard, mounted to a partition added to the enclosure. The monitor speaker is mounted on the other side of this partition (beneath and to the left of the relay).

The volume, tone, and speed control potentiometers have to be miniature types if they are to fit in the area shown in Fig. 2. The pots are mounted to a small piece of thin aluminum sheet, which is held firmly in place when fitted between the keyboard assembly and the outer case. W9UBA used full-sized pots mounted under the row of keyboard switches, as shown in Fig. 1. Also note in this photo the sub-miniature thumbwheel type pot mounted in a rectangular hole cut in the switch cap (extreme left-hand one).

The speed control range can be increased at either the low speed end or the high speed end, or both (by altering the values of R1-R3 and C1), but resolution will become poor if too large a speed range is attempted, and it will be difficult to accurately repeat a given speed setting. Two switch-selected pots could probably be used to obtain a greater range of speeds without sacrificing resolution. Audio taper pots should be used for speed, tone, and volume control.

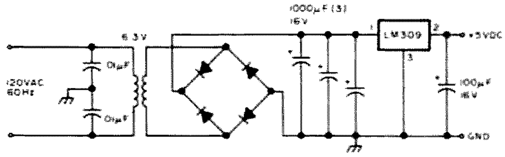

Fig. 8. Schematic of +5 V dc regulated power supply.

Operation

Both W9UBA and I have had several compliments on having a "gud fist" before informing our contacts that we were using a keyboard keyer. More important, we estimate that our CW speed increased 5-10 wpm within 3 weeks after having our Keycoders on the air. We believe this is due, in part, to hearing perfect code as we are sending, and in part to the natural tendency to send faster, since it's so easy (thus unintentionally inviting a higher speed QSO).

It takes very little practice to get the rhythm of typing on a keyboard keyer, and you don't have to be a good typist. Once you know where the characters are on the keyboard, 20 wpm seems incredibly slow, even for a "hunt-and-peck" typist. A good typist must learn to allow enough time for long letters, such as "q" and "y", to be completed before hitting the next key, and a shorter time for letters like "e" and "i", but with just a little solo practice you'll be ready to go on the air. It was originally thought that a 2 or 3 character memory, and/or a space bar mechanization, would be added to Keycoder I, but operation without these features has been so good that it has been decided to forego this additional circuitry.

In addition to W9UBA's design work, moral support, encouragement, and help with parts procurement, the assistance of three others should be acknowledged: James D. Stenseth K9CML (Franklin WI) and Mr. Ray Young both helped with design details, and on-the-air contacts and letters from W9TO were much appreciated. ■

Jim Huffman WA7SCB
P.O. Box 357
Provo UT 84601

The Mini-Mite Allband QRP Rig

--runs a mighty seven Watts

Operating QRP is fun. Operating portable is fun But, operating QRP with the kind of inefficient antenna systems sometimes encountered in portable operation is no fun at all. Sure, with a good matchbox, you can load a barbwire fence, or a set of bedsprings, but those aren't the best radiators in the world, and the puny little 100 mW QRP rigs will have a hard time getting across the street. While facing this dilemma, I decided someone should invent the perfect QRP rig, one that is small enough to be super-portable, low powered enough to run off a lantern battery, and gutsy enough to make some noise across town into the

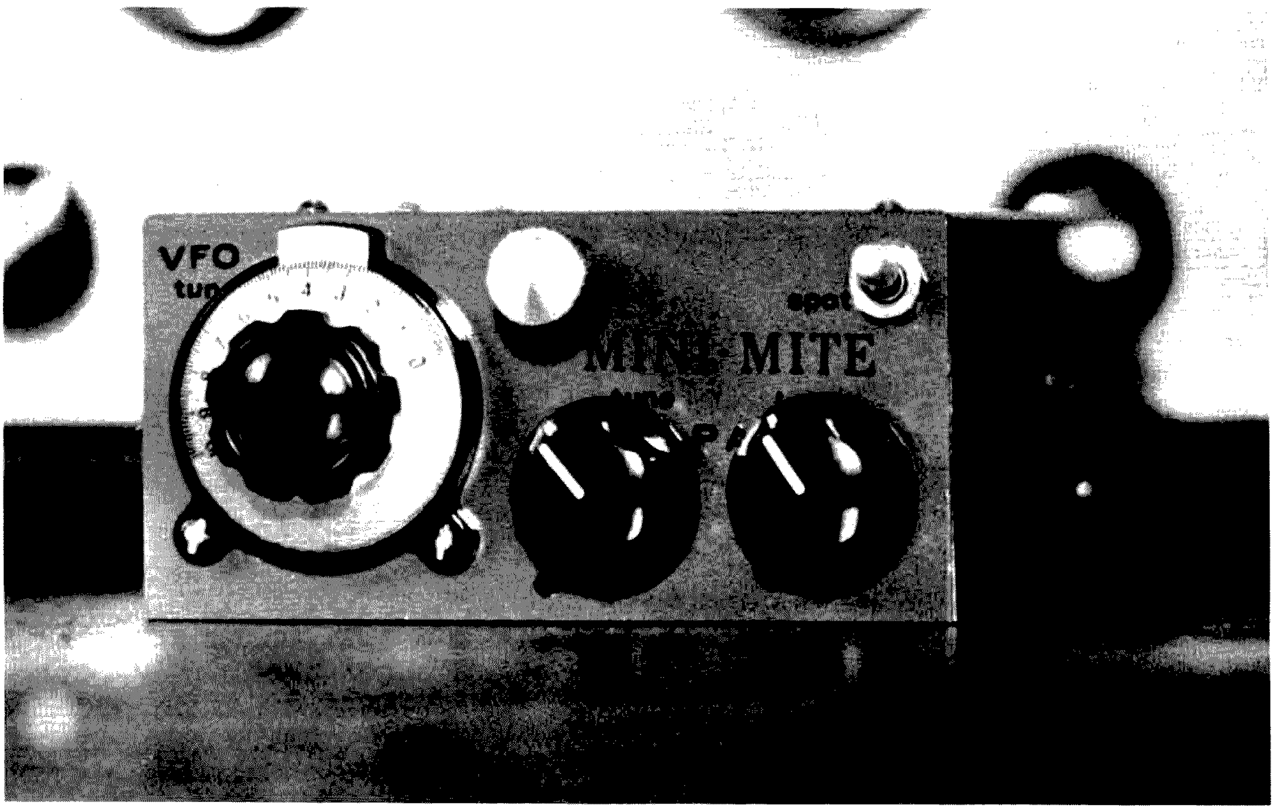

The Mini-Mite, a "kilowatt" among QRP rigs, runs 7 Watts peak power for cutting through the QRM and clearing the frequency for the little QRP rigs.

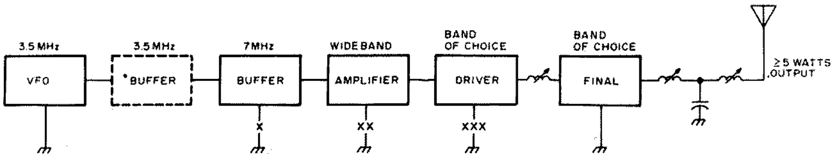

*Fig. 1. Block Diagram. The Driver and Final stage tuned circuits are selected for the band of your choice. Note they operate straight through on all bands for maximum efficiency. *This buffer is optional; it may be added to reduce vfo pulling — this is especially helpful when the unit is used with break-in keying. The keying points (shown by "X") have various advantages and disadvantages. See the text for a complete discussion.*

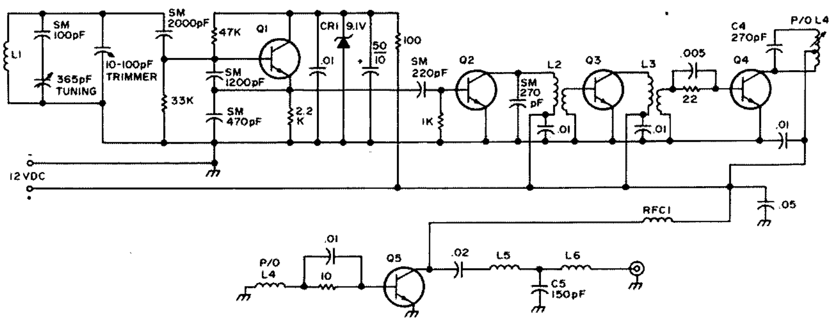

Fig. 2. Schematic Diagram. Coils are discussed in the text. All values in pF unlesss otherwise stated. Resistors are given in Ohms and are all ½ Watt carbon types.

average portable antenna.

Since I am the only inventor I know, I had to call upon myself to come up with this "wonder-rig." And (if I do say so myself) I did a pretty good job. The final outgrowth of the requirements is a muscle-powered mini-watter I call the "Mini-Mite." Now you can build yourself a Mini-Mite for less than twenty dollars. It is the perfect Novice rig with its 7 Watts dc input; it is the perfect standby rig for the oldtimers; and darned if it's not the answer to the QRP nut's portable operating dreams. The rig is vfo controlled (why be old-fashioned?), it runs a solid five Watts, can be held in one hand, and has a complement of controls you would expect to find only on more expensive rigs. You can build it for any or all the bands of your choice, 80-10 meters. And, finally, if you insist on staying around the one Watt level with your QRPing, you can leave out the final for a dandy low-power "low power" transmitter.

Fig. 1 is a block diagram of the Mini-Mite. The rig is pretty straightforward as far as using conventional circuits. Once you are into the schematic you will see some unique features that save space and money in the rig. The vfo circuit is very stable and you have a choice as to using a bipolar vfo or an FET vfo (schematics for both are given). The buffer shown in dotted lines is optional; it provides greater immunity to pulling as the rig is tuned and keyed. This option is a must for the operator who wants "everything" in his rig, or who is interested in using break-in operation. The buffer stage (solid lines) uses a broad-tuned low Q circuit which resonates at 7 MHz, but passes sufficient 80 meter signal to allow the rig to operate multi-band. The buffer operates class A and runs at fairly low power. The amplifier stage is a wideband outfit which delivers the first real power in the rig; you could use the amplifier output as a transmitter output, except that it is rich in harmonics. The driver serves two purposes; one, of course, is to provide power drive for the final. The other use for the driver is to select the harmonic of the vfo signal that will be used to transmit. The driver tuned circuit is comparatively medium Q. The driver tuned circuit alone does not provide adequate harmonic attenuation, so if you decide to build the "QRP" Mini-Mite you may leave out the final stage, but you must keep the final tuned circuit because it provides the necessary harmonic rejection. For normal QRP "plus" operation the driver feeds the final which in turn generates the so-called high-power output signal. The final output circuit is one of those unique circuits I mentioned, it uses slug-tuned forms to provide the tune and load controls. The output will easily load into 50-70 Ohms and a little more. Harmonic output at the final is very low and when the rig is properly tuned the output signal is very clean.

Fig. 2 is the schematic of the complete Mini-Mite. Some of the interesting features are the coils. You may pillage the junkbox to see what you have, or you may buy three sets of the units given in the parts list. For the vfo coil, L1, the buffer coil L2, and the rather unique output transformer L3, you use only the slug from a coil. You do not use the coil form itself. Coils L4, L5 and L6 use the complete slug-tuned form as these three coils are tuneable and must have some means of adjustment.

Construction

I am the biggest booster of perfboard construction when only one of anything is built, although the photos show a printed circuit board for building more than one of the units. The coils are available from Radio Shack and are sold two to a package at slightly over a buck.

The vfo in the pictures uses an Amidon T92 toroidal coil, but other units have been

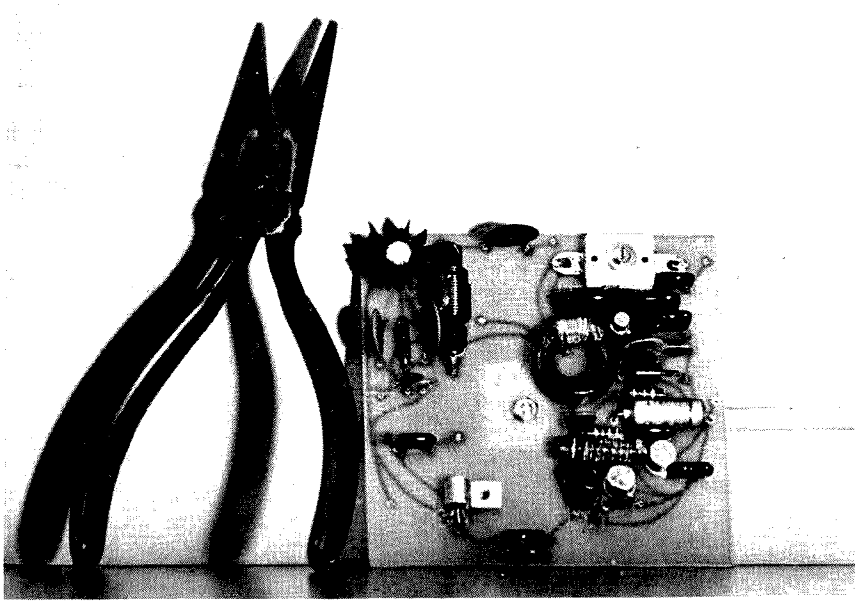

Here is the Mini-Mite PC board.

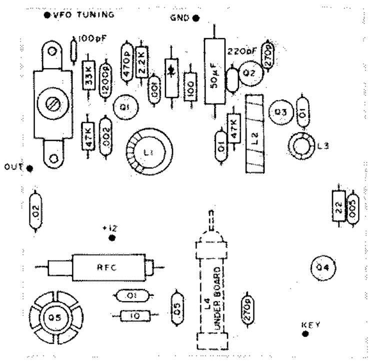

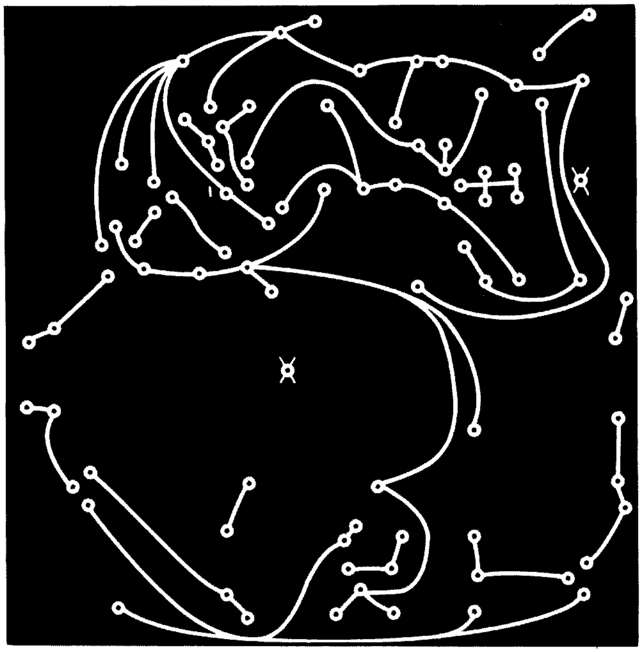

Fig. 3. PC board layout, top and bottom views.

built using the slug as described and they offered comparable performance. Although you could construct the vfo in a separate shielded box, it is provided for right on the PC board. Fig. 4 gives the schematic for the alternate FET vfo. Both vfos tune with a 365 pF tuning capacitor and use a 100 pF fixed capacitor in series to limit the tuning range. Vfo tuning is linear for the bottom 100-200 kHz of the band and then becomes non-linear (but usable) over the remaining portion. This is generally acceptable, since most people will just put the linear portion in their favorite part of the band anyway. The FET vfo will provide more stability than the bipolar unit, but it will run the cost of the rig up a little since the same transistor that is used in the vfo can also be used as the buffer, amplifier and driver stage. Also, you may get slightly less drive to the buffer using the FET.

The buffer stage provides a compromise between actually isolating the oscillator and giving a little power output. That's why there is an alternate buffer, to provide isolation and little or no gain. Fig. 5 shows the alternate buffer; the circuit uses no tuned circuits and is merely stolen from the Radio Amateur's Handbook. The Mini-Mite buffer is straightforward and uses the slug form previously described (and as can be seen in the photos). It should resonate around 7 MHz if you want to check your work with a grid dip meter. The windings are wide-spaced along the entire slug, not wound closely together. Hold the windings in place with a little Q dope, or equivalent. The output link is wound on the cold end (Vcc side) of the coil and provides impedance matching for the amplifier stage.

The amplifier runs class B and there are no biasing resistors to worry about. It is very simple: The input goes on the base, the emitter is grounded, and the collector gets +12 through the output transformer L3. L3 is left untuned and serves to couple wide-band, harmonic loaded output to the driver stage. The transformer itself is a twist on the toroid. It is fabricated from a high-permeability coil slug that has a hole all the way through it. Either grab one from the junk box, or drill a hole (lengthwise) the rest of the way through the Radio Shack slug after the tuning screw is removed. This stage provides enough power to dimly light a #47 bulb connected across the secondary. The power is to put some kick in the driver stage and if not for all the harmonics, you could use this output for a QRP transmitter all by itself.

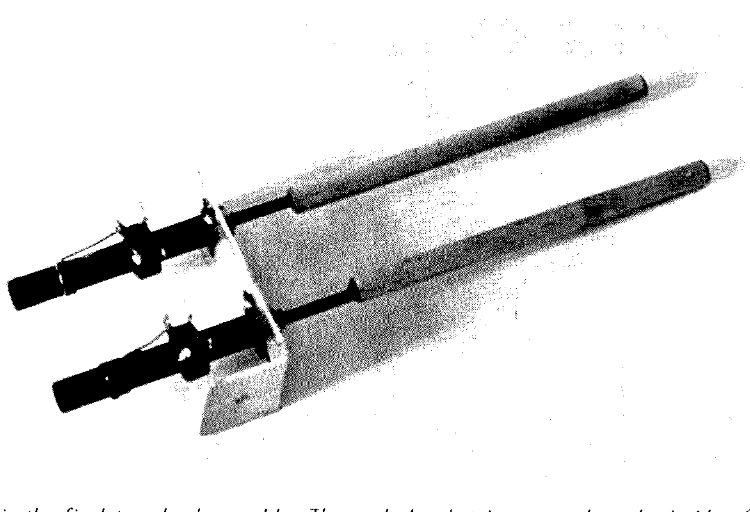

Here is the final tune-load assembly. The angle bracket is mounted to the inside of the cabinet and the wooden dowels serve as tuning shafts to the front panel.

Harmonics are taken care of in the driver to a great extent. The higher power drive from the amplifier is used to drive the driver into class C for most efficient operation. When the driver operates, current flows through the 22 Ohm resistor, setting up a reverse bias that causes the stage to operate class C. The resistor is bypassed for the ac signal. The tuned circuit in the driver is close to that in the buffer, except that the coil is tapped to yield a higher Q with the higher power output. Harmonics at this stage are nothing like at the amplifier stage, but to use this stage as the QRP rig, you will have to couple the output tank circuit to get an acceptable signal. The tuning of the driver coil is accomplished by a wooden dowel shaft extension. The dowel should be approximately 4½ inches long to reach the front panel from its position under the PC board. As can be seen in the photos, the coil mounts on the PC board directly. An angle bracket is satisfactory mounting.

The final stage will run a theoretical 7 Watts dc input. The output circuit is a "T" network with slug-tuned coils used as the output tuning and loading controls. The final output transistor is rather expensive, but is hardy and generally works well in

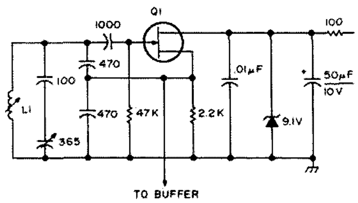

Fig. 4. Alternate FET vfo. Capacitors and resistors in pF and Ohms unless otherwise stated.

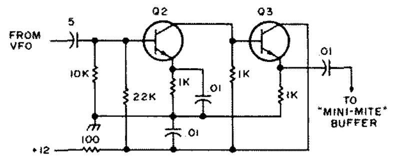

Fig. 5. The optional buffer is used in conjunction with buffer in transmitter to provide better isolation for break-in operation or for when some pulling of the vfo cannot be tolerated.

Coil /Cap	Band	80	40	20	15	10
L1		16t#28E (13t on toroid)	X	X	X	X
L2		X	8t#28E widespaced 5t link	X	X	X
L3		7t#28E 3t link	Same	Same	Same	Same
L4		30t#28E 10t link	15t#28E 5t link	8t#28E 4t link	5t#28E 3t link	4t#18E 2t link
C4		470 pF	270 pF	150pF	100 pF	68 pF
L5		25t#28E	13t#28E	7t#28E	4t#28E	3t#18E
C5		300 pF	150 pF	75 pF	50 pF	37 pF
L6		35t#28E	21t#28E	10t#28E	7t#28E	5t#18E

Table 1. Coil/capacitor data (final values will need trimming).

these applications. It will operate at frequencies in excess of the 30 MHz encountered in the 10 meter version of the Mini-Mite, so it is a pretty good choice until research proves the existence of a better all-around transistor. The rf choke used in the final is a high-current jobby. A conventional rfc has too much dc resistance and limits the output power stage can run. Wind forty turns #18 en. close and in 2½ layers directly on one of those slugs.

Table 1 gives values for coils and capacitors to be used for multi-band operation. You may wish to switch in the coil/capacitor combinations, or do some experimenting with winding multiple coils on the same form. Some of the problems are that the coil/capacitor combinations are sympathetic to harmonics and you may get false loading. But, as long as the Q is high enough, you could make each band peak at some different setting of the slug in the coil form. This helps eliminate the problem. Also, remember to use shielded solenoid inductance formulas because the overlapping coils act as shields and change the normal calculations. The cost savings of this system would be significant. This could be our answer to the old familiar tapped coil setups in tube-type rigs.

The final tuning coils are mounted on a piece of angle aluminum as shown in the photos. Each slug-tuned coil has a wooden dowel extension approximately 3-3/4 inches long. The dowels used on all the tuning setups are standard 1/4 inch diameter units. They are epoxied to the tuning screws. When the coils are tuned to minimum inductance, the knobs stick out from the front panel a little way. You can build the unit, tune it, then cut off the dowels at the right approximate length to keep the knobs from sticking out too far.

Construction is not too critical. The Mini-Mite is built in a 6x4x2 inch chassis (LMB #642); you may add the bottom plate which is available for this chassis. The circuit board is a very tight fit in the box. In order to get the circuit board in, it will have to be slid into place before the tuning capacitor is mounted. Then push the circuit board back all the way against the back wall of the box. This should leave enough room to insert the tuning capacitor. Hold the capacitor in place by means of its mounting holes and screws, then slide the PC board forward into its mounting place. The PC board is held away from the chassis on 1/4 inch spacers. Mount the spacers in place, tighten nuts over the mounting screws, and then the PC board is slipped into position and more nuts are placed over the mounting screws. This allows you to remove the PC board without the hassle of always fumbling to find a way to hold the spacers in place while you stick the mounting screws through them and the PC board.

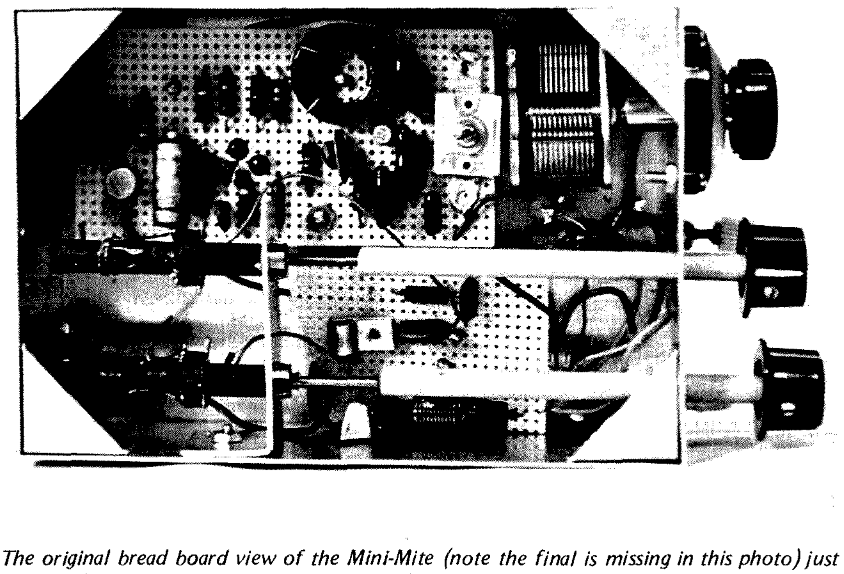

The original bread board view of the Mini-Mite (note the final is missing in this photo) just goes to show that layout is not critical, as this unit worked quite well. Also this prototype used the optional buffer — the two plastic-type transistors just behind the vfo.

Operation

Before you can begin to operate the Mini-Mite, you must provide for the type of keying scheme which will best serve you. For instance, you may wish to key the oscillator for break-in. Fig. 1 suggests some keying schemes. The PC board is set up for keying the driver and final simultaneously. To change from this requires some revision of the printed tracks. Keying the driver and final is convenient and easiest, but has one major disadvantage. Dirty key contacts will increase the chance that some voltage will be dropped across the closed contacts. At the higher current levels encountered at this

point, you can drop, say, a volt or so, and lose effective input power to the final and driver, and degrade the output signal. Keep the key contacts reasonably clean and you should have no particular problems. Tuning up the Mini-Mite is pretty much like tuning any other rig, except that you must also tune a solid state rig for cleanest output signal. You will have to monitor on a receiver as you tune up. You can use a #47 dummy load, but take care not to leave the key down for periods over a minute or so, as the overvoltage to the bulb will burn it out. Tuning to an antenna can be accomplished with a field strength meter, in-line wattmeter, swr bridge on forward power, or a tuning meter as shown in the schematic Fig. 6. Tune for maximum all the way around and you should get the cleanest signal.

Well, for just under twenty dollars, the Mini-Mite is going to make the Novice a fine first rig. Or it will serve the guy who operates portable for fun quite well because it has enough kick to cut through some of the QRM. It also makes a great standby rig for the day when that low band transceiver pops off the air and you would like to tell the guys in the group what happened without a long distance phone call. Usually, when guys are on frequency and looking for you anyway, they will hear a little peanut whistle QRP rig coming in, so you will be able to set 'em straight (if you can still remember the code). And if you're a General or Advanced who has only got a transceiver that won't go on CW, here's your gateway to 20 wpm! ■

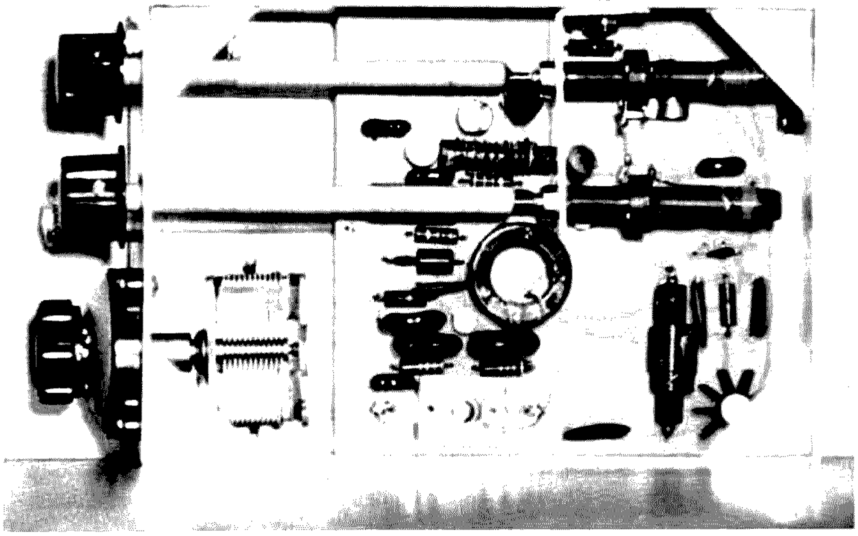

Here is the final version of the Mini-Mite component layout. The output transistor has a finned heat sink. The vfo is in the area shown with the toroidal coil although other coils may be used as discussed in the text.

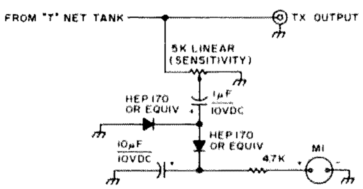

Fig. 6. Tuning meter. MI is a tuning indicator or battery level indicator available from many mail order houses or the XYL's cassette player.

Author's Note:

Add this modification (Fig. 7) to the Mini-Mite schematic. All it amounts to is adding a 100 Ohm resistor and a 1k resistor in the Buffer Amplifier. The 47k bias resistor is dropped so the stage runs class C.

The best way to run the rig as a 1 Watt output QRPer for anyone not interested in going the full 7 Watt route is shown in Fig. 8. Leave out the driver transistor and run a 100 pF between the output winding from the amp stage and the collector connection on the driver, then a 100 Ohm across the PA base to ground.

Parts List

Q1 2N709 or one of four Radio Shack 276-608
Q2 2N697 or one of above package
Q3 2N697 or one of above package
Q4 GE63 or one of same package
Q5 Motorola HEP53001
Coils (see text) Radio Shack 270-376
Tuning capacitor 365 pF Radio Shack 272-1344 or equiv.
Cabinet LMB 642 (6x4x2 aluminum)

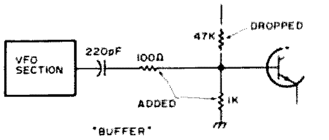

Fig. 7. Modification to the Mini-Mite.

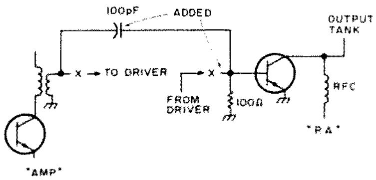

Fig. 8.

A Fun Counter Project

--an invaluable test instrument

for under $50?

Al Plavcan
PO Box 6173
Anaheim CA 92806

My original goal in designing this counter was to produce an inexpensive, no frills, reasonably accurate, minimum parts design. I think I accomplished this for the most part. Read on and see if you agree.

High impedance FET input, .2 to 30 MHz frequency range, sensitivity ≤ 60 mV RMS across most of its range, and compact packaging are some of its features. Also, two modes of timebase operation are possible: xtal controlled with an accuracy of ±20 PPM ±1 count and line frequency (±.05%). The heart of the counter (less readout and power supply) is mounted on 2 PC boards (≅ 3" x 5"). The cost of the boards filled with parts (for line frequency operation) plus the 6 Minitron readouts will run you about $40. An additional $8 pays for the xtal controlled timebase, and of course you'll need a power supply. Any junk box parts substitute will naturally reduce your costs.

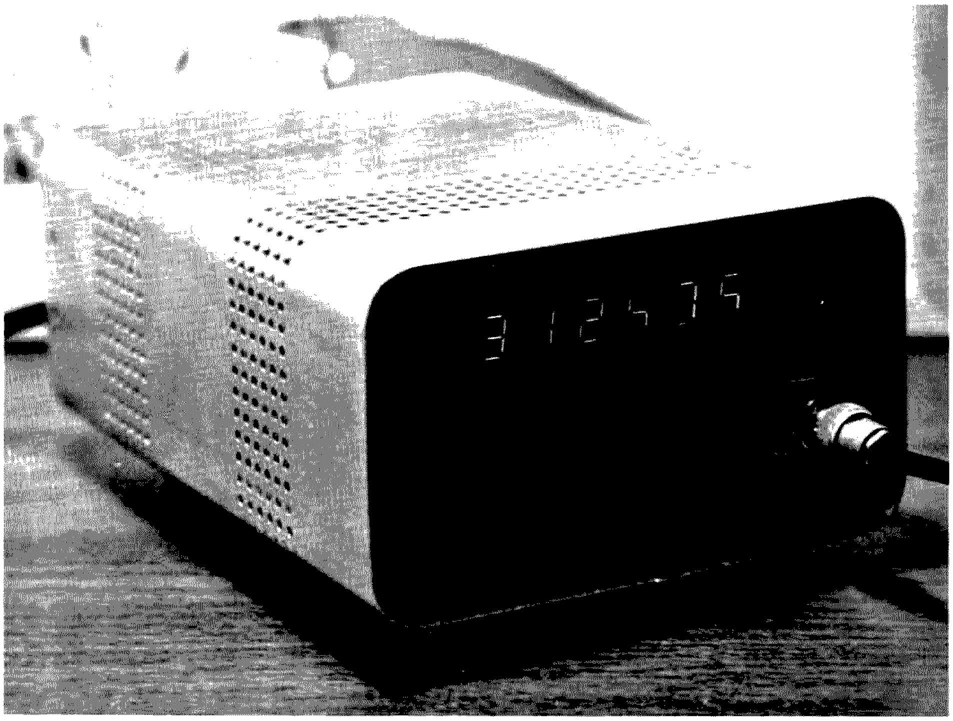

Operation

The block diagram of Fig. 1 shows the signal flow and control. Referring to Fig. 2, Q1 to Q4 shape the incoming signal to produce TTL compatible levels. A precise 100 ms gate (at IC19 pin 2) is then "or"ed together with the signal (IC19 pin 3). This gated signal is counted down and displayed on the readouts. The trailing edge of the 100 ms gate triggers the one shot IC24. A pulse is generated that strobes the quad latches IC7 to IC12. The stored data is transferred to

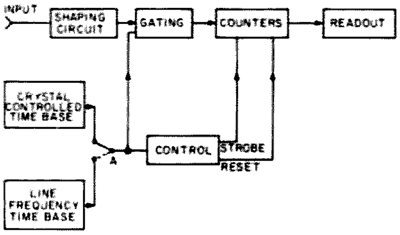

Fig. 1. Block diagram.

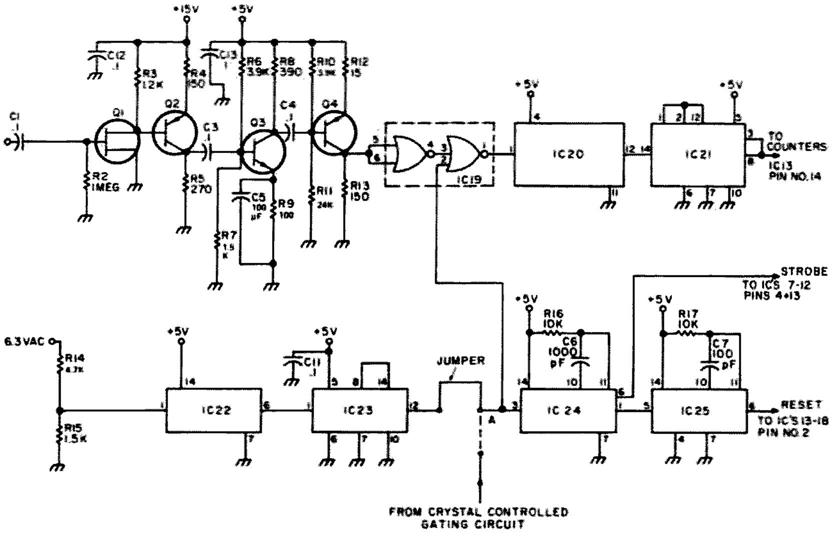

Fig. 2. Input and Control board.

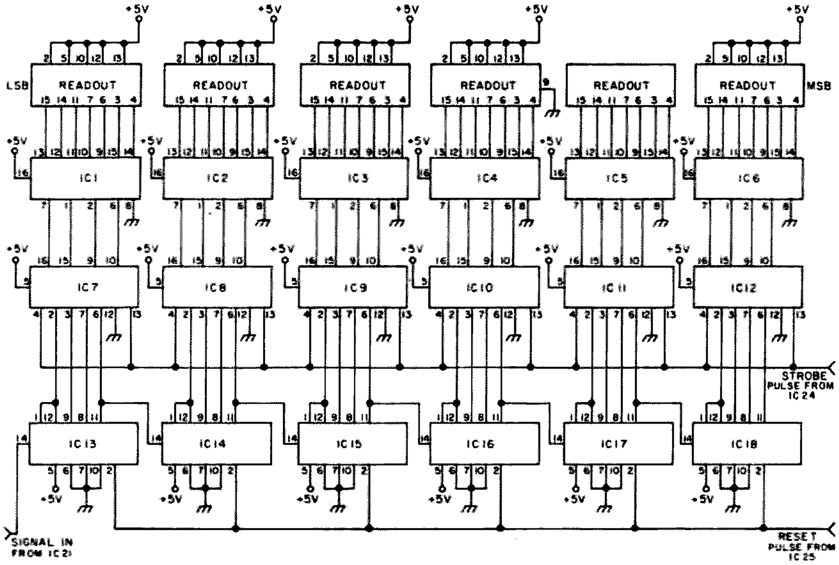

Fig. 3. Display board.

the decoders and readouts. The trailing edge of the one shot triggers another one shot IC25 to produce the reset pulse to counters IC13 to 18. All counters are reset to zero until the next gated input is counted. Thus the sequence is: gate, count, transfer, reset.

Construction

As mentioned earlier, the heart of the counter is mounted on 3" x 5" PC boards (actually 3" x 5-3/16"). You can package these boards any way you like. Just allow sufficient ventilation in any enclosure you use. One of the drawbacks of laying out small boards is that you can't get all the circuit connections on them that you'd like. So we're going to have to add some jumpers. Refer to Fig. 2 and Fig. 5. After all the components are mounted, jumper IC19 pin 2 to IC24 pin 3. Also jumper point "A" to the pad right above it (for line base operation). That's all the jumping we need for the Input and Control board.

The Readout board will require the following jumpers (refer to Fig. 3 and Fig. 6):

1. IC7 to 12 – jumper all pins 4 and 13 (strobe).
2. IC13 to 18 – jumper all pins 2 (reset).
3. IC13 to 18 – jumper pins 1 and 12 on each IC only.
4. IC13 pin 11 to IC14 pin 14.
5. IC14 pin 11 to IC15 pin 14.
6. IC15 pin 11 to IC16 pin 14.
7. IC16 pin 11 to IC17 pin 14.
8. IC17 pin 11 to IC18 pin 14.

Also, power to all ICs and all power grounds will have to be added. Refer to Fig. 3. Jumper grounds to the ground plane and between boards. I suggest you use Molex terminals to mount all ICs. The added cost is worth it.

The Input and Control board artwork (Fig. 5) is laid out for 60 Hz operation. If you're satisfied with an accuracy of approximately 500 PPM on your counter,

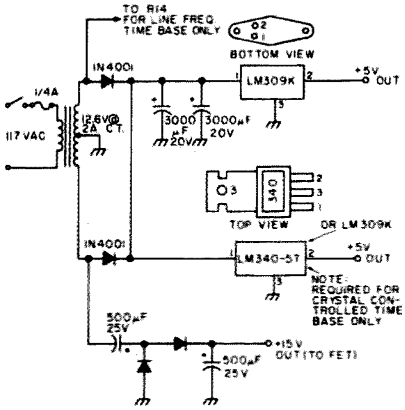

Fig. 4. Power supply.

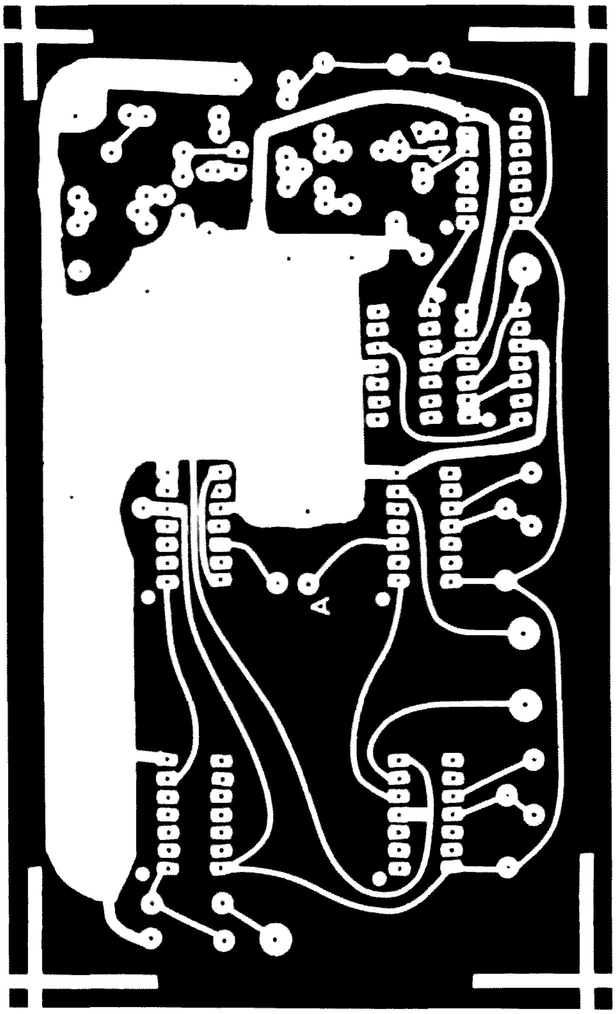

Fig. 5(a). Input and Control PC board, full size.

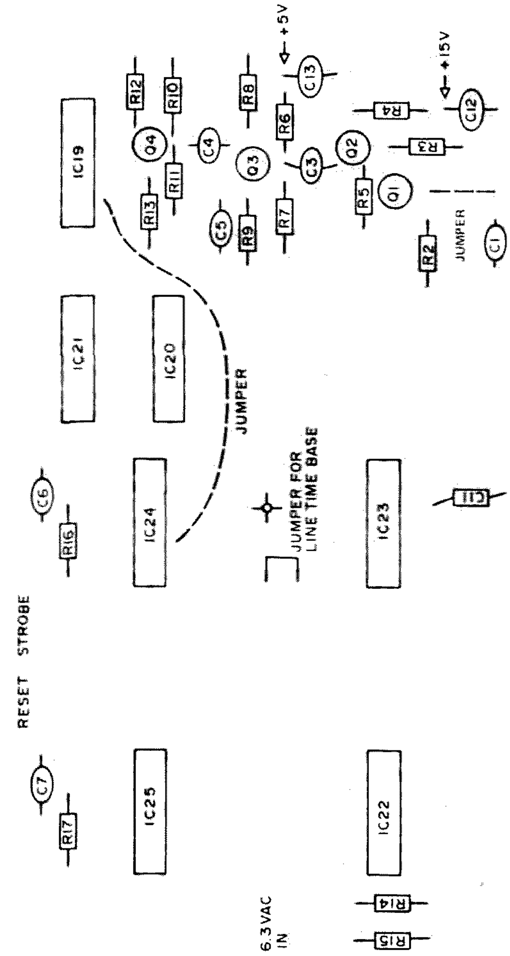

Fig. 5(b). Component layout, Input and Control board.

use it as is. You won't need the LM340-5T in the power supply, so that's an additional saving.

The crystal controlled timebase should be added to get the most accuracy from your counter. Fig. 7 is a suggested circuit. There is no artwork included for this additional circuitry. Layout is not critical and could be hand-wired in no time. If used, you won't need IC22 and IC23. To connect, remove the jumper at point "A" and connect the output on the last counter to point "A".

That's about it. If you got all the jumpers in right and your power is connected right (double check), you should be finished. The dot near each IC on the artwork is pin

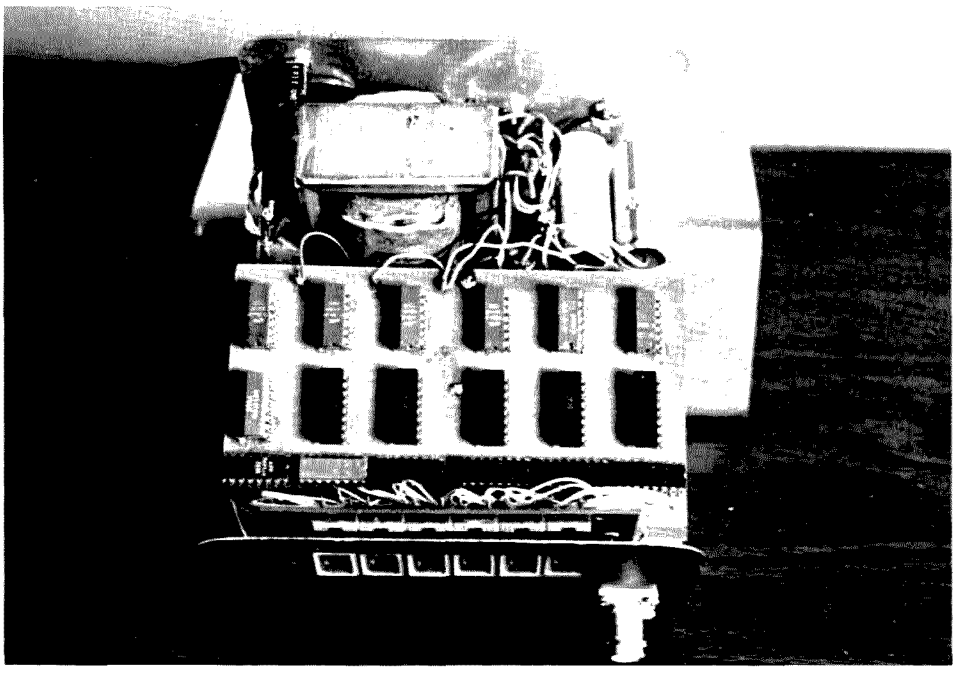

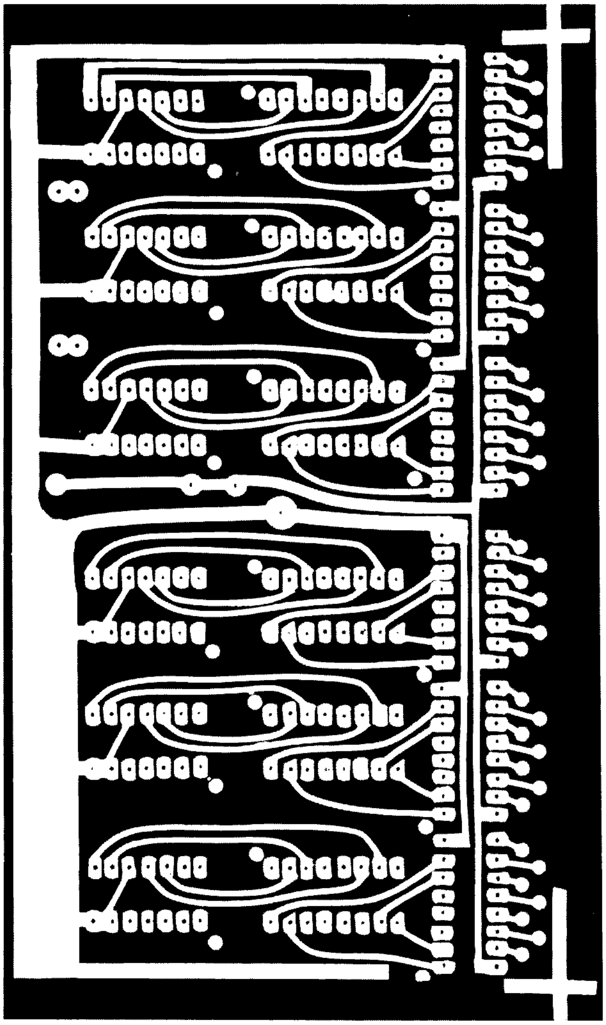

Fig. 6(a). Display PC board, full size.

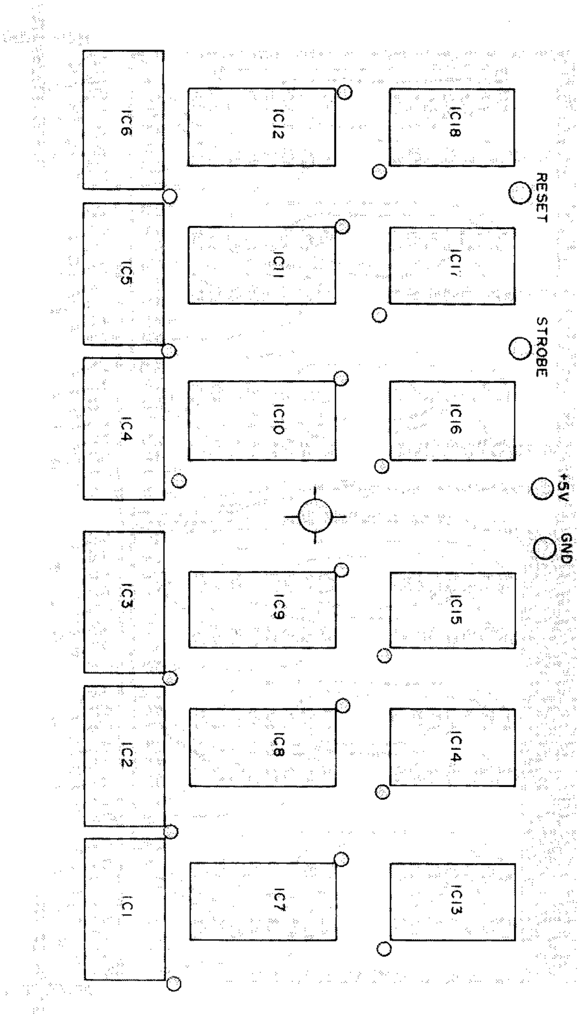

Fig. 6(b). Component layout, Display board.

1. Make sure all ICs are installed correctly. That's another reason for using the Molex terminals. It's a lot easier to reverse an incorrectly mounted IC with them.

There is no calibration procedure. If it's wired right, it'll work. One word of caution. If the counter fails to count all the way to 30 MHz, IC21 could be the cause. It has to divide by 5 up to 15 MHz. Substitute it with other 7490s until you get one that goes to 30 MHz on the input.

Finally, your counter is compatible with any of the prescalers available on the market, extending its range to 300 MHz. ■

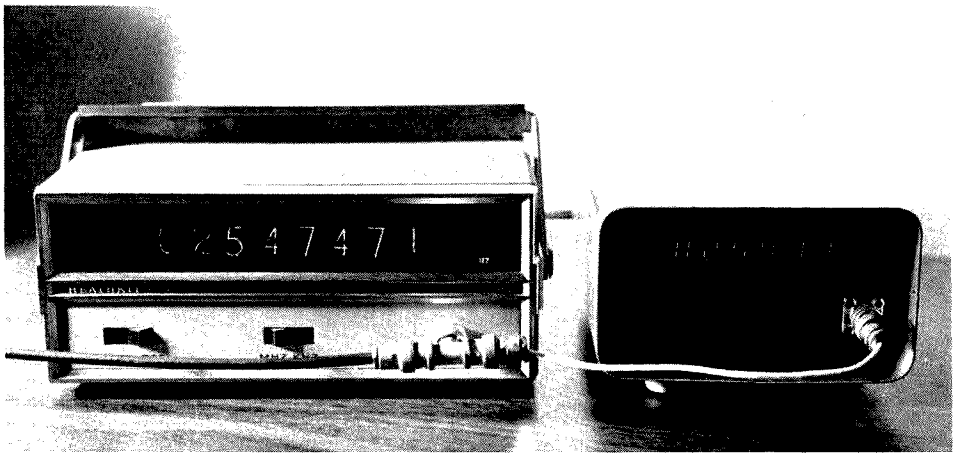

Parts List

IC1 to IC6	7447
IC7 to IC12	7475
IC13 to IC18, IC21	7490
IC24, IC25	74121
IC22	7413
IC23	7492
IC19	7402
IC20	74S73
R16, R17	10k ¼ W
R2	1 meg
R3	1.2k
R4, R13	150
R5	270
R6	3.9k
R7	1.5k
R8	390
R9	100
R10	3.9k
R11	24k

R12	15
R14	4.7k
R15	1.5k
C1, C3, C4, C11	.1 mF 20 V
C5	100 pF
C6	.001 mF 20 V
C7	100 pF
Q1	MPF 102
Q2, Q4	2N3638A
Q3	2N2222
Q5, Q6	2N2222

IC terminals Molex Soldercon
Series 90 Minitron Display (6)

Note: Transistors, ICs, terminals and display are available from Digi-Key Corp., P.O. Box 126, Thief River Falls MN 56701.

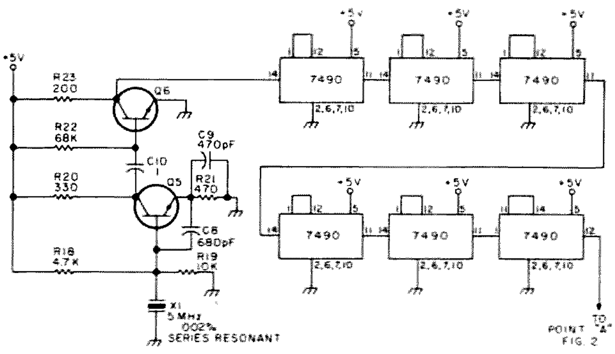

Fig. 7. Crystal controlled timebase.

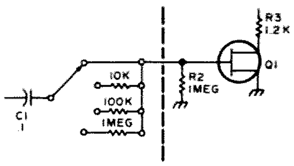

Fig. 8.

Note: For a more versatile counter, and to prevent overloading the front end, the input circuitry shown in Fig. 8 should be added.

NEW PRODUCTS

ICOM's IC-202

What has two meters, three Watts, and a swinging VXO wrapped up in a $280 package? The IC-202, of course!

A few months ago, Jay W6BWB, took his Japanese-born wife Kiyo to visit relatives in Japan. A trip to Akihabara, Tokyo's Electronics District, was also on the agenda. It was a fortunate bit of timing that ICOM had just introduced six meter and two meter walkie-talkies in Japan since Jay was "hot to trot" to get on two meter sideband after monitoring the activity for some months. It was also fortunate because the price was very reasonable when compared to other units available.

So he bought the rigs (for six and two). Listening on six or two in Tokyo was an eye-opener. I suppose it was because of their code-free license (held by many very technically competent engineers, by the way), but the bands were filled with activity day and night. Even from 60 miles outside of Tokyo, Jay found high activity.

Back in the states, the rig proved quite adequate for local QSOs out to 60 miles or so. The surprise came when he was able to work Los Angeles and San Diego some 320 and 420 miles down the mountainous coast of California! Jay's QTH is one of the better ones in Santa Cruz, but even with his KLM 16 element beam and 70 foot tower his total height above sea level is less than 125 feet. No matter how you slice it, 420 miles on 3.2 W PEP is nothing to sneeze at!

I've been able to check out two IC-202's at SBE's engineering facility. Both showed good results. Both had less than 0.125 uV sensitivity for 10 dB S+N/N ratio. Both gave better than 70 dB intermodulation rejection (+10 and +20 kHz signals required to equal the level of the desired signal). The AGC is reasonable . . . 15 dB audio change for over 70 dB rf change (0.3 uV-1,000 uV). Audio output is adequate for a portable package but may be marginal in noisy vehicles in mobile service . . . about 1 W.

The transmitter shows good design with spurious and harmonic content below the 70 dB range of the Spectrum Analyzer. Distortion products at the 3.2 W level allowed by the ALC are better than 30 dB below each tone (-36 dB by ARRL standards). Some have been able to increase the output to over 4 W PEP by backing off the ALC, but the 1.5 dB gained by doing this is probably not worth the 5-6 dB of additional "garbage" it causes.

The unit's size makes it a natural for trips, mountain-topping, battery operation, "natural power," and emergency use. It is roughly the size of the popular TR-22 FM transceiver (2¼ x 6½ x 7½). It features built-in batteries (nine "C" cells), internal whip antenna, external power jack, external antenna jack (SO-239), and external speaker jack.

The VXO covers two ranges as it comes from the factory, 144.00-144.20 and 144.20-144.40. Two additional ranges are available or an external VFO can be used. The VXO is calibrated in 5 & 10 kHz steps and can be set within about 1 kHz of a desired frequency. While this is not as accurate as rigs like the Echo II (which can be set within 100 Hz), it is good enough so that you can tell that a station is there.

The rig sports Receiver Incremental Tuning (RIT) so that the receiver can be tuned independently from the transmitter. The RIT has a center-off detent.

CW is accomplished by throwing a front panel switch each time CW is desired. This sets up a carrier shift of about 1 kHz for automatic offset. Some may find that the switch is inconvenient as it must be turned off again in order to receive. However, this is a minor inconvenience. CW output is about 4 W.

The "S" meter is of the "hang" variety making signal levels easy to read. Since it works off the AGC line it does not read below 0.5 uV, however, even though this is well into the "Q-5" area. The "S" meter doubles as an rf output indicator.

There is no squelch on the IC-202. While this is not considered a problem by many sideband operators, I like to have it on my rigs. I find it convenient.

Of the seven or eight IC-202 owners in the San Francisco Bay area, I don't know of any who have been disappointed with their units. Some have had some drift problems because of temperature variations in mobile service, but part of this seems to be traceable to using cheaper grades of American crystals not specifically cut for VXO service. ICOM has not published full specifications for the crystals and so far only includes 144.0-144.4 crystals. Since operations in many parts of the country center around 145.010 in keeping with the .010, .110 tradition on other VHF bands (6m, 2m, 220, 432, 1296), ICOM might do well to include the 145.0-145.2 MHz range at least as an option. This might eliminate the spec problem.

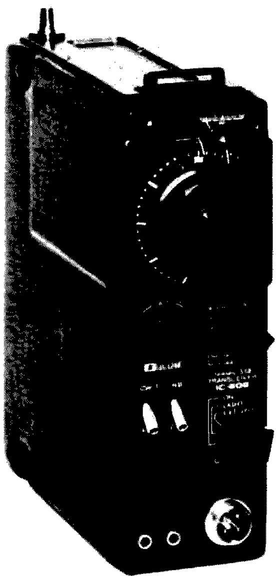

Speaking of frequencies, due to the very rapid growth of SSB in the San Francisco Bay area we have frequent QRM problems when QSOs get going in several communities independently. Since cross-town signals are quite loud, signals from other areas often aren't noticed. However, the poor guy located in between two such QSOs ends up with a real problem!

Perhaps a lesson from the 11 meter bunch would be in order. We've already made a gentlemen's agreement to use 145.005 for "DX" with 145.010 for monitoring and calling. Then "private" QSOs move up 20 or 30 kHz to get out of the way. CBers go one step further in that each community has its "channel" so that when they QSY off the calling channel they don't end up on distant QSOs. While something this formal might not be desired, it has the advantage that one can find someone in a specific area by calling on that frequency. I figure if "Red Rover" can handle it, hams ought to be able to do it!

One last comment. Bob WA6MUG took his 202 up to Lick Observatory on Mt. Hamilton (3500 feet). He worked many Bay area stations plus several hams down at Webster Radio in Fresno . . . some 120 miles. Signals were very good all the way around. The clincher is that Bob was using *battery power* and the *internal whip antenna!* The IC-202 promises to be a fun radio.

James Eagleson WB6JNN
Santa Cruz CA

Build a FAX from Scratch

-- repeater control, with ID

Most anyone who owns one will agree that finding a surplus facsimile machine was something of a mixed blessing. The unit is probably large and unwieldy; replacement parts are a problem; and some modification was likely to be needed before the recorder could be used. The alternative, customizing one's own FAX machine, isn't really too difficult. The recorder presented here requires no great amount of mechanical ability to construct. It is an electrolytic type. Chemically treated paper is drawn between a rotating helix (nichrome wire) and a steel blade. A potential between blade and helix causes a marking ion to be deposited on the paper. The unit will record FSK transmissions of weather maps, as well as some wire service photo transmissions, though the latter will suffer mirror image in recording – pictures come out reversed with respect to left and right.

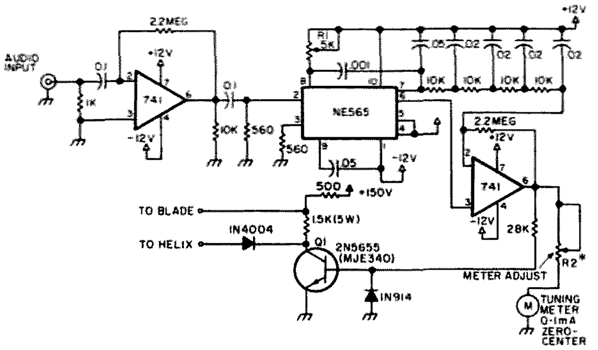

*Fig. 1. Demodulator. *Adjustable dropping resistor for zero-center milliammeter.*

73 Magazine has published a series of interesting articles on facsimile during the last several years: "An IC Facsimile Receiving Converter," Brockman, January, 1974; Ralph Taggart's series, "A Satellite FAX System You Can Build," August, September, and October, 1975; "A Fast Scan Facsimile System with SSTV Compatibility," Winkler, March, 1973; and "Facsimile for the Radio Amateur," Dean, August and September, 1971. I suggest that this material be explored before getting into the project. In particular, the article by Bob Dean (of Alden Electronic & Impulse Recording Equipment Co.) should be reviewed. It is an informative and comprehensive report on amateur facsimile.

Clyde B. Lee, Sr. W4NK
117 Woodmore Ave.
Louisville KY 40214

There is one definite prerequisite before getting underway. A little Western Union Telefax transceiver will be needed for a source of gears and bearings (and some electronic components). These "deskfax" units are still plentiful on the surplus market. If there is any difficulty in finding one locally, I can supply a source ($5.00 for the unit plus shipping). Please include a self-addressed

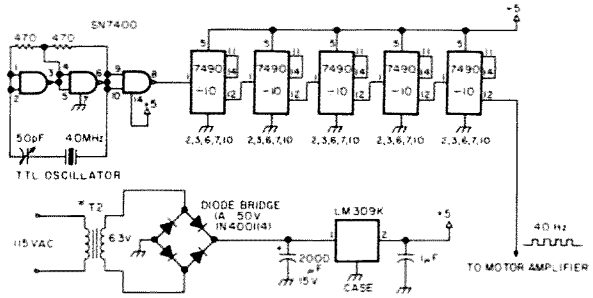

*Fig. 2. Precision ac source. *Filament transformer from deskfax.*

stamped envelope with your request.

Electronics

The demodulator, Fig. 1, is merely a RTTY terminal unit. A suitable lead resistor and diode have been added to optimize it for facsimile. This circuit, employing an NE565 phase locked loop, was presented by Nat Stinnette W4AYV in the February, 1975, issue of *Ham Radio Magazine.*[1] The demodulator works on the FM principle. The voltage-controlled oscillator of the NE565 locks onto the incoming signal and tracks it between the frequencies of the black (1500 Hz) and white (2300 Hz) tones, resulting in a corresponding dc shift at the output. A voltage comparator connected to the output of the PLL produces plus and minus voltages to activate printing transistor Q1. A zero-center milliammeter functions as a tuning indicator.

The precision ac source Fig. 2, supplies 40 Hz to a 50 Watt class B motor amplifier, using a pair of 6550 tubes connected as zero-biased triodes. Inasmuch as the deskfax operated at 180 rpm (60 Hz supply), 40 Hz is required to lower the speed of the synchronous drive motor to produce 120 rpm. The 120 rpm helix rate is required to copy weather map and some wirephoto transmissions. The little TTL crystal oscillator circuit is a "surefire" one from *QST*, February, 1974, p. 34. When others are cranky, this one will work!

I used the following procedure to select T_X, the motor amplifier output transformer (see Fig. 3). The method requires a known composition resistor, VTVM, and filament transformer (part of a more extensive routine by WØMKF in *Ham Notebook* for determining values of unknown inductances). The setup will only give ball park values of impedance, but that's close enough:

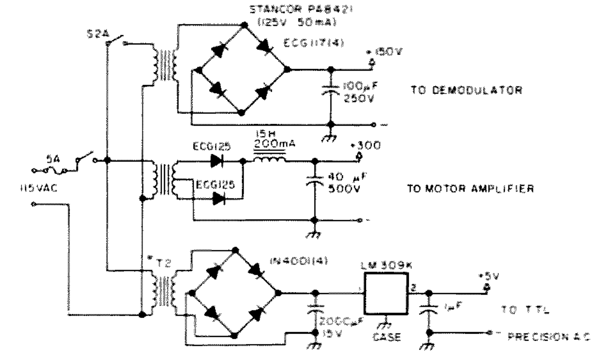

*Fig. 3. Power supplies. *T2 — 6.3 V from deskfax. S2 — DPST switch.*

1. Measure ac voltage across known series resistor.
2. Compute I from E/R_L.
3. Measure ac voltage across inductance.
4. Compute Z from E/I.

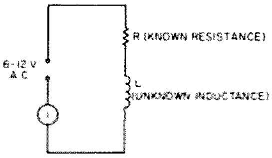

Applying the method, in turn, to deskfax motor windings, primary and secondary of a surplus (unmarked) power transformer on hand, the following values were obtained:

	Z (Ohms)
Deskfax:	750
Primary:	1400
Secondary:	20k

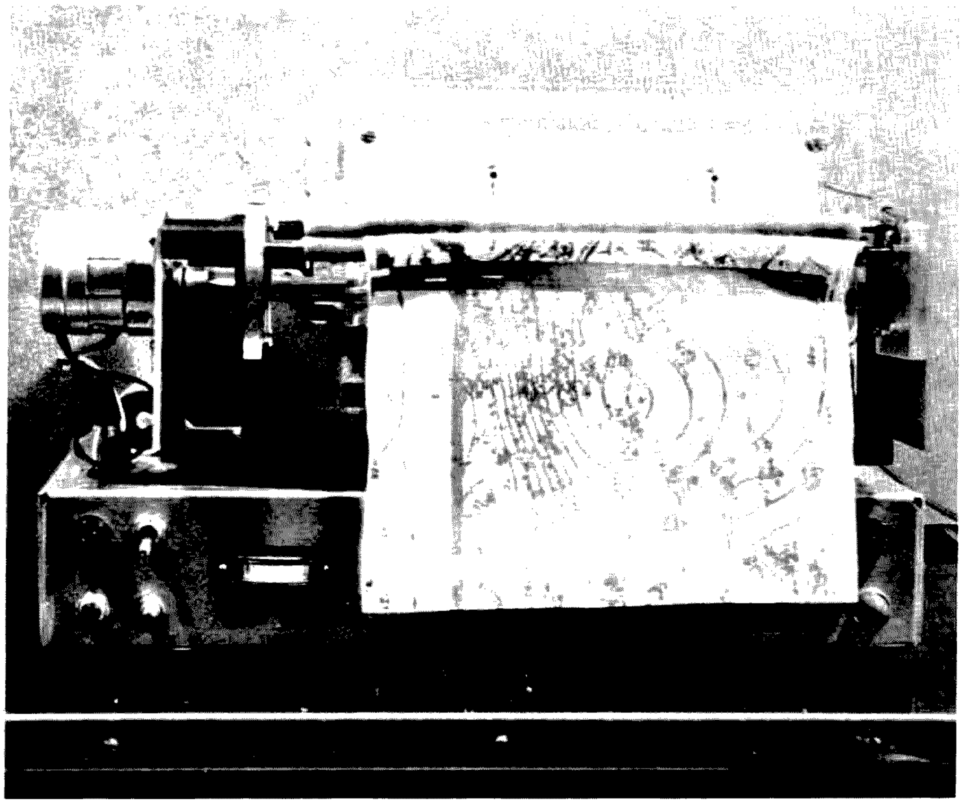

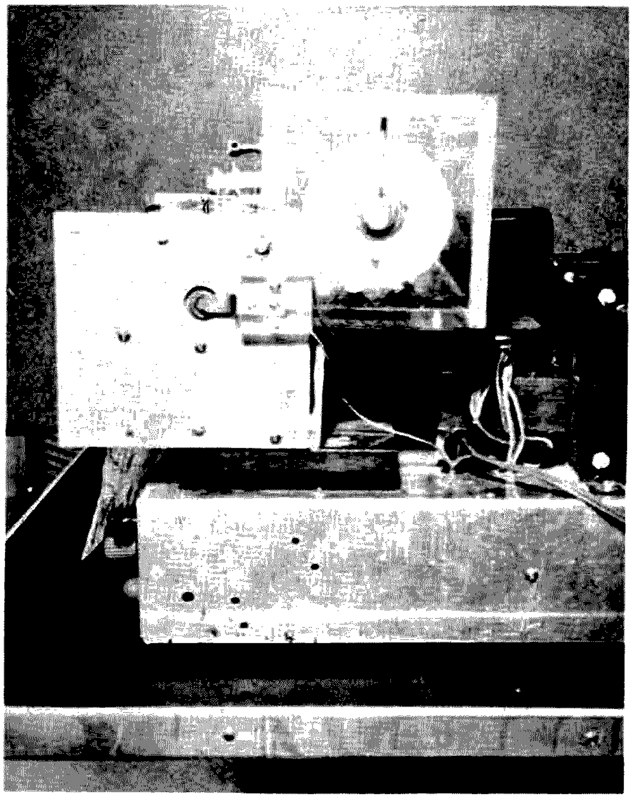

Helix contactor.

Fig. 4. Motor amplifier. T_X – see text. T1 – Stancor A4713. C – Stancor C1707. S1 – N.C. SPST push-button switch. All resistors ½ Watt 10%.

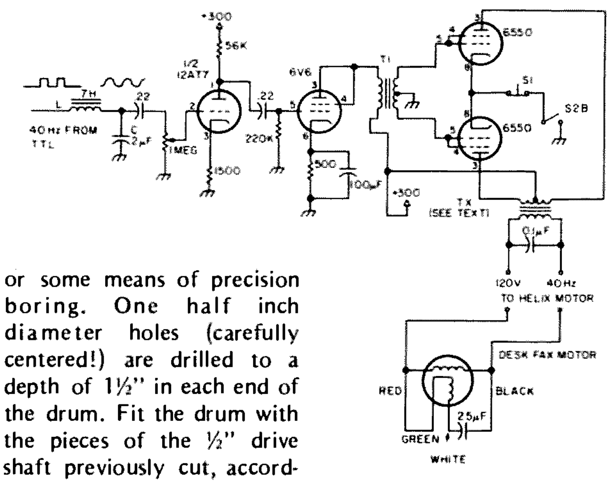

That's the best combination my junk box could produce – anyway, it works!

In the motor amplifier, Fig. 4, L and C (7 Henry choke and 2 mF capacitor) filter the square wave 40 Hz tone from the TTL source to an acceptable sine wave for the amplifier. In selecting the output transformer, T_X, select a husky one, 115 V primary, with a secondary around 350-0-350 V at 175 to 200 mA.

Mechanics

As a first step, dismantle the deskfax. Disengage the traversing mechanism. Rotate the drum and slide it slowly to the left. As you look through the hole in the drum you'll see a brass screw in the drive shaft. Remove the screw. Loosen the collars and fiber gear. Now the half inch drive shaft can be removed from the left. Remove the cradle and strip it. Remove the following electronic components: the push-button switch, the 6.3 V filament transformer, and the 2.5 mF motor capacitor.

Cut the cradle in two, making the cut 4-3/4" from the left end (the bronze sleeve bearings should be covered to protect them from filings). Next, cut the 1/2" steel drive shaft as follows: from the left end of the shaft, 1 piece 4-7/8"; from the right end of the shaft, measuring from the shoulder, 1 piece 2" long. (This allows ½" clearance between the end of the helix drum and the right bearing.) See Fig. 5. Center and drill and tap the bearing end of the 2" piece for a ¼" 4/40 screw (this will be a wiping contact).

Helix

I've used Wink W6WMI's system in constructing the helix. (See Fig. 5.) The helix drum is a plexiglas rod 1½" diameter, 10" long. This *is* a step that will require a lathe or some means of precision boring. One half inch diameter holes (carefully centered!) are drilled to a depth of 1½" in each end of the drum. Fit the drum with the pieces of the ½" drive shaft previously cut, according to Fig. 5. Drill and tap for a 4/40 screw ¼" in from the right end of the drum. This screw must go through the wall of the drum and make good electrical contact with the drive shaft. Drill and tap for 6/32, ¼" screws to anchor the #22 nichrome helix wire. The screws are located ¼" in from each end of the drum and positioned to form a 370° lead (one spiral turn occupying 9" with about 5° overlap at each end).

Looking at the right end of the drum, rotation will be counterclockwise. The nichrome wire is to be wound clockwise (sweep will be from right to left as contact is made with the blade). Snug the wire up as tightly as possible on the drum, then pass the free right end over to be fastened by the contacting screw.

Cradle

Using a 3/16" bit, drill any additional holes needed in the base of each of the two pieces of cradle previously cut. Set the pieces on a plexiglas sheet 3/8" by 4½" by 14¼". Temporarily install the helix and align it so that it turns smoothly. Mark the mounting holes, then drill and tap for #8 screws. A 13" by 17" by 3" chassis is used for assembling the recorder. Place the plexiglas base (above) on the chassis. At this time install whatever you intend to use for shock mounts. There should be at least 4. (Excellent shock mounts are available from the deskfax, but there are only 3.)

Paper Humidor

An aluminum plate 1/8" by 3½" by 10" is to be installed on the flange of the right cradle member (this flange formerly supported the optical system). Position the plate so that it overlaps the forward edge of the flange ½" and is aligned with the right end of the cradle. Before mounting the plate, using a 3/16" bit, drill holes in each corner of the plate for mounting the paper humidor.

The Alfax paper must be kept moist for the electrolytic process to work; so while the plexiglas enclosure does add to the expense of the project, it is an essential part of the recorder. IPS Weldon #3 solvent (or other suitable brand) is used in assembly. You'll need an applicator. I paid the additional price and had the distributor cut the pieces to size. See Fig. 6. The box goes together easily – just tack the members with a few pieces of Scotch tape, apply the sol-

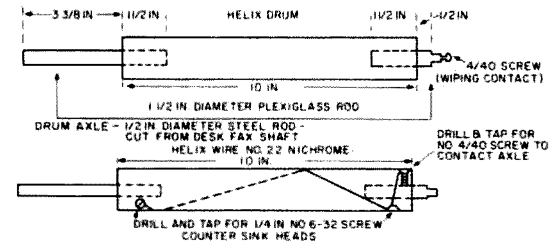

Fig. 5. Helix.

vent, and in a matter of seconds the pieces are *really* welded. Note that paper will be fed through a 1/8" slit, formed by pieces A and B of the front of the humidor.* Next cut out two supports for the Alfax paper. Use 3/8" plexiglas and cut to the dimensions of Fig. 6. Center these at the ends of the interior of the humidor and cement with solvent. Align the top, then drill and tap for a ½ inch 6/32 screw at each end. Place a roll of Alfax paper in the humidor and replace the top. Drill and tap for a 6/32 screw 2" long that will extend down through the cover and contact the hub of the paper roll. These should be about 9/16" in from the end of the cover and in line with the center of the hub. Do this for both ends. The 2" 6/32 screws installed will function as "brakes" to control the flow of paper.

Blade Assembly

Cut a piece of 3/8" plexiglas to 1¼ by 9½". Install steel pins at each end, as in Fig. 7. (Material for the pins can be taken from the deskfax push-button switch assembly.) Cut a piece of ½" aluminum angle and install with 4/40 screws as shown. The two screws at each end at the top will anchor two phosphor-bronze motor brush springs. The three screws along the forward edge will secure the blade,[2] wedging it between the plexiglas and the aluminum angle. (The National Weather Service and some TV stations use Alden facsimile recorders that use a blade in the form of a steel loop. These are discarded after a little wear and are a good source of material for the blade required here. 9½" sections can be cut from the loop.)

Paper Feed Assembly

See Figs. 8 and 9. The paper feed mechanism is driven by a 5 Watt, 115 V, ½ rpm, 60 Hz synchronous motor. This is a Hurst, Model CA, available directly from the Hurst Mfg. Co., Motor Division, Princeton, Indiana, currently at $18.06. This speed (½ rpm) with ½" rollers, produces a 9" by 11" recording. Not exactly symmetrical, if one is a purist. The rollers are made by slipping 10-3/4" lengths of rubber tubing (½" O.D., ¼" I.D.) over ¼" steel rod (the material should be turned and ground shaft or drill rod). The driven roller is 13-1/8" long; the idler is 11-7/8". Ball bearings (NICE type 1602 DC) are used for the driven roller. The bearings are 11/16" O.D., ¼" I.D. The tension springs, E and F, are 1-3/4" long, cut from the traversing mechanism (spring) of the deskfax. Reference Fig. 9: the 3/16" diameter holes at O and P are to be at a depth of 3/16" on the inner surfaces of supports A and D. These will retain a 3/16" rod (preferably brass) to smooth and align the paper as it emerges from the slit in the humidor. The bottom of the rod should align with the top of the helix and be positioned about 5/8" forward from the center line of the helix. (This detail is not shown in the exploded view of Fig. 8.) Two aluminum "end plates" of 1/8" material, each 4½" by 5¼", support the paper feed assembly and the contactor for the helix wire. See Fig. 10. A coupling 1" long will be required to couple the 3/16" motor shaft to the ¼" roller rod (you'll probably have to make this). Place the plexiglas supports, A and D, on their respective end plates, and align the top and forward edges. Mark the mounting holes and the center line of the driven roller shaft. Drill a 5/16" hole for the motor shaft. This is to be expanded to 1/2" after the motor mounting holes have been marked and drilled.

A 3/4" diameter hole is to be drilled in the right end plate, 1-3/4" from the top edge, 2-7/8" from the forward edge. This is for the rotating contact (a 4/40 screw) in the right end of the helix drive shaft. The contactor is merely a piece of "springy" brass mounted on a small piece of 3/8" plexiglas.

Getting It All Together

Install the fiber gear and then the 7/16" collar at the left end of the helix drive shaft. Install the helix drive motor in the left cradle member. Place the helix in the sleeve bearings and mount the assembly to the plexiglas base. Position the aluminum end plates with the bottom edges aligned with the bottom of the cradle, and with the rear edges aligned with the rear edge of motor support. Attach these to the ends of the cradle with #8 screws (2 in the lower edge and 1 on the uprights that house the sleeve bearings). Press the ball bearings into the 11/16" holes in the plexiglas supports (A and D). Slip the paper smoothing rod into each support, seating it at O and P (Fig. 9). Install the driven roller. Attach this assembly to the aluminum end plates. The left support, A, will require 3 spacers 1½" long. These can be made up of 3 sets of 3/8" O.D. spacers for #8 screws, ½" long (H. H. Smith #2119) and 1" long (H. H. Smith #2117). Slip the coupling onto the left end of the roller shaft; mount the motor. Mount the springs and adjustable bearings (Fig. 8) for the idler roller. Install the aluminum base plate for the paper humidor. Place the humidor on the plate, centered with the helix, and with its front 1-1/8" from the center line of the helix. Mark and attach the humidor to the plate (use ¼" screws). Slip the left pin of the blade

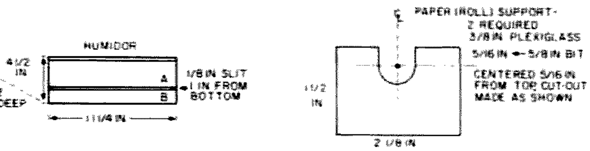

Fig. 6. Humidor and roll supports. Humidor (3/8" plexiglas): 2 pcs. 3-3/4" x 3-3/4" (ends); 1 pc. 4-1/8" x 11-1/4" (back); 1 pc. 3-3/4" x 11-1/4" (bottom); 1 pc. 4-1/2" x 11-1/4" (top); 1 pc. 2-5/8" x 11-1/4" (front); 1 pc. 1-3/8" x 11-1/4" (front). Assemble with IPS Weldon #3 solvent.

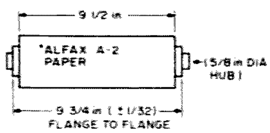

*Fig. 6(a). *Alfax paper collapsible core.*

***Plexiglas, solvent, and rubber tubing were obtained from General Rubber & Supply Co., 3118 Preston Highway, Louisville KY.**

assembly into its mounting bracket (a piece of 1/8" brass, ½" by 3"). Rest the blade on the helix, center it, and, with the blade assembly leveled, mark the right end plate for a 1/8" bearing hole. Similarly mark and mount the left bracket. (Small thin pieces of brass, attached with 4/40 screws to the outer surfaces of the bearing members, will prevent lateral movement of the blade assembly.) Two #8 screws, 1¼" long, support the phosphor-bronze motor springs (Fig. 7). Use a #55 (or similar) bit and drill a hole adjacent to the head of each screw. Drill and tap the front wall of the humidor for these #8 screws, 1" from the top and 1¼" inch from each end. Two ¼" hex spacers, 1" long, threaded for a 6/32 screw (H. H. Smith #2324) are drilled and tapped for a 4/40 screw at ¼" from an end. Run a locking nut down on two 4/40 screws, 3/4" long, and then install in the hex spacers. Solder compression-type springs (I cut them from a transistor heat sink clip) to the tips of each 4/40 screw. Thread small gauge copper wire through the holes in the #8 screws after installing them in the front wall of the humidor. Secure the ends of the phosphor-bronze springs (the other end of the springs should be fastened to the aluminum angle of the blade assembly). Solder a lead to the right spring. Attach the helix contact to the right end plate, centering it on the 4/40 screw head from the drive shaft. Put a few drops of #10 oil on the sleeve bearings and worm gear. Turn the helix by hand to see that everything is still aligned. Set the collar and fiber gear in place. There should be just a tiny amount of backlash with the fiber gear and worm – and a similar "tiny" amount of end play between the collar and left bearing. Apply power to the helix drive motor to make any final adjustments of the 4 mounting screws necessary for smooth operation. Pour a small quantity of water into the humidor, and, assuming all of the electronics are functioning perfectly(!), place a roll of paper in the recorder and look for NSS!

Operation

Fleet facsimile broadcasts are made from NSS, Washington, D.C., on the following frequencies (kHz): 3357, 4975, 8080, 10865, 16410, and 20015. Incidentally, publication H.O. 118, available from the U.S. Naval Oceanographic Office, Washington, D.C., contains a wealth of data on worldwide FAX weather broadcasts (as well as RTTY). There is also information on interpreting weather codes.

This is the procedure I used with a Drake SSB receiver, an R4B, to adjust the PLL demodulator. Tune in the NSS signal (upper sideband). Most transmissions are of about 10 minutes duration, with 800 Hz shift between 1500 Hz (black) and 2300 Hz (white). Set R1 of the demodulator fully clockwise (maximum resistance). Tuning to the 2300 Hz tone

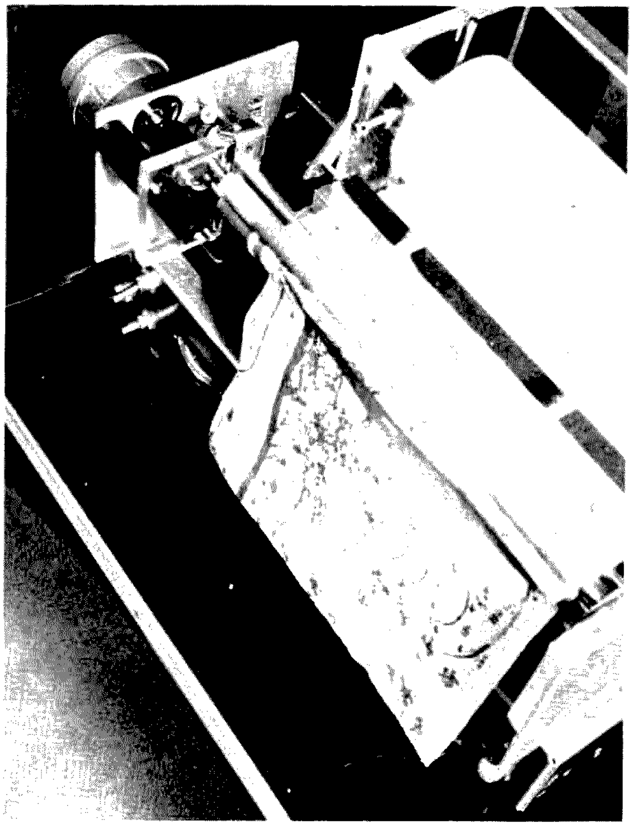

Paper feed detail.

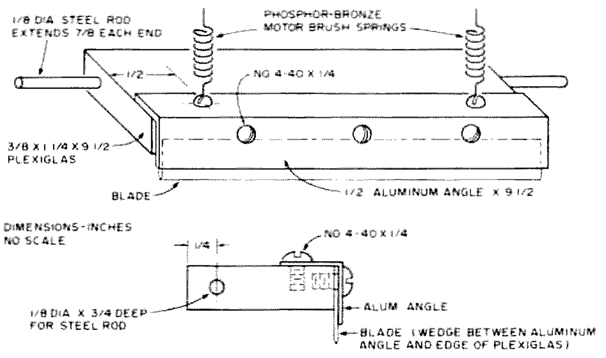

Fig. 7. Blade assembly.

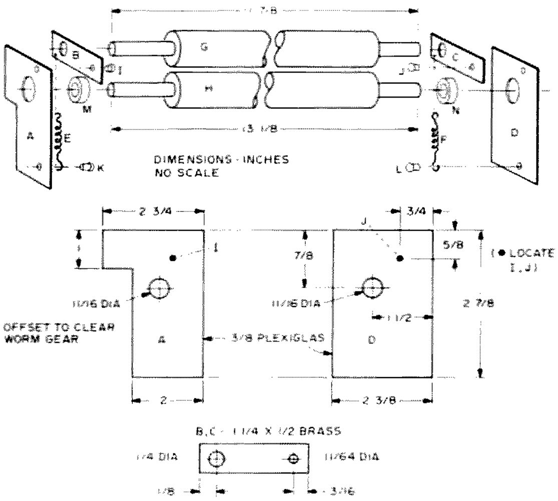

Fig. 8. Paper feed assembly (not to scale). A, D: left and right supports, 3/8" plexiglas. B, C: top roller bearing, adjustable brass, 1/8" x 1/2" x 1-1/4". E, F: tension springs. G, H: rollers. I, J: #8 screws, 1/4". K, L: 4/40 1/2". M, N: ball bearings.

should cause the zero-center milliammeter (tuning indicator) to deflect toward maximum negative. The 2300 Hz tone is transmitted between maps, so this is a good time to check the tuning indicator and set it for maximum deflection. Remain tuned to the 2300 Hz tone until a start tone is heard, indicating the beginning of the next map transmission. This will be a lower tone (I believe it is 675 Hz). This will be transmitted for 10 seconds, and will be followed by about 30 seconds of phasing pulses. During this time, with the recorder running, you should see the recording coming in as a field of black with a white line (about ½" wide) in the field. Momentarily activate the phasing switch (push-button) and note the shift of the white line to the right. Continue to pulse the phasing switch until you have the white line at the left edge of the paper. You now have your drum phased with that of NSS for proper reception of the map. The copy will probably look thin and skimpy with this setting of R1. Back off on R1 slightly and retune the signal. Note that you are able to control the width of lines in the recording (to some degree) by the setting of R1.

The recorder will copy wirephoto transmissions made at 120 rpm. Wirephoto transmissions will be on lower sideband (and inasmuch as press frequencies are private, it would be inappropriate to publish them here). I can say that occasionally I've tuned above 15690 kHz and come upon a signal that sounds like a flock of nervous wild turkeys, and with a little jockeying around the lower sideband, was able to get a picture.

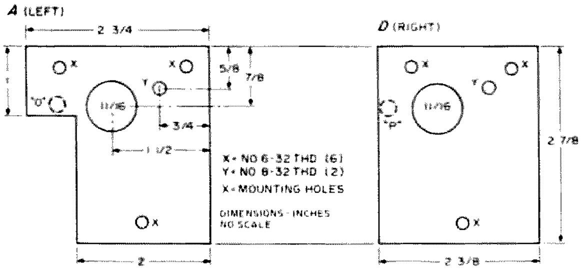

Fig. 9. Paper feed supports (3/8" plexiglas). Drill and tap each piece for 8/32 ¼" screw, 3/4" from forward edge, 5/8" from top. Drill 11/16" hole for ball bearing, on each piece 1½" from forward edge, 7/8" from top. 0 and P: 3/16" diameter holes to a depth of 3/16" on inner surface of each piece, 7/8" from top, 2¼" from forward edge, to retain 3/16" smoothing and aligning rod (brass, 3/16" x 12¼").

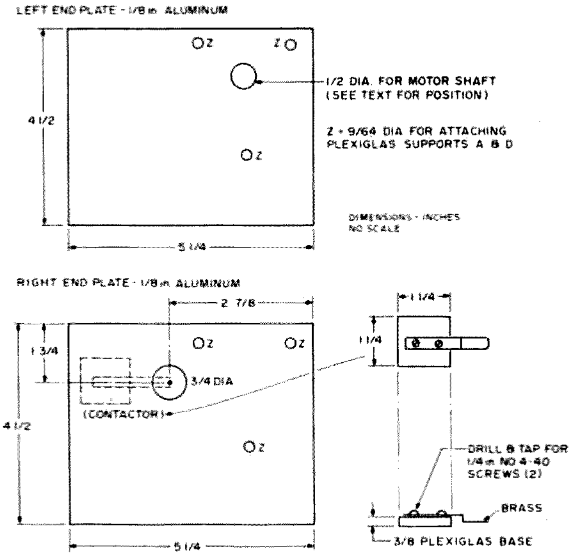

Fig. 10. End plates for paper feed assembly.

Options

If a smaller format is preferred, Alfax paper is available in various widths: 8½, 6-1/8, 5½ inches (¼ inch is to be added to accommodate flange thickness). A 19 inch format with paper feed of 96 lines per inch is more or less standard in facsimile transmissions. Lines per inch are increased with a smaller format, according to the relation:

$$\text{LPI} = \frac{\text{Helix rate (rpm)}}{\text{Paper feed (in./min.)}}$$

One would merely have to rewind the helix, select a paper feed motor with slower rpm (or decrease the diameter of the rollers), and adjust the paper roll supports accordingly.

Acknowledgement

Credit should be given to Lindsay Winkler W6WMI for much of the mechanical detail here. As an inspection of his "Fast Scan FAX System" (March, 1973, *73 Magazine*) will show, I've drawn freely on his ingenious design of helix and paper feed mechanisms. I am indebted to "Wink" and also to Nat Stinnette W4AYV for simplifying the project. ■

References

1. PC boards for this circuit are available from Nat Stinnette W4AYV, P.O. Box 1043, Tavares FL 32778. Undrilled board @ $4.75; $25.95 for a wired and tested unit.
2. Paper, helix wire, and blade (a steel loop) material can be obtained from Alden Co., Westboro MA 01581.

ou goons don't ever proofr

LETTERS

I insist that you print ev

from page 14

was to deliver *73* to me by the first of the month. OK, already! Carumba! Mon Dieu! Mein Gott!

My January issue arrived in early Feb., the Feb. issue arrived four days later, the March issue arrived the third week in Feb., the April issue around March first, and the May issue around March tenth. You win! At this rate I will have the entire 1976 *73 Magazine* by July 4th!

Now, if you guys only published the Field Day results, maybe I could place some bets. Maybe if you published race results . . .

Joe Koziol W1FLX
Pittsfield MA

FCC SLOWNESS

First of all I would like to say that I, for one, like the new format of your magazine and your section on computers. I would like to see more future articles pertaining to the use of minicomputers in ham radio.

Secondly, I would like to comment on the long waits that the FCC puts prospective hams through for the return of tests, licenses, etc.

Recently I passed the Novice class examination and am now waiting patiently for my license to return. After waiting six weeks for my test to arrive (which was supposed to have taken three), I am now steeled to wait another eight weeks or longer for my license return.

I know that the surge in CB licenses has put utter chaos into the offices of the FCC. I would like to suggest that, as many others will agree, something should be done to keep the CB licenses separate from the ham licenses and reduce waiting periods down to tolerable limits.

With CB licenses, no one waits for that coveted piece of paper to arrive before going on the air. As a matter of fact, 99 out of 100 times they will start "ratchetjawing" as soon as they have their set operable.

Not so with ham radio. The prospective ham just sits there listening to the QSOs with a longing in his heart to be able to join in and aggravation in his brain knowing that all that is keeping him from it is the slowness of the FCC.

I would also like to comment on ham radio public relations. I work for the local newspaper in Scottsboro, Al., and we are more than glad to offer PR to hams. All that it takes with most newspapers is to let the editor know of the usefulness of ham radio and to be willing to be interviewed about the subject.

I have enclosed a clipping out of our paper that I wrote as PR for our second Novice and General license study class that is conducted at the local trade school by Richard Matthews WA4NWW. The response was good and helped to secure more students for our second class.

Please start including more building projects for the Novice, as I am sure that there are lots of Novices out there who would appreciate some simple projects to add to their station.

I would also like to take this time to express my appreciation to Richard Matthews WA4NWW, for the patience and understanding he showed in helping me to pass my Novice test.

Now, if my license would only hurry.

Larry Jackson
Section AL

HERE'S HOW

Ham Radio Classes Are Now Offered

WE ALWAYS GET OUR MAN

A Montgomery Amateur Radio Club member may have averted a tragedy on Monday, March 22, when he observed what appeared to be an assault and possible kidnapping.

The amateur radio operator, Ralph K3CMY, had just emerged from a store on Route 124 near Gaithersburg (MD) when he saw a man cursing and striking a woman. The man then forced the woman into an automobile as she resisted and screamed for someone to call the police. K3CMY reached for the microphone on his mobile FM radio and dialed the Montgomery County Police through the telephone autopatch of the club's Rockville FM repeater station. The car containing the man and woman pulled out onto Route 124 and headed north.

The Montgomery County Police advised Ralph that a patrol car was not immediately available. Ralph volunteered to try to keep the car in sight and the autopatch open. The dispatcher agreed.

On Muncaster Mill Road, near Redland, Ralph spotted a Park Police patrol car and advised the Montgomery County Police dispatcher of this possible source of help. The Park Police stopped the car carrying the man and woman and the Montgomery County officers arrived within moments. The people in the car were taken into custody.

K3CMY was warmly thanked by the arresting officers and the Montgomery County dispatcher for his assistance and the ability of amateur radio to deliver solid communications when the need arose.

At this time no details are known regarding the status of the man and woman who were the object of the chase.

Dave Halliburton WA3ZOR
Gaithersburg MD

DEEP THANKS

Mr. John Meshna
Dear John:

Please accept my deep thanks for sending me one of the last of your "mystery" calculators, as described by J. K. (Jake) Bach in the March, 1976 *73 Magazine*.

By the time I'd read Mr. Bach's article, written him my thanks for a really intriguing story, and received his delightful answer and a fascinating resumé of his background, I could hardly wait to receive a "busted" calculator from you and start to explore its innards, as per Bach.

When U.P.S. delivered your box to me, I was more than ready to pry into its lovely interior, and did so immediately.

The first step was to insert 4 "D" cells and flop it over to see if anything had happened. Voila, everything had happened! It was in full bloom and fully functional, with no open "L1" and no soldering needed.

Over the years, John, you have sent me many real "goodies," but this time you are but the keystone of a triumvirate: I have to thank Wayne Green for publishing your ad and Bach's story, and Mr. Bach for his careful research and manuscript.

C. E. Price W8HPR
Lehigh FL

MORE KUDOS FOR S. D. SALES

More kudos for S. D. Sales – great people to do business with!!!!

Your outlook on CBers is refreshing. (Even made *QST* stand up and take notice!) I found that both CBers and hams have much in common – obnoxious members who curse and just show disrespect for all who share the freqs.; great members who will give their all for someone just to help him out. Both have courteous members who are a pleasure to listen to and who this person looks forward to meeting on the airways (hopefully soon!). The greatest common link is the need to communicate!

Jim Griffin
Las Cruces NM

STOP THE PRESSES!

Stop the presses!! Stop the presses!! I got my April issue in February.

If this keeps accelerating, my brand new three year subscription will run out in August!!

Roy Rehbein WN1VHX
Hopedale MA

LOYAL ARRL MAN

Keep up the good work – I really enjoy your *73 Magazine* – it is really F.B. and tells it like it is.

As a loyal ARRL man, I sometimes get blood pressure rises, but a free press is essential for us to know all sides of every issue affecting our great ham fraternity.

Leo Scanlon WB5OJT
Vicksburg MS

HANG IN THERE

I've been reading, in various radio magazines, letters from readers complaining of the length of time it takes the FCC to process their license applications (or else they think the code requirements are too tough).

I'm writing because I think I have an actual example which might encourage these people to hang in there and be patient.

You have heard the old saying that good or bad, things come in threes.

The first thing was getting my license. After receiving my Novice license, I took the Technician test so that I wouldn't lose my call. However, I never went on the air as a Tech.

Continued on page 158

Geoffry W. Kufchak WA1UFE
15 Fourth Ave.
Westover AFB MA 01022

Der Repeatermeister

-- then get satellite pictures and other things

As I promised in an earlier article, here is the conclusion to the construction of a 220 MHz repeater. It is the control system I designed to operate any repeater with minimum attention. Once put into operation, there should be no need to ever service the control system, except for changing the ID.

This system consists of two main PC boards, the timer control and the ID. The timer board contains all the necessary circuitry for the complete and unattended operation of a remote repeater with provisions for timeout reset, instant dropout, and autopatch access and de-access with adjustable timers. The timers consist of two NE556s and one NE555 which are set up to control the transmit keying transistor. The timing functions are: autopatch timer, timeout timer, tail timer, ID timer, and what I call a receiver off timer.

The CW identifier is an improvement on the circuit in the *FM and Repeaters Handbook* published by the ARRL. It can be found on pages 136 and 137 (1972 edition). I didn't understand the clock oscillator and stop logic circuit, so I redesigned it to operate with the control board I had designed. However, it will function on its own quite well and will interface with almost any existing control system. Also, it's dirt cheap to build. Depending on where you get the 8223, total cost for parts is about $7.00. In fact, the whole system should only set you back about $30.00, which is cheaper than a certain CW ID kit I know of using diodes for programming.

Both boards are single-sided and four and three-quarters inch square so they may be stacked to save space. I really hate using a lot of jumper wires, but it's easier than trying a double-sided board. I admit that I'm not that good at making PC boards yet. If the boards are used separately, there is provision for using an LM309K on each; if used together, one may be eliminated and a jumper installed from the board with the regulator. Total current drain is around 400 mils, which is well within the ratings of the LM309K.

The nice thing about using a PROM is that it can be custom programmed in the field. Several magazines have published articles on programming the 8223, the best one having appeared in Popular Electronics, July, 1975, page 27. Once you get

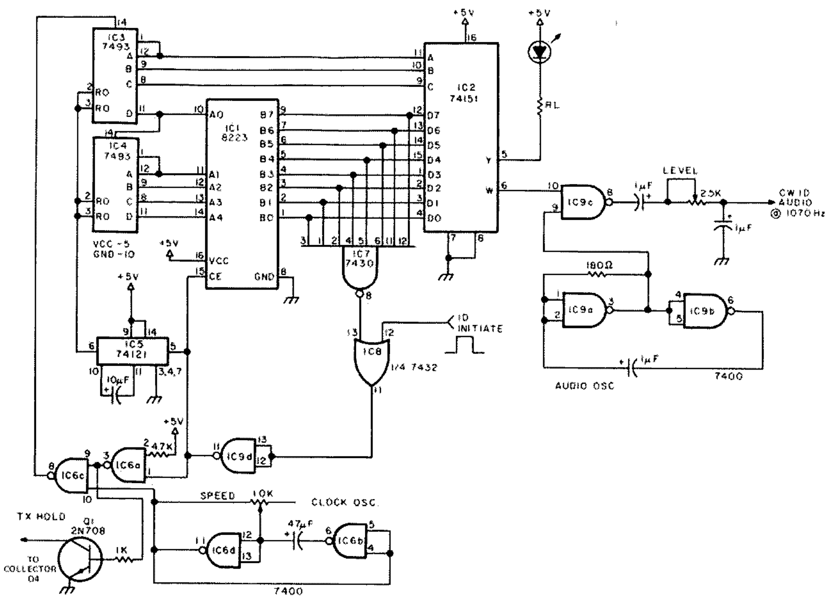

Fig. 1. PROM CW ID. Program note: Dit — 0 — Space in same letter 1; Dah — 000 — Space between letters 111; Space between words 11111 or 111111.

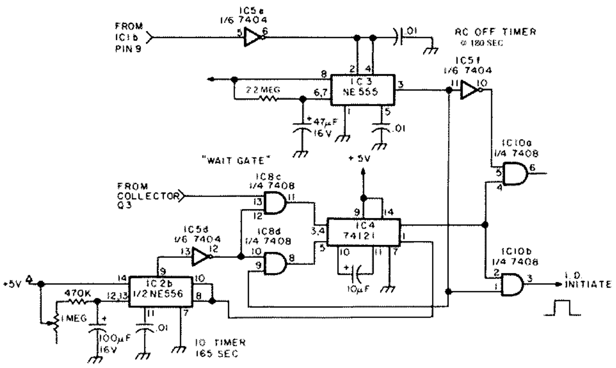

Fig. 2. "Smart" ID Timer.

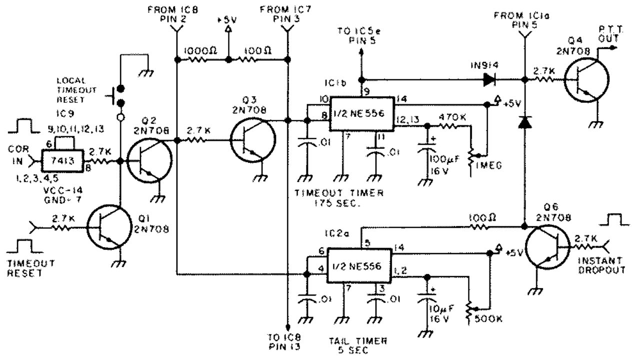

Fig. 3. Timeout and Tail Timer.

used to the procedure for programming, it only takes about five minutes to do the whole chip.

PROM CW ID

The changes made to this circuit are simple. Rather than the stop logic the original had, I used a 7430 8-input NAND gate. This chip will give a logic 0 output for all 1 inputs. The 7432 will decode the 0 from the 7430 and the 0 on the ID Initiate input and give a 0 output which is inverted by IC9d to fire the one-shot, resetting the two counter ICs to zero, and also puts a high on the Chip Enable of the 8223 which puts all the outputs to a logic 1, thus ensuring that the ID circuit stays stopped until initiated again by a logic 1 pulse.

This is very important. Program the 8223 with reverse logic. If you want a tone, the output of the 8223 must be a 0. Also, make sure that no set of outputs is all logic 1s, because this is the stop word. Try to arrange the programming in such a way that at least one output per word is a 0. Example: DE WA1UFE. Word 0 – 1000111, word 1 – 0111010, word 2 – 1011111, word 3 – 0001000, etc. The words read from right to left. That is, B7, B6, B5, B4, B3, B2, B1, B0. Of course, the stop word, 1111111, can be programmed anywhere in the chip, but should be immediately after the message.

A "Smart" ID Timer

This is the best part of the whole design. I wanted an ID that would not come on over someone's transmission, would wait until the carrier dropped, would have to ID on initial keyup, ID after a timeout, and ID once after repeater usage ceased. This one does it all.

IC2b and IC4 are connected as a self-resetting timer. But the gates marked "wait gate" control the resetting of the timer. Assume that IC3 has timed out. This puts a low on pin 9 of IC8, which puts a low on pin 5 of IC4. If there is no signal being received, pin 13 of IC8 is also low. As soon as IC2b times out, pins 10 and 12 of IC8 go high. Now the circuit is "waiting." Backing up a bit, IC3 is timed out because pins 2 and 4 see a

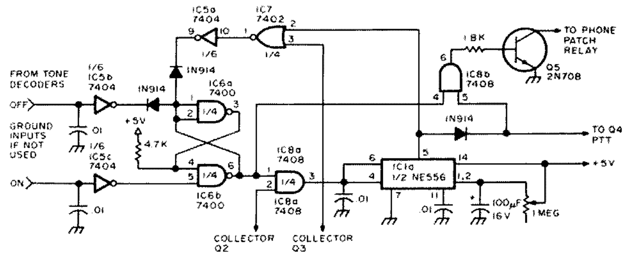

Fig. 4. Autopatch Timer.

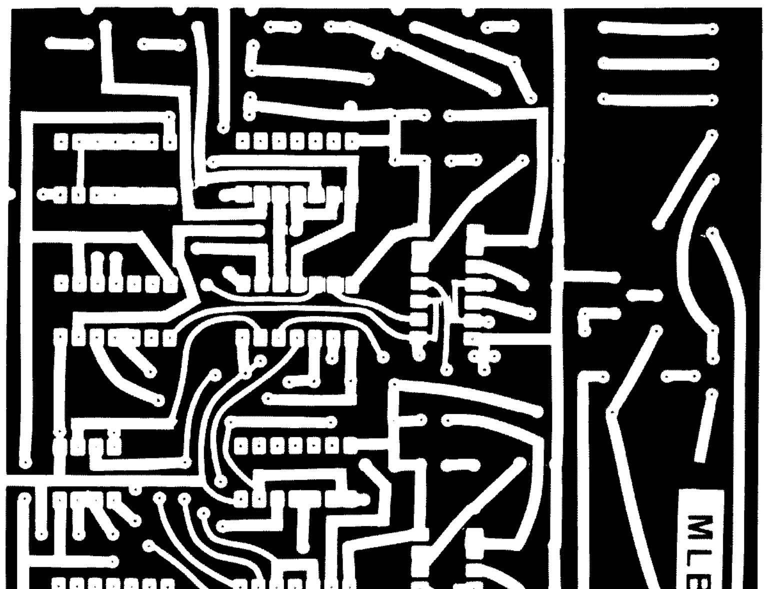

Fig. 5. Master logic board (full size).

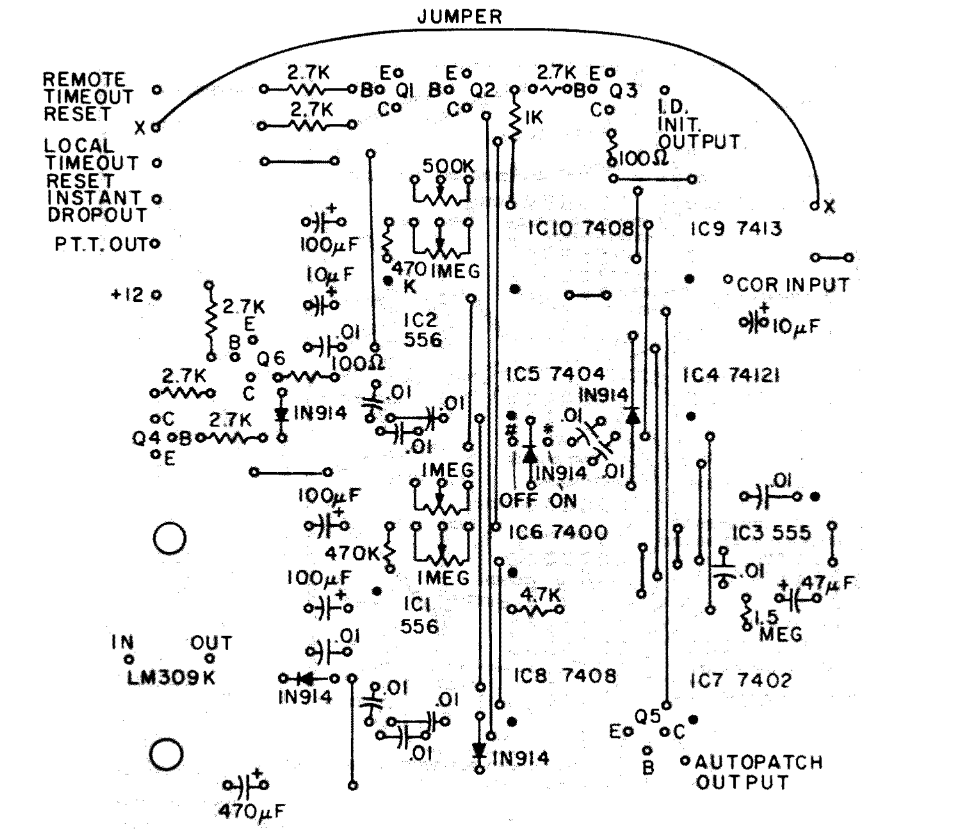

Fig. 6. Component side, master logic board. Dot identifies pin 1. Drill two small holes near input and output of IC9 and add jumper shown. Use insulated wire. Also use insulated wire for the long jumpers.

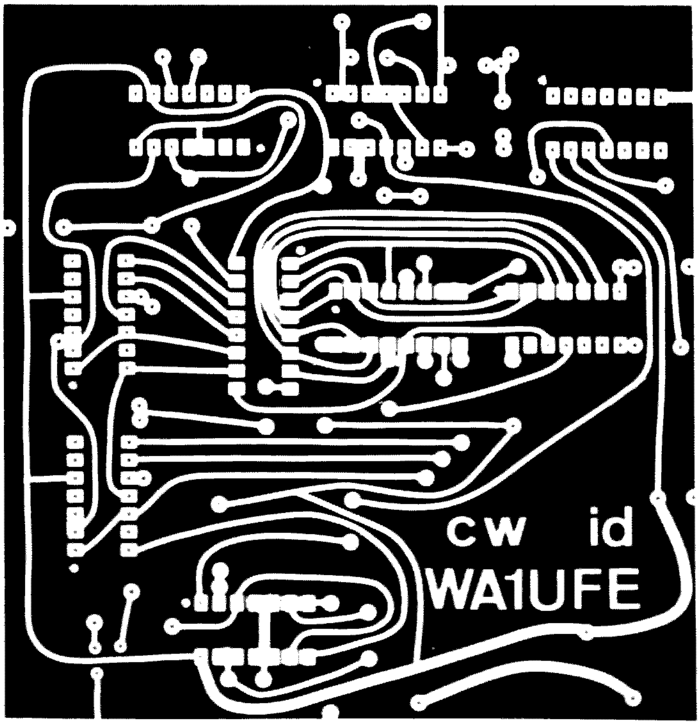

Fig. 7. CW ID board (full size).

high. As soon as the input goes low, the timer is reset, and will start timing as soon as the input goes high again. Now, suppose a signal is received. Pin 13 of IC8 goes high, and since pin 12 is high, a high is put on pins 3 and 4 of IC4. Nothing happens yet since pin 5 is still low. As soon as the signal drops, pins 3 and 4 go low and IC3 starts timing again, putting a high on pin 9 of IC8, which puts a high on pin 5 of IC4 and fires the one-shot which initiates the ID and resets IC2b. A similar sequence occurs during repeater usage, timeout, and final ID.

The reason for IC10a: I was trying to get an exclusive output for use with a voice ID circuit; logically, it should work, but practically, it doesn't.

Timeout and Tail Timer

A simple enough circuit: two timers working out of phase with each other. IC1b is set to control the transmitter on-time, which is variable from about 1 minute to 3½ minutes. IC2a is set to time out at 5 seconds and is reset each time the receiver squelch is broken. If no tail is wanted, a logic one at the base of Q6 will short the output of IC2a to ground through the 100 Ohm load resistor.

I found that I needed a Schmitt Trigger input. It seems that when the receiver's squelch is broken, the squelch gate generated a burst of noise that caused false triggering of the ID timer. Adding the 7413 cured the problem. A logic one on the COR input is needed to key the transmitter.

Q1 is used for remote timeout reset, which can be controlled from the remote control receiver and tone decoders. A short logic one pulse will momentarily ground the base of Q2, resetting all the timers.

Q4 is the transmitter

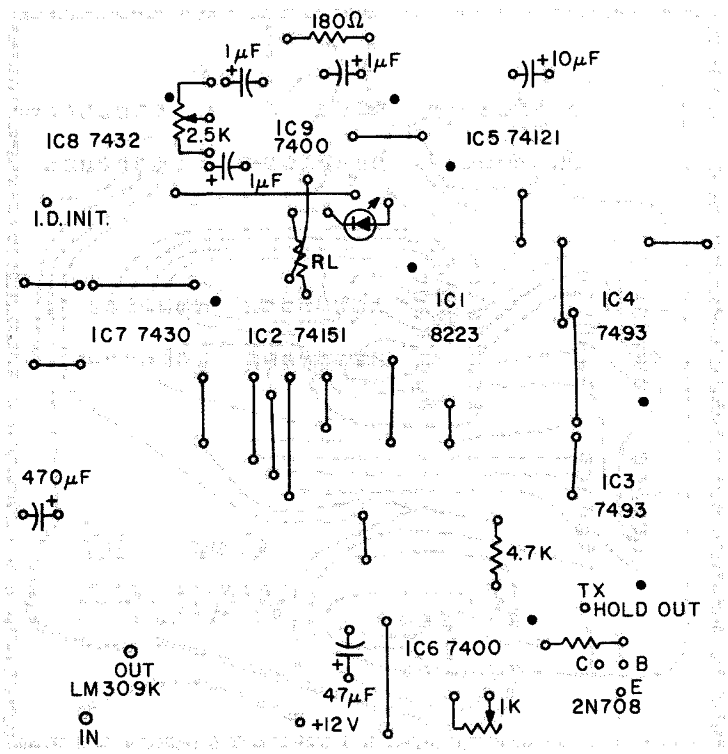

Fig. 8. Component side, CW ID. Dot identifies IC pin 1.

keying transistor. The collector is grounded when active, so this will work with relay keying or the solid state keyer I used in the repeater I built. If the transmitter being controlled uses a 120 volt relay, substitute a high voltage transistor for the 2N708 used here. I assumed a solid state repeater.

Autopatch Timer

Since autopatch is becoming more popular on repeaters these days, I decided to include a timing circuit for it, also. This circuit will allow an adjustable time delay in the receive mode (for the user). It is adjustable from about 30 seconds to over 90 seconds. If someone should access the patch and for some reason not be able to transmit again, once IC1a times out, it will automatically drop the phone line and reset itself so that one would have to re-access. The time-out on the user's transmission is limited by the normal time-out period.

Logic one inputs are required to enable and disable the timer. Not knowing what every repeater uses as tone decoders, I purposely designed it to be flexible. This will also allow any access code one wants to use, if other than * for access and # for de-access: single tone or sequential tone or whatever, as long as the circuit being used can provide a logic one output.

Not being familiar with phone patches, I decided on an uncommitted collector output. I am, of course, assuming that a phone patch has a relay in it that can be energized by grounding one side of the coil.

If this portion of the control board is not needed or not used, note that the inputs must be grounded; otherwise, the transmitter will latch on transmit. ■

Parts List — Logic Board

ICs	Resistors
1 7400	2 100 Ohm ½ W
1 7402	1 1k ½ W
1 7404	5 2.7k ½ W
2 7408	2 4.7k ½ W
1 74121	2 470k ½ W
1 NE555	1 500k Trimpot
2 NE556	3 1 Meg Trimpot
1 LM309K	1 1.5 Meg ½ W

Capacitors	Diodes
12 .01 uF disc	5 1N914
2 10 uF 16 V	
1 47 uF 16V	Transistors
3 100 uF 16 V	6 2N708 or similar
1 470 uF 16 V	

Parts List — CW ID

ICs	Resistors
2 7400	1 180 Ohm ¼ W
1 7430	1 470 Ohm ¼ W
1 7432	1 1k ¼ W
2 7493	1 4.7k ¼ W
1 74121	1 2.5k Trimpot
1 74151	1 1k Trimpot
1 8223	
1 LM309K	

Capacitors	Transistor
? .01 uF disc*	1 2N708
3 1.0 uF Mylar	
1 10 uF 16 V	
1 47 uF 16 V	
1 470 uF 16 V	

*May be needed if rf problems occur

NOTE: Negatives for photo-etching are available from the author for 50¢ each postpaid.

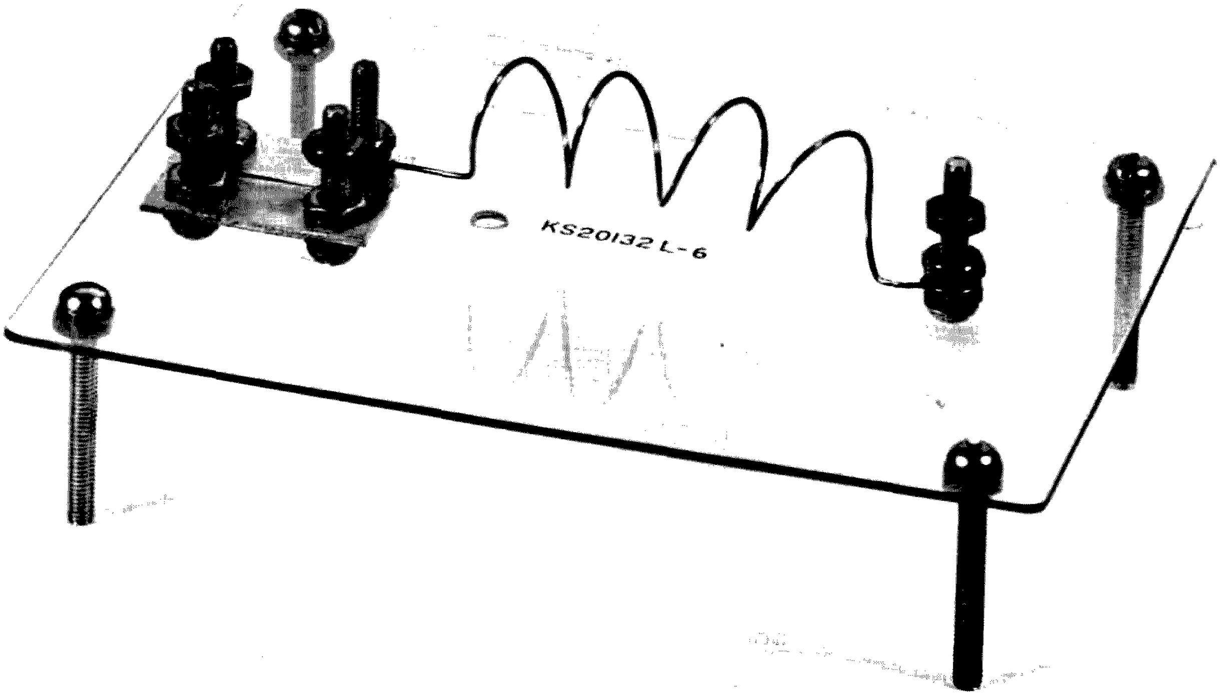

Lightning and Thunder and Other Stuff

-- can J. Bach be a relative of P.D.Q. Bach?

J. K. Bach
Ivy Hill Road
Walden NY 12586

For help with this story, I am grateful to C. S Daugherty, Teaneck NJ, Mr. and Mrs. Ashley, Walden NY, Barbara Gerard, Dale's Auto Parts, Walden NY, Shorty's Taxi Service, Walden, NY, E. Hassdenteufel, Telco, Newburgh NY, W. Green, Peterborough NH.

Over a hundred years ago, a father, mother and their two daughters sat before their fireplace, watching the dying embers. There came a bluish flickering in the chimney.

"What's that, Papa?" asked one of the girls.

"Wait a minute, and you'll see it again," he said.

Soon it came again, and took him with it when it went, without harming any of the others. One of the girls was my maternal grandmother, who was terrified of lightning all of her days.

Many don't know that heat ionizes air, and that a hot flue is a dangerously good conductor for lightning. An open window is not so good either — to stand in one during an electric storm is foolish bravado. A lightning stroke may be three miles long, *all of it* through air. It is well to avoid metal, but that does not, of itself, guarantee safety.

Many people get knocked kicking, or cold, by secondary or induced strokes. A lifelong friend of mine was in his house and saw a black walnut tree struck, and something knocked him down at the same time. With its bark blasted off, the tree later died. He also had a playmate who lagged behind a group and was struck in the open and killed.

Lightning deaths in this country run around four hundred a year, more or less. A thousand more are injured more or less seriously. I don't know if anyone has ever survived a direct main bolt of lightning — what they recovered from may have been secondary or induced shocks.

It often happens that a man's shoes will fly off when he is struck. Women's slippers are not very secure, but shoes, laced up, come off a lot harder. Lightning can do it, and frequently does. I think this is due to a violent muscle spasm.

If you like to investigate little understood subjects, try your own lightning investigation. In big cities, nobody knows what lightning is, except in the most general way; country and small town people have come to terms with it, and they can tell you stories . . . !

For instance, a close neighbor's wife saw a doorman struck from across a courtyard, and both his shoes flew off. He recovered quickly. Her husband's father, when he was seventeen, was struck and was unconscious for several hours. Thereafter, whenever an electric storm came up, he would lapse into deep unconsciousness, from which it was impossible to rouse him. At twenty-five, he married, and when his son was born, the baby used to drift off to sleep, or it may have been unconsciousness, along with his father. This was no catalepsy: They were both completely under. When the child was about eleven, he stayed awake. It is easy to think up explanations, but the passing years make it impossible to check. So nobody knows the answer, if there is one.

Another friend, who runs an auto supply business, saw a lightning flash at the very tail end of a storm which struck a locust tree. (These are frequent targets.) It spiraled the trunk more than once, jumped to a nut tree which was very close, down to a clothesline pulley and along the line, which was plastic with a steel center. Blankets were pinned to the line, and as she described it, the clothespins snapped off the line successively in a high arc like flights of arrows. The blankets fell. At the near end, the bolt burned out the telephone and its ground, knocked boards off the garage, set them afire, and simultaneously induced a power failure. She had to call the fire company, the telephone company, and the power company from a neighbor's phone and return to fight the fire.

What stuck in my mind was this one-at-a-time business with the clothespins, since I knew that lightning peaked out at 90,000 miles per second. So I asked about this again. She was less sure about the clothespins, but the ground was very muddy and held a film of oil and grease from parked cars. The blankets fell into this muck starting with the furthest one and continuing on down the line. If you have ever had a wash fall off a line — and I have — you believe her, science or no science. I never argue with facts.

At 90,000 miles/second propagation I defy you to see one end start before the other, but yet I have seen this many times and so have you and so have a multitude of people. Some of this is optical illusion — the strobe effect of ribbon or sheet lightning, perhaps. Some of it is imagination — you always see lightning strike *down*, even if it sometimes strikes *up*. In Fig. 1, next to the antenna, I have drawn a stroke of lightning as it was rendered in the middle of the last century. I don't know whether this was a convention, or whether it really looked this way to the artists of the day. Find an old woodcut of Franklin and his kite, and you'll see it shown that way. Not in real life though — no acute angles, no sawtooth. The fact remains that at times you *can* follow the progress of a stroke with the eye, and I don't care who says different. It is so, and I have seen it, and there was no mistake. The 90,000 miles/second is a *maximum*.

To continue, there was the local taximan. He was sitting in a dairy barn on a metal milking stool when the lightning rod on the barn was struck. He was knocked out, and when he came to, he saw a cow in a most un-cow-like position: flat on her belly with her front legs straight out in front of her, and her nose between her hooves. She recovered. Everything loose in the barn was upside down. Investigation revealed that the rod had been directly connected to the line of metal milking stanchions, which were embedded in the concrete floor-slab. The rod was properly grounded soon thereafter.

Some writer once pointed out that Franklin himself did not ground his lightning rods. The implication was that the old man wasn't very bright, which is a bit much. Old Ben is a hero of mine, and I happen to know that his first idea was to brush-discharge clouds and avoid lightning strokes altogether. But highly-charged clouds are swept along by the winds — the origin of sheet lightning, which strikes along a line that may be forty feet long. (This would give an apparent direction to the stroke even if it were near instantaneous.) There is no discharging such a cloud harmlessly except by a good lightning rod. Now Ben built an air shaft in his house, and suspended an iron lance in it (probably by strips of silk cloth, his favorite

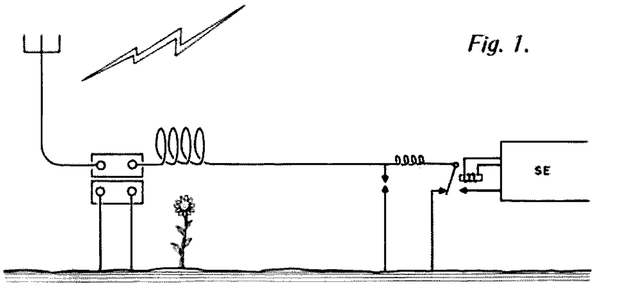

Fig. 1.

Fig. 2.

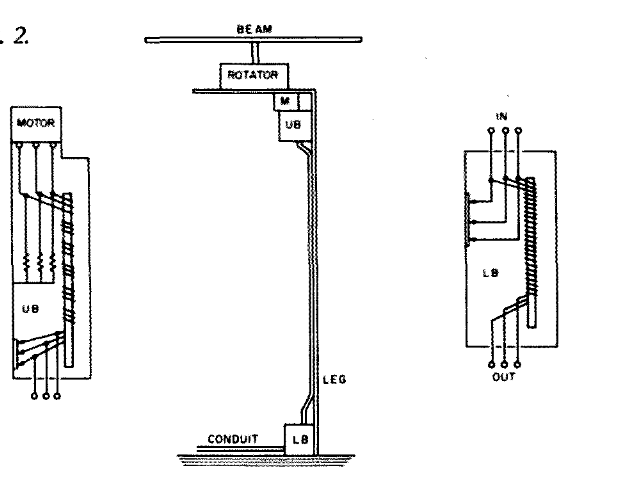

insulator) free from ground. His description makes no mention of any window, or viewing port, or peephole in this structure, but what do you think? I think he had a small window he could watch through from a rocking chair. I also think he could open this window, reach in, and charge a Leyden jar, or his own flat-plate capacitor, in fair weather from the normal voltage gradient whenever he felt like it. There is nothing in his writings to this effect, but it figures.

Franklin was no less interested in electrical discharges than any other scientist. Ask any of them. And ask them if they would attend a lecture by the old man if this were possible, and they might surprise you. As a scientist, then, he was studying discharges, and I infer that he got knocked off his chair one day and concluded that the brush-discharge theory applied only to Leyden jars. He grounded his rods forthwith. Earlier, he himself had written, "Experience keeps a dear school, but fools will learn in no other." He wasn't about to pay the tuition, himself.

Lightning comes and goes; it doesn't stick around to be studied. Aside from a few specialists, little is known about it. We not only don't know the answers, *we don't even know the questions!* When lightning strikes very close, say, within a hundred yards, there is no thunder. I have observed this myself. I also checked this with a hiker who was narrowly missed along a cliff path in the Poconos. What you get is one tremendous, ear-splitting CRACK, or explosion, and after that, nothing. No rumble, no echo, dead silence. Maybe your ears don't work very well afterward, but I have noticed the same thing with guns. Fire a thirty-oh-six or equivalent, and then listen to one across the valley and you will see what I mean. When you don't hear the rumbling thunder, you had a near miss and you had better believe it!

Sound travels at about 1100 feet per second. Five seconds between flash and thunder would indicate a mile and a little. Ten or fifteen seconds and the lightning is quite far away. But even at a mile, you sometimes get a sharp "click" simultaneously with the flash, followed by thunder later. Where does the click come from?

Obviously it comes from a pole transformer or lightning arrestor on a nearby highline, and you can hit one of them with a rock from anywhere. Nearly anywhere: Once I was really in the country, a storm came up, I got the flash/click with thunder following, and there went another perfectly good theory. I could see the nearest highline miles away.

During WW II when the 243-type air-spaced crystal holder was being developed, it was found that some plates would oscillate well in some holders and not at all in others. It was theorized that the defective holders had the wrong number of acoustic quarter-waves in them; they were redesigned, and were worse than before. After a lot of careful checking, it was determined that the sound waves had *twice their normal velocity* under the observed conditions. The formula was revised, the electrodes spaced accordingly and 243s were turned out like popcorn. So! *Two* different velocities for sound, eh? Let's call ordinary sound wave propagation O.S.W.P. and the more rapid mode, a *percussive* propagation. The O.S.W.P. takes advantage of the mass and the elasticity of the medium and is propagated very efficiently, but somewhat slowly. The percussive mode is explosive; it is driven outward from the source without regard to anything but its own force. It is not an efficient mode, since it is very rapid, and it is quickly attenuated. Does that fit the facts?

I saw an interesting submarine movie once. The boat was taking a real depth bombing. First a sharp "click," a wait, and then "Boom!" An officer explained to a passenger that the click was the detonator going off, followed by the boom of the main charge. You could tell if the explosion was near or far by the interval between the click and the boom. Sound familiar?

I have handled enough dynamite, and reloaded enough cartridges in my time to gag over the idea of an interval between detonator firing and the explosion of the main charge. Properly rationed, there is enough silliness here to supply a man for weeks. *There is no interval* between them, none that you could sense. The propagation speed of the explosion is what? – about a mile a second? – something like that, and all this stuff is together in one big drum. Having little faith in movies and their sound effects, I consulted a submarine expert I know – he has survived many depth charge attacks. He says no, it doesn't sound anything like in the movies, but yes, there is this click-pause-boom business, just as described. I haven't read anything about it, or talked about it to anyone, but again I infer that this is more of the same – O.S.W.P. and (percussive) P.P. with the percussive arriving first, but the ordinary sound wave following, and both starting at the same instant from the same source.

What's important about this? Maybe nothing. It could be important; I don't know, you don't know, neither does anyone else. But if it exists, someone should know about it. It is worth discussing.

The Encyclopedia Brittanica has a lot to say about lightning, and much of the information comes from the States, surprisingly enough. The Americana and the Collier's also have interesting sections. It is said that a lightning stroke has a diameter of 20 cm or about eight inches. What's wrong with that?

This: A flagpole is typically eight inches through. You can see the flag quite a distance, but the pole soon becomes invisible. You *know* that anything across the river is at least three miles away – still, lightning seen over there is no mere fiery thread – it has a most definite width, maybe a couple of yards across. This you can see.

Ever watch a searchlight beam on a foggy night? It goes up and is blunted like a finger, stops quite abruptly. Even as seen from the side, you get some of this effect. It

should taper off gradually, but it doesn't. Maybe that is why lightning looks so wide?

No, I don't think so. The encyclopedias tell us that the temperature inside a bolt is a little higher than that of the sun's surface, and certainly its brightness approaches the sun's also. Then it should look several times fatter than it does with *that* much light, if the finger theory applies.

I picture lightning as twisting and squirming around in a six foot tunnel of near-vacuum and high temperature and glaring light. Maybe the individual bolts are only eight inches across, but they succeed each other at very short intervals and pretty well fill the tunnel before the bolt subsides.

But no one will ever look down such a tunnel and see what I have described. Airplanes are sometimes struck by lightning, usually without harm other than a small hole burned in the skin of the plane. Pilots have said that the first time was terrifying, and the second, worse.

Why worse? I dismissed the subject, as you probably have, until this writing. The answer undoubtedly lies in the fact that the glare is so bright that the pilots can see nothing for five minutes or more – not outside, not instruments. Turbulence prevents hands-off flying, and currents of several thousand Amperes can magnetize and burn out almost anything. I shouldn't think the autopilot or radios would work very well. But the main thing is that, from any altitude, a modern plane can get *below* ground level in less than any five minutes. I think I'd give up flying, if I survived the first bolt.

We ought to get something practical as well as educational out of all this. OK, lightning arrestors. They are very old, not so old as the lightning rod, but in wide use on power lines at the turn of the century. Simple gaps have been sold as "lightning arrestors" for radio receiving antennas for a half century, but a simple gap is only half an arrestor.

When I worked for Ma Bell, I worked with a New York Tel man who had been an installer. He had a lightning trouble to fix, so he went to the house, replaced the drop wire which was shredded, and then looked for the arrestor. Now this is a book-sized slab of glazed white porcelain, with two long skinny fuses on top, and a metal screw can, which covers two carbon gaps which are the main arrestor. It was supposed to have brass terminals on it, too. Apparently the bolt had made sand of the base and vaporized the metal, since there wasn't a single piece of the thing to be found – not a sliver the size of a fingernail. The subset inside was in perfect order – he made sure of this.

By the way, the Brittanica has a line drawing of this lightning protector together with a brief description. The output of the protector (arrestor) where it goes into the house has the wires bent into a "drip loop" which is the subject of much discussion among installers. Eddie, my friend, surmised that this loop, besides dripping water off, made up half a turn of inductance, which was somehow responsible for keeping lightning bolts out of houses.

I agreed with him without reservation. It is a very low inductance, some fraction of a microhenry. Lightning is pulse stuff which seems to have an equivalent frequency of at least a megacycle. At that frequency we shouldn't expect much inductive reactance, but wait – the wave front of lightning is an extremely steep one. We are used to thinking in terms of a square wave of a few volts on a CRO. End to end, a lightning stroke may approach a BILLION volts, and there is one hellacious difference between rising six volts in a microsecond and rising, say, twenty thousand or more. Now, it doesn't have to equal the lightning voltage very far, only until the gap breaks down. Once this is well ionized, you have a pretty good short circuit and the inductive reactance is unimportant.

So far as the ground path is concerned. But it amazes me how people forget that in order to work, the inductance *must* have some current in it. (Heck, they mostly even forget to include the inductance!) What does this mean? It means that 99 44/100% of the bolt goes straight to ground, while 56/100 of 1% makes burned toast out of the front end of your transceiver or whatever. You just HAVE to account for this 0.56% because it is 0.56% of a lightning bolt, and may be sizable.

What then? I show, in Fig. 1, another arrestor at the station equipment which is not actually installed, but should be. Backing that up is a relay which is energized as long as the equipment is turned on, cutting the end-fed antenna straight through, or grounding the antenna on its back contact when released. I don't have that installed either, but I'm going to have. I have seen receivers with the front end burned up and I don't want any.

I said that nearly everybody neglects the inductors. But look for them in Telco and Powerco installations. And Radio Broadcast Transmitters. I worked a couple of years for a local BC station. Their coax cables are as big as your wrist, and the "drip" loop, or inductor, is three turns or so, each a yard across. The end is connected across the base insulator, and in parallel with this is the lightning gap. It looks like a piece of heavy strap iron, grounded under the base insulator, with a bolt at the top that faces a tower leg, spaced no more than an eighth of an inch away from it.

One morning, as the FCC requires, I was reading the antenna base currents and logging them, when the lightning gap caught my eye. While it looked heavy enough to swing on, I was a little cautious – I reached out and tapped it gently with the edge of my shoe. Not like Kojak entering an apartment, but rather gingerly. I got a big, bright, hot arc that stood for five long seconds and went out. I loped back for the transmitter at my very best lope but everything was OK; the tape was still running and there were no telephone calls. Nobody listens! I concluded that the strap was several laminations of sheet copper painted black. I know it was flexible and not very springy.

Another man I worked with had a farm, and used fence "controllers" for cattle – i.e., an electric fence. Lightning got this thing every couple of weeks and he needed a new one, or extensive repairs. I mentioned the drip loop and he wound about ten turns at the controller terminal. No more trouble.

My own lightning arrestor is for an end fed 80 meter dipole. Most lead-ins are 50 Ohm transmission lines, but this poses no problem at all. Just wind the whole business, center conductor, braid and all, in a coil. It won't even add an irregularity to your line. Maybe a gap will, though there is a coax fitting with a built-in adjustable gap that is supposed to be OK.

But how about transmitting through such a device? Wouldn't it need a gargantuan gap? Let's see . . . for a 50 W line at 2 kW Peak Envelope,

$$P = E^2/R$$
$$E^2 = PR = 2 \times 50 = 100$$
$$E = \sqrt{100} = 10$$

which I don't believe for a moment and I hope you

don't either. Obviously I'm suffering from a lack of coffee.

Ah! Much better!

$$E^2 = 2{,}000 \text{ (ah-HAH!) } \times 50 = 100{,}000$$

$$E = \sqrt{100{,}000} = 316 \text{ volts}$$

or some such, which is a lot more reasonable. I have heard the figure 8,000 volts breakdown between needle points. Spark plug gaps are a great deal shorter than this, but remember they work under high pressures. So it looks like the little fitting I spoke of will work for a full sized ham transmitter. If it doesn't, and you have to introduce a larger one, which makes an irregularity, remember please, that lightning makes lots bigger ones.

Fig. 2 is about rotators and their wiring. I don't have one of these, but if I did, I should protect it as shown. The box does not have to be steel, but steel is nice. When lightning goes down that leg to ground, there is an enormous magnetic field produced. There is no way to shield the wiring – all you can do is "drip loop" and gap it. At the motor end, I have shown some resistors to ground. These are high enough not to affect normal operation, but at the same time afford a lightning path to ground besides that of the motor insulation. I have a feeling that the windings will break down pretty easily unless there is protection. As I say, I don't own one, so this is all theory.

We don't know the whole story about lightning yet. As a child I lived across the river from Cincinnati. One evening I was treated to a celestial fireworks display like no other I have seen or heard of. So far as I could see, there was not a cloud in the sky. The arc in the lone streetlight in our block sputtered and clinked, but the lightning outshone it making it negligible. Starting at the southern horizon, the bolts crawled across the sky to the zenith, like the fiery hands of God reaching . . . reaching . . . for whom? For a frightened little boy (me), guilt-ridden as all of us then were? Not to feel guilt continually was surely arrogance, which was something else to be guilty of. Nevertheless, I watched as long as I dared, because there was no slightest sound, save the beating of my own heart and the clinking of the arc light. The lightning was completely silent, and as spooky as anything Hitchcock ever dreamed up.

I asked my parents about it. "Heat lightning," they explained. It was so far away that I did not hear the thunder it generated. Far away? Straight up? And if you look up definitions you will find exactly that explanation in modern books.

In 1885 the Washington Monument was struck several times on one occasion, and several observers testified that the strokes were absolutely noiseless. The Empire State Building often has noiseless strokes. Here it is theorized that the upward "stepped leader" was not followed by a main stroke (they don't say why) so that the violent blast is missing.

The Brittanica also mentions that a length of #14 AWG rubber-covered wire was struck by a bolt, which in some fashion completely removed the wire, leaving a tube of rubber intact. They don't say how long the wire was.

Apparently someone had doubts about all this, so he set up an experiment with the same kind of wire (Dammit, how *long* was the wire? It makes a difference!) with exactly the same results – the artificial lightning either vaporized or melted or punched out the wire insert leaving a rubber tube, intact.

I have succeeded with this story if I have convinced you only that *lightning is nothing to horse around with!* ■

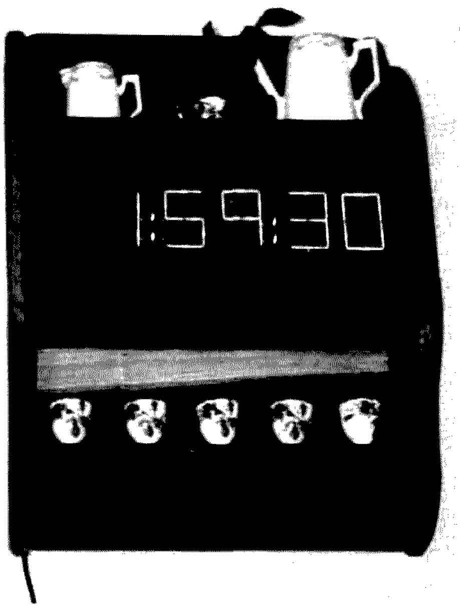

Completed wall clock with two whatnot shelves.

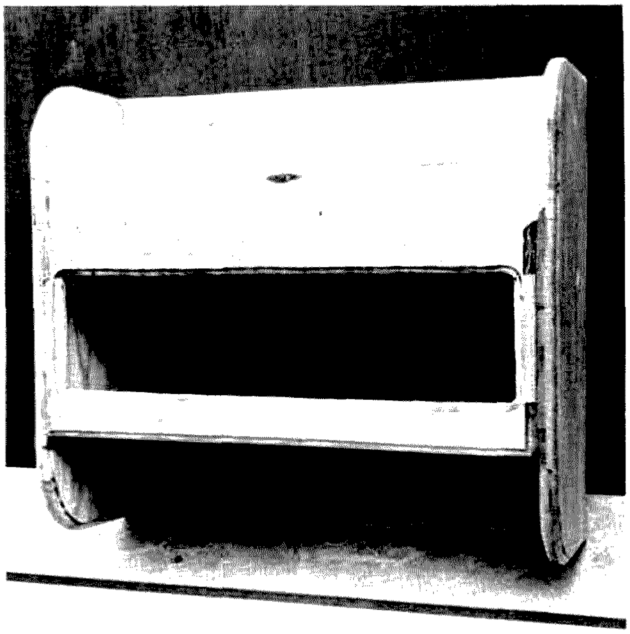

Another cabinet "in the rough," ready for sanding, finishing, and the works.

Behold the Giant Nixie Clock

--using a minimum of new parts

Jack Grimes W4LLR
P.O. Box 16004
Memphis TN 38116

The May 1975 issue of *73 Magazine* contained the article "Fat Nixies For Chronometer Nuts." I'd tip my hat, if I wore one, to anyone who makes use of a surplus bargain, and the Burroughs 7971 alphanumeric tubes are a steal on the market at the present time. When used as the display for a six digit clock, they become an eye-popping conversation piece.

Having accumulated a sizable stock of the giant nixies with clocks in mind, the *73* article was a welcome sight and inspired me to get out the old soldering iron and dust off the workbench (that is if you can call four layers of assorted junk, including, but not limited to, resistors, condensers, wire, metal drill shavings, transformer laminations, etc., "dust").

My giant nixies were acquired complete with the sockets and brackets mounted on boards. Each assembly includes two nixies, two sockets, 33 transistors, about 100 resistors, 25 diodes and 18 capacitors, plus wire.

Before I began work I reached for the Radio Shack catalog to look up the price I would have to pay for the RS2008 300 volt NPN transistors specified in the article. It quickly became apparent that the $5.00 paid for the three boards (with six nixies and sockets) was only a small down payment on the finished product. Another bottleneck (at least to me) was that a quick look through the latest flyers in the shack showed no readily available source of PNP 300 volt transistors at any price. (I never did get around to writing Heathkit.)

Since I had ordered nixies to build seven of the clocks for use as gifts (for people

who seem to have everything), I was somewhat reluctant to purchase the necessary 448 resistors and 175 transistors, when half or more of the little solid state devices would be costing upwards of $1.50 each. Besides that (now we get to the nitty-gritty), the pocketbook was slightly flat!

So I kept staring at those surplus boards with those 33 transistors in nice shining rows, and all those other parts. And I kept looking at the May 1975 issue of *73 Magazine* and at the spec sheets which came with the MM5314 clock chips. At one time, I reasoned, those same 33 transistors *had been used to drive the nixies.* So why not use them in the nixie clock?

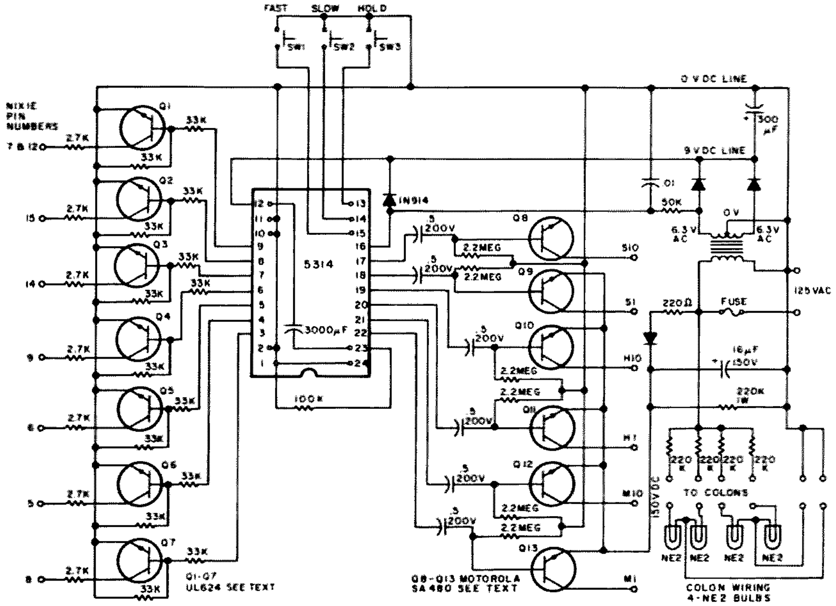

Fig. 1.

It was easy to determine that the long row of transistors farthest from the brackets had been used as segment drivers (UL624). Two transistors located at one end of the board, approximately two inches behind the only 2 Watt resistors, were determined to be PNP high voltage type. Most are Motorola SA480. A few boards used Texas Instruments, designated UL480.

But I had no way of knowing how high the voltage rating was. I am sure many readers have access to books and could easily obtain the specs, but nothing I had gave the information, and inquiries among friends and on the nets failed. So I crossed and uncrossed fingers and began experimenting with the following objectives in mind:

1. Build a clock using as many parts as possible from the surplus boards.

2. Simplify the design and eliminate as many parts as possible.

I am happy to say both objectives were more successful than I dared hope. All transistors were taken from the boards, as were a large number of resistors. Even the board itself, with PC strips removed by sanding, is used as the "board chassis."

The total number of parts has been cut approximately in half, resulting in substantial savings even if the nixies are bought less boards and it is necessary to purchase transistors. As examples, my clocks use only 13 transistors rather than 25 as specified in the *73* article, only 27 resistors in circuits associated with the driver transistors compared to 64, and the power supply has a total of 3 diodes instead of 8 and 2 resistors rather than 4. At the same time, sharpness, clarity and brilliance of the numerals leave nothing to be desired.

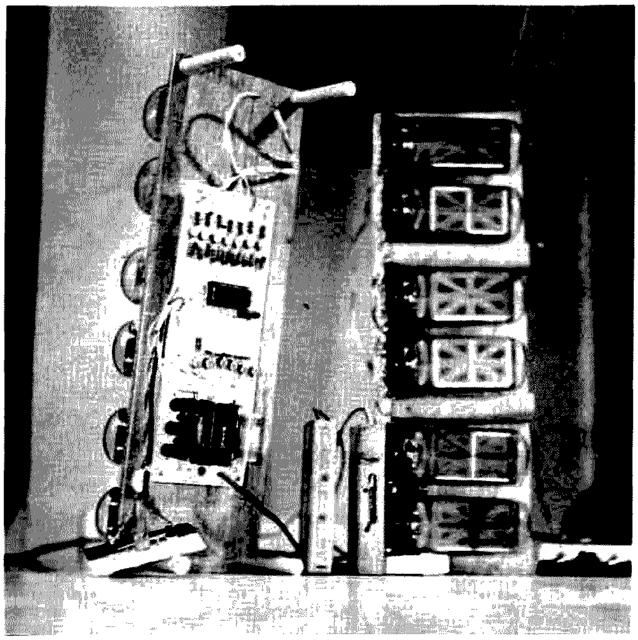

Two clocks, ready for cabinet, standing on end. A pair of colon blocks, viewed from the front and rear, stand between the clocks.

The construction of the clock is straightforward and not difficult. It actually is built in three phases or parts, which are then brought together for the finished project: the display, the brain-board, and the cabinet.

A cabinet may be built of any material for wall mounting or for table or rack. A good grade of full one inch oak, birch, walnut or maple, etc., will make a cabinet worthy of the "works" you will build. My choice was wall clocks of wood. Once this decision was made the rest of the construction fell into place.

Since the cabinets were to be of wood, it was natural to mount the nixie socket-brackets on wood. For this purpose cut a piece of plywood or ¾" plank 16½" long x 5¾" high.

The brackets are removed from the PC boards, leaving the sockets intact, and sawed off just toward the center from the mounting holes. The two bracket ends containing the sockets may now be bolted together using the existing hole. The three boards will yield three pairs of bracket-sockets, for hours, minutes and seconds.

Fig. 2. Alternate colon wiring, enabling use of resistors from boards.

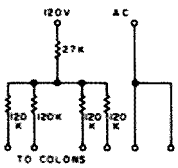

Mount with short wood screws along the bottom of the wood strip, leaving approximately one inch between pairs. (Colons will be placed in these gaps.)

You are now ready for some wiring fun – multiplexing the segment pins. This simply means connecting all like pins together. Wire only the pins used, of course. (See page 24 of the May 1975 issue of *73 Magazine* for details.) The wires should be formed to run along the back of the sockets along the bottom edge of the wood. Use seven color coded wires; a cable is formed approximately one foot long which is passed through a ¼" hole to the back of the wooden board. Six wires, also color coded, are wired to pin 13 of each nixie and are also brought to the rear of the plank.

Two colons are made from four NE2 neon bulbs. The NE2s are mounted in shallow ¼" holes drilled in two wooden blocks which hold the lights approximately even with the surface of the giant nixie display. With a small bit, drill two separate holes from the bottom of each shallow hole through to the back, for the NE2 leads. A ¼" hole is drilled from the bottom end of each block near the back and allowed to "come out" the back midway up. In this manner the leads of the NE2s may be reached and connections made. Three wires are brought out the bottom (one common and one to each bulb). This wiring is cabled with the segment wiring and also brought to the back of the display board.

The NE2s are fed from the 120 volt ac line through four 220k resistors, which gives the proper brightness to match the display.

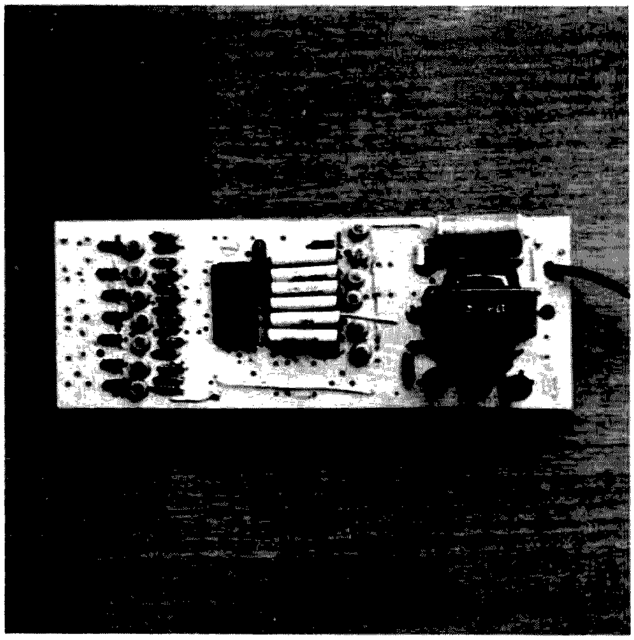

Top view of board. Transformer is mounted with half below the board. The three black spots below the transformer are three 100 uF filters, 25 V rating, paralleled. Segment drivers are at one end of the board. Digit enable is near the center.

Bottom view of board. Resistor above the transformer is the H. V. bleeder.

If it is desired to use parts from the board, four 120k resistors may be used, one to feed each NE2, and one 27k resistor to feed the four resistors. See alternate colon wiring.

With the display complete you are ready to tackle the "brain-board." There is no question that a printed circuit board would be the ideal way to wire the clock. But not having PC facilities and desiring to build only seven clocks, it seemed sensible to proceed with freehand layout and drilling. Actually I use old PC boards with the strips sanded off with a rotary sander.

The power supply should be wired first. A 12 volt center tap filament transformer allows use of only two diodes. However, a 6.3 volt transformer with a bridge does an equally good job. You should come out with approximately 9 volts dc for the clock chip. At this voltage the chip does not run even slightly warm and operates perfectly.

Experiments showed the giant nixies fire with a voltage much lower than the 180-200 volts. Using a lower voltage gives a safety margin for the high voltage transistors.

In the interests of cost and simplicity, a simple half wave circuit is used to rectify the line voltage for the 150 volt supply. A 16 mF capacitor with at least 150 volt rating is sufficient filtering. A 220k 1 Watt resistor serves to bleed off the voltage slowly when the clock is unplugged.

Writing this, I can almost hear the screams: "A line voltage rectifier! A hot chassis!"

Well, this clock has *no hot chassis*, because it has no (metal) chassis. Note in the diagram there are no ground symbols. Only a "0" volts dc line. This same line has one leg of the 120 V ac on it. But, kept completely under the board and enclosed in a wooden cabinet, it certainly does not present a shock hazard.

Once the power supply is complete and tested, the clock chip socket should be mounted in the approximate center of the remaining board space. Then mount the components, and wire everything

The bracket mounting, wiring, and colon mounting.

associated with pins 2, 10, 11, 12, 16, 23 and 24 of the chip. At this point, if you wish, you may install the chip and apply power.

Using a scope, if all is well, you should see pulses appearing on pins 17 through 22. If you do not have a scope, a VOM may be used and you will get a pulsing, variable reading on the 12 V scale from pins 3 through 9.

The segment drivers use the UL624 transistors from the surplus boards. I have never had one fail, even while experimenting. Only six of the 33k resistors are available from the boards. However, I have used 20k resistors from the base of the transistors to the IC chip with no noticeable change in operation of the clock. So this does not appear to be critical. Because of the much lower voltage and shorter duration of the pulses, 2.7k resistors are used for current limiting – all from the surplus boards.

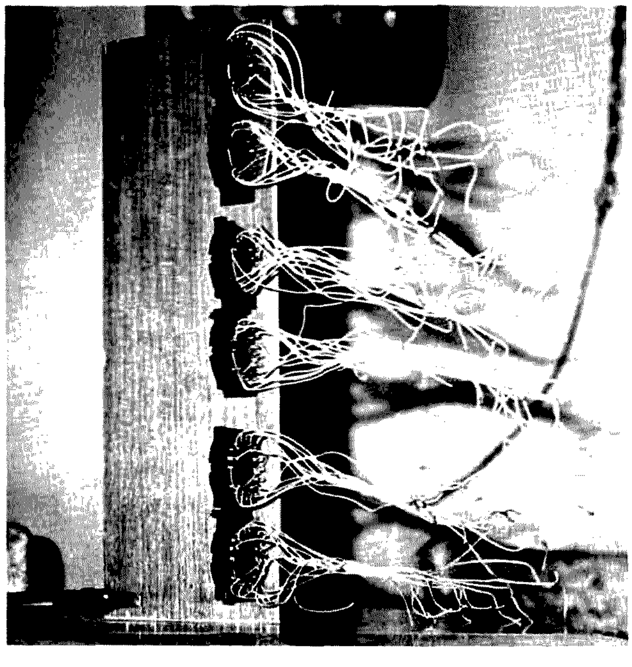

Tube sockets and brackets after removal from surplus boards and mounted on wood strip. Wires are left attached and used for multiplex wiring.

The tricky part of the giant nixie clock, as mentioned in the May 1975 article, is interfacing the digit enable pulses with the high voltage transistors. It is, of course, an absolute must to keep the high voltage isolated from the low voltage chip, while at the same time passing a pulse of sufficient intensity to trigger the transistor and provide the voltage to light the proper segments of the nixies.

Fortunately such a device to do this is in existence! It was invented quite a number of years ago. This needed device is called a capacitor.

My first effort was to use the .022 condensers on the surplus boards between the chips and base of the high voltage transistors. If one turned the lights out in the shack, flickering numbers could be seen.

An 8 mF filter, + side to the base of the transistor and connected across one of the .022 capacitors, lighted a numeral brightly. But six 150 volt filters would not be exactly cheap or space saving. And the numeral had a tendency to pulse.

Any old-timer and most new hams know it takes a very large capacity to pass a low frequency, while a very small capacitor will pass a high frequency.

So, why not raise the multiple, or scanning rate, thereby increasing the frequency and shortening the duration of the pulses? Hence the 3,000 mmF condenser in the frequency determining portion of the chip circuit. With this scanning rate, .5 capacitors pass the pulse nicely. With this problem solved, building a clock became a matter of mounting parts and wiring.

One word of caution: Be sure and short the leads of each .5 condenser together before installing to be sure there is no residual charge. A capacitor holding a charge, if connected to the chip, can knock out the device.

When first firing up the clock, you may feel something is wrong as not all numerals will necessarily light. For some reason the first digit usually comes up a "3," and the other numbers will probably not make sense. But the seconds should be counting. Press the fast forward button and run the clock through a full 12 hours. If all is well, it will straighten out and the sequence will fall into place.

Building the Cabinet

For those who may wish to duplicate the wall clock, I will give the cabinet dimensions. Whatever type cabinet you decide on, the inside space will have to be large enough to accommodate the 16½" length and approximate 6" height and 5" to 6" depth.

My cabinets are built from 1" wood and overall dimensions are 24" high, 18½" wide and 8" deep. The top of the clock forms one shelf and is 7" deep. The bottom shelf is 3" deep. The wood is finished only with Formby's Tung Oil and hand rubbed – no varnish.

There is no special grooving. Only two side panels, shelves and back, cut to fit and put together with dowel pins – no nails. A piece of glass is placed in front of the nixies, as are two 2" wide pieces of trim, reducing the opening to approximately 4 inches.

The cabinets are cut out entirely with a circular and a saber saw and finished with a sander. The only special work

is rounded corners and a groove for the glass, courtesy of a neighbor's router.

So-o-o, if you haven't already taken the plunge and built a really glamorous digital clock, why not? You'll have fun and the clock in the house (not the shack) is guaranteed to earn you plenty of brownie points with the XYL. She just might decide all that electronics knowledge you've been soaking up is worth something after all! ■

For those who may purchase the nixie tubes less boards, or have bad PNP high voltage transistors on a board, a source of a high voltage PNP transistor is RGS Electronics, 3650 Charles St., Suite K, Santa Clara CA 95050. The designation of this transistor is "P-8," the voltage rating 150 V. I have used this transistor completely in one clock and the results were perfect. The numerals were somewhat brighter. It was necessary to increase the capacity of the frequency control condenser when using this transistor. Cost of the "P-8": 30 cents each.

RGS also has several NPN transistors suitable for segment switching.

I have been substituting quite freely the resistors which are connected to pins 3, 4, 5, 6, 7, 8 and 9. Values as low as 15,000 Ohms work very well. The boards have a large number of these resistors on them. Also, the 33k resistors to ground (from the bases of Q1-7), are not critical. In general these resistors should be of higher value when substituting, while the resistors between base and IC should be substituted at a lower value. Of course, all substituted resistors (either string) should be of the same value, i.e., all 15,000, etc.

I have completed five additional clocks since writing the article.

Creative SSTV Programming

--how to put pizzazz into your show

Ralph E. Taggart WB8DQT
4515 Oakwood Drive
Okemos MI 48864

Slow scan television can, without a doubt, add the single largest new dimension to amateur radio activities since we started using phone. Unfortunately, the way in which most of us have used this new mode is far from creative. The advent of new operating conveniences such as keyboards has not improved matters; in fact, many "video" exchanges have degenerated into nothing more than typed exchanges which could be accomplished just as easily with RTTY. The goal of SSTV operation is to add a visual dimension to a QSO, and if the miracle of picture transmission fails to add anything new to the "rituals" we perform on the air, we have achieved little beyond acquiring a rather expensive novelty. There are a few creative SSTV operators around – you can recognize them because their exchanges are lively and interesting without having to resort to magazine centerfolds to keep your attention. Such a level of operating does not come about simply by acquiring gear – it takes considerable time and attention and some practice to develop operating and programming techniques that will raise you above the teeming crowds. The purpose of this article is to acquaint both new and seasoned SSTV operators with some of the ideas and techniques that will help make your pictures worth watching. Let's look at some of these and see which might be applicable to your situation.

The first area to consider is programming – what do you want to show? If the name of the game is working DX or simply seeing how many stations you can work, then it hardly pays to spend good money on a camera. Simply get a keyboard and start typing. Your countries total will mount but the QSOs will be as sterile as the typical impersonal exchange that marks so much amateur operation these days. Of course you will want a selection of ID slides and test patterns for calling CQ, 73 and all that jazz. We can also throw in ourselves, but few of us are good looking enough to keep up interest with that sort of material! There is, of course, all that gear that you have so lovingly assembled, but let's face it – my SB-102 looks very much like yours. Even if you have a piece of gear that I don't, it is

probable that I already know what it looks like, otherwise the advertisers are wasting a fortune in promotion! Your shack – the way you have piled all the junk together – is probably unique and a picture of this can substitute for a visit. Unfortunately, the roster of material in most stations runs only this far. This may thrill you to death if you are new at the TV game, but the prospect of facing nothing but such material on a Saturday afternoon when you have been in the game for a number of years is enough to make you leave the rig off and socialize with the wife and kids.

What about the wife and kids? They rank high on my list of subjects simply because they acquaint people with the family – just use them in moderation remembering the family movie syndrome. Are there other horizons? What are your interests? Are there non-obscene topics that turn you on? A photographic tour of the points of interest in your area adds a personal touch. Subjects such as a new model plane or anything from your other hobbies also brings you a little closer to the op at the other end. How about pictures from the last vacation or telling a story with pictures? The chances are the guy at the other end is used to watching endless streams of video trash; provide him with an interesting program, and at least you'll get a star in the log and maybe a friend for life! There are some people who are too busy to watch an interesting presentation. If you happen to get one of these, simply slip him your ID or type his call letters, maybe jazzed up with your leering face. He'll go away happy and the best part is that the QSO won't take much time! You can't get lessons in creativity, but look around you with the idea of saying something with pictures that you couldn't get across on phone. If you start thinking that way you will be on the right track.

A second major factor in SSTV operating is the way you use your equipment. There are several aspects to this area, some aesthetic and some technical. The technical part is easy – make sure your pictures have adequate video "swing" or contrast. There are many ways to insure this, including the WØLMD spectrum analyzer (*73 SSTV Handbook*), my own approach to budget signal analysis (*73*, January 1975), and some monitors such as the Robot and Venus which now come with spectrum analysis capability. Even pedestrian pictures look better when the camera is properly adjusted to provide a good video swing. The aesthetic part of programming concerns goodies such as lighting, camera angles, sequencing of video sources, etc. Let's look at some of these.

One of the most apparent shortcomings in most SSTV operations is the matter of lighting. The most common practice is to mount a floodlamp over the camera pointing in the general direction of the operator and hope for the best. In a typical larger room or one with dark walls, the result is a pale face floating in a sea of black – far more suitable for halloween than an exchange of pleasantries. Unless it can't be avoided, never use a single light source for primary illumination of the subject – the result will be harsh and far from pleasing. A simple light bar mounted above the camera and having at least two floodlamps is the minimum light installation you should consider. If the room has a light-colored ceiling, try "bounce lighting" – directing one or more lights at an angle toward the ceiling to provide more even illumination. If the camera can be arranged to view you against a close wall or the gear – fine – but if there is considerable distance to the nearest light surface, the background will appear black. A neat solution to this problem which I saw at W7FEN's installation was to mount a light-colored window shade on the ceiling behind the operator (as viewed from the camera). When you want to transmit live pictures, simply pull down the shade to provide a lighter background. The shade can be left up and out of the way when not in use. If the shade will be quite close to you, it should be grey, beige, or a distinct off-white color to prevent saturation of the background. If it will be located slightly further back from your normal seated position, it can be white to compensate for the additional distance. Here's another hint that as far as I know also originated with W7FEN. Control the intensity of your lights with a light dimmer or motor control. This will eliminate the need to get up and fuss with the camera f-stop; you simply dial in the light intensity required for good picture rendition. Camera and lighting angles are important as well. Profile views of the operator are generally not as pleasant as full face views – as much as people might admire your chin they still like to meet you face to face. Ideally the camera angle should be just slightly oblique along with the lights to emphasize facial contours. If strong shadows exist, fill them in with supplementary lights; light shadowing is pleasant to view, but you don't want your face to look like a lunar sunrise with extremes of light and shadow. Try to set up the camera position so that it is equivalent to someone sitting in the shack; avoid extreme camera angles. No one likes a view that looks like it originated from the ceiling, while a view of your face from the vicinity of your navel is equally unsatisfactory.

There should be less trouble with pictures of equipment and other features of the shack, for you can make these at your leisure and put them on tape for later replay. Use good camera angles and arrange lighting to avoid extremes of light and shadow. Hauling a camera around the shack during a QSO as a sort of guided tour is to be avoided like the plague. First of all, you rarely make coherent conversation as you are lugging everything around; secondly and perhaps more important, the pictures you produce this way are likely to be poorly lighted and composed. It is much easier to do it right and commit the pictures to tape, using them again when required.

For general operation, cassettes are probably the most flexible program medium. If you have a good recorder with an accurate editing counter, you can put several programs on a cassette keying up the program where required. If your tape counter is not accurate, you are better off using small cassettes (15 or 30 minutes) with a single program per side so that you only need start at the beginning of each side to have the program properly cued. The mumbling and fumbling that accompanies an attempt to find a certain set of pictures in a non-edited or poorly controlled tape will send the fellow at the other end looking for a cup of coffee or something stronger, particularly if he has heard this scene a hundred times before. Using tape, the station with a single camera can prepare innumerable programs while keeping the camera in position for live pickup during actual operations. If more than one video source is available – multiple cameras, keyboard, or flying spot scanner – the oppor-

tunities for creative programming are increased to the extent that all these sources can be utilized together in a coherent manner.

Many operators are also amateur photographers and maintain collections of 35mm slides that represent excellent potential program material. It is usually not feasible to set up the projector to work against a small screen and use the camera to pick up the picture. Either the projector or camera must usually be at an angle to the screen resulting in undesirable keystoning or foreshortening of parts of the picture. Even if the space is available to use a larger screen at a greater distance, the intensity of the projected image drops off. The solution is to use a rear projection system. A wooden frame between 1 and 2 feet square is used to support a piece of transluscent plastic. The projector is placed behind the screen with the camera set up on the other side. You can set up your slides in the proper order and use the slide changer mechanism to switch the slides between SSTV frames. This technique can be used with tape and a single camera or it can be used with a second camera while you are actually on the air. You should put the slides in backwards so they will have the proper orientation when viewed by the camera. If you have a keyboard, one of the most useful things you can do with it is to type "label frames" to be inserted between pictures to provide additional explanation of the visual material. WØLMD has designed a nifty titler circuit that will put a one line title in the actual picture frame. The letters are rather small, which makes them difficult to read under noisy conditions, but it does eliminate the need to interrupt the picture sequence.

The flying spot scanner is also a useful tool for handling routine picture material either as slides or photographs. Several designs are presented in the *SSTV Handbook*. An FSS can handle CQ and ID slides, your cartoons, and any photos you might wish to transmit while leaving the camera free for live pickup.

The key to good programming is to have a smooth flow of material. Pictures should be changed during the frame transition to avoid erratic display and poor continuity. If your picture handling mode doesn't permit such rapid changes, consider putting that particular sequence on tape so the recorder can do the job of stopping one picture at the end of the frame and starting another right before the arrival of a vertical sync pulse. It takes some practice, but you can produce excellent tapes without having to cut and paste. Usually five frames of a given subject is the upper limit. Three frames is probably optimum. Longer programs should be reserved for excellent band conditions where with proper editing technique you could probably drop to two frames per subject, thus saving 8 seconds. Remember that the fellow at the other end will be looking at a 120 line picture, so choose your subjects accordingly. Obscure pictures, such as the backside of a sleeping cockroach, may be excellent for those engaging "guess what it is" games, but are unsatisfactory for general programming. The macro-focus freaks are fond of showing extreme closeups of things like ICs and postage stamps. While such manipulations work very well to demonstrate the equipment, they can be so-so in the interest department. I don't want to disparage stamps in general; it's just that most of us have seen the common garden varieties. If you have a collection of rare or beautiful stamps, by all means use them. A note here: If you want to use macro-focus to maximum advantage, use the camera in conjunction with a suitable fast scan monitor. Poorly focused pictures are to be avoided, and this problem is more prevalent when you start playing the macro-focus game.

A final note in regard to multiple camera sources. Why not use a common sync generator for all sources — camera, FSS, and keyboard — to eliminate wasted time in switching from one source to another? Many FSS units and most keyboards are home brew. Why not take the sync signals from your commercial camera and use these to control the other video sources? Broadcast stations stay in sync by using a common sync source for all video sources, and you can do the same. This sort of thing is optional, but it does add a nice touch. Those of you out there who like to tinker with the gear might consider the possibility.

The key to a high class operation is to choose interesting pictures and handle them with the maximum versatility and technical expertise that your equipment permits. Putting together a quality video operation is not only a challenge — it will mean that other operators will want to work you as often as possible and perhaps pick up some hints for their own stations. We are only just beginning to learn to use this new dimension and many new techniques will emerge as we work on the subject. At any stage, however, there is no more excuse for sloppy picture technique then there is for a sloppy fist or ham-handed phone operation. That kind of operating will always be with us, but let's see if it can stay in the background as SSTV forges ahead! ■

Don't Build This Project

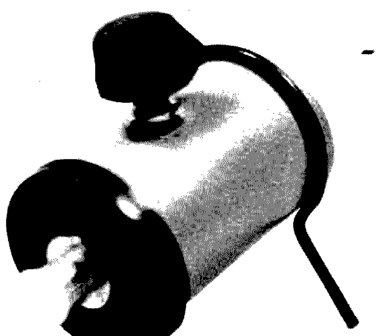

--watch for my next...

James F. Reid W8LWS
4 Lawn Street
Ashley OH 43003

When I first got this brainstorm I thought I would earn a place in hamdom for building the world's smallest field strength meter. It may not be the smallest but it ought to win an award for something. Like many other projects that should have suffered an early death, this one started with a surplus of 35 mm film cans and the question "What if . . . ?" I might also add that this project started with a deficiency of thought. The meter is a tuning meter offered in many hobby catalogs and said to have "hundreds of uses." Residence in a 35 mm film can is not one of these uses. If you should be so foolish as to buy one of these meters you will probably find that it has an internal shunt resistor which will reduce its sensitivity for this use. This calls for a little creative destruction. Using a drill bit held in your hand, carefully drill a small hole near one end of the resistor. Then, using a small instrument (a crochet hook works well), carefully break the wire going to the resistor. The next step is probably to go out and buy another meter and try again – or give up right now. In case you were lucky and have finally modified the meter, seal the hole with model airplane glue. Cut a hole in the bottom of the film can to fit the meter (lots of luck). The film cans are made of plastic and are very soft. Start the opening with a carefully drilled hole and finish it off with a pen knife. Have plenty of film cans on hand before you start this, and run cold water over your head after every third try. If you have gotten this far you will realize that the only way to secure the meter in the can is to glue it there. Don't glue it yet! You still have a good deal of teeth gnashing before you're ready to tie things down.

The next step involves finding a small pot to fit in the can. Don't try to buy a new one. They're very expensive. Take the film can and the meter to the nearest surplus house and find one that will fit without pounding. Spend at least an hour deciding just where you are going to drill the hole for the pot. If you have committed a single sin within the past fifty years the hole will end up in the wrong place and you won't be able to get the meter and the pot in the can together. If by some miracle you have gotten this far, glue the meter and mount the pot.

You will notice that I have a vertical antenna on the back of the unit. This was, perhaps, the easiest part. Mount a female phono connector in the cap of the film can (it's easier if you take the cap off first). The antenna proper is a piece of coat hanger wire. Make a small right angle bend in the bottom of the wire and solder it to a male phono connector. As most do-it-yourselfers will tell you, you cannot solder to a steel wire, such as a coat hanger, without first invoking several deities. In my case I scraped the wire clean and then used acid core solder (horrors!). If you are fastidious you can wash the acid residue off with soap and water. Now beg, borrow or steal the teeny-weeniest parts you can find to complete the circuit. Carefully plan parts placement and the order of soldering so things will fit (how's that for a cop-out?). The only thing yet to construct is the wire feet, which were made out of the same coat hanger wire (see Fig. 1). Do not try to use the film can as a bending form for the circle of the wire feet. A flashlight battery works fine for this and is much sturdier than the film can.

This field strength meter sits on my desk and is noticed and commented on by practically no one. The only comment it ever got was from a female visitor who said she thought it was "cute."

Don't build this unit. Have a cold beer instead. Watch for my next project . . . an electronic whoopee cushion. ■

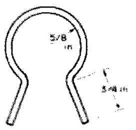

Fig. 1. Feet.

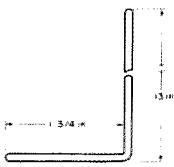

Fig. 2. Antenna.

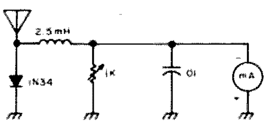

Fig. 3. Circuit diagram.

Hank Olson W6GXN
P.O. Box 339
Menlo Park CA 94025

CW Regenerator/Processor

--also has TTL output for digital work

In an article in 1964, W6OI described a device called the "Paine Killer," which was designed to create a clean tone output from a relatively noisy CW signal from the audio output of a communications receiver.[1] The circuit utilized tubes and a relay, as did most such equipment of the day. Correspondence with the author indicated that he had every intention of redoing the Paine Killer using semiconductors; he may have done so, but it never came to my attention. My own plans to build a more modern version of W6OI's circuit were shelved in the "must get back to that some day" category.

A new application brought the whole idea back to life; a fellow ham wanted to build an automatic Morse code printer and needed a device to turn the noisy CW output of a receiver into TTL "ones" and "zeros." This had been done before in reference 2 by a circuit composed of five discrete transistors and 3 diodes, but the circuit didn't allow as much flexibility as I desired for experimentation. By using op amps and carefully separating functions, the IC circuit of Fig. 1 evolved.

Note, in Fig. 1, that in each of the three op amps we have the option of using voltage gain or not, as we choose. The first op amp, around which is built the "clipper," is operated at a gain of XII. When the *peak* audio input voltage exceeds about 0.45 volts, the output of U1A (pin 3) is at 7 volts peak. Since the inverting input of U1A (pin 1) is a virtual ground, the output voltage is effectively across the two inputs of U1 (pins 2 and 3). Note that only pins 2 and 3 of U2 are used, because this inexpensive op amp is being used as a matched pair of 7 volt back-to-back zener diodes. When the output of U1A attempts to exceed about 7 volts peak (either plus or minus), U2 goes into zener breakdown, lowering the gain of the amplifier built around U1A (by effectively putting a resistance in parallel with the 10k negative feedback resistor), so the clipper prevents the output of U1A from ever exceeding a (±) voltage of roughly 7 volts.

U1B is the heart of an

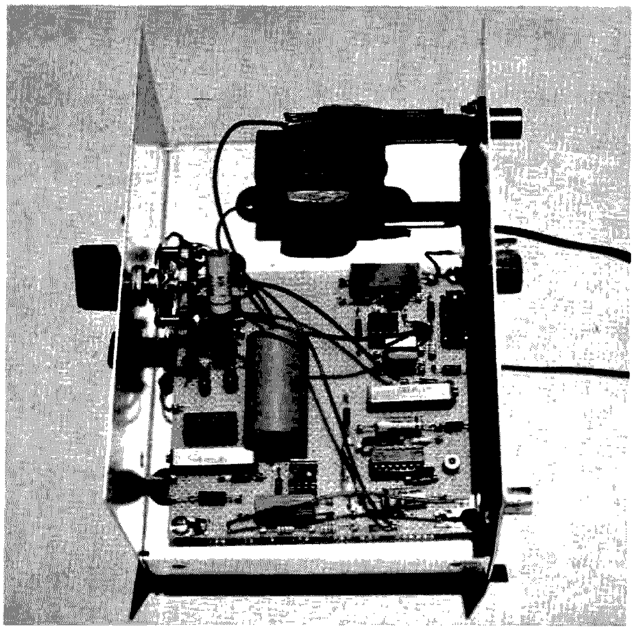

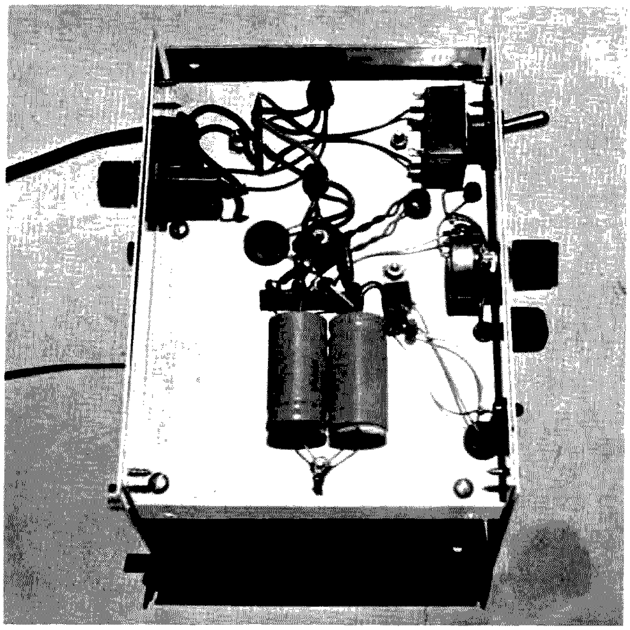

active bandpass filter with unity voltage gain, centered at 800 Hz, with a Q of 4. The design of this active filter is beyond the scope of this article, but can be found in reference 3. The Q being 4, of course, means that the filter is 800 Hz/4 or 200 Hz wide at the -3 dB points, that is, where the voltage response is down to 0.707 of its maximum value.

Around U3 is built an injection locked oscillator. The oscillator is basically a phase shift type, with the gain set at a value lower than that which will sustain oscillation. Since the non-inverting input (pin 13) is not involved in the oscillator feedback circuit (except for the requirement of being grounded via some finite impedance), it may be used as a convenient input port for external oscillator injection. The trick here is to increase the gain of the oscillator (adjust the 500k trimpot) with *no* audio injection, until oscillation is sustained; this oscillation should be near 800 Hz. Slight adjustment of any of the three 0.01 uF capacitors in the RC feedback network can be used to put the oscillator "right on." The oscillator gain can then be decreased until oscillation stops. An 800 Hz input signal can then be applied, and the injection level pot increased until oscillation starts again. The oscillation should only persist when an 800 Hz signal is present at the input.

The output of the injection locked oscillator is rectified by D1. The detector load time constant of this diode detector is approximately 5 milliseconds, which is a short enough time constant to allow reception of virtually all Morse code speeds. The dc level across part of the detector load is fed to U4, an LM311 voltage comparator. When the dc at pin 3 of U4 is more positive than that on pin 2, the output (pin 7) is "low." Since the voltage on pin 2 is set by the "voltage trip level" pot at (say) 1 volt, a zero dc voltage at pin 3 causes the LM311 output to go "high." A 10k resistor from pin 7 to pin 2 provides hysteresis and noise immunity to the comparator. The LM311 is capable of

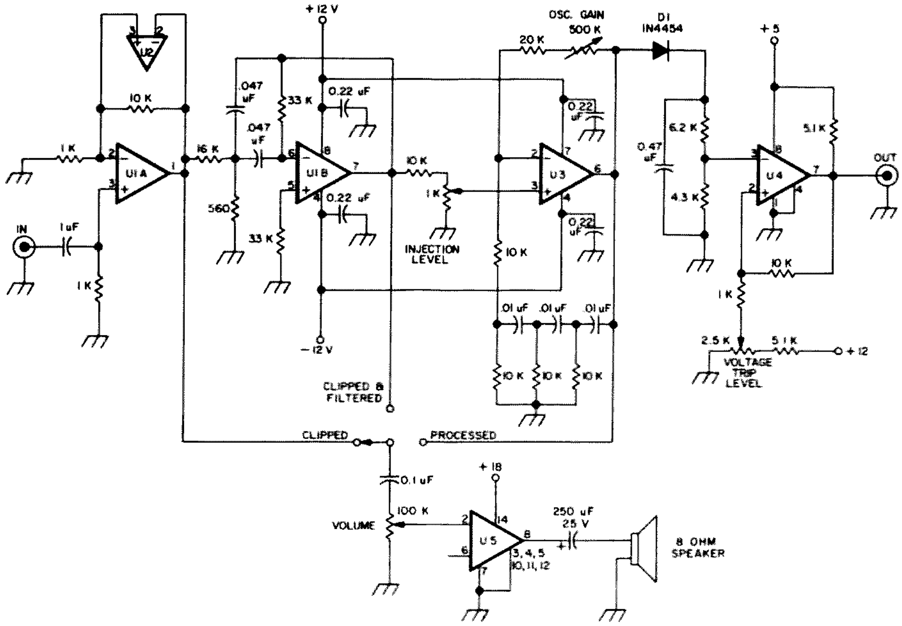

Fig. 1. D1 – 1N4454 or 1N914; U1 – National LM1458N or Motorola MC1458P; U2 – National LM709CN or Motorola HEP-C6103P; U3 – National LM741CN or Motorola HEP-C6052P; U4 – National LM311N or Motorola MLM311P1; U5 – National LM380N. All capacitors 50 V mylar except where indicated.

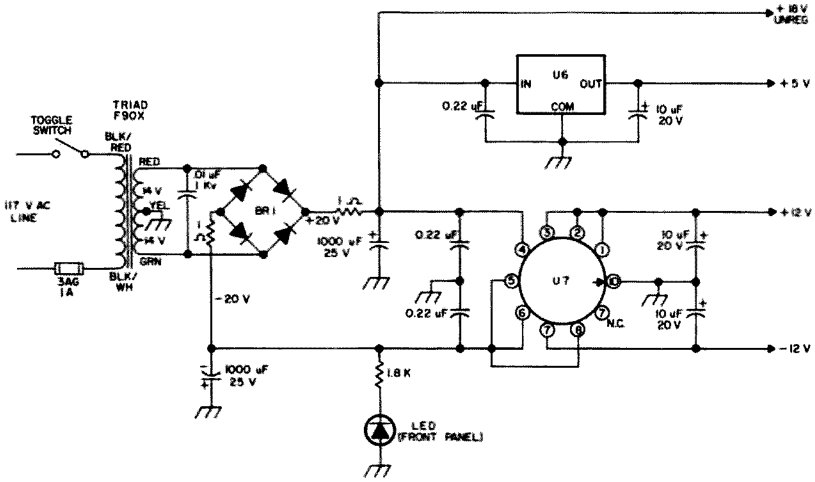

Fig. 2. U6 — National LM341-5 or Motorola MC7805 or HEP-C6110P; U7 — National LM326H (with T05 finned dissipator clip-on); BR1 — Motorola MDA920-3 or HEP-R0802 integrated bridge; LED — HP5082-4882 (Hewlett-Packard) or Motorola HEP-P2000.

driving TTL or DTL logic directly, if a digital system is to follow this unit. In such cases, the 5.1k load resistor may be omitted, since only current *sinking* is required with these logic ICs. If the digitized output is to be used to drive a pen recorder or a logic family like RTL or CMOS, the resistor is required.

U5 is a simple audio amplifier to allow the CW signal to drive a speaker directly. The National LM380N audio amplifier IC used here requires fewer peripheral components than most such ICs, operates on the unregulated + voltage at hand, and will drive an 8Ω speaker. The input to this audio amplifier is selectable from three points in the processor circuitry: following the clipper; following the clipper and bandpass filter; or following the clipper, bandpass filter, and injection locked oscillator. Thus, one may listen to as much or as little of the processing as he desires for each particular signal.

The power supply for the CW processor produces +18 volts unregulated, +12 volts regulated, +5 volts regulated and -12 volts regulated. The ±12 volts is provided by a special dual regulator IC by National: the LM326H. The +5 volt regulated is provided by one of the simple three terminal regulator ICs now widely available from several IC suppliers. The basic bridge rectifier is one of the integrated types from Motorola, for simplicity of construction. The power indicator is an LED type for long life, and operates at 10 mA from the -18 volt unregulated bus.

Since the CW processor has an input impedance of about 1000 Ohms, it can be driven by the output of nearly any receiver. It is a good idea to substitute a resistor of the nominal speaker impedance of the receiver, and then connect the processor across that resistor. For 4, 8, and 16Ω speakers, the additional 1000Ω will cause no appreciable mismatch. For a receiver with a 600Ω output impedance (like the R390A), a resistance of 1,500Ω would be used, so that the parallel combination comes out 600Ω .

In operation, when one is in the "clipped" position, the audio should sound pretty much as it would from the receiver by itself. The only difference should be that large impulsive noises are limited. The roar and grind of received background noise will be just as fatiguing as ever, however. In the "clipped and filtered" position, a CW signal (properly tuned to an 800 Hz beat) will take on a "soft" sound, and the grinding background noise will be considerably decreased. Finally, in the "processed" position, a CW signal (properly tuned to 800 Hz) will appear to "pop in and out" with slightly off-frequency heterodyne signals in the background at a considerably reduced level. If the oscillator gain control is set too close to the verge of self-oscillation, incoming noise will give an oscillator output that sounds much like a narrow crystal filter "ringing" with noise input. Too high an injection level will cause the background off-frequency signals to be objectionably high. The user must make the final compromise in setting these controls on a subjective basis. ■

References

1. Paine, J., "The Paine Killer," *CQ*, May 1964, p. 33.
2. Gonzales, C., "An Automatic Radiotelegraph Translator and Transcriber," *Ham Radio*, Nov. 1971, p. 8-23.
3. Tobey, Graeme, Huelsman, "Operational Amplifiers, Design and Application," 1971, McGraw-Hill, Ch. 8.

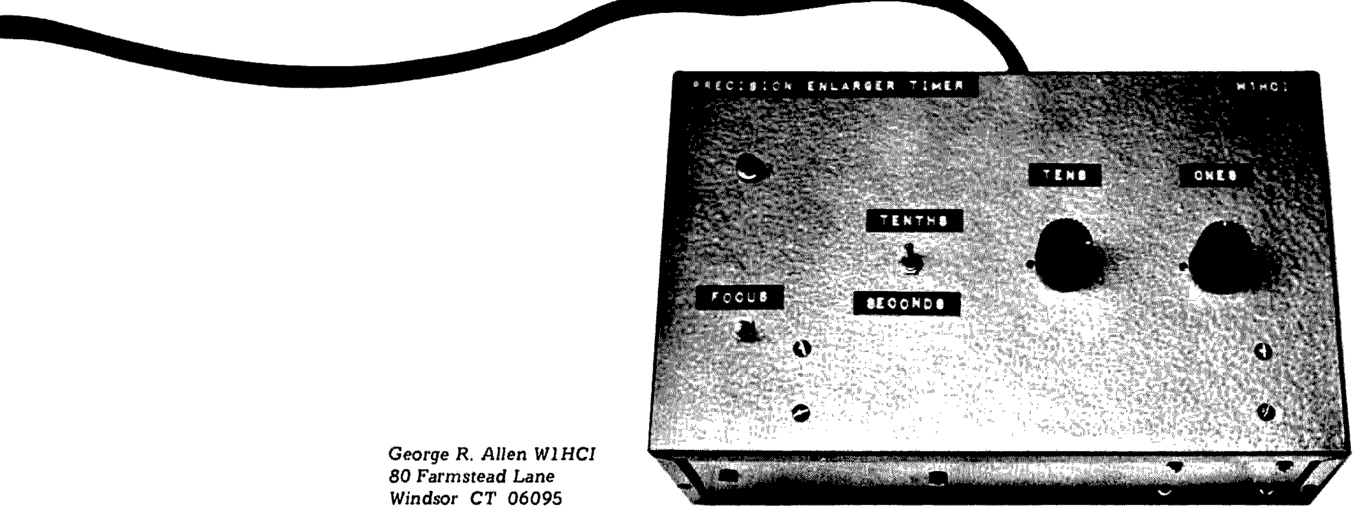

George R. Allen W1HCI
80 Farmstead Lane
Windsor CT 06095

Dependable Timer

-- for darkroom, repeater, etc.

This article describes a 60 Hz, line frequency based precision interval timer designed for use as a repeater timer, a photographic enlarger timer or general purpose timer where accurate, consistent time cycles are required. It is programmable by switches, is reliable, and requires no alignment or adjustment. It is accurate to ± 1/60th of a second.

While numerous articles have been published on simple interval timers, the majority of these timers have major drawbacks of one type or another. Timers using the 555 chip are subject to false triggering in a lot of cases. UJT timers such as those I described in my article "Simple Repeater Control Timers"[1] are temperature sensitive and will suffer a change in time interval as the temperature varies. This is especially annoying for repeater timers where the "three minute time" interval gets shorter and shorter as the temperature gets colder. In addition to these drawbacks, any timer which uses an RC network as the time determining network will suffer from problems when long time intervals are required, since the RC network becomes a high impedance network in this instance. Internal resistance in capacitors and high resistance flux shorts will

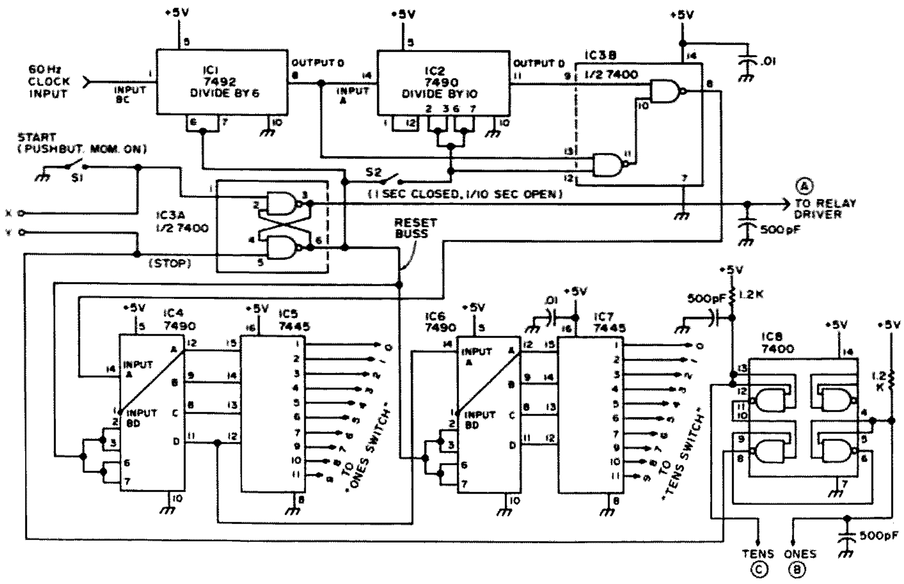

Fig. 1. Basic timer circuit.

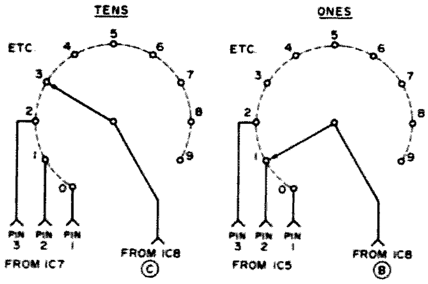

Fig. 2. Switch wiring.

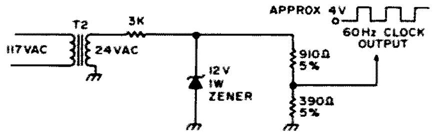

Fig. 3. 60 Hz clock.

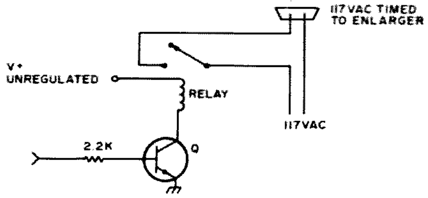

Fig. 4. Relay driver.

create havoc with these high impedance circuits. Furthermore, in cases such as an enlarger timer where it is necessary to select different time intervals, problems arise with selection of precision timing capacitors and resistors, or problems arise in that each timing range must be adjusted.

The primary disadvantage of the circuit described in this article is that it is time consuming to wire up 8 integrated circuits. The advantages, however, are numerous. This timer does not suffer from any of the problems previously mentioned. It will maintain its accuracy over a temperature range of 0°C to 70°C and will operate over a range of −55°C to +125°C merely by using the next better grade of IC (military grade). It takes no special skill to build and requires no special equipment to align. In spite of the fact that the basic circuit uses 8 ICs, the timer is not expensive to build. The cost of the 8 ICs is $7.50; the two good quality switches will run about $9.00. If you have a good junque box, there should be little additional expense.

Theory of Operation

This precision interval timer is not a complex device. It is merely a counter that counts pulses in either one second or 1/10 second intervals. A pair of switches is used to set the desired number of pulses to be counted. When the counter has counted the number of pulses set on the switches, the counter stops. The eight integrated circuits perform all functions needed to do the counting and to determine if the desired count is reached. The 60 Hz power line through a 24 V ac transformer and associated circuitry is used as the "clock," a source of pulses occurring at a 60 Hz rate (Fig. 3). The 60 Hz line frequency is accurate when obtained from commercial power lines. You can prove this to yourself by determining the amount of error in an electric synchronous clock over a month's time. The percentage of error is a small fraction of a percent. A dropping resistor, a zener diode and a voltage divider network are used to provide the required 4 volt pulses.

The 60 Hz pulses as they come from the clock are divided by 6 in IC1 (Fig. 1), producing a train of pulses occurring at 1/10 second intervals. For time intervals of short duration, these 1/10 second pulses are counted directly. A 7490 decade counter (IC2) is used to divide by 10 to give a stream of pulses occurring at 1 second intervals. This 7490 is switched in or out of the circuit by a series of gates in IC3, a 7400, depending on the setting of switch S2. If S2 is closed, counting will be by 1 second intervals. If S2 is open, counting will be by 1/10 second intervals.

The count is started by momentarily pressing the start button, S1. This "sets" the set-reset flip flop made from gates of IC3A, a 7400. At this point, all counters are reset and ready to count, and the relay is turned on. IC4, a 7490, is used to count by ones and deliver a BCD output to the 7445 decoder, IC5. The tens output of IC4 goes to the input of IC6, for a count by tens. IC7 decodes the BCD output from IC6. The outputs of the 7445 BCD to decimal decoder will sink current or go low when the proper count is reached. If

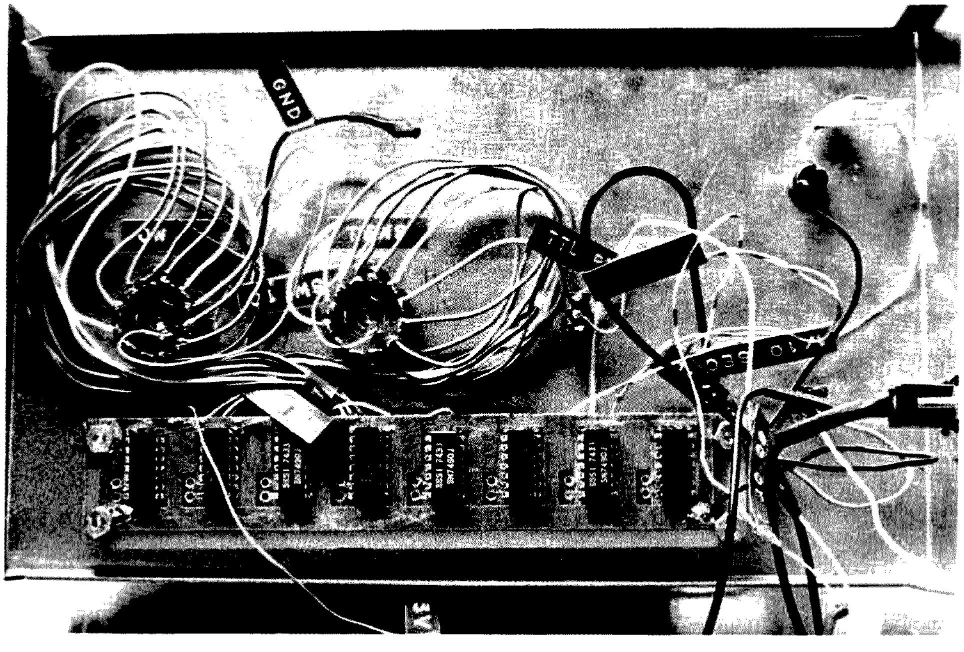

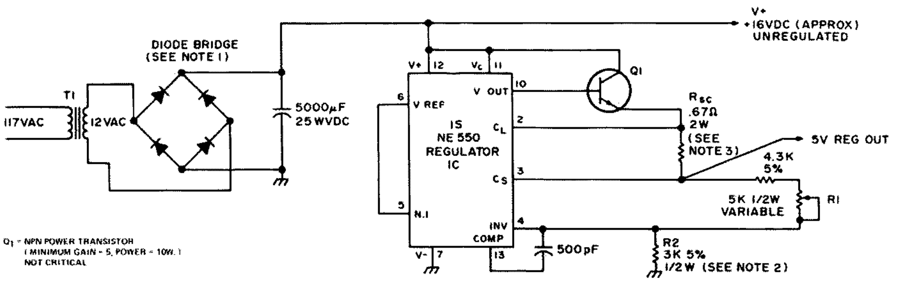

Fig. 5. Power supply. Notes: 1. Use either four 1A 60 piv diodes or an inexpensive diode bridge unit. 2. Using fixed instead of variable resistance, R1 should be 6.15k 1% and R2 should be 2.97k 1%. Using circuit shown, adjust for 5 V dc out. 3. Use four 2.7 Ohm ½ W resistors in parallel.

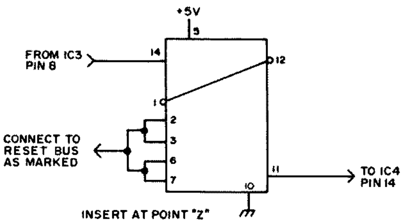

Fig. 6. Increasing time interval by factor of ten.

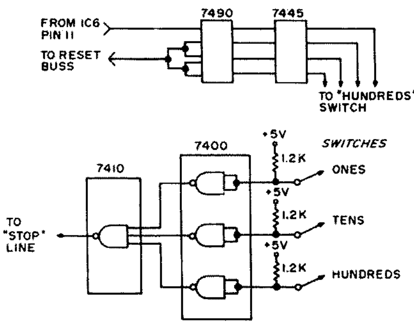

Fig. 7. Adding an extra power of ten with switch.

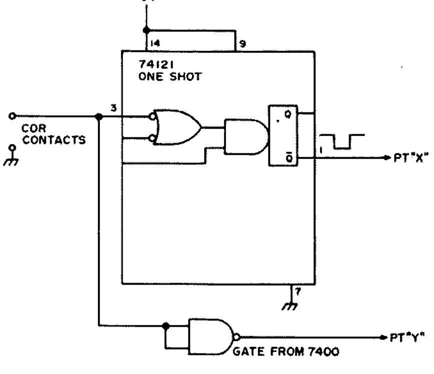

Fig. 8. Repeater timer interface.

you were to connect a low current lamp from +5 V to the "9" output on one of the 7445s, the lamp would light whenever a count of nine were reached. A series of gates is used to logically "AND" the switch selected outputs of the two decoders together to produce a stop pulse. When a stop pulse occurs, the set-reset flip flop in IC3A is reset, turning off the relay and turning off and resetting all counters.

The basic circuit as shown in Fig. 1 can be used in any environment where manual operation may be used. I used my timer as a high quality photographic enlarger timer. I merely plugged the enlarger into the 117 V circuit switched by the relay.

In any case where automatic start or automatic reset is required, the two connections X and Y should be used. Grounding point X will start the circuit and grounding point Y will reset the circuit before the timing interval is complete.

In order to use the circuit as a repeater timer, some minor additional circuitry is required. The circuit in Fig 8 is connected between the COR and points X and Y. The contacts of the relay are connected to the push to talk circuit. This simple circuit in Fig. 8 delivers a fast pulse to the start circuit when the COR contacts are closed. When the COR contacts are open the stop line is grounded, resetting the timer and turning the relay off. In operation, the switches are set to the "time-out" time desired. If the input signal remains on for too long, the time interval will be passed, a stop pulse will be generated and the relay will open up.

Note that the basic timer will time to 99 seconds, an interval which should be long enough for most applications including a repeater time-out timer. In the event that a longer time interval is required, the time interval may be lengthened by a factor of ten by inserting an additional 7490 integrated circuit into the circuit at point "Z" as shown in Fig. 6. If you wish to program this timer to three significant digits, rather than the two provided, then use the circuit in Fig. 7 instead, to add on one more switch and an additional power of ten. Note that only one additional 7490 may be added into the circuit using Figs. 6 or 7 without increasing the driving capability of the set-reset flip flop in IC3A.

The power supply is not a critical item. Feel free to use other circuits such as circuits using simple three terminal regulators. The eight ICs and the relay draw only 250 to 300 mA, so a fancy supply is not required. The circuit used is the one recommended by Signetics.[2]

Construction

Most builders have a tendency to cram too much into too small a space. For that reason I used a big 16x6x3½ inch minibox. If you use what is available from the junque box, you will probably need all the room available.

In my unit, I mounted the power supply, the relay, the relay driver and the components for the 60 Hz clock on the bottom of the chassis. I then used a piece of IC breadboard to mount the ICs on, and then mounted the PC board and the switches on

the top as shown in the photograph. You may make your own PC board or you may use a breadboard such as Vero #11821, available from Cramer for $7.35. If you wish you may also use Vector board or the equivalent.

When you are wiring the basic timer, you will want to consider the question of whether or not to use IC sockets. In my unit, I wired to the ICs directly with sockets. If you use surplus ICs or have a habit of blowing ICs, then use sockets. Remember that sockets are expensive and decrease the overall reliability of your unit. After completing all solder connections to the basic timer board, clean the board well with a toothbrush dipped in Tri-Clor-Ethylene or similar solvent. Clean the board until all traces of flux are gone. Flux that remains on the board may cause trouble initially. If it doesn't cause a problem right away, it will later on.

The only components which are critical are the switches. In this circuit, the switches handle very little current; thus there is not enough current being switched to keep the contacts clean. Because of this, it is important to use a good enclosed switch, or a switch made for IC work.

Conclusion

The timer described in this article has been used primarily as an enlarger timer in the darkroom. It has been successfully used for quite some time now. I have also tested it as a repeater timer for an experimental repeater which we worked on in the Hartford CT area. If you follow the hints in this article and make no wiring errors, it should work the first time. Good luck. ■

[1] G. Allen, R. Sobus, *Ham Radio*, Sept. 1972, p. 46.
[2] *Integrated Circuits*, Signetics, 1972, p. 6-47.

Anthony R. Curtis K3RXK
246 Woodland Drive
State College PA 16801

What's Up on 156 MHz?

--meet the marine world above 2m

The tide was out and the digital depth sounder buzzed an under-seven-feet warning in the cabin of the sloop *Freelance* as I cranked over and warmed up the diesel. Overhead, beside the companionway from the cockpit, the marine VHF FM rig chattered with Saturday morning pilots looking for signal reports.

I pushed in a button marked WX-2 on the transceiver and a continuous weather broadcast from Washington told me it would be a sunny September day with a peppy 12 nautical-miles-per-hour breeze. Depressing a red priority button on the Hy-Seas 55 marine rig brought its receiver back to channel 16, the emergency and general calling frequency monitored by all boats on the Bay. A quick cracking of the squelch verified the transceiver was receiving.

The depth sounder transponder, mounted in a hole through the hull under the bow of the single-masted sailboat, triggered a buzzer in the cabin as small waves got behind the seawall of the marina and rocked the boat. Whenever the transponder-to-bottom distance was less then seven feet, the in-cabin buzzer sounded.

Climbing the companionway stairs out of the cabin into the cockpit, I stationed myself behind the pilot wheel and slipped the diesel into reverse. The 31-foot fiberglass sloop chugged backwards out of slip 91. Clear of the moorings, I put the helm hard over and powered forward into open water of Annapolis harbor.

I glanced at my chart of the harbor waters and compared depths marked on that map with sounding depths being read out on a digital display in the cockpit. Motoring ahead to a point off the Severn River, I turned to starboard, facing the giant naval radio towers on Greenbury Point and the wide harbor mouth opening into Chesapeake Bay.

I leaned back down the companionway into the cabin and killed the diesel. Reaching up, I listened again to WX-2 on the marine radio for a prediction of wind speed and direction. The broadcast outlook appeared to compare correctly with indications of my red yarn wind telltales tied halfway up the mainmast shrouds. I punched the radio back to channel 16. The Yaesu FT-101-B HF transceiver was lashed to the navigating table in the cabin and my Wilson two meter handheld was strapped to the cabin bulkhead in arm's reach of the cockpit hatch.

With WN3AIQ maintaining the helm in the direction of the Bay, I went on deck to free the mainsail and run it up smartly. I winched the jib sheet to a moderate tension on the sail as we moved on the wind. The 5/8 wavelength VHF gain antenna 40 feet above on the masthead bent slightly toward the stern in the wind.

Parked in the Bay ahead were three huge freighters and a tanker, bound for Baltimore harbor. WN3AIQ turned up the volume on the marine rig and switched to commercial channels to see what the sailors from foreign lands were talking about (see Table 1 for uses made of different VHF FM marine radio channels).

A Greek freighter had sent a dozen crew members into Annapolis on shore leave. They were returning in a large orange dinghy. One was talking with the bridge of his ship, using a handie-talkie like the two meter HTs. We sailed straight out into the Bay toward Kent Island to inspect the Greek reboarding operation.

Circling the freighter, not an easy task under full sail, we headed south toward the Thomas Point Lighthouse. The tide was still going out so we moved down the Bay at what we calculated was a rapid seven knots. That's when eavesdropping on the marine channels got exciting.

The freighters were behind us, and we felt guilty about not monitoring channel 16 so we switched back to that frequency (see Table 2 for VHF FM marine radio channel numbers and their corresponding frequencies).

Almost immediately we heard, "Coast Guard Annapolis. Coast Guard Annapolis. This is *Sea Scraper.* The yacht *Sea Scraper.* Whiskey Zulu Yankee Four Nine Six Seven."

The quick response was, "The yacht calling. This is Annapolis Coast Guard."

"Coast Guard. We're aground on shoal near Thomas Point Light," *Sea Scraper* came back. WZY-4967 was his FCC-assigned VHF FM marine radio call letters.

"Can you go to channel 22?" the Coast Guard radio officer asked.

"Yes, we can. This is *Sea Scraper* going to channel 22," the yacht skipper replied before QSYing to the Coast Guard channel.

The Coast Guard radioman said on channel 16, "*Bay Chaser.* Coast Guard Auxiliary Vessel, *Bay Chaser.* This is Coast Guard Annapolis. Come in."

Three long-time Bay sailors, volunteers in the Auxiliary, had been cruising in their power boat in the Bay off South River. "Go ahead Annapolis. This is *Bay Chaser.*"

The Coast Guard asked if *Bay Chaser* would QSY to channel 22 to establish communications and help out in the *Sea Scraper* emergency. *Bay Chaser* left channel 16. WN3AIQ switched our 55-channel marine rig to channel 22 to listen in.

Rendezvousing on channel 22, the Coast Guard explained the problem to *Bay Chaser. Sea Scraper* had ven-

Function	Channel Number	Frequency MHz Ship Transmit	Shore Transmit	Point-to-point	Kind of Traffic
distress, safety and calling	16	156.8	156.8	ship to ship ship to shore	distress and calling
intership safety	6	156.3	156.3	ship to ship	safety
navigation	13	156.65	156.65	ship to ship ship to shore	locks, canals, pilots, bridges
environment	15	--------	156.75	shore to ship receive only	environmental, hydrographic
state control	17	156.85	156.85	ship to shore	governmental secret
port operations	12	156.6	156.6	ship to ship ship to shore	US Coast Guard
	14	156.7	156.7	same as 12	USCG and port authorities
	20	157.0	161.6	same as 12	port operations
	65A	156.275	156.275	same as 12	same as 20
	66A	156.325	156.325	same as 12	same as 20
	73	156.675	156.675	same as 12	same as 20
	74	156.725	156.725	same as 12	same as 20
commercial	7A	156.35	156.35	ship to ship ship to shore	commercial business
	8	156.4		ship to ship only	same as 7A
	9	156.45	156.45	ship to ship ship to shore	same as 7A
	10	156.5	156.5	same as 9	same as 7A
	11	156.55	156.55	same as 9	same as 7A
	18A	156.9	156.9	same as 9	same as 7A
	19A	156.95	156.95	same as 9	same as 7A
	67	156.375		ship to ship only	workboats
	77	156.875		ship to ship only	commercial, business
	79A	156.975	156.975	same as 9	same as 7A
	80A	157.025	157.025	same as 9	same as 7A
	88A	157.425		ship to ship only	fishing vessels
non-commercial	9	156.45	156.45	ship to ship ship to shore	clubs, marinas, yards, etc.
	68	156.425	156.425	same as 9	yachts
	69	156.475	156.475	ship to shore only	clubs, marinas, yards, etc.
	70	156.525		ship to ship only	yachts
	71	156.575	156.575	ship to shore only	same as 69
	72	156.625		ship to ship only	yachts
	78A	156.925	156.925	ship to shore only	same as 69
	83CG	157.175	157.175	ship to ship ship to shore	US Coast Guard's Auxiliary only
public correspondence (telephone calls)	24	157.2	161.8	ship to coast	telephone calls
	25	157.25	161.85	ship to coast	telephone calls
	26	157.3	161.9	ship to coast	telephone calls
	27	157.35	161.95	ship to coast	telephone calls
	28	157.4	162.0	ship to coast	telephone calls
	84	157.225	161.825	ship to coast	telephone calls
	85	157.275	161.875	ship to coast	telephone calls
	86	157.325	161.925	ship to coast	telephone calls
	87	157.375	161.975	ship to coast	telephone calls
NOAA weather service	WX 1		162.55	receive only	weather broadcasts
	WX 2		162.4	receive only	weather broadcasts

Table 1. How VHF FM Marine Radio Channels Are Used in the USA.

tured into shoal waters of about three-foot depth while attempting to get up close to photograph the picturesque old Thomas Point Lighthouse. *Sea Scraper* had plowed so far into soft mud on the bottom of the Bay she was stuck. The captain had tried to power backwards out of the hangup but couldn't budge the craft.

Bay Chaser established direct communications with *Sea Scraper* on channel 22 while the Coast Guard stood by. Coast Guard also kept one ear cocked toward channel 16 in case other emergencies came along.

"*Bay Chaser.* This is *Sea Scraper.* We may have damaged our hull. We're taking on some water in the engine room." The Auxiliary tried to speak soothingly to those listening aboard *Sea Scraper* while maneuvering in close enough to toss over a line.

WN3AIQ went forward, leaning out into the pulpit for a better view. We sailed silently nearer the action scene, without coming close enough to interfere. Mean-

Channel Number	Frequency MHz Ship Transmit	Shore Transmit	Kind of Traffic	Function Ship to Ship	Ship to Shore
1	156.05	160.65	international only		x
2	156.1	160.7	international only		x
3	156.15	160.75	international only		x
4	156.2	160.8	international only		x
5	156.25	160.85	international only		x
6	156.3		safety	x	
7	156.35	160.95	international only		x
7A	156.35	156.35	commercial	x	x
8	156.4		commercial	x	
9	156.45	156.45	commercial	x	x
10	156.5	156.5	commercial	x	x
11	156.55	156.55	commercial	x	x
12	156.6	156.6	port operations and US Coast Guard	x	x
13	156.65	156.65	locks, canals, pilots	x	x
14	156.7	156.7	ports, US Coast Guard	x	x
15	156.75	156.75	environmental	ship receive only	
16	156.8	156.8	distress and calling	x	distress call
17	156.85	156.85	state control		x
18	156.9	161.5	international only	x	x
18A	156.9	156.9	commercial	x	x
19	156.95	161.55	international only	x	x
19A	156.95	156.95	commercial	x	x
20	157.0	161.6	port operations	x	x
21	157.05	161.65	international only		x
21CG	157.05	157.05	US Coast Guard only	x	x
22	157.1	161.7	international only		x
22CG	157.1	157.1	US Coast Guard	x	x
23	157.15	161.75	international only		x
23CG	157.15	157.15	US Coast Guard	x	x
24	157.2	161.8	telephone calls		x
25	157.25	161.85	telephone calls		x
26	157.3	161.9	telephone calls		x
27	157.35	161.95	telephone calls		x
28	157.4	162.0	telephone calls		x
60	156.025	160.625	international only	x	x
61	156.075	160.675	international only	x	x
62	156.125	160.725	international only	x	x
63	156.175	160.775	international only	x	x
64	156.225	160.825	international only	x	x
65	156.275	160.875	international only	x	x
65A	156.275	156.275	port operations	x	x
66	156.325	160.925	international only	x	x
66A	156.325	156.325	port operations	x	x
67	156.375		commercial	x	
68	156.425	156.425	non-commercial	x	x
69	156.475	156.475	non-commercial		x
70	156.525		non-commercial	x	
71	156.575	156.575	non-commercial		x
72	156.625		non-commercial	x	
73	156.675	156.675	port operations	x	x
74	156.725	156.725	port operations	x	x
77	156.875		commercial	x	
78	156.925	161.525	international only	x	x
78A	156.925	156.925	non-commercial		x
79	156.975	161.575	international only	x	x
79A	156.975	156.975	commercial	x	x
80	157.025	161.625	international only	x	x
80A	157.025	157.025	commercial	x	x
81	157.075	161.675	international only		x
82	157.125	161.725	international only		x
83	157.175	161.775	international only		x
83CG	151.175	151.175	USCG Auxiliary only	x	x
84	157.225	161.825	telephone calls		x
85	157.275	161.875	telephone calls		x
86	157.325	161.925	telephone calls		x
87	157.375	161.975	telephone calls		x
88	157.425	162.025	international only	x	x
88A	157.425		commercial	x	
WX 1		162.55	NOAA weather broadcasts	ship receive only	
WX 2		162.4	NOAA weather broadcasts	ship receive only	

Table 2. Channel Numbers and Frequencies in Use in the VHF FM Marine Radio Service.

while, we heard all that was going on via radio.

The Auxiliary, with a shallower draft, motored close enough to *Sea Scraper* to throw a line. We could see a woman and two children on the *Scraper*. The skipper grabbed the three-quarter-inch rope as it slapped his deck. He quickly tied off the line to a stern mooring cleat. The Auxiliary turned stern toward the *Scraper* and very slowly drew the line taut. Forward power in the *Bay Chaser* brought the *Scraper* out of the mud and back into six feet of water where she floated free.

"Stand by. We'll come aboard to check that water in your engine compartment," *Bay Chaser* radioed to *Scraper*. The Auxiliary pulled alongside *Scraper* and they rafted together with lines cleated fore and aft on each boat. One of the men on the Coast Guard Auxiliary went over the lifelines onto *Scraper's* deck, and then below to look at the possible leak. Pretty soon we heard this on channel 22:

"*Bay Chaser*. This is *Sea Scraper*. Joe, this is Fred. There must have been a rock outcropping in that bottom mud. He has a very small dent where the hull seems to have been crunched in by passing over something hard. There's a tiny crack letting water seep in."

The reply was, "OK, Fred. You stay on board. We'll take them in tow to South River Marina. They can get things checked out there."

With that, things got routine even though the channel 22 communications continued for some time. The Auxiliary untied from the *Scraper* and hooked a line from its stern to the bow of *Scraper*. *Bay Chaser* began pulling *Sea Scraper* toward the nearest boatyard where damage could be surveyed and repairs made. Radio contact was maintained with an

occasional transmission from Joe to Fred.

With WN3AIQ at the helm, I reached into the cabin and changed the radio back to WX-2. The special forecast for Chesapeake Bay was on. The day would continue to be pleasant; the evening would be fine. I checked WX-1 and found a different government station transmitting. It also was full quieting in the receiver. When sailing in the Annapolis area, I usually pay attention to WX-2, but WX-1 could be used. Their forecasts overlap. One or the other of the two weather frequencies hold loud and clear signals wherever you are on the Bay.

Back on channel 16, the communications were only those which could be justified as necessary. Occasionally, a skipper would pop up on frequency asking for a "radio check." Somebody would come back, "You're loud and clear." Both boats would identify by boat name and FCC call letters. Radio checks are in the gray area of legality and are not encouraged by the Coast Guard. But, sometimes a skipper gets edgy about who would be able to hear him in an emergency. He asks for a fast radio check and usually gets it.

Communications heard regularly on channel 16 might include pleasure boats hailing each other by boat name and radio call letters; pleasure boats calling the Coast Guard or being called by the Coast Guard; Coast Guard and marine police calling each other and their auxiliaries; freighters, tankers, fishing boats and other commercials hailing other ships, ports, marine police or the Coast Guard; or telephone operators paging both pleasure boats and commercial ships for which telephone calls are waiting.

All of this calling is done with radio operators careful to identify fully by boat name and call. As soon as communications are established, both parties leave channel 16 for a channel specifically authorized for their QSO. For instance, work boats might go off onto channel 67. Fishing vessels might QSY to channel 88A. A pleasure boater might leave channel 16 for channel 9 after getting in contact with his marina or yacht club. The telephone operators ask you to call them back on specific channels between 24-28 and 84-87.

By the way, as with all radio communications except broadcasting and ham transmissions, you can listen all you want but you cannot repeat legally what you heard. And you can not use information heard on the air for your own personal gain. If you hear a boat being paged on channel 16 by your local marine telephone operator and you QSY to a channel to hear the conversation between boat and shore, don't tell anybody what you heard. And don't make any use of the information contained in the telephone call. The *Sea Scraper* emergency reported here is composed of parts of many I have heard on the Bay.

With the excitement over for the moment after the rescue of *Sea Scraper*, we left the marine rig monitoring 16. Unstrapping the Wilson, we keyed up the Jessup MD .16/.76 repeater from atop 100 feet of water in the middle of the Bay. A quick QRZed on .52/.52 raised Charlie WA3RPU, piloting his giant motor-freighter near the Sandy Point Light en route to Norfolk. But using HF and VHF ham gear maritime mobile is a story for another time. Next time you're boating on the Chesapeake, call *Freelance* WYN-2260 on channel 16. We could QSY to .52/.52 for a quick QSO. ■

Maj. Robert M. Harkey (Ret.) W4CUG
1204 Dooley Dr.
Charlotte NC 28212

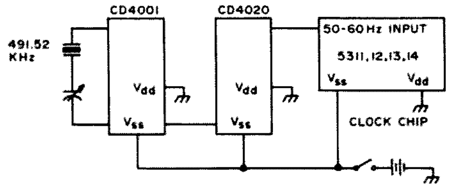

Fig. 1. Crystal oscillator, 13 stage binary divider.

Oops! There Goes the Power

-- keeping digital clocks going anyway

Digital clocks have long held a fascination for me, and judging from the number of articles in electronics publications, they also hold a high attraction for many other people. I've gone through all the stages from a complete discrete (?) integrated circuit clock with minitron readouts to the latest MOS clock chips with LED readouts. As a result, I have learned a few lessons which should be of interest to other "clock fanatics."

One of the most frustrating problems with any ac powered digital clock is its volatile memory – that is, when the power fails for even an instant, the memory of the displayed time is destroyed, and when power is restored, the clock will not display the correct time. With some MOS chips, the clock will reset to 12:00:00 or 00:00:00, while with others any time may be displayed, even impossible times such as 28:42:00. Several methods of preventing this situation are available: (1) Use a crystal oscillator timebase and battery power; (2) Use the ac line for timebase and primary power with battery power to prevent memory dump when the ac power fails; and (3) Use the ac line with capacitor backup as a power source when the ac power fails for momentary retention of clock memory. Obviously, (1) is the most desirable setup since the clock can then be used in a car, boat or any portable requirement. It is the least desirable from the standpoint of cost and complexity. A partial diagram of such an arrangement using the 53XX series of clock chips is shown in Fig. 1. (2) is a relatively uncomplicated arrangement which prevents loss of memory and, depending upon the length of time that the ac power is off, will provide good service. The clock is not triggered during the time the power is off and will show a loss of time when the power returns. Also, during the power off time, the display will not be illuminated. Since the displays draw the majority of power, only the clock chip is battery powered during the ac power failure. Fig. 2 shows a partial diagram of the battery powered arrangement. Either dry batteries or rechargeable batteries can be used and are depicted in Figs. 2(a) and 2(b) respectively. In effect, the battery "floats" across the rectified ac power source and is switched on by diode D1 upon failure of the ac power. Note also the use of diode D2 which isolates the display power from the battery. If this diode is not installed, the battery will be quickly discharged by the display current drain. In Fig. 2(b), a method is shown which will keep the rechargeable nicad battery on trickle-charge from the ac power source. Solution (3) is one of the best solutions to the problem that I've found. Most power failures are of a momentary nature (less than 2 – 3 seconds) in areas where I've lived, and these are the most frustrating for clock owners. In some cases, the failure is not even noticed, yet the clock's memory is destroyed and the clock must be reset. To overcome this problem, I now use the circuit in Fig. 3. Notice that the only addition to the standard clock circuit is one diode. This diode acts as a switch. During normal ac operation, the switch is

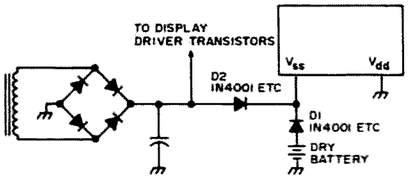

Fig. 2(a). Dry battery memory backup.

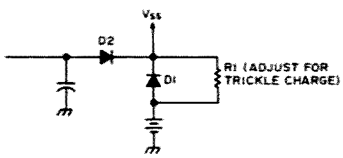

Fig. 2(b). Trickle charger battery backup.

closed and power flows from the bridge rectifier to the display directly, and through the diode to the filter capacitor and the clock chip. Upon power failure, the diode switch is reverse biased by voltage stored in the filter capacitor and the display is not illuminated. However, power from the capacitor flows continuously into the clock chip for several seconds and the memory is retained. Since the MOS chips draw only about 8 mA and will operate down to about 7 to 8 volts, the capacitor can supply power for several seconds. By using a 14 volt supply and a 3,000 uF capacitor, approximately 5 seconds will pass before memory destruction occurs. This is by far the least complex and least expensive method of improving the reliability of digital clocks.

One other tidbit of information concerns the 50252 clock chip sold by Radio Shack and other dealers. This chip requires that you depress both the tens-of-minutes and hours time set switches to advance the minutes display. This is somewhat cumbersome and more times than not I advanced the tens-of-minutes digit or the hours digit because the switches were not depressed simultaneously. The solution involves a third switch and two diodes (1N4148s or similar) and is shown in Fig. 4. The added switch now advances only the minutes display with no worry of accidentally advancing any of the other displays. This particular clock chip has several desirable features such as 24 hour alarm, 10 minute snooze alarm and a built-in tone generator for the alarm. However, it does have one disadvantage which is not immediately obvious — it cannot be operated in the 24 hour mode on 60 Hz power. This feature is a matter of individual preference and was somewhat of a disappointment to me. I'm unable to figure out why the chip functions like this since the alarm feature always operates in the 24 hour mode regardless of the input power line frequency (50 or 60 Hz); however, the display will only operate in the 24 hour mode when the input is 50 Hz.

Since many of the MOS clock chips are now in the $5 range, uses other than just a timekeeper should be explored: frequency division for counters or synthesizers, portable timers for sporting events, etc. It appears there are many possibilities and if you have some ideas, I'd like to hear from you. ■

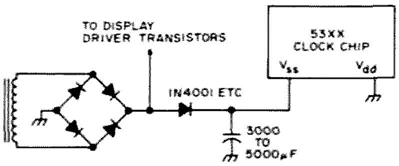

Fig. 3. Capacitor backup for short-term memory protection.

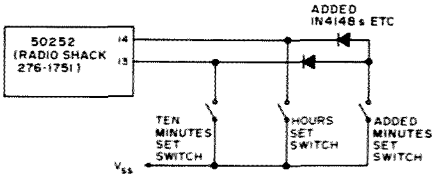

Fig. 4. Setting circuit for 50252 chips.

Stan Horzepa WA1LOU
72 Stiles Street
Waterbury CT 06706

TT Pad for the Wilson HT

-- and a belt clip mod, too

In November, I attended the ARRL New England Division Convention in Hartford and took along my Wilson 1402SM two meter FM hand-held transceiver. I wore it on my belt and with its miniature touchtone pad, it attracted the attention of many hams.

A number of hams even stopped and asked questions about the rig and some wanted to have a closer look. When I gave them a closer look, they were further impressed by the addition of a belt clip on the back of the transceiver.

There was a lot of interest in my modified Wilson; at one point, there were a half dozen hams surrounding me on the convention floor asking questions (I felt I was conducting an unscheduled technical forum!). And, there are a lot of Wilson owners, so I thought I'd write a how-to article for these hams and all hand-held transceiver owners, since the modifications I made on my transceiver are applicable to most of the other hand-held rigs available today.

After I purchased my Wilson, there were two things I wanted to add – a touchtone encoder and some kind of clip that would permit me to attach and detach the Wilson from my belt or pocket quickly. The Wilson does have an accessory leather case with a belt notch permitting it to be attached to your belt; the problem with this is you must unbuckle and remove your belt each time you wish to use the transceiver and this does not promote swift communications. Also, I like to throw my Wilson in its nicad charger whenever I'm not using it . . . but this isn't easy to do because you must remove the leather case before the rig will fit in the charger. For these reasons, I filed my leather case in the bottom of a desk drawer and looked for a better way.

I noticed that many Motorola HTs have just the kind of clip that I was looking for, and after doing a little inquiring, I found that the clips were available separately from Motorola.[1] I purchased one to try out on my Wilson. To attach the clip to the rig, you have to take the transceiver's plastic case apart. First, slide out the battery pack and remove the four screws on the back and bottom of the unit. The front of the case will then snap off, hanging by a couple of wires. Now, remove the five screws holding the PC board to the back of the case; these screws are located at the corners and center of the board and when they are removed, the back of the case snaps off completely from the rest of the unit.

The belt clip has two holes in it for mounting and two 2-56 x ¼" round head machine screws will do the job. Using the clip, you can make a template and be able to mark the spots on the case where you will have to drill. Be sure these spots are centered on the upper quarter of the case.

Use a hand drill and not too much pressure or you might crack the plastic case. After the holes have been

made, take a small screwdriver and jam it into the belt clip's spring in order to keep the spring open. This permits the clip to be mounted parallel to the back of the case. Now, mount the clip with the two screws; nuts and lockwashers are unnecessary as the clip itself will lock the screws in place. If the mounting is done properly, the heads of the screws won't be in contact with the PC board; however, if it makes you feel more secure, cover the screws with a piece of electrical tape.

Now you can reassemble the case and the job is complete. If you wish, you can spray a couple of coats of paint on the clip to match the color of your rig ... "wrought iron black" did the trick with the Wilson.

When I was looking for a touchtone encoder for my Wilson, I heard about the new Motorola MC14410 IC for touchtone application, and at the same time, Data Signal, Inc.[2] began advertising their touchtone encoder kits which implemented the Motorola chip. For only $24.50 you get the chip, PC board, 1 MHz crystal, the keyboard of your choice and all of the other necessary components. I ordered the small 12-digit keyboard because the larger board mounted on the Wilson would not fit in the nicad charger.

After receiving the "kit," a few wires remained to be soldered and the keyboard had to be mounted on the front of the Wilson. I made a template by tracing the keyboard's mounting posts and pins on paper. After removing the battery pack and front of the case, using the template, I marked the spots to be drilled. The template should be positioned as close as possible to the speaker, so that when the keyboard is mounted, it will be clear of the nicad charger.

After drilling and filing the necessary holes – four for the corner mounting posts and two for the two rows of pins – bring the wires from the PC board through the holes making sure that the wires to be soldered to the right row of pins are brought through the right hole and the wires to be soldered to the left row are brought through the left hole. Solder the wires close to the plastic base of the proper pins and clip off the excess pins; this will provide sufficient clearance for the nicad battery pack.

Carefully mount the keyboard onto the front of the case and use a soldering iron to melt the mounting posts to the inside of the case. The keyboard will be stably mounted.

Now solder the ground wire to the negative battery terminal and the plus 12 volt wire to the VR3 volume/on-off control. If you are using a 12-digit keyboard, there will be one wire left that is used for the 16-digit board; this wire can simply be cut off.

After the wiring is completed, wrap the PC board and crystal with electrical tape and fit it snugly between the crystal switch and front of the case. The board will remain in this position; however, you may want to secure it with additional tape.

Any excess wire should be pulled up and taped near the speaker so that the wires running parallel to the battery pack will lie flat on the case. In addition, this parallel-running wire should be taped down onto the case. Now, reassemble the case, slide in the battery pack and you'll be on the air with your belt-clipped TT'd HT. ■

[1] Part Number 42-82839 J01 available from Motorola, 85 Harristown Rd., Glen Rock NJ 07452, (201) 447-4000 ... $4.50 will cover the cost of the clip and shipping.

[2] 2212 Palmyra Rd., Albany GA 31701, (912) 435-1764.

by Wayne Green W2NSD/1

I/O EDITORIAL

COMPUTER CONVENTION

The MITS World Altair Computer Convention in Albuquerque came off very well with some 500 plus computer hobbyists attending. The convention was run in the Airport Marina hotel, just around the corner from the new MITS plant.

Since only Altair computers were being shown, there were not a lot of exhibits ... but those which were there were of interest. Probably the most exciting was a ham station (WA8VNP) set up and operating in the RTTY contest (which was coincidentally on that weekend). The whole works was being displayed on a CRT with one area for the received copy, one for the copy being typed to be sent, another for checking for duplicates, and a fourth for logging. A built-in clock added the time to each exchange.

All the operator had to do was type in the call of the station to be worked and the report ... the computer then checked to see if that station had yet been worked on this band ... if so, it typed out "Dup." If not, it would go ahead with the contact when given the word to start.

Another system was showing a biorhythm display. It would ask your birthday, how many days you would like shown, and starting with what date ... from there on it would plot your emotional, intellectual and physical curves, showing you why things went so wrong or perhaps what you might expect next week.

Cromemco's TV dazzler was one of those gee-I've-gotta-have things. I'm not sure what it can do, but it was impressive in its ability to show colors on a big color TV set. I suspect that someone into art could work up programs which would be real knockouts.

In view of some past hostility to firms making Altair-compatible boards, it was surprising and comforting to see one competitor there with a display of their boards.

The day and a half of the convenion was all too little for all the alking and seeing to be done.

And hams? A substantial number of hose who came had HTs sticking out f a pocket!

I finally found out what MITS stands for ... seems they got started in 1969 making telemetry kits ... it is icro Instrument and Telemetry ystems. In 1970 they got into calcuators and by 1974 had taken a errible beating as calculator prices plummeted. They were just about to give up when they came up with the Altair 8800 computer – and the rest is history.

MY BIG SPEECH

Since the other editors in the field had been asked to give a talk, I came prepared, too ... hoping that perhaps I had just been overlooked. It turned out that I apparently was not in the same league as the others, so I still have my notes.

The basic thrust of my proposed talk had to do with the almost unlimited opportunity that microcomputers afford. I doubt that there has ever been a time in the past when it was possible to see so clearly the opening of a whole new field ... a multi-billion dollar field. Flying pioneers knew they had something, but they had no hint of the magnitude. You have to be fairly old now to remember the almost universal reservations which greeted television in its early years. My folks were really upset when I went out in 1948 and spent $250 for a ten inch black and white set ... a waste of money ... we'll never watch it ... etc. We watched it ... including wrestling, westerns, everything.

The hobby computing field is fantastic. It isn't very big as yet ... in fact, it may never be very large ... but it is going to have a profound effect on the history of the world. The computer hobbyist is going to pay for the technical development needed to build small computer systems which are needed by small businesses, schools and homes.

You can today buy a computer system for about $5000 that would only a couple years ago (or less) cost you around $50,000 ... and this is only the very beginning. Let's look ahead a little ... how long will it be before we have the $299 smart terminal? It will have a black and white TV monitor (they run about $75 new these days) ... a 16K RAM memory for programs and storage ($20?) ... a ROM with text editing and word processing programs ... a printed circuit board keyboard like the ones now used for tone pads on HTs ($5?) ... a video display chip ($5) ... keyboard/ASCII chip ($3) ... etc.

What office desk will be able to be without a desktop terminal? It will be used to type all letters, will work fine for form letters, will act as a file cabinet or card file, calculator, Teletype via phone lines, handle all the bookkeeping and accounting, send invoices, print out labels, inventory, etc. Each office will probably need some hard copy device ... either a line printer or a photo copier to read from the tube. They will need some data bank ... tape, disk ... or something not yet invented ... perhaps like a video disk system.

One of the tech sessions at the MITS computer convention. Over 500 computer hobbvists came to Albuquerque for the do.

Every worker in an office will need a terminal ... every retail store will need one to keep track of sales, inventory, costs, etc. Will the computer terminal be as common on school desks of the future as the inkwell was when I went to school?

And how about the home? The terminal here could be used for an almost infinite number of applications ... security ... heating ... grass watering ... message center ... letters ... banking ... ordering from local super market for delivery by electric cart ... ordering from Sears, etc. ... any school course of instruction ... games ... and etc^n.

I see these markets as inevitable, and I believe that they will evolve from the present computer hobby systems ... with hobbyists both paying the freight for this development and participating in it. I also see this as a very good way for things to go.

Let's suppose that IBM or DEC had the vision to come out with a $299 computer, complete with CRT, keyboard, some ROM programs, RAM memory and the ability to interface with larger memory, other terminals, line printers, etc. It just might happen that their present system of selling would stick ... factory to customer via local factory reps and service centers. That would deal us out of the big ball of wax.

But the present system, which is developing with small manufacturers, local computer stores for sales, programming and service, affords a much more widely based market ... one that can accommodate many manufacturers and still keep prices down. The pricing schedule of the big computer firms is a tough bone, with many items being marked up 100% when sold by other than the manufacturer. A $1500 printer then sells for $3000!

Computer stores will be much like hi-fi stores, carrying equipment of many manufacturers and mating compatible gear. The old OEM price schedule will hold for dealers and the markups will be more like 35% than 100%. Maybe even less.

Continued

Your guess is as good as mine as to how many terminals will be sold to handle some 44 million school children . . . 80 million homes . . . and perhaps 60 million workers who might need one. I'd say that it will be a large market . . . maybe 25 to 50 million terminals per year . . . plus peripherals such as memory, printers, etc. That would certainly come to 10 to 30 billion per year in sales. Not bad for a market that doesn't even exist today!

As long as the big computer firms don't notice this market, it will be wide open to the newcomer . . . and that means the computer hobbyist has a big advantage. Few others have the range of experience needed to get this new industry started . . . the hardware and software background combined. In five years the big manufacturers in the micro field may well be the small firms which are springing up today to provide hobbyists with equipment.

It is possible right now to develop a computer product and get into production with it for very little . . . and do well. Never has there been such an opportunity in the computer field for small businesses to start and grow. An investment of a couple of thousand dollars today could well launch a company worth over a million dollars in just a year or two.

Well, that's the message I thought the computer hobbyists and computer store owners might be interested to hear. Time will prove whether I am overly optimistic or not. My past predictions have come off well, so maybe I'll hit again.

PROGRAMS FOR SALE?

Newcomers to the computer field are sometimes surprised, once they have their system up and running, to find that all they have is machinery and the darned thing just sits there . . . not *doing* anything. Not that everyone hasn't heard of software and programs — it's just that many neophytes don't understand the tremendous importance of such.

Old hands are culpable in this, too, for they are generally familiar with a commercial or school system which came with software and, shucks, you can get all sorts of programs from the users groups . . . from libraries . . . no strain. Oh yeah?

Foreseeing this problem last year, I organized the Kansas City meeting of the microprocessor industry to form a standard cassette medium for program interchange. The meeting was difficult to get going . . . I had to get the site set up for it . . . send out letters to all involved . . . write it up in *Byte* . . . and then make an awful lot of phone calls to follow it up. The meeting, for which *Byte* has been given credit, was my idea and my doing . . . and the people who had taken over *Byte* were furious that I had set up the conference . . . they didn't want to be bothered.

So much for that.

So now we have a medium which can be used for entering programs into small computer systems. One thing which I think will help hobby computers and small business computer systems grow more than anything else will be a low cost plentiful supply of programs. I hope to provide same.

Here is the deal. I will buy programs from programmers and pay a good royalty on them. I will duplicate these and have them on sale in all of the computer stores around the country . . . and possibly in some of the more forward looking electronics distributors. I will have them carefully checked in my own lab to make sure that they work as advertised and that duplicates are perfect. We already have excellent tape duplicating equipment which we use for making the Morse code and radio theory cassettes we are presently selling . . . over 2500 a month.

Don Alexander WA8VNP and his RTTY station — winner of the grand prize in the MITS Altair demonstration contest. The home-built system consisted of an Altair 8800 with 8K of memory, an ASCII keyboard, a video display, Baudot teletype and Heath transmitter and receiver. Don also wrote the assembler and editor for the system, as well as the software to run the amateur station. The Altair did the Baudot/ASCII translation, cross-checked calls for duplication, and automatically sent the time and message number along with any text generated by the keyboard. After each contact, a logging entry was made on a model 26 teletypewriter. Don won a complete floppy disk system as the prize.

If you are a programmer and have a good program available, please let me know. I need to know what it can do, what system it is for, and how much memory it takes. We will be able to check out programs on the Altair 8800 . . . have been promised a Sphere system . . . and hope to eventually have all other popular systems set up and running so we can check the programs.

What kind of programs can sell? Just about anything. I would expect we might have a cassette with five games on it which would go for $2.95. A real fine Star Trek program might go for $4.95. A payroll program for small businesses could go for perhaps $19.95. We would want to keep the prices down to where it would not be worthwhile to bootleg them or even make copies for friends . . . thus getting out from under the problem MITS has had with their BASIC, which apparently has been copied quite a bit.

Programmers would benefit substantially under this plan, since they would make 10% of the gross sales. Thus a $12 program would wholesale to computer stores for about $8 and the programmer would make an 80¢ royalty. This would mean $8,000 royalty for every 10,000 of the programs sold . . . and with several hundred thousand customers out there, if only 10% of them bought a given program this would mean a very nice return for the effort of writing and documenting the program.

These programs would be a bonanza for the stores . . . it would give them the ammunition they need to sell systems . . . not to mention that they might eventually be a good profit item in themselves as businesses and hobbyists come into the store to find out what new programs are available every week or so.

It is going to take this idea a while to get into motion. First we will have to get our own computer systems up and working . . . our experience has shown this not to be a minor undertaking. We have two computer techs and programmers on our staff right now and are looking for more. Then we will have to run thorough tests on cassettes to see which work best . . . using a computer to check each tape as it is made, comparing it, bit for bit, against the original.

Programmers . . . it's time to get working on your programs. Be sure to document them well . . . be sure you are not drawing on others' work . . . all our programs will be copyright . . . please put in some extra steps which are not needed, as a key to copyright infringement prosecution. We will need games . . . chess, backgammon, Star Trek, and so forth . . . business programs such as inventory, general ledger, accounts payable, accounts receivable, mailing list, and so forth. We will have to have a statement from you that your work is original.

Hopefully this system will provide the money to encourage programmers to work overtime to provide the software we need to sell small computer systems. By bringing a system to this presently chaotic aspect of computers, perhaps we can help the field to grow more rapidly.

Here is John Craig, the editor of the I/O section of 73. *John lives in Lompoc, California, where he is busy setting up some of the more popular microprocessor systems for evaluation.*

ATTENTION, CLUBS!

One of the big problems for many club meetings is getting interesting material . . . so I've been watching out for interviews which I might get on tape which could be of interest to clubs.

The first tape I have available is an interview with Ed Roberts, the president of MITS . . . the first manufacturer of microprocessor kits to hit the jackpot. His Altair 8800 computer kit came out about a year and a half ago, just as MITS was in serious shape as a result of the plummeting prices in the calculator market. Their first year's sales of computers was about ten times what they estimated, and they are just now beginning to get caught up with events.

Ed's story is an interesting one, and it will give you a lot of insight into the manufacturer's side of things . . . it will also familiarize you a lot with the computer scene . . . what microcomputers are being used for and where the market seems to be going. Hear about some exciting technical developments which are coming.

The tape is on cassette only and is one hour long. It was made with top notch professional equipment, so the sound will be as good as your cassette player. Order Cassette Interview I . . . and never mind the usual prices for such tapes, normally around $12.95 . . . *73* is in the magazine business, not in the tape business, so your cost is only $3.95 postpaid.

This tape may also be of interest to repeater groups which run club bulletins and news of interest to members over the repeater.

Power Supply Testing

-- to save your digital circuits

Ralph Tenny
PO Box 545
Richardson TX 75080

The home computer hobbyist is frequently lured by advertisements for surplus power supplies and power supply kits of all kinds. These offerings range from excellent buys of surplus name-brand units, to units, both kit and assembled, of unknown pedigree.

Performance specifications of these units sometimes are not fully stated in the advertising, but name-brand units can sometimes be researched in the manufacturer's literature. The "orphans" can literally be almost anything, and some surplus dealers are, at best, only brokers. These dealers may not have the necessary equipment, time or interest to characterize surplus units they buy. Power supply kits may or may not have been carefully designed.

Where does this leave the computer hobbyist? Except for his purchase of name-brand units, he can be on a very shaky limb. Problems which might hit him can be one of three: complete failure, regulation failure, or the units may generate random and potentially harmful transients.

A complete failure is a nuisance at best and could be a costly disaster. The CPU can simply be shut down when the power supply quits, and few uP systems have power-fail programming to save the run. Here are two possible disaster scenarios: A series pass transistor shorts and dumps raw dc into the uP systems, destroying all or most of the parts. Or, some critical power supply part fails, starts a fire, and destroys the house. Although the latter is unlikely, even commercial computers have been known to catch fire.

Regulation failures can be explained as a condition where the regulator circuitry ceases to operate in its linear region, usually because the input voltage to the series pass element gets too low. Another problem can be thermal runaway if the unit has not been properly designed for continuous operation. A properly designed supply will protect itself and the load in case of shorts on the output.

The symptoms of regulator failure are low and unsteady output voltage, usually with high ripple feedthrough. The effect on the CPU depends upon which logic family is used in the system. CMOS will be least affected, followed by MOS uP and support chips, and then TTL will be most affected. This non-linear regulator will also have higher than normal output impedance, which leads to coupling between fast logic elements. The uP system may drop an occasional bit, or become completely confused and lock up. Either way, the CPU is out of business.

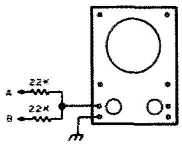

Fig. 1.

Transients on the output come from the power line or are generated by an improperly designed power supply. Power line transients can usually be stopped by transient limiters on the power supply input, and

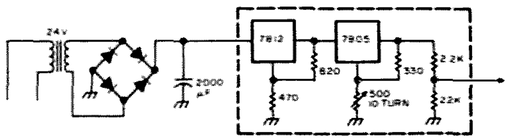

Fig. 2.

output spikes generated by the power supply can be caught by crowbar circuitry. But, if the crowbar has to fire, the CPU will still be shut down in mid-stride. Properly designed power supplies will not generate spikes under any condition of turn-on or turn-off. Of course, we all know that big spikes will kill any IC; we need to remember that small ones may cause improper system startup. Few home brew systems are designed and programmed for standby operation, but main supply shut-down spikes could also bollix the remaining active circuits.

Fortunately, power supplies can be screened for most of these possible defects, using relatively simple equipment. When investments of the magnitude required to own a home processor are concerned, it pays to screen all power supplies not furnished by the system manufacturer. If any home system manufacturer should be guilty of supplying inadequate power supplies, it is likely that the "computer grapevine" will get the word out promptly unless he corrects the problem. For those hobbyists who design their own units, remember that solid state power design is tricky, and even experienced designers test their prototypes thoroughly.

A modest amount of test equipment and two easily built gizmos will enable very extensive qualitative power supply testing accurate enough to assure the hobbyist of adequate and reliable performance from power supplies he uses. *Quantitative* testing, required mostly to prove one's prowess at power supply design, will require more and higher quality equipment. The test equipment needed is the following: a 20k Ohms/volt VOM, a variable autotransformer, a pulse generator, a very stable power supply, and an oscilloscope. The scope should be dual-trace with triggered, calibrated sweep, 5 MHz bandwidth and 10 millivolts sensitivity. The sensitivity and bandwidth are essential, and the triggered sweep will reduce frustrations during much of the testing. However, if a single-trace scope with the other qualifications is available, it is possible to get by with a couple of smart-aleck tricks. Fig. 1 shows how two signals can be mixed on one trace. This trick is good only on two low impedance sources, and it reduces the effective voltage of each signal to half its real value. In place of the calibrated sweep, let signal "A" be the signal to be timed, and signal "B" can be narrow pulses from a pulse generator with 1 kHz output. The resulting display will show 1 millisecond "tick" marks superimposed on signal "A." If the scope has a Z axis modulation input, the pulses can be used to intensify the trace as a time marker.

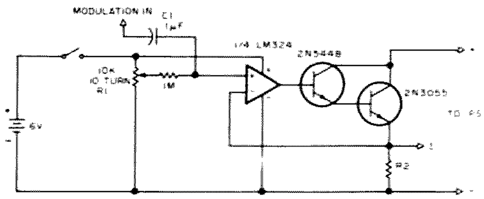

Fig. 3.

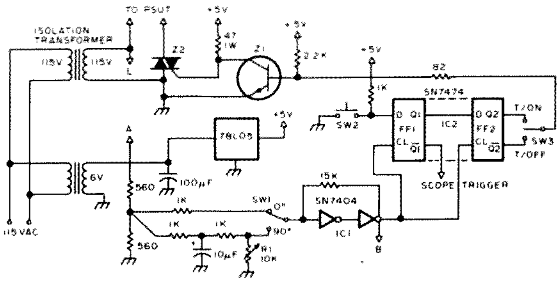

Fig. 4.

The power supply will be used as a comparison standard to check regulation and stability of the power supply under test (PSUT), so it must be much more stable than the PSUT. If there is the slightest doubt, Fig. 2 shows a circuit suitable for a reference supply. All parts inside the dashed line should be built inside a thermally insulated box and the supply should be allowed to run continuously for best stability. The output will vary from below 5 volts to around 18 volts, which should cover all supplies of interest to the computer hobbyist. The other equipment is very common, and the applications discussed below will explain their use.

The first special gizmo is a dynamic load — a circuit which simulates the type of load fast logic places on a

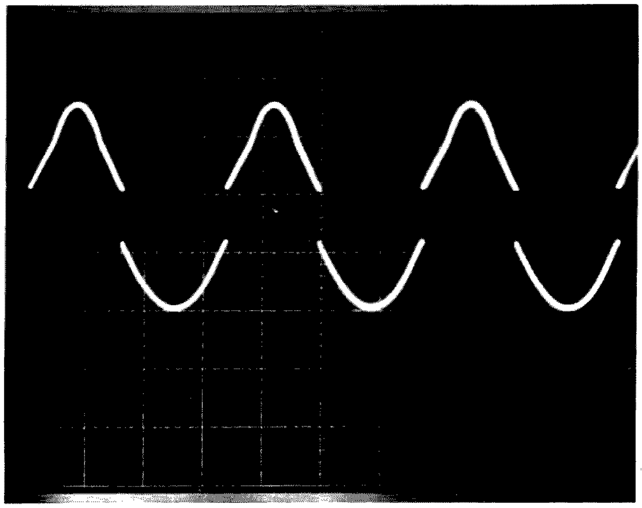

Fig. 5a. Mixed waveforms from circuit of Fig. 4 showing trigger at zero crossing of line voltage.

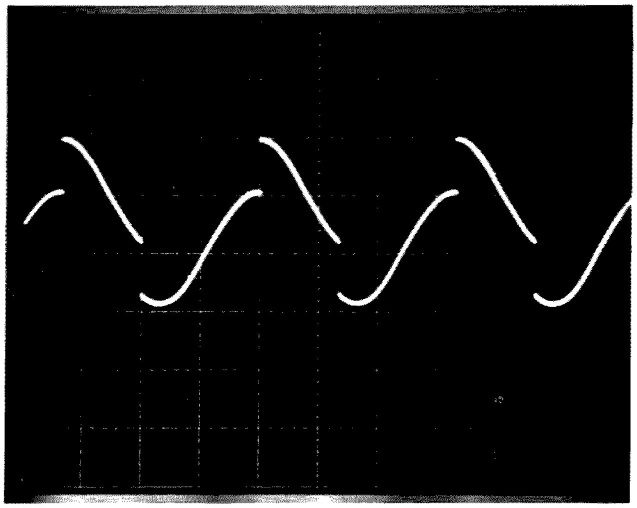

Fig. 5b. Mixed waveforms showing proper adjustment of R1 so IC1 triggers at line voltage peak.

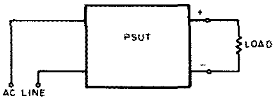

Fig. 6.

power supply. Fig. 3 shows the circuit; R1 sets the load current drawn from the power supply for any given value of R2. R2 is chosen to give about one volt output at the maximum load current to be drawn from the PSUT. C1 is an input from a pulse generator which causes the load current to increase sharply then decrease, varying over a small range. Because Q2 and R2 dissipate the entire power output of the PSUT, both should be mounted on a large heat sink.

The second gizmo allows a power supply to be switched on or off at a special time – either at line voltage zero crossing or at line voltage peak. If the PSUT will develop spikes at turn-on or turn-off, close examination of the PSUT output using an oscilloscope will reveal the problem. Fig. 4 shows the circuit; it is safer to observe the special precaution of using an isolation transformer. If such a transformer is not available, take strict precautions to insure, by measuring both circuit common and point "L" to a good earth ground, that circuit common is really the low side of the line. Circuit operation is simple; IC1 samples the transformer output and produces approximately a square wave. With SW1 in the 0° position, the rising edge of the waveform at "B" will occur at zero crossing. With SW1 in the 90° position, R1 can be adjusted so the trigger occurs at line voltage peak. The photos in Fig. 5 show the mixed waveforms (see Fig. 1) for zero crossing (Fig. 5a) and for switching at line peak (Fig. 5b). IC2 consists of two flip flops which are clocked by the output from IC1. If SW2 is open, Q1 and Q2 are both high; with SW3 in the T/ON position, Z1 is turned on and triac Z2 is turned off. When SW2 is closed, Q1 goes low on the next positive edge from IC1, and Q1 triggers the scope. On the second positive edge from IC1, Q2 goes low and Z1 turns off. Z2 is then turned on by current through the 47 Ohm resistor and any load connected to Z2 is activated. After R1 has been adjusted properly, the load can be switched at zero crossing or line peak by setting SW1 and closing SW2. With SW3 in the T/OFF position, Z2's load is activated until SW2 is closed, then Z2 turns off at the next zero crossing after FF2 switches.

Three types of tests should be performed on all unknown power supplies to give reasonable assurance of safe, reliable operation in a home computer system. These are: (1) transient detection and rate of rise; (2) dc regulation and heat rise; and (3) output impedance.

As mentioned above, power supply transients can disrupt or damage the CPU. In a computer system which uses several different voltages,

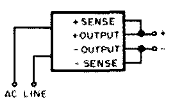

Fig. 7a.

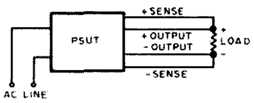

Fig. 7b

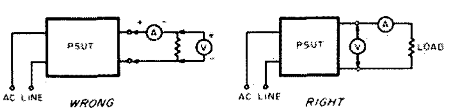

Fig. 8.

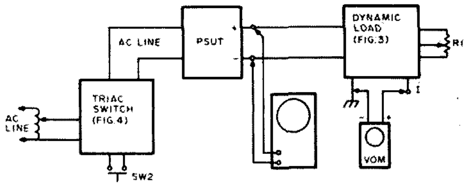

Fig. 9.

sections of the system may lock up or be damaged if (for example) the +15 volt bus comes up before the –5 volt bus. The rate of rise measurement allows the system designer to know if all supplies will come up together when switched by the same power switch.

The dc regulation test tells how well the regulator circuitry performs, and the heat rise test forewarns of possible fire or overheat conditions if the supply is used for continuous operation.

A test of power supply impedance tells how well the supply will decouple possible circuit interactions. A noisy Vcc line can be very bad for TTL logic and may cause subtle problems almost impossible to locate without a very good oscilloscope. Although decoupling on the board is helpful, it will not entirely overcome the effect of a high impedance power supply. Probably 90% of all decoupling would not be needed if a "perfect" (zero output impedance) supply were available. *However:* A "perfect" power supply feeding a load with 2' of #24 wire clip leads might have over an Ohm of impedance for fast logic signals.

Fig. 6 shows typical output connections for a modular, fixed voltage supply which does not have sense lines. Any stated performance specifications (% regulation, noise, ripple, etc.) apply *only* at those terminals. They will still be very close if the supply feeds a load via #8 wire leads. If the supply is feeding a home brew backplane wire wrapped with #30 wire, the top of the card 12 slots away may be in trouble!

Some of the connecting lead problems go away if the supply has sense leads as shown in Fig. 7. Sense leads must connect electrically as shown in Fig. 7a. If this connection is made physically at the supply, the equivalent circuit is the same as Fig. 6. If both the sense leads and load leads attach at the load as shown in Fig. 7b, the published specs now apply at the load.

Power supply test hookups must be carefully and properly made! Fig. 8 shows right and wrong connections – note that the "wrong" connection includes the effect of the load leads and the drop across the ammeter in the measurement. If you want to prove the importance of heavy power supply leads, repeat some of the tests outlined below using the "wrong" connection and #30 wire and check the difference.

Do the transient test first and discard or redesign any unit which fails. Use the triac switch of Fig. 4 with the connections shown in Fig. 9. *Remember the grounding precautions if an isolation transformer is not used.* With SW3 set to T/ON and SW1 set to 0°, sync the scope so the rising output of the PSUT is displayed on the scope as in Figs. 10a and 10b. Repeat the test for T/OFF (Fig. 10d) and repeat the T/ON test with SW1 set to 90° (Fig. 10c). OK the PSUT only if no spiking occurs under low, medium and full load conditions. If rate of rise is important to your system, measure it before dismantling the test setup. The PSUT shown in Fig. 10 was a surplus supply with a good pedigree; it is

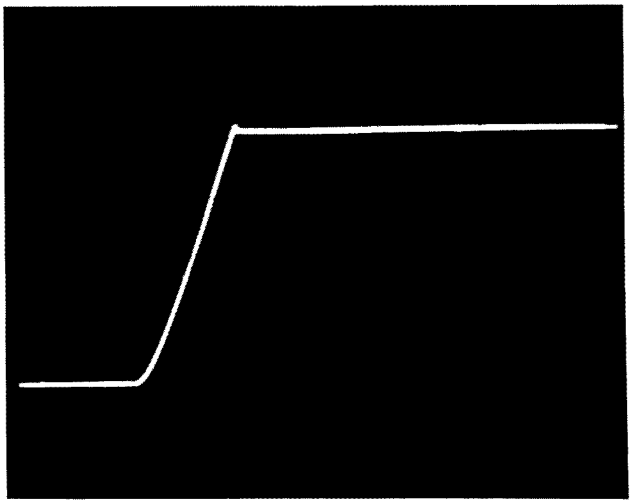

Fig. 10a. Turn-on of 5 V, 3 A power supply; 1.8 A load, switched at line voltage zero crossing. Time of rise – 3 milliseconds. Note rapid response to very minor overshoot.

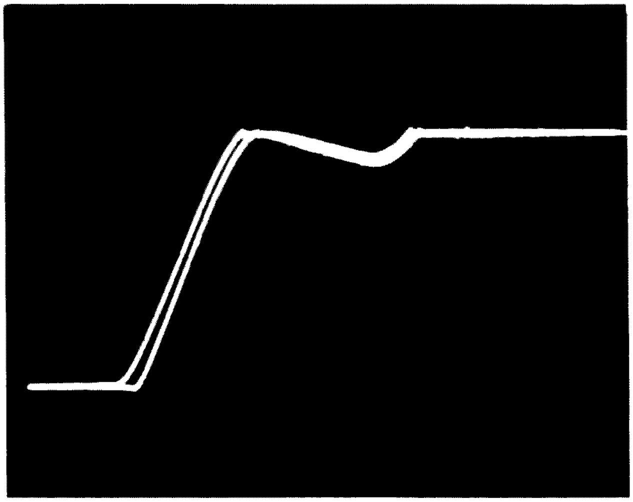

Fig. 10b. Double exposure of 5 V, 3 A power supply; 1.8 A load, zero crossing turn-on. Voltage irregularity caused by incomplete charging of filter cap on first cycle of line voltage. Note that voltage does not exceed set value more than 1%. Excellent regulator!

very gratifying to have such excellent test results from a supply which cost about half the going rate!

Set up the regulation test as shown in Fig. 11. Select R2 of the dynamic load (Fig. 3) for one volt drop at full rated load current of the PSUT, then read current with the VOM at output I. For example, if R2 is 1 Ohm, one Amp will give one volt across R2. Set the line voltage to 115 volts and set the reference supply to the same output voltage as the PSUT. Let the whole system warm up at 50% load (PSUT rating), then connect the VOM with the resistive network shown in Fig. 11. Set the VOM to the 50 microamp scale and adjust the reference supply so the meter reads zero. Close SW4 and readjust the reference supply for mid-scale on the meter. Now, 50 millivolts change in PSUT output will swing the meter to end scale. Lower the line voltage to 105 volts, note the VOM reading after one minute, then raise the line to 125 volts and note the change after one minute.

Percentage regulation is defined as

$$\frac{VH - VL}{VH} \times 100\%,$$

where VH is PSUT output at high line and VL is PSUT output at low line. Since this connection will measure the change in output, this reduces to the VOM reading in millivolts divided by the output voltage set on PSUT (an approximation, unless a digital voltmeter is available to measure VH). For 100 millivolts change (full scale swing on the VOM with SW4 closed) on a 5 volt supply, the % regulation is .1/5 or 2%. This is a "not good" unless the impedance test gives exceptionally good results. Even so, such poor regulation on a supply sold as a "regulated" supply may mean the regulator circuit has problems.

Repeat the test with line voltage fixed at 115 volts and change the load from no load to full load. Compute the regulation as before, using the change in output voltage as measured by the VOM and the nominal output voltage of the PSUT. Acceptable regula-

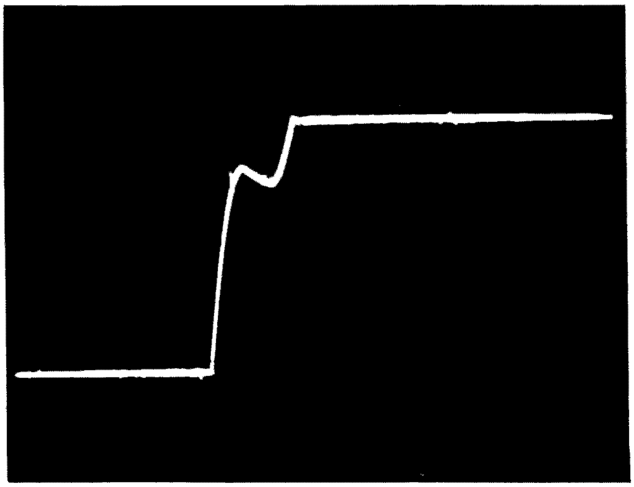

Fig. 10c. Turn-on of 5 V, 3 A power supply; 1.8 A load, turn-on at line peak.

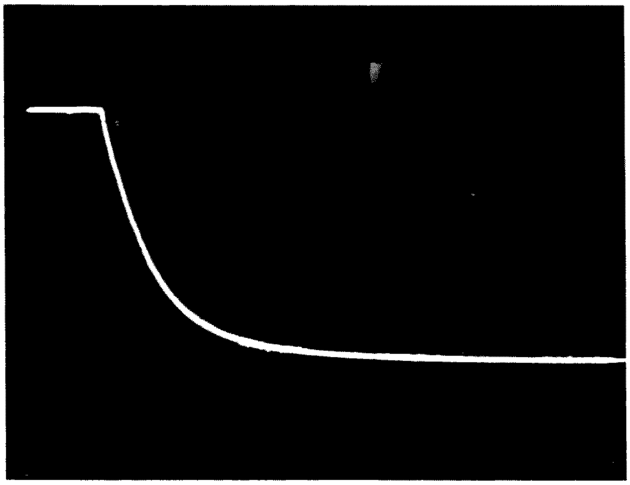

Fig. 10d. Turn-off of 5 V, 3 A power supply with 1.8 A load; total decay time – 150 milliseconds. Note complete absence of transients.

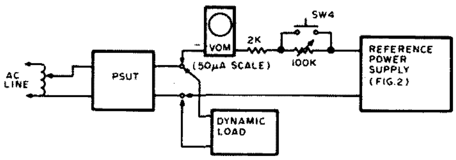

Fig. 11.

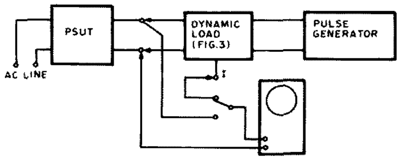

Fig. 12.

tion is .2% (10 millivolts change on a 5 volt supply), but .1% is better for most applications. For that supply with poor line regulation, repeat the no load/full load test at low line voltage and reject it for long-term use if the regulation changes substantially at low line voltage.

Run the heat test by pulling full load for several hours. The PSUT output should change very little, and no part of the supply should become too hot to touch. If the heat rise is too much or the regulation changes drastically, reserve the unit for smaller loads or intermittent duty. Sometimes it is possible to add heat sinks to overheating supplies, but heat-flow design is beyond the scope of this article.

The output impedance test also uses the variable load. In this case, set some mid-range load on PSUT, then feed a small amplitude square wave or pulse to the modulation input. Use the scope to monitor the I terminal on the variable load, and set the modulation drive so the current is changed by 10% of the fixed load current. Then move the scope to the PSUT output and look for output voltage changes at the modulation frequency. Measure both the current change and output change in voltage peak-to-peak and divide the voltage change by the current change. Output impedance is simply this voltage divided by the current. For example, assume the load current is 1 Amp, with a current change of .1 volt peak-to-peak. If the PSUT output changes by .01 volt peak-to-peak, the impedance is .01/.1 or .1 Ohm, a good value. Vary the pulse frequency over a fairly wide range to check for any major change in impedance. Most solid state supplies of good design will hold output impedance essentially constant over a wide frequency range.

Now that you have located a good supply with low impedance, don't handicap it! Run bus *bars* for power lines instead of wires, solder power connections everywhere except where they pass through connectors, use high quality connectors and choose or lay out PC boards with wide, multiple power runs. Even if the logic card draws fairly low power, fast logic generates fast transients. Small power conductors are inductive at much lower frequencies than large, flat conductors. Inductance in a power bus encourages interstage coupling, which spells *trouble* in any computer.

Power supply testing is so important that all computer hobby club members who home brew equipment should pool their resources to assemble a good test facility, then help each other check out all their power supplies. ■

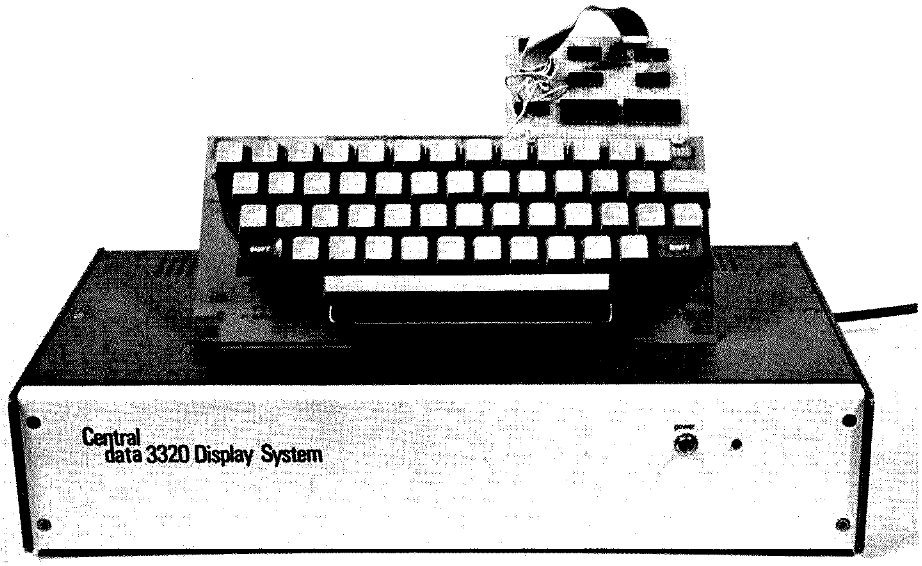

Jeff Roloff
Central Data Company
PO Box 2484, Station A
Champaign IL 61820

Photos by Ed Crabtree

A RTTY/Computer Display Unit

--Baudot, ASCII, TTL, RS232, etc., etc.

In order to interface man with computer, some sort of input/output device is needed. An extremely versatile output device is a visual display unit, which displays data on any modified television screen.

The display unit described in this article is very efficient, both in price and in the density of the data on the screen. It displays 25 lines of 40 characters each on the screen – almost double the density of most other display units now on the market. And the parts cost is less than \$100.00, buying from companies advertising in the back of this and other electronics magazines, including the price of the double-sided, plated-through board. All display unit parts, including the \$20 power supply, are contained on one 7.2" x 11.4" board. The option boards are both about 4" x 4".

The two option boards that are available are used to input serial ASCII and serial Baudot. The first accepts the serial ASCII, converts it to parallel, and enters it into the display unit's memory. It also accepts parallel data from a keyboard, etc., and serializes it. The serial interfaces can be either TTL, EIA RS-232C, or 20 mil loop compatible, all selected by two jumpers. The other option accepts serial Baudot code, converts it to parallel, and changes the code to ASCII. This ASCII data is then sent to the display unit. The inputs to the Baudot board can be either TTL, EIA RS232C, or 60 mil loop.

A useful feature of the display unit is called next line blanking. This causes the screen to be erased, line by line, as the cursor moves down a page full of data. If this feature was not in the display unit, after the screen had been filled with data once, you would simply be writing over old data, character by character. To say the least, this can be very confusing! Full cursor control is available using the "forward/backward" input. The cursor can be moved straight up or down, left or right, or to the left of the screen, and then up or down one line. A self-test line is available so that signals can be displayed on the screen; therefore, in most cases, an oscilloscope is not needed. All logic is done with standard TTL gates and dividers. There are no capacitively coupled lines or other bears to troubleshoot, so a person with a modest experience with logic will probably be able to easily fix his board, should it not work.

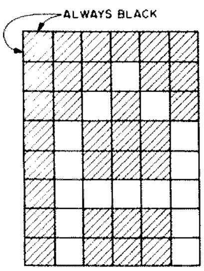

Fig. 1.

Basic Information

The 3320 display unit has a format of 25 lines consisting of 40 characters each. The characters are arranged in a standard 5 x 7 matrix, each space in the matrix being either a white or a black dot on the screen of the television. There is a one dot space both horizontally and vertically which is always

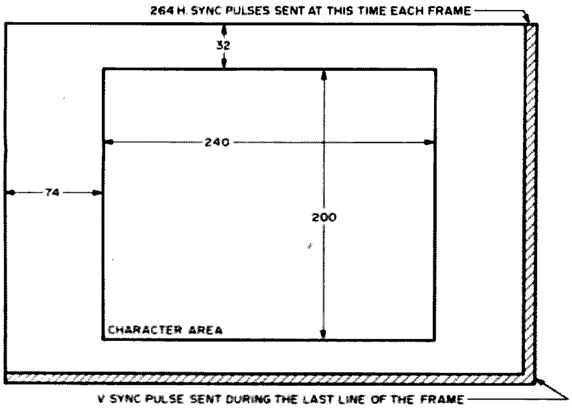

Fig. 2.

black to make sure that there is space between characters. Therefore, each character takes up a space of 6 x 8 dots on the screen, as shown in Fig. 1 for the letter "A". Each dot represents one cycle of the master clock.

The cursor, or the marker showing the next character position, is a white line five dots wide on the top scan line of that character, which is otherwise always black. The cursor flashes at a rate of two times per second to aid in finding it in a crowded screen.

Since characters take up 6 x 8 dots, and there are 40 characters on each of the 25 lines, there is a display area of 240 x 200 dots. There are provisions in the timing chain, however, for 384 x 264 dots. The reason for this is that the television's beam scans past the edge of the screen, where you can't see it. When it is well past the visible area on the screen, a horizontal or vertical sync pulse is sent which causes the beam to go back to the left edge or to the top of the screen, respectively. The display is centered within the 384 x 264 dot matrix, and fills up the visible screen of most television sets. This arrangement is shown in Fig. 2.

To interface the unit with the outside world, a parallel input and video output are provided. The input consists of seven data lines coded in ASCII, along with a strobe line. The strobe line is used to tell the display unit when to enter the data. When the strobe line makes its transition (either positive or negative, jumper selectable), the data is entered into memory. This strobe line is de-bounced on the board, and a strobe received pulse is available at the output connector. This is used by the input options and is required by some types of keyboards. The video output is a 2.25 V P-P signal with the specifications shown in Fig. 3.

Timing

The schematic diagram for the timing chain is shown in Fig. 16, while the timing chain is shown in Fig. 15.

All timing is derived from a crystal-controlled oscillator whose frequency is 6.082560 MHz. The output of this oscillator is called the A clock, and is fed into various dividers until it finally reaches the T clock, being 60 Hz.

The B clock is exactly half of the master clock, since it goes through the first flip flop in the divider chain. The C, D, and E clocks are all of the same frequency, but are different in phase. Since characters are six dots wide, there are six A clock pulses, three B clock pulses, and one each C, D, and E clock pulses. This is shown in Fig. 4 for the top of the letter "A".

The F clock is half of the D clock, and from the G to the J clocks, the previous clock is divided by two to get the present one.

The K clock is special, however. It is low when characters can be printed across the line and goes high when they can't (during horizontal retrace). There are enough clock pulses for 64 characters on a line, but only 40 of these are used. The extra 24 character positions cannot be displayed on most television sets, anyway, and are used for horizontal retrace. The K clock is not the output of a flip flop, but rather a latch that gets set on the 41st character and reset on the first character. In the middle of retrace (when the I clock is low), a horizontal sync pulse is created. This tells the television to send the electron beam back to the left side of the screen so that a new scan line can begin.

The K clock is divided by two, four and eight to get the L, M, and N clocks, respectively. These three clocks are fed to the character generator to tell it which scan line of the character the television is displaying. This is shown in Fig. 5 for the left side of the letter "A".

Note that the top scan line is always blank. This is to provide vertical spacing between characters, and to allow time for 40 characters of the page memory to be moved into the line memory.

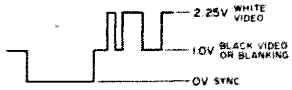

Fig. 3.

This is explained in detail in the memory section.

The last six clocks are different because they are reset at the end of the frame. There are provisions for 264 scan lines per frame (33 character lines of eight scan lines each). Since all dividers must be synchronized with each other, all affected counters are reset at the end of the frame, and the whole timing chain starts over.

As was mentioned earlier, there are provisions for 33 character lines, but only 25 of them are used. The T clock is low when characters can be vertically printed on the screen, and high when they can't (during vertical retrace). The T clock is like the K clock, in that it is a set/reset flip flop arranged as two cross-coupled NOR gates. The flip flop is set on the 26th line and reset on the first. In the middle of vertical retrace, the vertical sync pulse is created, telling the television's electron beam to go to the upper left hand corner of the screen and start a new frame. Several other timing pulses are derived from the lettered clock pulses, and they are explained in the cursor control and memory sections.

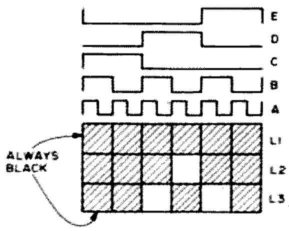

Fig. 4.

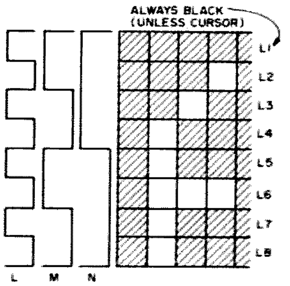

Fig. 5.

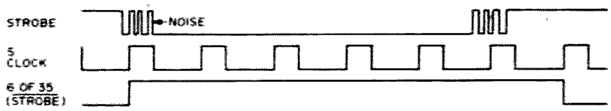

Fig. 6.

b_7					0	0	0	0	1	1	1	1
b_6					0	0	1	1	0	0	1	1
b_5					0	1	0	1	0	1	0	1
Bits b_4 ↓	b_3 ↓	b_2 ↓	b_1 ↓	Column → / Row ↓	0	1	2	3	4	5	6	7
0	0	0	0	0	NUL	DLE	SP	0	@	P	\	p
0	0	0	1	1	SOH	DC1	!	1	A	Q	a	q
0	0	1	0	2	STX	DC2	"	2	B	R	b	r
0	0	1	1	3	ETX	DC3	#	3	C	S	c	s
0	1	0	0	4	EOT	DC4	$	4	D	T	d	t
0	1	0	1	5	ENQ	NAK	%	5	E	U	e	u
0	1	1	0	6	ACK	SYN	8	6	F	V	f	v
0	1	1	1	7	BEL	ETB	'	7	G	W	g	w
1	0	0	0	8	BS	CAN	(	8	H	X	h	x
1	0	0	1	9	HT	EM	)	9	I	Y	i	y
1	0	1	0	10	LF	SUB	•	:	J	Z	j	z
1	0	1	1	11	VT	ESC	+	;	K	[	k	
1	1	0	0	12	FF	FS	,	<	L	\	l	|
1	1	0	1	13	CR	GS	–	=	M	]	m	}
1	1	1	0	14	SO	RS	.	>	N	∧	n	~
1	1	1	1	15	SI	US	/	?	O	—	o	DEL

ENQ – Enquiry
ACK – Acknowledge
BEL – Bell
BS – Back space
HT – Horizontal tab
NUL – Null
SOH – Start of heading
STX – Start of text
ETX – End of text
EOT – End of transmission
ETB – End of transmission block
CAN – Cancel
EM – End of media
SUB – Substitute
ESC – Escape
SI – Shift in
DLE – Data link escape
DC1-DC4 – Device controls
NAK – Negative acknowledge
SYN – Synchronize
FS – File separator
GS – Group separator
RS – Record separator
US – Unit separator
LF – Line feed
VT – Vertical tab
FF – Form feed
CR – Carriage return
SO – Shift out

Fig. 7.

Memory

The memory schematics are shown in Fig. 19.

There are two clocks associated with the page (hex-1024 bit) memory, and one more is created for the line (hex-40 bit) memory. The main memory clocks are labeled Ø1 and Ø2, Ø1 being the output clock and Ø2 being the input clock. For every character that is shifted, both clocks have to be sent to the shift registers. These two clocks have to swing from +5 to -12, which are not standard TTL levels, and must not overlap. There is a clock driver between the timing chain and the memory to buffer these clocks. Since there are 1024 positions in the shift register, but only 1000 are used to display data, 24 extra clocks must be added somewhere in the frame.

These extra 24 pulses begin at the rise of the T clock, and end after 24 pulses have been counted by circuits 21, 13, and 22. These 24 pulses are logically ORed with the 1000 pulses that occur normally. The 1000 pulses occur during the scan line that is always black on the screen (L1), and only in the character area (the 240x200 dot area where characters are displayed). There are 40 of each clock per character line, where a character line consists of eight scan lines.

The line memory is clocked by the line clock which comes 40 times per scan line. During the top scan line of a character line (L1), the page memories are being clocked out, and that data is being clocked into the line memory. The data that was in the line memory is sent to the character generator, but since it is scan line number one, the output of the character generator is all zeros. On the next seven scan lines the data just fed into the line memory is clocked into the character generator over and over again.

The character generator is actually a read only memory that is addressed by the output of the line memory and the L, M, and N clocks which tell it which scan line the unit is now displaying. The output for the first scan line (L, M, N = 0) is always zeros, so the top scan line always is black. The output for the second scan line of the letter "A" would be 00100, the one being the point on the top of the letter.

The output of the character generator is sent to a shift register, which shifts the data out at the frequency of the A clock. The serial input of this output register is grounded so that during retrace its output is low, making black dots on the screen. The character generator's output is loaded into the output register when $\overline{\text{load}}$ is low and the A clock rises. Note that the first load pulse is created one character position after the other memory clocks start. This is because there is a long propagation delay between the page memory's and the character generator's outputs. The output of the shift register is sent to a buffer transistor where it is mixed with the sync pulses and is sent to the television.

Input Conditioning

The input conditioning and cursor control schematics can be found in Fig. 17.

In order to enter the input data into the memory, it is required that a strobe pulse accompany the data. This pulse can be either negative or positive going, depending on the wiring of the strobe jumper. If it is a negative strobe, points A and C are jumpered as explained on the cursor control drawing.

The de-bouncer is the first type D flip flop in the chain. After strobe is received (pin 2 of 35 goes low), the device waits for the next rise of the S clock. When this happens, the output (pin 6) goes high. The reason that this circuit de-bounces is that the S clock has a period longer than any noise on the strobe pulse could last.

The sequence of events is shown in Fig. 6. Pin 6 of 35 is sent to the clock of the next flip flop. When it goes high, the grounded input is transferred to the output (pin 9), and that sets the NAND gate set/reset flip flop. When this flip flop's Q output (pin 8) goes high, its $\overline{Q}$ output goes low, running back through an AND gate and setting the second type D flip flop. Even though pin 9 of 35 now goes high, the set/reset flip flop stays set (pin 8 stays high). That output is sent to the input of another type D flip flop whose clock is the $\overline{T}$ clock. Therefore, when $\overline{T}$ goes high, pin 5 of 36 goes high and 6 of 36 goes low. Pin 6 of 36 is fed back to reset the set/reset flip flop, bringing pin 8 of 17 low. The next time the $\overline{T}$ clock rises, pins 5 and 6 will go back to

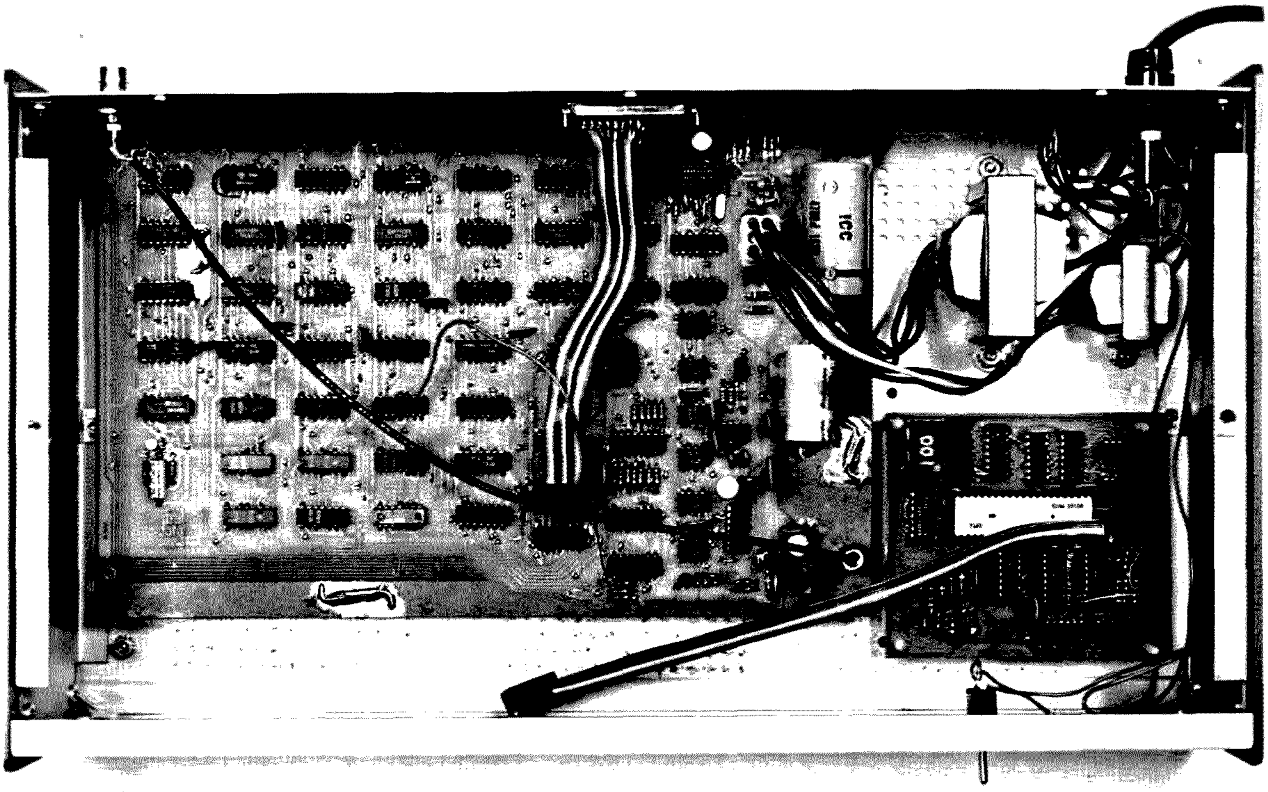

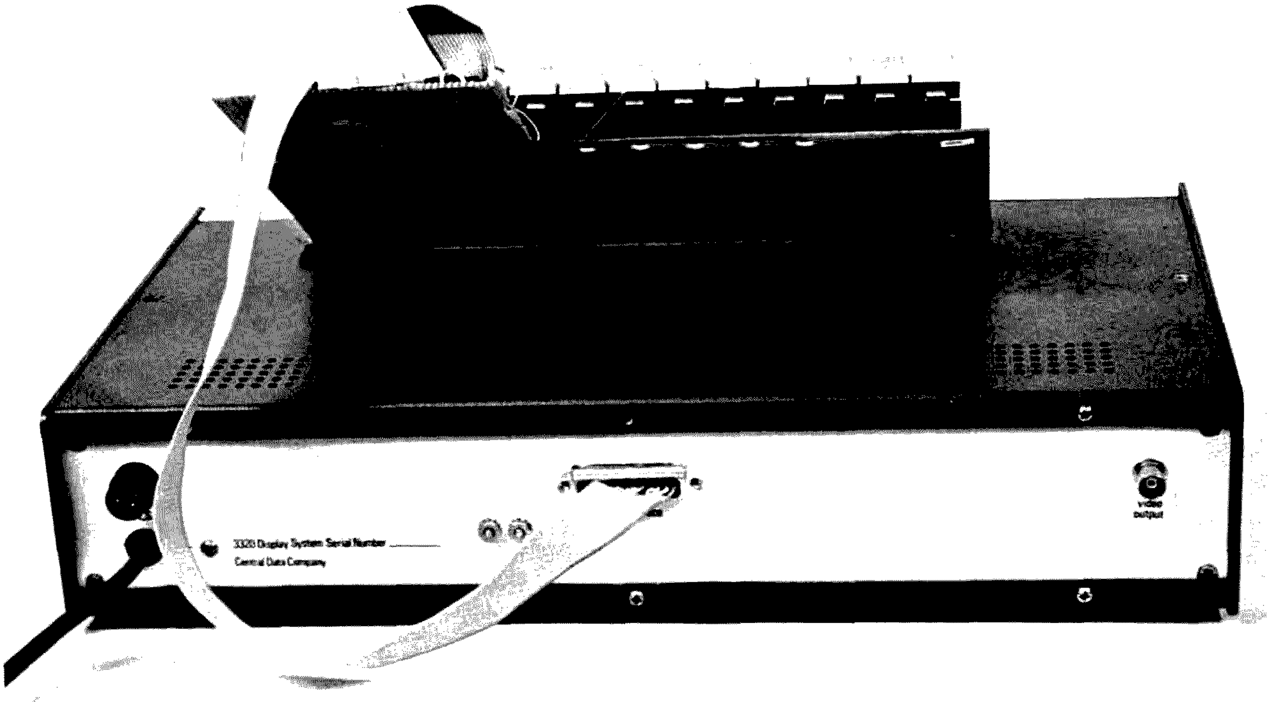
Central Data Company
video output

their normal states. Pin 5, therefore, goes high for exactly one cycle of the timing chain. The clear line sets the second and third type D flip flops to the correct states.

Pin 5 of 36 is sent to different parts of the cursor control section depending on the setting of the control bits. If bits 6 and 7 of the input data are not both low, a standard update cycle begins. This is where the input data is put into memory and the cursor is moved one position forward or backward. If, however, bits 6 and 7 of the input data are both low, a line feed (LF) cycle begins. If an LF cycle happens with bit one low, then a line feed is initiated (the cursor moves straight up or down one line).

If bit one is high during an LF cycle, the cursor moves back to the beginning of the line, and then up or down one line. In this case, a set to 40 pulse is created at pin 11 of 38 since bits 6 and 7 are both low (1 of 37 is high) and bit one is high. This status is ANDed with the up or down pulse (only created during an LF cycle) to arrive at the set pulse. The any cycle line is hooked directly to pin 5 of 36, so it goes high for one cycle after strobe drops no matter how any of the data bits are set. Fig. 7 shows the ASCII codes as used in the 3320 display unit.

Cursor Control

The cursor control section can be thought of as a chain of flip flops that divide their input by 1000. The clock for this divider sends a pulse during the first scan line (L1), above where each character could be. The divider is actually a divide by 40 chain placed in front of a divide by 25 chain. Since the total chain divides by 1000, and 1000 clock pulses are created each frame, the output of the last stage of the divider will drop once each frame. When this output drops, the cursor is displayed on the screen.

To move the position of the cursor, the divider must drop at a different time in the frame. This can be accomplished since the input of the divider can receive pulses from either the character clock generator or a special circuit that either adds or takes away pulses.

If an extra pulse is fed to the divider, the output will drop one character earlier. If a pulse is taken away, the output will drop later, since it will take longer to count 1000 pulses. Instead of taking away pulses, a long pulse is created that "covers" two normal pulses, as shown in Fig. 8. So if we want to move the cursor back one position, an extra pulse is added between the normal character clock pulses. If we want to move the cursor ahead one position, we cover up two pulses by adding one long pulse. The pulse, whether short or long, is created when the update cycle drops, setting pin 9 of 22 high. Pin 9 of 22 goes low the next time that the E clock rises, and will stay low until the update cycle drops again. If the FWD/BKWD line is high, this pulse goes through an AND gate to set a set/reset flip flop, IC23. The next time that the G clock goes high, the set/reset flip flop gets reset. This flip flop, therefore, stays set for the first two character positions of the frame. The output of this flip flop is called the forward pulse.

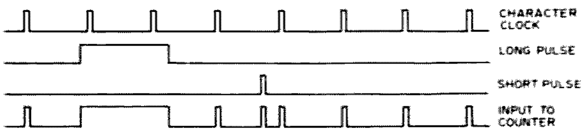

Fig. 8.

When pin 9 of 22 is high, an A clock pulse is sent through an AND gate to pin 12 of 20. This pulse is called the backward pulse. Even though it seems that two pulses would come out of this gate each update cycle, only one does. This is because there is a propagation delay between the A clock and the T clock. Because of this small delay, the T clock (and the update cycle) drop in the middle of the first C clock of the frame. Therefore, the very first A clock pulse of the frame does not get through to pin 12 of 20, but the second one does. By the time that the third A clock pulse comes, pin 9 of 22 has been reset to 0. The one short pulse that does get through is called the backward pulse.

The character clock, forward pulse, and backward pulse are all ORed together to form the input to the divide by 40 chain. If there wasn't just an update cycle, only character clock pulses get through. If there was just an update cycle and the FWD/BKWD line is low, the backward pulse will also get to the clock of the divider. This will clock the divider one extra time, so its output will drop one position earlier. If there was just an update cycle, and the FWD/BKWD line is high, the forward pulse gets through and covers the first two character clock pulses as well as the backward pulse. There is one less clock pulse this frame, so the divider drops later.

The divide by 40 chain consists of circuits 30 and 31, and its output is pin 11 of 31. When this output drops, it clocks pin 6 of 32, setting pin 11 to a low state. On the next character clock pulse this flip flop is set (pin 11 goes high) and stays that way until the counter drops again.

The divide by 25 chain operates the same way that the divide by 40 chain does, as far as adding pulses to move the cursor. To move the cursor up, an extra pulse is added, making the divider drop one line earlier. If the cursor is to move down, a long pulse is created to cover up two normal pulses. The normal clock to this divider is pin 11 of 32, which goes through IC28 to get to the divider (circuits 33 and 34). The dropping of the LF cycle line sets off the extra pulse generators in the divide by 25 counter chain. It sets pin 12 of 24 high, but that pin is soon reset when the E clock rises. If the FWD/BKWD line is high, the pulse from this flip flop goes through an AND gate and sets a flip flop, circuit 27. The $\bar{Q}$ output (pin 4) of this flip flop goes low immediately and rises again when the P clock goes high. The $\bar{Q}$ output of this flip flop is therefore low for two character lines (16 scan lines), and is called the down pulse. Pin 12 of 24 also is ANDed with the A clock to create a short pulse (the up pulse). The reason two pulses are not created is the same as was explained for the divide by 40 chain.

The up and down pulses, along with the normal clock from pin 11 of 32, are run through an AND gate and sent to the clock input of the divider. If a line feed cycle has just happened, and the FWD/BKWD line is low, the short pulse from pin 12 of 26 is added on to the normal clock pulses, causing the cursor to come one line earlier. If the FWD/BKWD line is high, the long pulse from pin 4 of 27 covers the first two normal clock pulses and the up pulse. Note that the up and backward pulses come even if the FWD/BKWD line is high, since they will be blocked out by the down and forward pulses anyway.

The divide by 25 chain consists of circuits 33 and 34, and its output is pin 11 of 34. This output is the clock input

to a J-K flip flop, pin 1 of 32. When the output of the counter drops, the flip flop changes states, and pin 14 of 32 goes high. This flip flop is reset by the next character clock pulse, so pin 14 of 32 goes high for only one character width.

This line is called character position and goes to the chip enable of the character generator, which causes the generator's output to go high (display white on the screen). This is the cursor, and it goes to a blinker circuit before it gets to the character generator, which switches it off and on at the rate of about two times per second.

The character position line is ANDed with the update cycle and that pulse is sent to the page memory location that it is now at. The memory therefore gets changed during the update cycle, while the position of the cursor gets changed during the frame immediately following the update cycle.

To clear the display and move the cursor to the upper right hand position of the screen, the clear line is brought high. This brings the write line of the page memory high. It also brings the input to the memory bit 6 high. All keyboard data is gated to the memory inputs only when the update cycle is high, so the other five data inputs will be low. The ASCII code for a space is all bits low except for bit 6. So what will happen is that the memory will take the input data (space) and keep putting it into memory until the clear line goes low. If the clear line was high long enough to allow all of the memory positions to be accessed (1/60 second), the memory will be filled with blanks.

Now that the screen is blank, the cursor has to be moved to the first position of the page. To do this, both of the cursor divider chains are set to all ones; on the next clock pulse the divider's

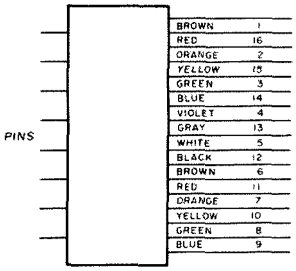

Fig. 9.

outputs will drop, displaying the cursor. A set/reset flip flop is set when clear goes high, and its output (pin 13 of 27) is used to preset the divider chain. Since the first clock pulse that gets to the divider must be at the beginning of the frame (so the counter will drop after the first clock pulse, or in the first character position), the preset line must go back to its normal state at the beginning of the frame. The preset line goes low the first time that the $\overline{T}$ clock goes low, after clear drops. Since the $\overline{T}$ clock goes low at the beginning of the frame, so does the preset pulse, and the dividers are now clocked.

Next Line Blanking

The next line blanking schematic can be found in Fig. 18.

The next line blanking circuit makes sure that, after you fill the screen and are about to start writing over old information, old information gets erased. It clears the screen line by line, as the cursor moves downward.

The lines get "blanked" under the following two conditions:

1. If the cursor is detected in the first character position of a line. In this case, the line that the cursor is on gets filled with blanks.

2. If a line feed is initiated. (The cursor moves straight down.) In this case, the line below the cursor's gets filled with blanks. Therefore, after the line feed is finished, the cursor is on the blank line.

To find whether or not the cursor is in the first position of any line, character position is ANDed with a signal that is high only in the first position of each line. This signal is pin 12 of 40, which is a J-K flip flop that gets set at the beginning of a line and reset after the first character position of the line is passed. Since the first $\overline{\text{load}}$ pulse lags behind the first line clock pulse by one character (as explained in the memory section), when both of these are high, and we are in the character area, we are also in the first position of a line.

As was stated earlier, this pulse is ANDed with character position, and if it is not "any cycle" or the frame right after it, it is used to set a flip flop (circuit 43). This flip flop's output (pin 13) is reset to zero the next time the K clock goes high (at the end of the scan line). This line goes on to bring the write line of the memory high, along with the bit 6 input, so that the memory gets filled with spaces. Since this line goes high at the beginning of a scan line and drops at the end of it, 40 locations of memory get filled with spaces. The memory gets written with spaces every cycle that the cursor is in position one.

In the second case, if an LF cycle occurs, it is ANDed with character position to set a flip flop (circuit 43). This will bring pin 4 of 43 high, and will allow the next flip flop (circuit 24) to toggle. This will happen the next time the N clock drops, or at the beginning of the next character line. This pulse is fed back to the first flip flop and resets it. The line is reset the next time that horizontal sync goes low. Therefore, the line goes high for almost one scan line, on the character line below the line where the cursor now is. (Remember that the cursor moves after an LF cycle drops.) This line also is fed to the write line of the page memories and to set bit 6 of the inputs high.

To turn the next line blanking feature off, jumper on the board the two pads marked NLB. This grounds pin 11 of 29, and doesn't allow a write pulse to go to the memory.

Power Supply

The power supply schematic can be found in Fig. 14.

The power supply has provisions for +5, -5, and -12 volts at 2, .15, and .5 Amperes, respectively. The +5 supply consists of a 12.6 V, 2 A, C.T. transformer whose output is rectified and filtered and sent to two 7805 (LM340T-5) regulators. The two regulator chips are mounted to the cabinet and are hooked up in parallel.

The -12 supply is obtained by rectifying and filtering a 28 V, .85 A, C.T. transformer and feeding it into a 7912 (LM320T-12) regulator chip. The output of this chip is -12, and that output is sent to the -5 regulator. This consists of a zener diode hooked to the base of an MJE370 transistor. The output is between -5 and -6 volts.

All outputs are filtered with .1 disc capacitors and 100 uF electrolytics to improve regulator response and to filter out noise.

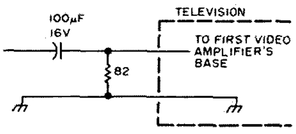

Fig. 10.

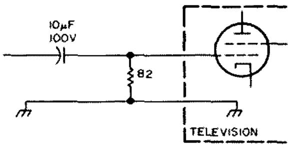

Fig. 11.

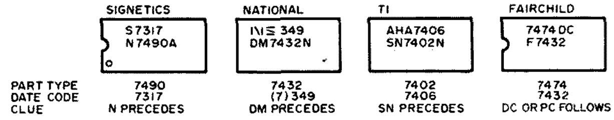

Fig. 12.

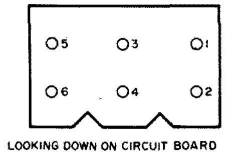

Fig. 13.

Troubleshooting

Power supply: When the board is finished, the power supply is not connected to the logic circuits. This prevents high voltage from ever reaching the integrated circuits, unless the power supply fails after it is initially tested.

To test the power supplies, the transformer is plugged into the board (through the molex connector) and the voltages are measured at the terminals marked +5, -5, and -12. If all of the voltages are correct (according to the table below), the three sets of pads can be jumpered, and the voltages measured again. If the voltages are still OK, the logic test procedure can begin. If not, you should start checking for solder shorts on the power supply lines.

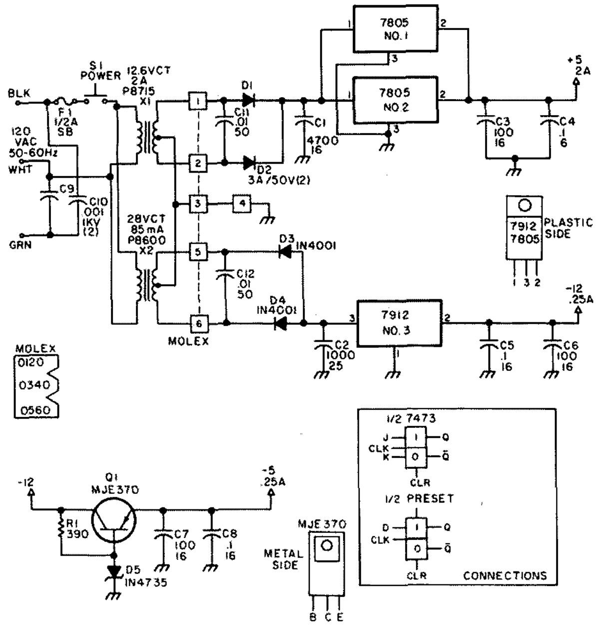

Fig. 14. Power supply.

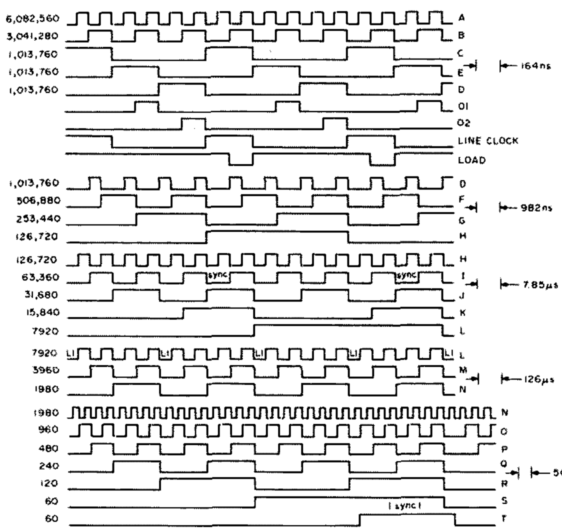

Fig. 15. Timing chain.

	Max.	Min.
+5	4.75	5.25
-5	-4.80	-5.90
-12	-11.7	-12.3

Logic testing: The 3320 display has a self-test feature which makes troubleshooting much easier. With this you can see any pulses that happen in the "visible" area of the frame. The visible area means any area of the frame that can be displayed on a television. Therefore, you can't see the sync pulses, and you must have these pulses to be able to display anything at all.

To use self-test, disconnect the jumper between the output shift register and pin 1 of 56 (between points D and E). This will take any video data that you may have off the screen. Next, connect pin 1 of the input connector to the signal line that you want to check. There should be a series of horizontal (for slower clocks) or vertical (for faster clocks) lines on the screen, where white is a logical one and black is a zero. To be sure that sync is there, and to be sure that the display is hooked to your television correctly, follow the above procedure and hook your jumper to a moderately fast clock (such as the G clock). In this case you should see 10 or 11 pairs of black and white vertical bars on the screen. If nothing is there, first check the connection to your television; if you're sure that's OK, you will need a scope to check the sync pulses and the output of the buffer transistor. After you get self-test working, go through any circuit that you think is bad and look at all of the signals. Please note that only TTL level signals can be displayed using self-test, so don't look at the output of the page memory's clock driver, or either of the negative supplies!

If the unit does not work, the first thing to check is the timing chain. The T clock should be 60 Hz (one horizontal line on the screen). If it is not there, start at the A clock and work your way through the chain. If the master clock is not oscillating, be sure that IC1 is a 7404 made by Texas Instruments. If it is not, it must be replaced with one that is. If the timing chain is all right, check the Ø1 and Ø2 clock pulses at pins 3 and 11 of 19, respectively. There should be 1024 small white dots on the television screen. If there are only 1000, check the divide by 24 circuit, ICs 21, 13, and 22. If there are dots all over the screen (many more than 1024), make sure that character area is high only for the area shown in Fig. 2, and that the divide by 24 circuit is working. L1 should be one horizontal scan line out of eight white, while load should be somewhat similar to the C, D, and E clocks, except the pulses will only appear during character area.

If everything seems to be OK in the timing section, check the cursor control. If a cursor appears on the screen, but won't move when pulsing the strobe line, first be sure that the jumper is in for positive or negative strobe! Then, see if there is a pulse at pin 5 of 36 that lasts exactly one frame (it will appear as a flash on the screen). If this pulse is not there, try clearing the unit by bringing the clear line to +5 volts. Because of the random states that logic

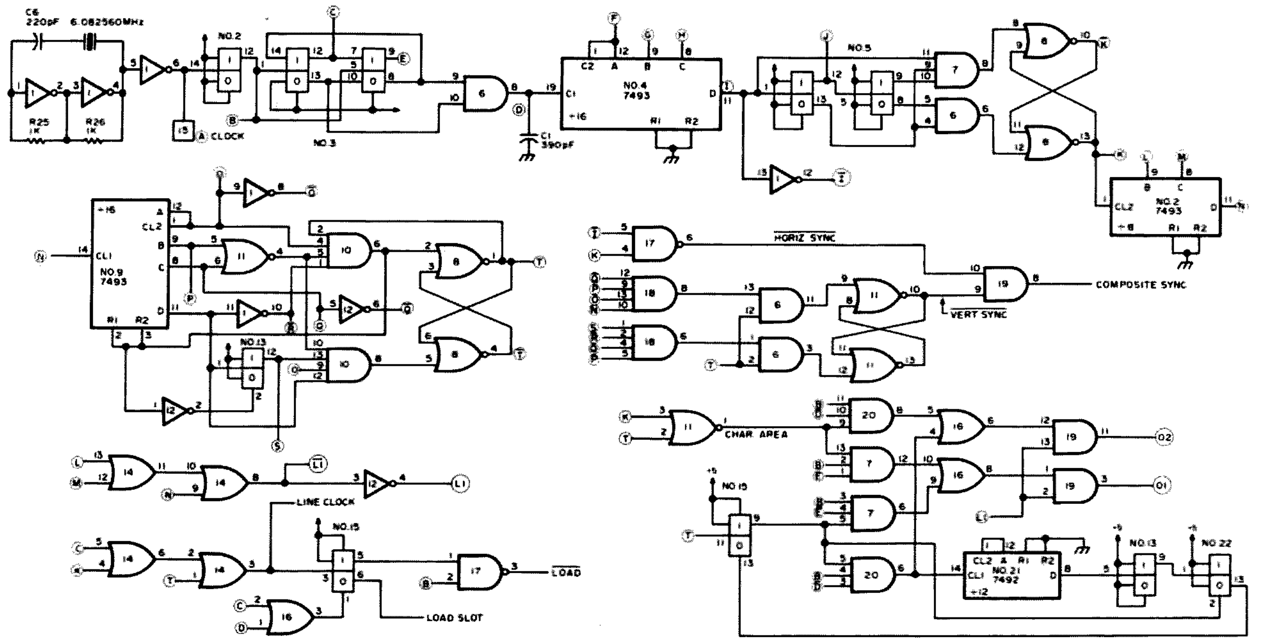

Fig. 16. Timing.

comes up in, some units must be cleared before data can be entered.

If a cursor doesn't appear, look for a character clock (1000 pulses on the screen) at pin 11 of 25. Be sure that this is clocking the flip flops and the divide by 10 (ICs 30 and 31). There should be 25 short normally high pulses per frame at pin 11 of 32. These 25 pulses are sent through an AND gate to clock the two divide by five circuits. If nothing is clocking, check the clear lines to the flip flops and the dividers. The output of the second divider (IC34) should cause flip flop IC32 to toggle once per frame. This flip flop will soon be reset by the next character clock pulse. This line is called character position, and is used to put the cursor on the screen and to bring the write line of the memory high during an update cycle.

If the timing and cursor sections both work, but the memory either won't enter data, won't fill with spaces when the clear line is brought high, or is creating random characters on the screen, the

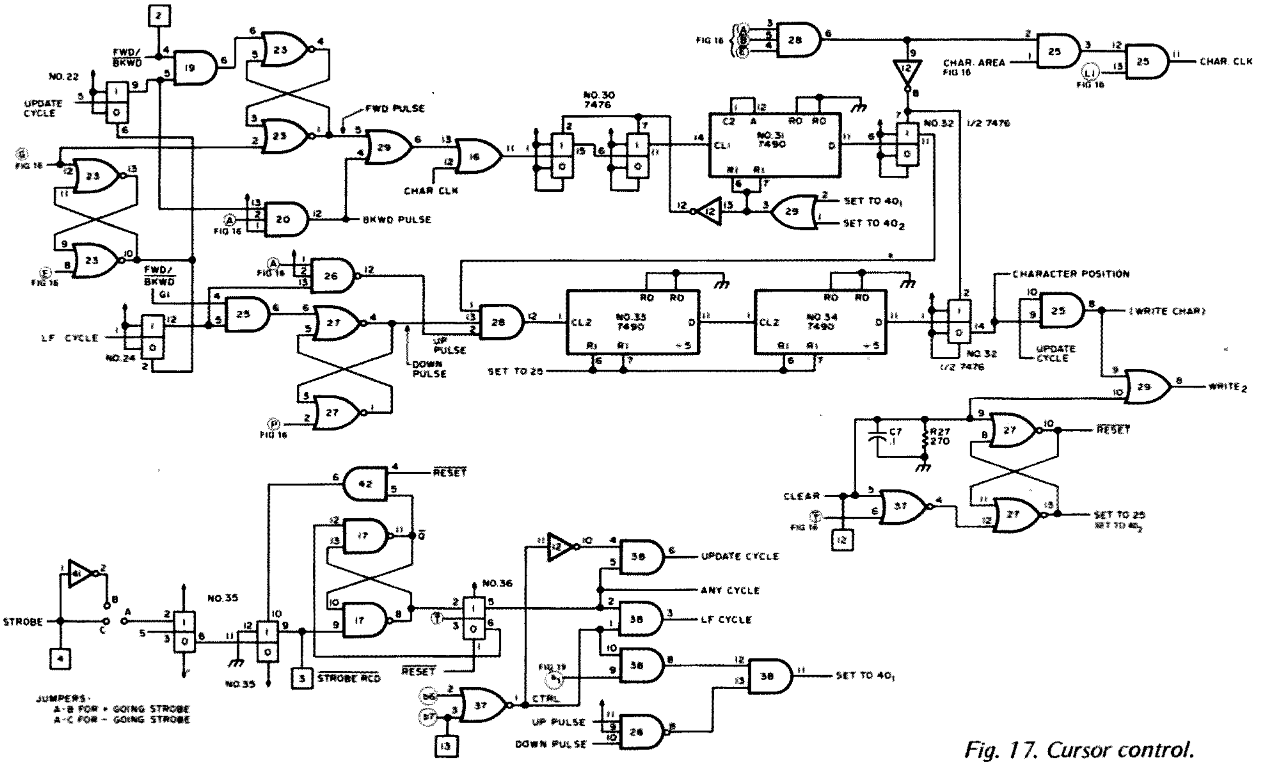

Fig. 17. Cursor control.

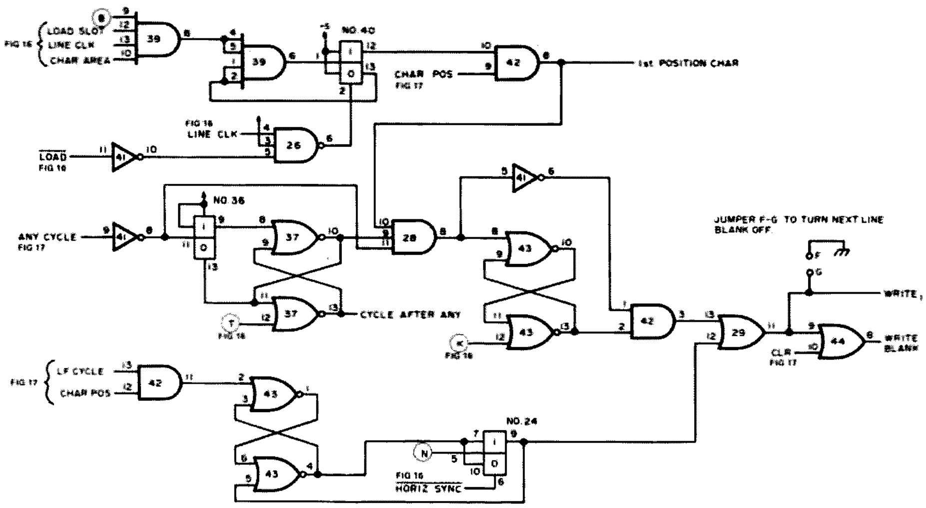

Fig. 18. Next line blanking.

memory section of the unit must be checked. First, if the screen has a series of vertical white lines on it, check pin 11 of 53 for a low. If it is not low (it should go high for a brief period to display the cursor), the character generator chip is not enabled and all ones will appear at its output. If this is not the problem, check all of the TTL level clocks such as L1, Ø1, Ø2, A clock, and the line clock. If these seem all right, check to be sure that the write line (pin 5 of circuits 46-51) goes high for a very short period during an update cycle. If it does not, check back through the circuit for the two write lines to see where they stop working. If everything is OK so far, you will need an oscilloscope to check the outputs of the clock drivers, circuit 45. There should be very little overshoot on these two clocks, and they must swing from about +5 to -12. *Do not look at these high level clocks with self-test. If this was done, circuit 56 must be replaced.* If the screen has a lot of characters that are shifting randomly, be sure that there are 1024 clock pulses at pins 11 and 3 of 19. If there are 1024 pulses per frame (on the screen), you must check the high level clock pulses from the clock driver *with an oscilloscope.*

If everything works except the next line blanking, be sure that you did not jumper the NLB pads on the circuit board, which will cause the next line blanking feature to be turned off. If the feature works with a line feed but not for a character in the first position, move the cursor to the first position of any line and check for a short pulse at pin 8 of 42. There will only be one pulse per frame. If it is not there, be sure that pin 2 of 40 is not always grounded, causing the flip flop to stay cleared, and that the same flip flop is being clocked at pin one. If that pulse is OK, see if it is getting through if it is during an update or line feed cycle (any cycle) or is the cycle after such. Pin 9 of 28 goes low for the cycle after any cycle. The pulse at pin 8 of 28 sets a set/reset flip flop, circuit 43, at pin 8, which brings the write line high. The line goes low when the K clock comes again. If the unit does not blank the next line after an LF cycle, see if the flip flop, circuit 43, is being set at pin 2, making pin 4 go high. If it is not, be sure that pin 5 is not always high, holding it reset. If pin 9 of 24 is always low, be sure that pin 10 of that circuit is not pegged low, keeping the flip flop cleared. The output of this flip flop also goes to set the write line high for one line.

If you find that a circuit is "bad," first check the following things:

1. That the power supply and ground are at acceptable levels on the chip.
2. That all of the input signals are within TTL specifications (low is less than .8 V; high is greater than 2.4 V).
3. That there are no unsoldered pins to the circuit, and no etch or solder shorts between a wire running to the chip and something else.

A large number of problems can be solved by checking these things before replacing an integrated circuit.

Operation

All connections to the keyboard and video monitor are through a DIP plug and a

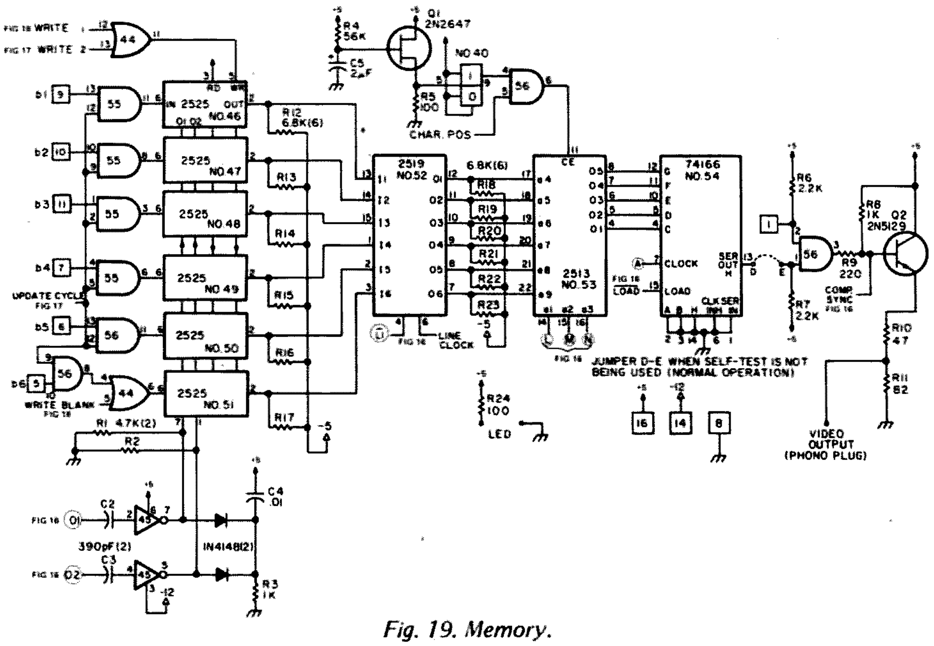

Fig. 19. Memory.

phono plug, respectively. The phono plug goes directly to the input of your monitor. It is the 2.25 V composite video signal whose waveform was given in Fig. 3.

The other connector consists of a 16 pin DIP socket soldered to the board, along with a cable that has a plug which will fit the socket. The cable's wires correspond to the pins on the plug as is shown in Fig. 9.

The signals that are available at the socket are listed in Fig. 19, the memory schematic. The $\overline{\text{strobe received}}$ signal is an output that acknowledges receipt of

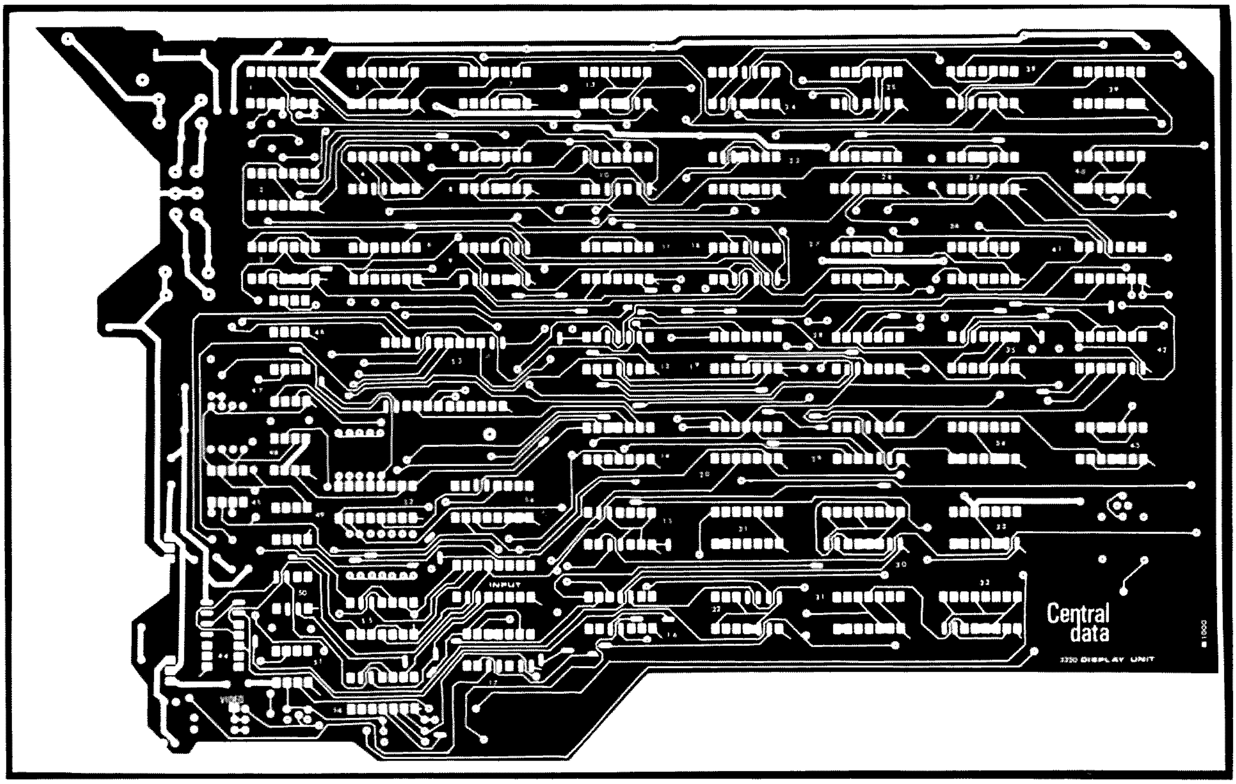

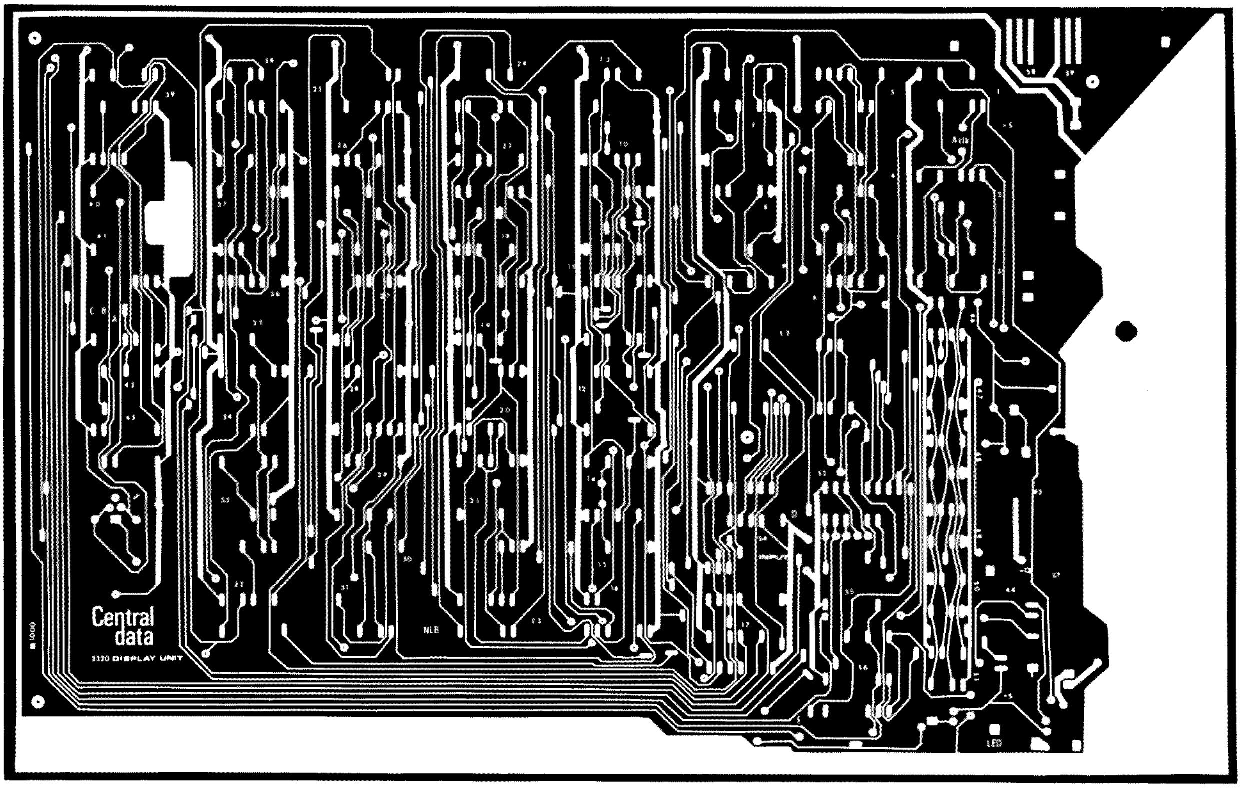

Fig. 20. PC board and component layout.

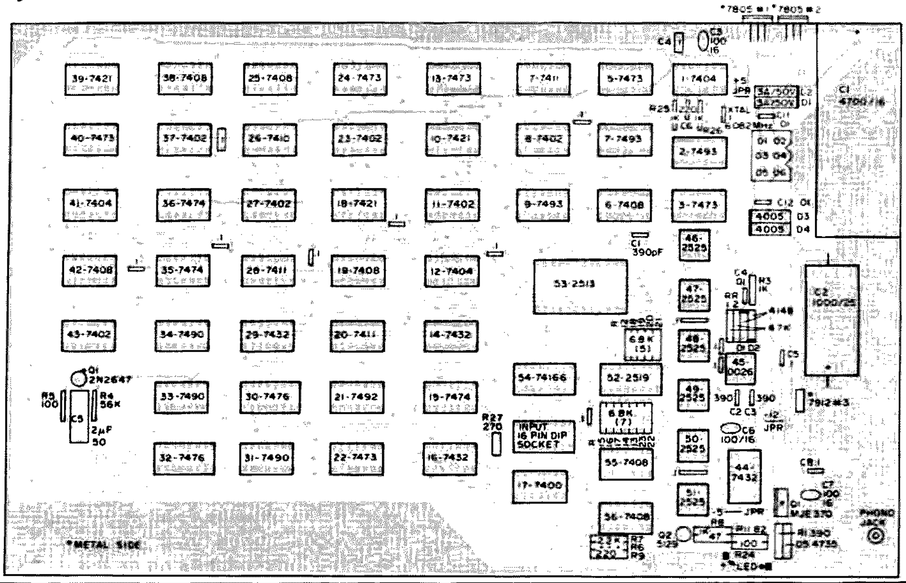

the strobe signal. It is a very short pulse that is used by the input options as well as some types of keyboards. Bringing CLEAR high will empty the screen and move the cursor to the upper left hand position. Sometimes, because the logic comes up in random states, the unit will have to be cleared before it will operate.

FWD/BKWD is an input that decides in which direction the cursor will move. If it is high, the cursor will move forward or down, while if it is low the cursor will move backward or up.

If you have an input option there is another DIP socket on the small option board which matches the one on the main board. The cable in this case had a DIP plug on both ends.

Modification of Your Television

WARNING: Do not attempt to use as a video monitor any television that has one side of the ac line connected to the chassis or to ground. To connect such a television will probably cause major damage to your display unit. The modification procedure is simply a matter of capacitively coupling the video output from your display unit to the first video amplifier stage of your television.

If you have a transistor television, use the circuit of Fig. 10 as a guide for the modification. If you have a tube type set, the circuit of Fig. 11 can be used.

With the tube type television, a higher voltage may be required to provide adequate contrast. A video amplifier can be inserted between the video output and the capacitor to solve this problem. With either set, there is a small possibility that it requires positive sync polarity. Since the data is transmitted with negative sync, a video inverter must be

Parts List

TTL Integrated Circuits
1 7400
6 7402
3 7404
7 7408
1 7410
3 7411
3 7421
4 7432
6 7473
3 7474
2 7476
3 7490
1 7492
3 7493
1 74166

MOS Integrated Circuits
1 MH0026CN
1 2513
1 2519
6 2525

Semiconductors
1 2N2646
1 2N5129
2 1N4148

Resistors (all ¼ Watt)
1 47
1 82
1 100
1 220
1 270
4 1k
2 2.2k
2 4.7k
12 6.8k
1 100k

Capacitors
1 220 pF disc
3 390 pF disc
1 .01 uF disc
13 .1 uF disc
1 2 uF/16 V, electrolytic
2 100 uF/16 V electrolytic

Miscellaneous Parts
5 Plastic standoffs
1 6.082560 MHz crystal
1 16 pin DIP socket
1 16 pin DIP plug with cable
1 phono jack
1 phono plug
1 Central Data B1000 circuit board

The following apply only if an on-board power supply is being built.

Semiconductors
2 7805 or LM340T-5
1 7912 or LM320T-12
1 MJE370
1 1N4735
2 1N4001
2 3 Ampere diodes

Capacitors
1 1000 uF/25 V electrolytic
1 4700 uF/16 V electrolytic
2 .01 disc
2 .001 disc (1kV)
2 .1 disc
1 100 uF/16 V electrolytic

Other Parts
1 390 Ohm, ¼ W resistor
1 1 Ampere fuse
1 fuse holder
1 line cord
1 strain relief for line cord
1 SPST toggle switch
1 Molex 03-09-1064
1 Molex 03-09-2062
6 Molex 02-09-1133
6 Molex 02-09-2143
1 Stancor P-8715 transformer
1 Stancor P-8600 transformer
Plus other misc. hardware

inserted between the display unit and the television.

Assembly: General Information

The circuit boards used in the 3320 display system are all double-sided with plated-through holes. Because of this you only have to solder the components on the bottom of the board. The plated-through holes make the connection to the top of the board. The components should be soldered with a low wattage (40-60 W), moderate temperature (approximately 750°) soldering iron. The iron should also be grounded when soldering the MOS integrated circuits. This is not absolutely necessary, however.

Be sure to mount all integrated circuits according to their pin one mark, not their lettering. Occasionally a circuit is lettered upside down. Most ICs are printed with both a part number and a date code. The date code consists of the year and the week that the circuit was produced. Example: January 30, 1977=7705.

The placement of the part number and date code for most circuits is shown in Fig. 12.

Also, be very careful to prevent solder shorts. This type of problem is very difficult to find later, so if it is done with care now it will save you a lot of time when troubleshooting.

Note that all pin one markers on the integrated circuits are towards the lower left hand corner of the board, except for circuit 44, which is toward the lower right hand corner. IC1 must be a Texas Instruments circuit; otherwise you are not assured that your master clock will oscillate. A square pad on the top of the board indicates the cathode (banded) end of diodes and the positive end of electrolytic capacitors.

Be sure to jumper the two terminals marked "A clk" near circuit 1. If you ever want to run your display off an external clock, break the jumper and connect the external clock to the lower pad. Also jumper the correct pads between circuits 41 and 42 corresponding to the polarity of your strobe pulse. If you are running off an external power supply, wire your power supply to the circuit side of the three sets of pads marked +5, -5, and -12. Also jumper pads D and E to connect the shift register to the buffer transistor.

A phono jack is installed in the ¼ inch hole, and a jumper is made between its center and the pad on the bottom of the board marked VIDEO. Connection to your monitor can be made using a phono plug and some RG-174U cable.

If you are going to use the on-board power supply, follow the parts placement diagram shown in Fig. 20. Be sure to mount the 7912 and the MJE370 transistor on heat sinks. The two 7805 regulators must be mounted at right angles to the board, and must be attached to a heat sink at least 4" x 9" x 1/16", if aluminum. To mount the regulators to the board, bend the leads (where they taper off) at a 90° angle. Then put some solder on each of the leads, along with the pads on the circuit board where they will be mounted. Then set one regulator on the circuit board and, one by one, heat the leads so that the solder melts and attaches the lead to the board.

Solder the transformer leads to the off-board molex connector using the configuration shown in Fig. 13. Two .001 disc capacitors should be placed across the power line to prevent high frequency noise from leaving the unit through the line. ■

James Whitfield
PSC Box 3204
Edwards AFB CA 93523

Your Computer Can Talk Morse

-- even a computer can learn the code!

So you have that new-fangled "computer" in your shack. You are through with the headaches of wiring it and you have gotten past the frustration of programming it to type out your name. You are even to the point that you understand some of the games that came with it so well that you can cheat the machine. What's that? You want to try something else? How about calculating Oscar orbits? No. Well . . . how about true bearings and distances to DX contacts from longitude and latitude information? No? You want it to do something, not just arithmetic.

I've got it! You've been wanting one of those keyboard to Morse code units. Why not program the computer to convert ASCII to Morse? Then you could send prepared text, CQs, or just copy from the keyboard that you have. Say again, OM? How? Oh, sure, I remember a few ways to convert data. OK. Here goes . . .

First, you need a method of generating the Morse characters. You need some way for the computer to turn a relay or TTL circuit on and off. From there, you can drive the keyed circuit in your rig. Sorry, I can't help you with the hardware. Maybe one of the other fellas can help.

Next, you need some way to time the on and off periods. A timing loop. You never heard of a timing loop? Every instruction in the machine takes a certain amount of time, right? Let's assume that we have a routine (a short program segment) that will place a number in a register, then subtract one from the register, then check to see if the number left in the register is zero. If the result is not zero, the routine returns to the subtract instruction. If it is zero, then it executes the next step of the program.

What has the routine done? Nothing, really, but that is the point. The computer has been twiddling its thumbs for as long as it takes to count down that register. Now, if it takes 30 microseconds to subtract one from the register, test the register for zero, and branch back to the subtract instruction; then by changing the number that you start with, you can adjust the timing. (If you start with

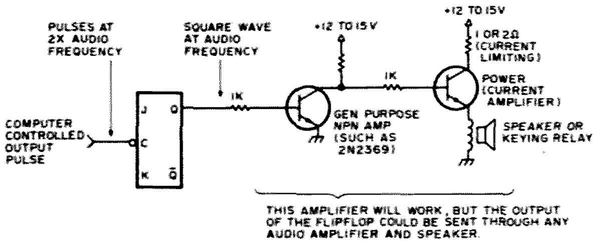

Fig. 1.

Item No.	Character Table	Value Table
1	A	13
2	B	87
3	C	119
4	D	23
5	E	1
6	F	117
7	G	31
8	H	85
9	I	5
10	J	253
11	K	55
12	L	93
13	M	15
14	N	7
15	O	63
16	P	125
17	Q	223
18	R	29
19	S	21
20	T	3
21	U	53
22	V	213
23	W	61
24	X	215
25	Y	247
26	Z	95
27	double dash — —	855
28	understood	469
29	attention	884
30	Ø	1023
31	1	1021
32	2	1013
33	3	981
34	4	853
35	5	341
36	6	343
37	7	351
38	8	383
39	9	511
40	comma ,	3935
41	period .	3549
42	question mark ?	1525
43	semicolon ;	1911
44	colon :	1407
45	parenthesis ( )	3575
46	quotes "	1885
47	dash —	3415
48	fraction bar /	471
49	apostrophe '	2045
50	wait	173
51	end of message	477
52	end of work	3541
53	blank	0
54	error	21845

Table 1.

6000 that will give 6000 x 30 usecs = 180,000 usecs or 180 msecs.)

Now, suppose that we take a number, like 117, and divide it by 4 (generating the quotient and the remainder). Q = 29; R = 1. If the remainder is a 1, send a dit; if it is a 3, send a dah. Now take the quotient and divide it by 4. Q = 7; R = 1. Again we send a dit. Divide the quotient again by 4. Q = 1; R = 3. This time we send a dah. Again, divide by 4. Q = 0; R = 1. Another dit. Divide again by 4. Q = 0; R = 0. This time the result is zero, which is the signal to stop sending the character. Dit dit dah dit came out F the last time I heard it.

Table 1 contains two lists. The first is a list of characters. The second is a list of the numbers that correspond to the characters in the first list. Notice that some of the characters do not have ASCII symbols. You will have to assign them some arbitrary symbol from your keyboard if you want to use them.

Now, to convert the ASCII code to the number set that I have shown you. There are two ways to program the computer to look down the table of numbers. The first is to treat the ASCII character you are trying to convert as a binary number that can be modified by arithmetic into another number that will specify to the program the position in the number table of the proper number for the original ASCII character. It is not really as complicated as it sounds.

The second method is to have a second table in the computer that contains ASCII characters in the order shown in Table 1. The program then steps down the character table looking for the proper ASCII character. When it is found, the program then looks the same number of steps down the number table, and there it is!

The only thing left to do is get the next ASCII character, and start the table lookup all over again.

Table 2 shows the FORTRAN program that I used to verify the method. I took out the machine dependent portions to make the method easier to understand. For those of you not familiar with FORTRAN, the program statements that begin with C are comments and are used to explain or clarify the preceding instructions. The CALL statement tells the program to turn control over to a subroutine (a program segment that performs a task and then returns to the point after where it was called). The variable names that are in parentheses following the subroutine name are called arguments and are used to pass information from the main program and the subroutine.

The GO TO 50 statement tells the computer to take its next instruction from the statement that is labeled 50, which I did not include in this portion of the program. The string of asterisks (usually called stars because

Table 2.

```
      *
      *
      *
C
C     AT THIS POINT THE ASCII CHARACTER TO BE CONVERTED IS IN  I
C
      CALL TBL (I,K)
C
C     TBL IS THE TABLE LOOK UP SUBROUTINE
C     K CONTAINS THE MORSE WORKING NUMBER UPON RETURN
C
      CALL MORSE(K,M1,M2,)
C
C     MORSE IS THE SUBROUTINE THAT GENERATES THE MORSE CHARACTER
C     M1 IS THE LENGTH OF A DIT IN MILLISECONDS (1200 MS/SPEED IN WPM)
C     FOR THE SPEED THAT THE CHARACTER IS TO BE SENT.
C     M2 IS THE LENGTH OF THE PAUSE BETWEEN CHARACTERS (1200 MS/WPM) FOR
C     USE IN MAKING PRACTICE TAPES WITH EXAGGERATED PAUSES.
C
      GO TO 50
C
C     OBTAIN THE NEXT ASCII CHARACTER
C
      *
      *
      *
      SUBROUTINE TBL(I,K)
      DIMENSION ICHAR(54),NUMBER(54)
C
C     THIS SUBROUTINE SCANS THE TABLE OF ASCII CHARACTERS IN ICHAR FOR
C     A MATCH TO THE CHARACTER IN I. ON A MATCH IT RETURNS THE
C     CORRESPONDING MORSE WORKING NUMBER FROM NUMBER IN K. NON-MATCHES
C     ARE CONSIDERED ERROR CHARACTERS. (THE 54TH CHARACTER)
C
      DATA ICHAR/ 1HA,1HB,1HC,1HD,1HE,1HF,1HG,1HH,1HI,1HJ,1HK,1HL,1HM
     1   1HN,1HO,1HP,1HQ,1HR,1HS,1HT,1HU,1HV,1HW,1HX,1HY,1HZ,1H=,1HΛ,
     2   1H@,1H0,1H1,1H2,1H3,1H4,1H5,1H6,1H7,1H8,1H9,1H,,1H.,1H?,1H;,
     3   1H:,1H(,1H",1H-,1H/,1H',1H%,1H+,1H*,1H ,1H#              /,
     4 NUMBER/13,87,119,23,1,117,31,85,5,253,55,93,15,7,63,125,223,29,
     5   21,3,53,213,61,215,247,95,855,469,884,1023,1021,1013,981,853,
     6   341,343,351,383,511,3935,3549,1525,1911,1407,3575,1885,3415,
     7   471,2045,173,477,3541,0,21845                  /
C
      DO 5 J=1,53
      IF(ICHAR(J).EQ.I) GO TO 7
5     CONTINUE
      J=54
7     K=NUMBER(J)
      RETURN
      END

      SUBROUTINE MORSE(K,M1,M2)
C     THIS ROUTINE CONVERTS K INTO MORSE ON AND OFF PULSES
C
      I=K
      IF(I.EQ.0) GO TO 20
C
```

nobody can say that other word) indicates that there is more to the program that is not included.

The SUBROUTINE statement identifies the coding to the next END statement as a subroutine with the name specified, and is completely independent of all other coding. The DIMENSION statement indicates that ICHAR and NUMBER are arrays or tables with 54 elements. The DO loop, indicated by DO 5 J=1,53, states that J is to be set to the value 1, (then) all statements up to and including the one labeled 5 are to be executed, (then) the value of J is to be increased by one and the statements are executed again and again. After the statements have been executed with the value 53 in J, then the next statement after 5 is performed. The IF statement means that if the Jth element of ICHAR is equal to I, then jump out of the loop and take the next instruction from 7. The statement between 5 and 7 insures that an ERROR character (element 54 of the tables) is used if no match causes the jump out of the loop to statement 7. Statement number 7 puts the proper value into K and the routine is finished. This is indicated to the computer by the RETURN statement. Again the END statement is used to show the limit of the subroutine.

In the subroutine MORSE the argument K is transferred into the dummy or working variable I, and is then checked to see if it is zero (indicating a blank). The next statement uses the FORTRAN-supplied function MOD that performs modular arithmetic of the first argument by the second. (It finds the remainder of I divided by 4.) I=I/4 places the quotient of I divided by 4 back into I. That sets I up for the next pass through the loop. The remainder is then check for zero, which indicates the end of the character. The keyed circuit is then turned on by the subroutine ON. The call for the subroutine WAIT demonstrates that FORTRAN allows the programmer to specify an arithmetic operation inside the argument list. In this case J is to be multiplied by M1 and the result is then used as the argument to the subroutine. The value of J (either 1 or 3) times the number of milliseconds to wait for a dit will generate the proper spacing needed. OFF is used to (what else) turn off the keyed circuit.

The coding that I show for WAIT, ON, and OFF is intended only to illustrate the actions that they perform, not how to program them. There are far too many differences in the many computers around to attempt specifying any particular routine.

As you may have guessed, this program was checked out on a large computer system. And you probably do not have a FORTRAN COMPILER on your new system. That means that you will

```
C       CHECK FOR A BLANK
C
10      J=MOD(I,4)
C
C       FIND THE REMAINDER OF I/4
C
        I=I/4
C
C       FIND THE QUOTIENT
C
        IF(J.EQ.0) GO TO 15
C
C       CHECK FOR END OF CHARACTER
C
        CALL ON
C       TURN ON THE CIRCUIT
        CALL WAIT(M1*J)
C       WAIT FOR M1 X J MILLISECONDS  J=1  DIT   J=3  DAH
        CALL OFF
        CALL WAIT (M1)
C       TURN IT OFF FOR M1 MILLISECONDS
        GO TO 10
C       CHECK FOR NEXT DIT OR DAH
C
15      CALL WAIT(M2*2)
        RETURN
C       END THE CHARACTER AND RETURN FOR NEXT
C
20      CALL WAIT(M2*4)
        RETURN
C       SEND AN INTER-WORD SPACE
C
        END
        SUBROUTINE WAIT(N)
C
C       THIS SUBROUTINE WAITS N MILLISECONDS BEFORE RETURNING.
C
        DO 5 I=1,N
C
C       AT THIS POINT INSERT ANY ROUTINE THAT REQUIRES 1 MILLISECOND TO
C       PERFORM. IF K IS CHOOSEN PROPERLY, USE THIS –
C                         DO 6 J=1,K
C               6         M=K
C
5       CONTINUE
        RETURN
        END
        SUBROUTINE ON
C
C       THIS SUBROUTINE TURNS ON THE KEYED CIRCUIT. IT MAY HAVE TO BE
C       WRITTEN IN MACHINE LANGUAGE.
        RETURN
        END
        SUBROUTINE OFF
C
C       THIS SUBROUTINE TURNS THE KEYED CIRCUIT OFF. IT MAY HAVE TO BE
C       WRITTEN IN MACHINE LANGUAGE.
C
        RETURN
        END
```

have to write the program for your machine, but the method will work.

Come to think of it, you don't have to have your own computer, if you have access to one. A short length of wire near the right indicator lamp or other circuit, combined with the right timing loop, will pick up an rf signal that can be used to drive a circuit. This does require two timing loops, one with rf and one without. One school in the Army uses a transistor radio set next to an IBM 1401 computer to generate its code practice tapes.

Well, I hope you have fun programming your computer. What's that? What else can you do after that? Well, I was thinking about that. Of course on-off RTTY needs only a different table. FSK RTTY? Now if you had a two tone audio frequency oscillator, you could drive that into the mike input to your SSB rig; of course, that's 100% duty cycle and you might have to modify the power level some. I was thinking that, with about eight levels of gray (I mean eight stepped tones) and that SSB audio input scheme, why, we could generate some of the fanciest computer generated SSTV signals you ever saw.

Hmmmmmmm? Receive Morse with a computer. You know, I wrote some routines for that last week. It's easier to do RTTY because the timing is all the same. Morse from an electronic keyer is not too bad, but I'm sure I found the way to copy even the poorest fist. Tonight? Aww, come on! It's 2:00 am now and I gotta catch the bus for work by seven . . . What? Sure computers can draw things on the line printer – some can give better resolution than a TV set. Record SSTV and print it out? Why not just print out QSL cards complete with addresses. Fully automated QSO? Yeah, but suppose the other guy is a computer, too? . . . ■

Dick Whipple
305 Clemson Drive
Tyler TX 75701

John Arnold W5CUD
RFD 4, Box 52A
Tyler TX 75701

Inexpensive Paper Tape System

--using 5 level tape with computers

Serious program development requires the use of nonvolatile mass storage of some type. Cassette tape systems are popular among computer hobbyists, and for good reason. Cassettes are convenient, inexpensive, and provide a high density medium for mass storage. Much has appeared in the literature concerning cassette recording techniques. The use of punched paper tape for mass storage has not been adequately treated, although it is readily available to hobbyists interested in Baudot equipment. Paper tape is not nearly as fast or as dense as cassette tape, but it ranks high in convenience and reliability. Programs can be stored on individual strips of tape and labeled for later use.

The Model 19 Teletype comes with a 5 level paper tape punch and reader. The punch is mechanically linked to the keyboard, so tape must be punched by hand. The keyboard and punch can be physically removed from the printing unit and used separately. The punch magnet requires a 100 volt at 1 Amp supply. The tape reader on the Model 19 is called a Transmitter-Distributor, or "TD" for short. A punched tape is drawn through one portion at a time, and a mechanical parallel to serial conversion produces the correct teletype (TTY) signal. The tape is read at 60, 65, or 75 words per minute, as determined by a gear set inside. The TD is usually connected in series with the keyboard contacts, so that either can be used to generate TTY signals. This is a satisfactory arrangement for computer operation.

With Model 19 equipment alone, you will not be able to make paper tapes under computer control. For this capability you will need a Model 14 Typing-Reperforator. The Model 14 accepts standard Baudot TTY signals and punches a corresponding paper tape. In addition to

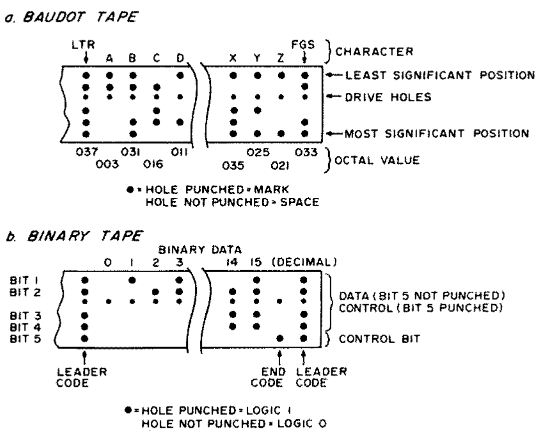

Fig. 1. (a) Conventional Baudot paper tape as used in communications service. (b) Binary paper tape for use in computer applications.

DATA CODE Octal	Baudot Equivalent	CONTROL CODE Octal	Baudot Equivalent
000	<BLANK>	020	<T>
001	<E>	021	<Z>
002	<LF>	022	<L>
003	<A>	023	<W>
004	<SPACE>	024	<H>
005	<S>	025	<Y>
006	<I>	026	<P>
007	<U>	027	<Q>
010	<CR>	030	<O>
011	<D>	031	<B>
012	<R>	032	<G>
013	<J>	033	<FGS>
014	<N>	034	<M>
015	<F>	035	<X>
016	<C>	036	<V>
017	<K>	037	<LTR>

Table 1.

Fig. 2. Reading and punch program: Model 19 and *Model 14.*

TAG	MNEMONIC	ADDRESS	CODE	EXPLANATION
TREAD*	LXI SP	000123	061	Load the stack pointer
		000124	377	SP (LOW)
		000125	003	SP (HIGH)
	LXI H	000126	041	Load HL with memory load address
		000127	xxx	Low part of address
		000130	xxx	High part of address
LOOP2	LXI B	000131	001	Preset B to 2 and C to 0
		000132	000	
		000133	002	
LOOP1	PSH B	000134	305	Save B and C
	CALL	000135	315	CALL INPUT ROUTINE
		000136	000	INPUT (LOW)
		000137	000	INPUT (HIGH)
	POP B	000140	301	Restore B and C
	CPI	000141	376	Check for end of tape
		000142	020	<T>
SELF	JZ	000143	312	Form tight loop for end
		000144	143	SELF (LOW)
		000145	000	SELF (HIGH)
	JNC	000146	322	Ignore other control codes
		000147	134	LOOP1 (LOW)
		000150	000	LOOP1 (HIGH)
	ADR C	000151	201	First Pass: get least 4 bits
	RLC	000152	007	Second Pass: get highest 4 bits
	RLC	000153	007	
	RLC	000154	007	
	RLC	000155	007	
	MOV C, A	000156	117	
	DCR B	000157	005	Check for second pass
	JNZ	000160	302	Jump back for second pass
		000161	134	LOOP1 (LOW)
		000162	000	LOOP1 (HIGH)
	MOV M,A	000163	167	Store byte in memory
	INX H	000164	043	Increment to next memory location
	JMP	000165	303	Jump back for new byte
		000166	131	LOOP2 (LOW)
		000167	000	LOOP2 (HIGH)
TPUNCH**	LXI SP	000170	061	Load the stack pointer
		000171	377	SP (LOW)
		000172	003	SP (HIGH)
	MVI B	000173	006	Load B with leader count
		000174	036	30 decimal
LOOP1	MVI A	000175	076	Load A with <LTR>
		000176	037	<LTR>
LOOP1	CALL	000177	315	CALL TAPEOUT ROUTINE
		000200	273	TAPEOUT (LOW)
		000201	000	TAPEOUT (HIGH)
	DCR B	000202	005	Decrement Leader count
	JNZ	000203	302	Jump back for more Leader
		000204	175	LOOP1 (LOW)
		000205	000	LOOP1 (HIGH)
	LXI H	000206	041	LOAD Starting Address in HL
		000207	xxx	Low part of Address
		000210	xxx	High part of Address
	LXI D	000211	021	LOAD Ending Address in DE

punching, it prints the incoming characters in "ticker tape" fashion. You may wonder how it prints on a tape full of holes. Nothing extraordinary here: The paper tape is chadless (that is, the holes are not punched all the way through). By the way, Model 14s come in a less expensive non-typing version, also. If you already have printer capability, this would be a good choice. Model 14s of both types are readily available on the surplus market.

The Model 14 can easily be connected into the computer I/O system. Since it accepts standard TTY signals, it may be connected in series with the selector magnets of the Model 19 printer.

Paper tapes can be punched with two basic formats: Baudot and binary. Baudot tapes record the 5 level Baudot code in five hole positions across the width of the tape. Actually, there is a sixth smaller hole (called the "sprocket" hole), but it is only used for drive purposes. With the Baudot system, a "hole" is regarded as a "mark" and a "no hole" as a "space." The orientation of the code is shown in Fig. 1. Baudot format is that used for communication purposes.

Unlike Baudot, the binary format is not in common use. In such tapes, the five hole positions are used to record 5 data bits. A "hole" represents a logic 1 and a "no hole," a logic 0. The hole position corresponding to the least significant bit is indicated in Fig. 1.

In a computer environment, Baudot paper tapes are useful for recording programs written in a high level language such as BASIC. Binary tapes, on the other hand, find greatest utility in preserving machine language programs. This is accomplished by simply punching in tape an image of the memory area containing the program. The program can later be re-entered into the same area of memory by reading the paper tape with the proper software. The discussions which follow deal primarily with punching and reading binary tapes under computer control.

The Altair 8800 and similar minicomputers have a basic word length of eight bits. Since a paper tape can record only 5 bits at a time, two read cycles are required to input the full data word. In this case, one bit of the five can be set aside for control purposes, still leaving the required eight bits with two read cycles. Bit 5 is used for the control function in our system. When bit 5 is not punched, the remaining four hole positions are considered binary data representing half of an eight bit data word. The next character in the tape without a control punch is regarded as the second half of the data word. When bit 5 is punched, the remaining four bits represent a control code. Fifteen possible codes can be used to control various aspects of the reading program. In our system, one such code is used as the leader at the beginning of the tape and another serves to indicate the end of the tape.

Label	Instruction	Address	Code	Comment
		000212	yyy	Low part of Address
		000213	yyy	High part of Address
	MOV A, H	000214	174	Check for end of Load
	CMP D	000215	272	Compare High Address
	JNZ	000216	302	If not same, Jump to CONT
		000217	226	CONT (LOW)
		000220	000	CONT (HIGH)
	MOV A, L	000221	175	
	CMP E	000222	273	Compare Low Address
	JZ	000223	312	If same, Jump to END
		000224	246	END (LOW)
		000225	000	END (HIGH)
CONT	MOV A, M	000226	176	Get memory byte into A
	CALL	000227	315	CALL TAPEOUT ROUTINE [Special]
		000230	271	TAPEOUT [Special] (LOW)
		000231	000	TAPEOUT [Special] (HIGH)
	MOV A, M	000232	176	Get memory byte again into A
	RLC	000233	007	Reposition upper four bits
	RLC	000234	007	
	RLC	000235	007	
	RLC	000236	007	
	CALL	000237	315	CALL TAPEOUT ROUTINE [Special]
		000240	271	TAPEOUT [Special] (LOW)
		000241	000	TAPEOUT [Special] (HIGH)
	INX H	000242	043	Increment to next memory byte
	JMP	000243	303	Jump back to AGAIN
		000244	211	AGAIN (LOW)
		000245	000	AGAIN (HIGH)
END	MVI A	000246	076	Load A with stop code <T>
		000247	020	
	CALL	000250	315	CALL TAPEOUT ROUTINE
		000251	273	
		000252	000	
	MVI B	000253	006	Load B with Leader count
		000254	120	
LOOP2	MVI A	000255	076	Load A with <LTR> for Leader
		000256	037	<LTR>
	CALL	000257	315	CALL TAPEOUT ROUTINE
		000260	273	TAPEOUT (LOW)
		000261	000	TAPEOUT (HIGH)
	DCR B	000262	005	Decrement Leader count
	JNZ	000263	302	If not finished, Jump back to LOOP2
		000264	255	LOOP2 (LOW)
		000265	000	LOOP2 (HIGH)
SELF	JMP	000266	303	Jump to SELF to end
		000267	266	SELF (LOW)
		000270	000	SELF (HIGH)
TAPEOUT [Special]	ANI	000271	346	Mask off upper four bits
		000272	017	
TAPEOUT	PSH B	000273	305	Save B
	PSH A	000274	365	Save A
	CALL	000275	315	CALL OUTPUT ROUTINE
		000276	042	OUTPUT (LOW)
		000277	000	OUTPUT (HIGH)
	POP A	000300	361	Restore A
	POP B	000301	301	Restore B
	RET	000302	311	Return to calling program

* TAPE READ PROGRAM
** TAPE PUNCH PROGRAM

Other uses can be made of the control code as well. Suppose you wish to send the computer a 16 bit memory address. You could prefix the four data characters with a special control code that would cause the reading program to branch to an appropriate subroutine. Table 1 gives the data and control codes both in octal and their Baudot equivalent.

As further illustration, consider the implementation of paper tape on our Altair 8800 system. A Model 19 TD is series connected with the keyboard and a Model 14 is series connected with the selector magnets of the printer. We chose two control codes: 037 octal for the leader and 020 octal for the end of the tape. As previously indicated, two character positions are required to store the contents of one memory location. The first contains the least significant four bits while the second contains the most significant four bits. If the leader is encountered within data, it is ignored. This makes it possible to correct a bad punch by simply overpunching with all holes.

The programs we use to punch and read binary paper tapes are given in Fig. 2. The punch program requires the beginning and ending addresses of the memory area that is to be stored on tape. The read program needs only the beginning address, since the end is signalled by an 020 punch.

The punch program is used in the following manner: The beginning and ending addresses to be dumped to tape are placed at 000207 and 000212, respectively; location 000170 is examined; and the RUN switch is toggled. The program generates a number of 037s for the leader. The contents of consecutive memory locations are then punched. At the end of the tape, an 020 octal is punched, followed by an additional leader. Final termination of the program occurs in a tight loop (i.e., an unconditional jump to itself). At this point, the STOP switch may be toggled.

The tape reader program is used in the following way: The address where the tape is to begin storing data is loaded at 000127; location 000123

a.

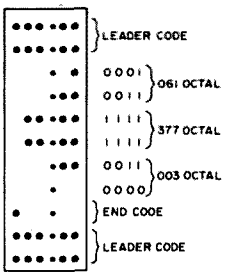

b. EAKKABT

c.

ADDRESS	CODE
000123	061
000124	377
000125	003

Fig. 4. (a) Binary paper tape made by punch program. (b) Printout of modified version of punch program. (c) Memory area used for sample run.

is examined; and the RUN switch is toggled. After execution has begun, the TD is started with the tape in the beginning leader. When the program is finished, the front panel light pattern will change as a tight loop is entered. STOP may then be toggled. The program or data should be correctly stored in memory.

In the event you have a Model 19 punch and TD but not a reperforator, you can still make programs by hand. Fig. 4 is a software modification that outputs Baudot characters to the printer as they should be punched by hand. The program supplies automatic carriage returns and line feeds. A "Z" is printed at the end of each line so that SPACEs may be detected. You will note in Table 1 that data codes include CR, BLANK, and LF (line feed). These would either confuse the printout or not be printed, so the modification software makes the following substitutions:

B is printed for BLANK
L is printed for LF
X is printed for CR

Use the procedure outlined above for punching tape with the modification program loaded at 000271. The characters to be punched will be output to the printer in order. Then use the printout to hand punch the paper tape. A button on top of the punching unit can be used with the LTR key to punch all holes for error correction. When making the tape, be sure to use the LTR key to make the leader. This manual way of making a paper tape is quite tedious, but it will allow you to become familiar with the binary tape system. Fig. 4 shows a paper tape punched by the Model 14 under computer control. Also shown is the printed output of the modified punch program corresponding to the same memory data. ■

TAG	MNEMONIC	ADDRESS	CODE	EXPLANATION
TAPEOUT [Special]	ANI	000271	346	Mask off upper four bits
		000272	017	
TAPEOUT	CPI	000273	376	Check for <BLANK>
		000274	000	<BLANK>
	JZ	000275	312	If so, Jump to PRNTB
		000276	313	PRNTB (LOW)
		000277	000	PRNTB (HIGH)
	CPI	000300	376	Check for <LF>
		000301	002	<LF>
	JZ	000302	312	If so, Jump to PRNTL
		000303	316	PRNTL (LOW)
		000304	000	PRNTL (HIGH)
	CPI	000305	376	Check for <CR>
		000306	010	<CR>
	JZ	000307	312	If so, Jump to PRNTX
		000310	321	PRNTX (LOW)
		000311	000	PRNTX (HIGH)
	LXI D	000312	021	Dummy: Skip instruction
PRNTB	MVI A	000313	076	Place <B> in A
		000314	031	<B>
	LXI D	000315	021	Dummy: Skip instruction
PRNTL	MVI A	000316	076	Place <L> in A
		000317	022	<L>
	LXI D	000320	021	Dummy: Skip instruction
PRNTX	MVI A	000321	076	Place <X> in A
		000322	035	<X>
	PSH B	000323	305	Save BC
	CALL	000324	315	CALL OUTPUT ROUTINE
		000325	042	OUTPUT (LOW)
		000326	000	OUTPUT (HIGH)
	POP B	000327	301	Restore BC
	LDA	000330	072	Place COUNT in A
		000331	364	COUNT (LOW)
		000332	000	COUNT (HIGH)
	INR A	000333	074	Increment COUNT by one
	STA	000334	062	Store in COUNT
		000335	364	COUNT (LOW)
		000336	000	COUNT (HIGH)
	ANI	000337	346	Check for end of line
		000340	077	
	RNZ	000341	300	Return if not
	MVI A	000342	076	Place <Z> in A
		000343	021	<Z>
	PSH B	000344	305	Save BC
	CALL	000345	315	CALL OUTPUT ROUTINE
		000346	042	OUTPUT (LOW)
		000347	000	OUTPUT (HIGH)
	MVI A	000350	076	Place <CR> in A
		000351	010	<CR>
	CALL	000352	315	CALL OUTPUT ROUTINE
		000353	042	OUTPUT (LOW)
		000354	000	OUTPUT (HIGH)
	MVI A	000355	076	Place <LF> in A
		000356	002	<LF>
	CALL	000357	315	CALL OUTPUT ROUTINE
		000360	042	OUTPUT (LOW)
		000361	000	OUTPUT (HIGH)
	POP B	000362	301	Restore BC
		000363	311	Return to Calling program

Fig. 3. Modification for Model 19 system only.

B. T. Ring K3VNR
6619 Powhatan St.
Riverdale MD 20840

Gain for Your HT

--a half wave whip ?

After buying a two meter hand-held transceiver which came supplied with only a helically wound flexible antenna, I decided to try a full length ¼ wave antenna to see if it had any advantage compared to the "rubber ducky." A temporary ¼ wave antenna was quickly made using a 19 inch piece of wire attached to an antenna connector. Although the "rubber ducky" had performed very well, and had the advantage of being compact, the longer antenna seemed to have the advantage of greater capture area and additional height. The improvement on both receiving and transmitting was indeed noticeable.

Since better communications is the name of the game, this little experiment led me to think that if a full length ¼ wave antenna showed some improvement, then perhaps an extended length antenna would provide additional gain. Catalogs listed a wide selection of telescoping antennas for use in services outside the two meter band which could easily be modified. These come in assorted lengths and diameters, but the extremely long ones were ruled out as being unsuitable because they were too unwieldy for a hand-held set. Besides, there would be some difficulty in obtaining a good impedance match to the set.

Three of the shortest ones were selected as being best suited for modification. These had the dimensions shown in Table 1.

With the proper antenna connector (in my case an F-59), and a small loading coil to present a reasonably good match to the output of the transceiver, it is quite simple to modify any one of these antennas for two meter use. In each case a 2-1/2 inch length of 1/2 inch OD, 3/8 inch ID polystyrene tubing is used at the antenna base to enclose the coil and to insulate the antenna from the grounded shell of the connector. All coils are wound with number 20 AWG wire on a piece of plastic tubing 1-1/4" long by 5/16 inches in diameter. If soft plastic tubing is used for the coil form, the wire will hold tight and it will be easy to slip the polystyrene cover over it. For antenna A, wind 13 turns to cover the length of the form; for antenna B, wind 17 turns; and for antenna C, wind 19 turns. Spacing along the length of the coil is not critical.

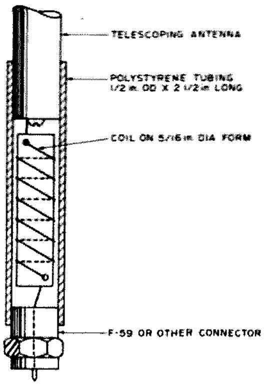

Fig. 1.

One end of the coil is attached to the base of the antenna (all telescoping antennas used came with a small machine screw in the base). The polystyrene cover is then placed over the coil so that about 3/4 inch of the antenna base is inside the cover. The coil cover is held in place with epoxy cement. When the epoxy has cured, attach the other end of the coil to the antenna connector (F-59, BNC, etc.), and cement the connector to the coil cover. Although not essential, a 3 inch length of shrink tubing placed over the coil cover and antenna base will add to the appearance and help to strengthen the polystyrene tubing.

All these extended length antennas have exhibited a remarkable improvement over the "rubber ducky," and a fair amount of gain over the ¼ wave whip. This has been most noticeable when working simplex over a range that could not be reached with the "rubber ducky" or the full length ¼ wave antenna. As I have said before, the name of the game is better communications, so anything that can be done to enhance the low power of most hand-held transceivers is well worth the effort. ■

ANT.	BASE DIAMETER	COLLAPSED LENGTH	EXTENDED LENGTH
A	3/8"	5-7/8"	43"
B	3/8"	4-5/8"	39"
C	5/16"	5-7/8'	36-1/2"

Table 1.

The Super Transmatch

--match almost anything!

73 Magazine *Staff*

The transmatch type of antenna matching network has proved to be one of the most popular designs for transmitter to transmission line coupling or for direct transmitter to antenna coupling. It will match a wide variety of load impedances, including reactive as well as resistive loads. This article describes several modifications to this network which further increase its usefulness, and various construction techniques which bypass the problems which may exist when one tries to economically purchase the components needed for the network.

Why Use a Matching Network?

Many amateurs do not use a matching network between their transmitter and antenna transmission line, particularly when feeding coaxial line from a transmitter with a pi-network output circuit. If the transmission line has an absolutely flat swr of 1:1, a matching network does not add much (e.g., to a 52 Ohm transmission line working from a transmitter output designed for 52 Ohms). The matching network, being a tuned circuit, will only add a bit more of harmonic suppression, much like a simple low pass filter. But, most transmission lines do not have absolutely flat swrs of 1:1 over the entire frequency range of an antenna. This is particularly true for thin wire dipoles or other resonant antennas used on the low frequency bands, or for the various types of trap or loaded antennas when operation over an entire amateur band is considered. It could easily happen, depending on the antenna type, that the swr is 1:1 at a particular operating frequency within a band and rise to 3:1 or 4:1 at the band edges. The result is that the transmitter will not load properly into these high swrs and reduced power output will occur.

The use of a matching network will allow the transmitter to load properly at any frequency within a band, but it will not change the swr on the transmission line. It cannot do the latter since the swr is dependent upon how closely the transmission line impedance matches the impedance at the antenna terminals. The antenna terminal impedance varies, of course, with frequency, while the transmission line impedance remains fixed. So, why bother with a matching network? Simply because the transmitter can be loaded to full power output into the transmission line. A certain percentage of the output power will still be lost due to the swr, but that percentage remains *fixed* due to the swr – and more overall power will be radiated!

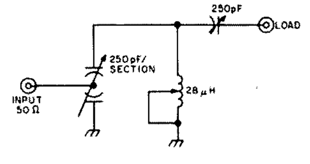

Fig. 1. Basic transmatch for 80-10 meters.

Most amateurs are still using tube-type transmitters, but it is interesting to note that as more solid state transmitters and even solid state linears appear on the market, transmitter to transmission line matching is going to become much more critical. Most solid state power amplifiers, even in the HF ranges, employ broadband interstage and output circuits. They require no tuning, but they will deliver maximum power output only when connected to a resistive load with a very low swr. Even swrs of the range of 1.5:1 or 2:1 will severely reduce power output. Since most HF antenna/transmission line setups do not provide a completely flat swr over the extremes of every band, it means that a matching network will usually be required between the transmitter and transmission line. In a sense, the tuning controls that one now associates with the output stage of a transmitter will be transferred to an external matching network.

The Basic Transmatch

The circuit of the basic transmatch is shown in Fig. 1. With the values shown, it will work from 80-10 meters and match a reasonably wide range of load impedances, be they a transmission line or an antenna directly. If a balanced transmission line or antenna is used, the output of the transmatch can be coupled to the load via a standard 1:1 or 1:4 toroid unbalanced-to-balanced transformer. The rating of the components used depends, of course, upon the power level involved, and can range from receiver-sized components for the QRP level to 3/16" spaced variable capacitors for the 2 kW PEP level. Tuning is accomplished by the use of an swr bridge between the

matching network and the transmitter. On any given operating frequency, the capacitors are tuned to establish a 1 to 1 swr with a minimum amount of inductance being used. Several settings of the capacitors and inductance can achieve a perfect match, but only the one with *minimum* use of inductance will provide a good match plus the most efficient transfer of power through the matching network. The components can be scaled down if operation over less than the 80-10 meter range is desired. For 40-10 meter operation, a 15 microhenry inductor will suffice. For 20-10 meter operation, the inductor can be 10 microhenries and each section of the capacitors need be only a 100 uF.

Circuit Variations

The basic transmatch circuit as described above has been in use by many amateurs for several years. However, its ability to match even a wide range of loads can be further improved and the circuit can be configured to allow the choice of several matching network forms with the same number of components or with the addition of just one more component. The modified transmatch is particularly useful for coupling to extremely short antennas or to highly reactive loads, while still retaining the use of components of reasonable size.

The modified transmatch is shown in Fig. 2. An additional inductor of 10-15 microhenries has been added and access points provided to more circuit components. Flexibility is provided by bringing the access points to binding posts and also by having the SO-239 connectors for the transmitter and transmission line (or antenna) brought to a binding post.

Jumpers between the binding posts, which can be grouped in any convenient configuration, provide interconnection. Conventional transmatch operation is provided by having the input to A, D grounded, and the load to C and L2 set for zero inductance. With very short antennas which the above configuration cannot match properly, the load is connected to B instead of C and L2 increased to provide proper loading. The network can be used as a form of pi-network by leaving D ungrounded, connecting the load to B and grounding C. Interchange of the input and output terminals (A and B) can also be tried. A conventional L matching network can also be formed. If one is working into a lower impedance than the transmitter output, C is grounded, the input goes to B and the load is connected to D. If working into a higher impedance, the input (transmitter output) goes to D and the load to B. A T matching network is formed by having A grounded, the input going to D and the load connected to B. Simple capacitive divider circuits can be formed in several ways (e.g., by grounding A, setting L1 and L2 to minimum, connecting the input to C and the load to D).

Several other circuit configurations can be arranged, and with patience just about any conceivable load can be matched. Obviously with such an array of matching circuit configurations available, it becomes important to avoid confusion. Post H provides a dummy load. The transmitter, if it has output tuning controls, is first connected to the dummy load and loaded properly. The drive can then be reduced to just enough to properly operate the swr meter connected between the transmitter and matching network. Various matching circuit configurations can then be tried, with the goal in mind to find one that provides a 1 to 1 swr and which utilizes a *minimum* amount of inductance in the matching network. This will take some patience at first (or when using a new antenna), but the settings of the components and connection points can be logged to expedite future tuning. When the transmitter drive is increased to normal level, some slight retuning of the settings of the components in the matching network will be required.

Fig. 2. Modified transmatch provides a variety of matching network configurations and greater matching range.

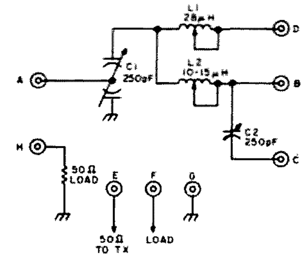

The Components Struggle

For QRP levels and powers up to about 50 Watts, regular BC type variable capacitors are usable. The inexpensive $1.29 types with teflon sheet insulation between the plates work quite well, and can be used to construct a truly compact matching network. Roller inductors are not necessary. B&W coil stock (3002 or similar) tapped every few turns can be used, or a coil can be easily home brewed using any plastic form of ½-¾" diameter and winding it with #16 wire. Handbook formulas can be used to determine the turns and spacing needed for the inductance values given. Another possibility is to wind #18 wire on an Amidon T-106, mix 2, toroid. About 40 turns are required for 28 microhenries and about 30 turns for 15 microhenries. Every few turns should be tapped. The combination of the BC variables and toroid coils makes a good combination for a QRP matching network to be housed in a very small metal or plastic enclosure, not only because of size, but because the toroids are highly self-shielding.

For the 50 to 200 Watt power level, one can, under the circumstance of not having to match extremely reactive loads, still use BC air-insulated variable capacitors and either coil stock, a home brew longitudinally wound coil, or a toroid wound coil. A suitable toroid for the latter would be Amidon T-200, mix 2, and it can be wound with #14 wire with the turns mentioned above. This would probably be the best approach to use if one were confronted with an antenna system which produces a fairly moderate matching problem (swrs in the order of 3 to 1 or 4 to 1), such as a thin wire dipole not loading properly into a transceiver over the entire limits of the 80 or 40 meter band.

However, if one wanted to have a matching network at the 50-200 Watt level which would just about load into anything going, including a 12' whip on 80 meters, a different approach has to be used. The variable capacitors should be rated at least at from 1000-1500 volt spacing. The inductors should be the roller type. Suitable such components, if purchased new, can be quite expensive. A better bet would be to find suitable components from a surplus outlet. Fair Radio Sales, for instance, frequently has available suitable capacitors and surplus roller inductors from the old ARC-5 transmitter series.

The 200 Watt-on-up power level presents a particular problem. It is difficult to believe that at this power level one would need a matching network to load into any sort of random antenna configuration. Again, for a moderate swr environment and the 1 kW power level, probably the components specified for the

Fig. 3. Fixed capacitors can replace costly variables for high power operation. See text for details.

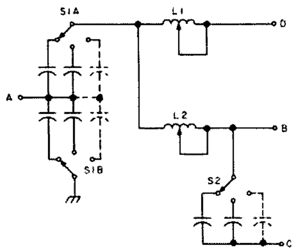

extreme of the foregoing power level will suffice – 1000 to 1500 volt rated variable capacitors and surplus ARC-5 roller inductors. However, if one does wish to build a 2 kW level matching network that will literally load into any sort of odd antenna system, either a brute force approach can be used or a modified one. The brute force approach is rather simple. The variable capacitors should be wide-spaced and rated at 3,000 to 6,000 volts. The variable inductors should be Johnson type 229-203 or similar. The inductors are available from surplus outlets.

The capacitors present a different sort of problem. Although some 6,000 volt wide-spaced capacitors are available (from sources such as Fair Radio Sales or Barry Electronics, NYC), they are expensive ($25 range) and also consume a great deal of space. A modified approach to constructing a matching network for the 200-2000 Watt level can be used to save on capacitor costs. C1 can consist of a modest 100 pF section wide-spaced variable, as can C2. Additional capacitors can then be plugged in or switched in across C1 and C2 in 50 uF steps, so their total capacitance can be brought up to 250 uF. Note that to build up C1 only a single capacitor across it is needed, not a separate capacitor across each section of C1. Another variation of the above theme which has been tried and which does work is to eliminate the variable capacitors altogether. Plug in or switched in capacitors (5,000 volt mica types) are used as shown in Fig. 3. It would be desirable to have as many plug in capacitors as possible to simulate the variables, but one should at least have enough to form 50 uF steps up to 250 uF and one or two below 50 uF. If one knows what antennas the matching network will be used with on the various bands, a small variable can first be used, with low power, in the matching network, to establish the approximate value of the fixed capacitors for full power operation. With fixed capacitors, the variable inductors are used to tune for a match. L2 should always be used in series with C2. Probably a bit more inductance will be used than with having variable tuning capacitors. This will reduce the efficiency of the network a bit (and also, the fixed capacitors have more loss than air-spaced capacitors). With good quality components, however, and heavy strapping to interconnect components, the loss should be hardly discernible.

This article has tried to present some ideas for adding more versatility to an already good matching network. Many construction techniques are possible at the various power levels, and by careful catalog and parts box searching, one should be able to build the network economically. ■

Note: Dennis Hoffman, 1291-A Garden Terrace, Fort Dix NJ 08640, has available Johnson 28 uH kW level roller inductors at $15, and 10 uH inductors for $10 postpaid.

FCC

Before the
FEDERAL COMMUNICATIONS COMMISSION
Washington, D.C. 20554
FCC 76-214
39630

In the Matter of Deregulation of Part 97 of the Commission's Rules to provide for greater flexibility in the administration of examinations in the international Morse code

ORDER
Adopted: March 9, 1976;
Released: March 16, 1976

By the Commission:

1. The Commission intends by this Order to allow greater flexibility in the administration of examinations in the international Morse code in the Amateur Radio Service. We are deleting that part of Section 97.29(c) of the Commission's Rules concerning the standard to be met by an applicant in the reception by ear and transmission of the international Morse code.

2. Section 97.29(c) of the Rules currently provides that in order to pass the examination in reception of the international Morse code, the applicant must copy and send one minute of plain text "at not less than the prescribed speed, free from omission or other error for a continuous period of at least 1 minute during a test period of 5 minutes . . ."

3. We believe Section 97.29(c) to be unduly restrictive. While the Commission is required by Article 41, §3 of the Radio Regulations of the International Telecommunications Union to license as amateurs only those persons proving they are able to send correctly by hand and to receive by ear texts in Morse code signals (this requirement may be waived for stations making exclusive use of frequencies 144 MHz and above), the manner in which such proof may be offered is not specified.

4. There are several alternatives to the current method of proving competency in the reception of the Morse code, and the Commission believes it to be in the public interest for it to have the option of utilizing one or more of these alternate methods. Among the possibilities we are seriously considering is a multiple choice examination covering a five minute transmission of plain text. Such a test would relieve the applicant of the extremely tedious burden of copying one minute of mixed text without error, yet would provide an accurate gauge of his competency in the reception of Morse code message content.

5. The Commission is planning to begin administration of multiple choice "message content" telegraphy examinations on a limited, trial basis in the near future in a few Commission field offices. All applicants appearing at field offices administering this type of examination will be required to undertake it. Such applicants will not be afforded the option of taking the more traditional examination. As a matter of policy during this experimental period, we will certify those applicants taking multiple choice examinations only if they have answered 80 per cent of the questions correctly. Those applicants taking the traditional examination will continue to be required to copy and send one minute of a five minute transmission perfectly in order to pass. Any change in this policy will be announced publicly in advance of the change.

6. Authority for this amendment appears in Section 4(i) and 303 of the Communications Act of 1934, as amended. Because the manner in which examinations in the Amateur Radio Service are conducted is a matter of internal agency procedure, the prior Notice and public procedure provisions of the Administrative Procedure Act, 5 U.S.C. §553(b), are not applicable.

7. Accordingly, IT IS ORDERED, that Part 97 of the Commission's Rules IS AMENDED as set forth in the attached Appendix effective March 24, 1976.

FEDERAL COMMUNICATIONS COMMISSION
Vincent J. Mullins, Secretary

APPENDIX

Part 97 of Chapter 1 of Title 47 of the Code of Federal Regulations is amended as follows:

1. §97.29(c) is amended to read as follows:
§97.29 Manner of conducting examinations.

* * * * *

(c) The code test required of an applicant for an amateur radio operator license, in accordance with the provisions of §§97.21 and 97.23 shall determine the applicant's ability to transmit by hand key (straight key or, if supplied by the applicant, any other type of hand operated key such as a semi-automatic or electronic key) and to receive by ear, in plain language, messages in the international Morse code at not less than the prescribed speed during a five minute test period. Each five characters shall be counted as one word. Each punctuation mark and numeral shall be counted as two characters.

Before the
FEDERAL COMMUNICATIONS COMMISSION
Washington, D.C. 20554
FCC 76-228
39639

In the Matter of Amendments of Parts 2 and 91 of the Commission's Rules and Regulations to permit assignment of frequencies in the 420-450 MHz band for non-Government radiolocation.

Docket No. 20147
Report and Order
Adopted: March 10, 1976
Released: March 16, 1976

By the Commission: Commissioner Washburn absent.

1. On August 23, 1974, the Commission released a Notice of Proposed Rule Making (FCC 74-882) in the above-captioned matter proposing the allocation of frequencies in the 420-450 MHz band for non-Government radiolocation service on a secondary basis to Government and Amateur services presently operating in that band. The Notice was duly published in the Federal Register on August 29, 1974 (39 FR 31533). Comments were due by November 4, 1974, and reply comments, by November 19, 1974.

2. The proposal in the Notice was in response to the rule change as stated above, requested by Navigation Management, Inc. (NMI).[1] This request was prompted by the

Continued on page 164

[1] A company engaged in the development and manufacture of radiolocation equipment in this band.

SOCIAL EVENTS

from page 17

LEVELLAND TX
AUG 1

The 11th Annual Northwest Texas Emergency Net swapfest and picnic will be held in the City Park in Levelland, Texas on Sunday, August 1, 1976. Bring your own picnic basket. Free registration begins at 0900. Lunch at 1230. Swapping all day. Tables are provided. This event is for the entire family and is jointly sponsored by the Hockley County Amateur Radio Club and the Northwest Texas Emergency Net. Mobile talk-in frequency is on two meters only on 146.28-88 Mc., the Levelland Repeater: WR5AFX.

WASHINGTON MO
AUG 1

The Zero-Beaters ARC will hold their annual hamfest on Sunday, August 1, at Washington, Missouri City Park. Free parking, auction, and bingo for the XYLs. No admission fee or fee for parking in the traders row. Many prizes including station accessories, books and a handmade quilt. For info or tickets contact Al Lanwermeyer WNØQBS, or Zero-Beaters ARC, WAØFYA, Box 24, Dutzow, Mo. 63342.

MACK'S INN ID
AUG 6-8

The Wyoming - Idaho - Montana - Utah Ham Club would like to announce that the 44th Annual WIMU Hamfest will be held August 6-8 at Mack's Inn, Idaho just 20 miles west of Yellowstone National Park. There will be a full line of activities including our famous breakfast under the pines. Camping on the grounds is available plus motels, cabins and restaurants. Pre-registration is $6 per person, $1 for children under twelve. For registration or more info contact: WIMU, c/o Larry Jacobs WA7ZBO, 5655 So., 4060 West, Salt Lake City, Utah 84118.

SAUK RAPIDS MN
AUG 8

The St. Cloud Radio Club Annual Hamfest will be held on Sunday, August 8, 1976, from 10 am till closing, at the Sauk Rapids Municipal Park. Free parking and overnight parking, hot dogs and pop available. Swapfest and ham gear sale. Talk-in on 34/94 and 3925. Hope to see you all there. For further info, contact Bill Zins WAØOTO, St. Cloud Radio Club, PO Box 752, St. Cloud MN 56301.

FT. WASHINGTON
STATE PARK PA
AUG 8

The Mt. Airy VHF Radio Club (the Packrats) are holding their annual family picnic in the Flourtown Area of the Fort Washington State Park on Sunday, August 8, 1976 (rain date 15 August). Talk-in via W3CCX/3 on 52.525, 146.52, and 222.98/224.58 MHz.

PETOSKEY MI
AUG 14

Straits Area Radio Club Swap and Shop will be held August 14 from 8 am to 4 pm at Emmet County Fairgrounds on US 31, ½ mile west of southern junction of US 31 and US 131, in Petoskey, Michigan. All amateurs, CBers, SWLs, $1 admission, 50¢ per table, door prizes, lunch counter, free parking. Talk-in on 3.920 MHz, channel 1, 146.52 MHz.

LETTERS

from page 51

For three years, on Good Friday, I made the trip to the FCC office in Detroit. In the first two tests, I did not pass the code. The third time I passed the code, but was so excited about passing the 13 wpm that I messed up the sending.

Coming home a little discouraged, I realized that I had been doing a lot of other things and not really devoting enough time to my studying. I went out and bought an HW-101 because by now I was determined to get my General.

I listened to W1AW almost every night. Nights that I couldn't listen because of other commitments, I listened to code records. On April 20, 1975, I took my General Exam through the Civil Service Commission in Cleveland.

After two minutes of code copy, I could see that I had enough characters. I was so happy to have copied them, I quit copying, thinking I had enough to pass the test requirements. When I received my test results, I was disqualified for not copying for the full five minute period — but was given credit for my theory.

On June 24, I retook my 13 wpm code test and passed. After waiting four months, I called the FCC field office in Detroit and was told a four to six months' wait was not uncommon due to all the CB license applications Gettysburg has had. When six months were up, I called Detroit again. A woman gave me a Washington, D.C. number to call.

Washington told me that they had no record of my application and that it must be lost, and I would have to resubmit a new Form 610. So I got on the phone to Detroit again to get a new Form 610 sent to me. I talked to an examiner this time and he gave me the name of someone in Washington to talk with about getting special authorization to go on the air since I already had my Technician call.

I was told to send a Xerox copy of the filled out 610 which Detroit was sending me and they would see what they could do.

I sent the new application to the FCC in Detroit, and a copy to Washington, on December 23, 1975. Four weeks later, I received a temporary license good for four months; four weeks later, I received my regular General; and four and one half weeks after that, the lost license showed up (March 19, 1976) — a total of 38½ weeks and three licenses.

The second thing to go wrong happened two weeks before my license was due to arrive. I had a fellow "ham" come over to fire up my rig to see if it and my antenna system were working. Well, the rig, which had been aligned by a Heath Service Center a year before, wouldn't load up.

So, after looking at the rig for a week, I took it back to the Service Center. Seven weeks later (March 5, 1976), I got my rig back, finding out that it had a shorted capacitor in the VFO which burnt out a resistor. Total cost was $45.00 service and $.30 parts.

The third thing to go wrong, and I hope the last, happened on March 5. I had 30 feet of tower blow over, which I had only installed three days earlier (I was waiting for the weekend in order to install 20 more feet of tower with guides). One good thing was that I didn't have my 20 meter beam on it yet.

I realized that when I poured the footer, I threw pieces of broken sidewalk into the hole for fill. I had a hinge plate mounted with 9" bolts. There was also a large piece of cement just below the mounting bolts. At this point, the concrete broke and the tower came down.

That following weekend I dug a new hole and poured a new footer. This time I did not use any large pieces of old concrete and had three foot rods welded to my bolts, with cross braces welded to them.

The whole point of my letter is to encourage others not to give up, but "just hang in there." I feel that in conquering some of these "road blocks" encountered while participating in the hobby of ham radio we can learn new things, become a better person, and acquire new friendships. Also, when it is all over, we can look back and laugh at our mistakes and learn from them.

Richard L. Harben WB8FFZ
Sheffield Lake OH

FIREBIRD A. R. C.

I am interested in contacting amateurs who are currently working for, or have retired from, the General Motors Corporation. My search is for hams who do not know of the Firebird Amateur Radio Club.

My list of Firebird units (different locations) stands at 190 and I am striving for the 200 mark.

The Firebird Club presents 100 free 5 color QSL cards to all new members.

Ray Cunningham WA8OKE
9102 Nathaline
Detroit MI 48239

CONTESTS

from page 10

be made within two years after the contest, but not before the results are published. The fee for each certificate is DM 5 or 8 IRCs. EURO III is given for written confirmations (QSLs) from at least 20 different countries and a minimum of 100 prefix points. Countries are determined by the European countries list shown below, and each country counts only once regardless of band. Each official European prefix, however, counts one prefix point per band. EURD II is given for 150 prefix points in 30 countries and EURD I is given for 200 prefix points in 40 countries.

EUROPEAN COUNTRY LIST:

C31 - CT1 - CT2 - DL - DM - EA - EA6 - EI - F - FC - G - GC Guer - GC Jer - GD - GI - GM Shetland - GW - HA - HB9 - HB0 - HV - I - IS - IT - JW - JW Baer - JX - LA - LX - LZ - M1 - OE - OH - OH0 - OJ0 - OK - ON - OY - OZ - PA - SM - SP - SV - SV Crete - SV Rhodos - SY Athos - TA1 - TF - UA1, 3,4,5,6 - UA2 - UA Franz Josef Land - UB5 - UC2 - U05 - UN1 - UP2 - UQ2 - UR2 - YO - YU - ZA - ZB2 - 3A - 4U - 9H1.

Send application, QSLs, and fee to: DAFG, Award Manager, PO Box 1663, D — 4140 Rheinhausen, West Germany.

WORKED ALL SVARA AWARD

The Saginaw Valley Amateur Radio Association now offers the Worked All SVARA Award, which can be had by sending five QSL cards from members of SVARA and one dollar to cover the cost of printing and mailing to the Secretary of SVARA, WB8KFU, 2115 West Sloan, Burt MI 48417. The QSL cards will be returned with the certificate. Contacts must be made during 1976.

DRD AWARD

This award is offered by the DAFG to promote amateur RTTY activities and is issued each year (Jan 1st to Dec 31st). The DRD requires a total of 25 points for stations outside Germany, where each QSO with a German RTTY station counts 1 point (or 2 points on VHF/UHF). Each German station may be worked once on shortwave and once on VHF/UHF, and only 25 points per band may be claimed. No QSLs are needed. Send a summary of your log, confirmed by two radio amateurs or your radio club. The fee is DM 5 or 8 IRCs. Send application, QSLs, and fee to: DAFG e.V., Award Manager, PO Box 1663, D — 4140 Rheinhausen, West Germany.

RESULTS

RESULTS OF 1975 MARTS SEANET WORLDWIDE DX CONTEST

SEANET Area Top Scorers:

Single band — Phone	9V0SN	188,421 points
Multiband — Phone	9V0SH	530,784
Single band — CW	VS5PM	14,418
Multiband — CW	9M2LN	153,537

Outside SEANET Area Top Scorers:

Single Band — Phone	LU2AFH	4,293 points
Multiband — Phone	IT9FKS	5,400
Single Band — CW	OH1QB	609
Multiband — CW	YZ4HA	1,386

Sam Kelly W6JTT
12811 Owen Street
Garden Grove CA 92645

Simple VHF Monitor

--converter for a transistor radio

This little converter, when used with an inexpensive portable transistor radio, will monitor a wide range of VHF frequencies. It can be built in a few minutes using junk box parts. Even if the parts have to be bought, they will cost only a few dollars. It doesn't provide communications receiver quality, but it is useful when tuning up a transmitter or for general coverage reception. It mounts next to the ferrite loop of the transistor radio to make up a complete receiving system. Reception over a wide range of frequencies is possible by altering the tuning coils. The components specified here cover the range of about 120 to 150 MHz. This range provides a lot of fun in listening to aircraft radio communications, the 2 meter ham band, and other services.

The circuit, Fig. 1, is that of a regenerative converter. The incoming signal, tuned by the tank coil L-1 and capacitor C-2, is mixed in the transistor with an oscillator frequency controlled by L-3 and C-7. The difference frequency is adjusted to fall in the standard broadcast band.

The converter is built on a small piece of perforated board. Parts layout is not critical. However, all leads should be kept as short as possible and the oscillator and input tank coils should be mounted at right angles to each other. The completed assembly is mounted in a small open backed metal box to minimize the effects of hand capacitance. Tuning is accomplished by drilling a ¼" hole through the box in line with the adjustment screw on the oscillator tuning capacitor. A small piece of 1/8" wooden doweling is then cemented to the tuning screw with a drop of Eastman 910 (or equivalent) cement.

A small dual gang variable capacitor could be used but would be more expensive. Tuning of the input tank circuit is very broad and does not require adjustment after it has been initially set. A hole could be drilled in line with C-2 to permit peaking, using an insulated screwdriver, after the unit is packaged. A BNC connector or RCA type female phonograph connector is mounted at the top of the box for connecting the antenna. Good reception on local signals was obtained with a piece of #14 wire 19" long for the antenna.

Coils L-2 and L-4 can be 100 microhenry VHF rf chokes, or if you don't have any in your junk box you can use TV peaking coils or simply scramble wind about 20" of fine wire on a 100k ¼ Watt resistor.

The completed converter is fastened to the back of the radio using vinyl tape or rubber bands. Placement is not critical, but try to locate coil L-3 as close to the ferrite loop as possible. I have had satisfactory results with the converter lying on the workbench a couple of inches from the radio! Connect the battery and turn the converter on. Tune the radio until a loud hissing sound is heard. Typically this will occur at at least two spots on the dial. Tune the receiver to the loudest hiss. Turn the converter power off to be sure that you are tuned to the output of the converter. Next tune in a signal with C-7 and peak C-2 for maximum signal strength.

Tuning is best done with C-7, although a certain amount of peaking can be done with the transistor radio tuning. As with most regenerative type devices, a high level signal can readily capture the tuning. Although the converter has limitations, I have had excellent reception from aircraft over 200 miles away, and from ground stations up to 30 miles away. ■

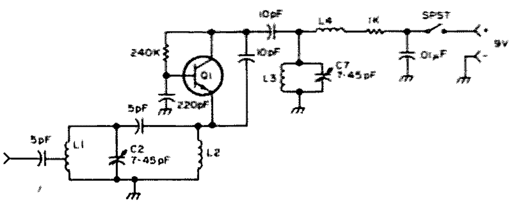

Fig. 1. Schematic of low cost VHF monitor. L-1: 4 turns #22 wire on ¼" diameter form. Center tapped. L-2, L-4: See text. L-3: 4 turns #22 wire on ¼" diameter form. Q-1: NPN VHF transistor 2N2222 or equivalent.

FCC

from page 155

termination of operation of SHORAN radiolocation systems in the 220-310 MHz range as of October 1, 1971. NMI indicated that it had developed a "second generation" SHORAN-type radiolocation system called HIRAN, which would operate in the 420-450 MHz band allocated in Region 2 to the radiolocation service preimarily and to the amateur service on a secondary basis. This band was selected by NMI because of its suitability for highly accurate medium to long range over-the-horizon radiolocation service required for mineral exploration along the outer continental shelf. NMI contended that higher radiolocation bands, such as 2900-3700 MHz, do not lend themselves to this kind of use because of their limited propagation, and sophisticated radio equipment used in SHORAN-type radiolocation systems has not been developed for operation at these higher frequencies.

3. Prior to issuance of the Commission's Notice, the US Government users who have primary status in the proposed band conducted interference tests using the HIRAN-type equipment. Based on those tests, the IRAC (Interdepartment Radio Advisory Committee) agreed to permit the proposed operation on a secondary basis to Government radiolocation services.

4. In addition, because of an urgent need for radiolocation support of oil exploration operations in Alaska, a waiver was issued on May 23, 1973, to permit non-Government radiolocation in the 420-450 MHz band in that area pending completion of the instant rulemaking proceeding. This waiver was granted on the condition that no harmful interference be caused to the Amateur Radio service, which operates in this band on a secondary basis to Government radiolocation.

5. The proposal embodied in the Commission's Notice contained restrictions similar to those stated in the waiver. The Notice stated that non-Government radiolocation systems would be permitted to operate in the contiguous 48 states and Alaska on a non-interference basis to both Government and amateur stations. Although the Commission felt there was little probability of interference from the proposed non-Government radiolocation systems, the burden would be with the operators of those systems to take corrective measures if interference did occur. Also, as proposed in the Notice, this allocation would be temporary, with a cut-off date of January 1, 1978.

6. Comments were submitted by Offshore Navigation, Inc. (ONI), American Radio Relay League (ARRL), and various amateur radio operators. Reply comments were submitted by ONI. Late comments were also submitted by Texas Instruments, Inc. (TI).

7. ONI is interested in this proceeding as a corporation rendering commercial radiodetermination services on a worldwide basis and as an entity performing research and development on the refinement of the SHORAN/HIRAN type radiolocation system. In its comments, ONI noted that the terms "SHORAN" and "HIRAN" were both used in the Notice and suggested, since HIRAN is simply a term used to identify second-generation SHORAN, that "pulse-ranging" or "SHORAN-type radiolocation systems" be the terms used in the regulations. It also commented that its experience with its HIRAN system operating on waiver in Alaska had been "most favorable." It reiterated the urgent need for radiolocation service of this type because of worldwide fuel shortages and the concomitant need for oil exploration and drilling farther and farther offshore. This need is further heightened, according to ONI, because no other radiolocation system provides the range and accuracy required for long range offshore exploration.

8. ONI's main objection concerned the proposed cut-off date for radiolocation operation in the band. According to ONI, the 2900-3700 MHz band is not a practical substitute for the 420-450 MHz band because of propagation difficulties and the consequent lack of suitable equipment. Furthermore, ONI could see no practical need for a cut-off date, as the probability of harmful interference from the radiolocation service would be very slight, and responsibility for correcting interference, should any occur, would rest with the radiolocation licensee.

9. ARRL, reflecting the views of the amateurs who filed comments in this proceeding, opposed the Commission's proposals. It pointed out the increased amateur occupancy in the 420-450 MHz band, as well as special amateur operations (for example the Oscar 7 satellite) in certain segments of the band which it felt should be protected. It stated that existing Government radiolocation operations in the band had interfered with amateurs, and that there would be a problem identifying the source of interference from non-Government radiolocation systems because of their use of pulse-type emissions. It was skeptical about the likelihood of adherence to any cut-off date once the proposed service is established in the band.

10. Various radio amateurs submitted comments, all of which objected to the proposed allocation, mainly because of

alleged problems of potential interference and the difficulty in identifying radiolocation operations which might be interfering in a particular area. The primary concern was interference to amateur repeater operations which they felt might have to be shut down *because of interference from the radiolocation* service. Several amateur operators offered suggestions to help alleviate the identification problem. One suggested that local HIRAN operations be posted at FCC field offices. Another recommended that radiolocation users be required to co-ordinate their operations with amateur frequency co-ordinators for the areas in which the radiolocation system will be used. An Amateur Radio Club in California offered to provide the facilities so an interference study could be conducted over the California coast.

11. In its reply comments, ONI stated that except for a general and unquantified reference by the ARRL, not one Amateur complained of interference from Government radiolocation stations. Furthermore, ONI cited several reasons why interference would be highly unlikely. It stated that there are thousands of miles of coastline and very limited Amateur usage of this band. Also it said that it would co-ordinate its transmitter site locations with appropriate Amateur organizations to avoid use of the channel employed by the Oscar 7 satellite. It indicated that it is also working toward minimizing the SHORAN power and bandwidth requirement.

12. TI's late comments supported the concept embodied in the rulemaking and the proposed rule change. TI explained that it too has *developed a radiolocation system* which would utilize the 420-450 MHz band in connection with geophysical exploration services offered to the oil companies. It echoed ONI's position that developing domestic petroleum resources has become an increasingly urgent matter and that the offshore area of the US offers a great untapped source. As a part of its development of this service, TI indicated that it has operated experimental radiolocation systems in several areas of the U.S. within the subject band. Its system in the Gulf Coast area of Texas has been in operation for 2 years at 430 MHz, and a more recent operation began this July in the Northeast area of the U.S., centered at 429 MHz. No harmful interference has been reported as a result of these operations.

13. The Commission is well aware of the urgency associated with this country's energy development program, in which offshore exploration plays a major role. The radiolocation services proposed by ONI and TI would appear to provide a very useful, if not essential, tool in that exploration effort. No satisfactory alternatives to either the service or frequency band proposed appear feasible within the immediately foreseeable future. Therefore, we are persuaded that some accommodation should be made for non-Government radiolocation service in the 420-450 MHz band, notwithstanding the objections raised by the radio amateurs.

14. Moreover, we believe that much of the concern expressed by the amateurs is largely without basis. There was nothing substantive in any of the comments to challenge our view, as stated in the Notice, that there would be little potential interference to amateurs from the proposed service. We still believe this to be true and further believe that making the non-Government radiolocation service secondary with regard to amateurs will provide sufficient administrative control over any interference which might occur. Any additional limitations or coordination requirements would be redundant, needlessly burdening the radiolocation service and reducing its effectiveness while providing little or no additional protection to the amateurs.

15. In addressing the comments made by the amateurs voicing their concern over potential interference from HIRAN and the consequent problem of identification, we feel that no such problem should arise because of the licensing procedure as well as the nature of the system itself. The basic HIRAN system consists of fixed units with some mobile units. The authorization is issued by the Commission for the fixed unit *at a specific location, and any time the unit* moves, a modified authorization must be issued. Therefore, complete data on each system will be on file at the Commission and will be accessible to any interested parties. Further, there will in all probability be a small number of licensees using these frequencies. The operation itself is of a highly controlled nature and handled by experienced operators.

16. Consequently, we are adopting the proposed allocation and rules essentially as set forth in the Notice. There are only two changes: (1) the term "pulse-ranging" is *being substituted for the term "HIRAN" as* suggested by ONI; and (2) the proposed "cutoff" date of January 1, 1978, for non-Government radiolocation systems in the band is being replaced by the date of January 1, 1981. We make this latter change because based on the information available tous we believe use of the 2900-3700 MHz band poses difficult technical problems for this type of application and would not offer a practical alternative to the 420-450 MHz band for at least the next five years. Also, although various satellite radiolocation systems are being developed which might *eventually be used for offshore exploration* purposes, we do not realistically foresee them becoming available for regular non-Government use in offshore areas prior to 1981.

17. Accordingly, pursuant to authority contained in Sections 4(i) and 303(r) of the Communications Act of 1934, as amended,

IT IS ORDERED that effective April 22, 1976, Parts 2 and 91 of the Commission's Rules are AMENDED as shown in the attached Appendix and that this proceeding is hereby terminated.

FEDERAL COMMUNICATIONS COMMISSION
Vincent J. Mullins, Secretary

NOTE: Rules changes herein will be covered by T.S. II(72)-9 and T.S. V(74)-3.

APPENDIX

1. In §2.106, columns 5 through 11 for the band 420-450 MHz are amended, footnote US35 is modified, and footnote US217 is added to read as follows:

§2.106 Table of Frequency Allocations

Band (MHz)

5

420-450

Allocation

6

G, NG.
(US 217)
(US 87)
(US 7)
(320A)
(US 35)

Band (MHz)

7

420-450

Services

8

Amateur
Amateur-Satellite

Class of Station

9

Amateur.
Earth.
Space.

Frequency
(MHz)

10

Nature OF SERVICES
of stations

11

AMATEUR.
AMATEUR-
SATELLITE.

US35: Except as provided for by footnotes 320A, US87, and US217, the only non-Government services permitted in the band 420-450 MHz are the amateur service and the amateur satellite service. The amateur services shall not cause harmful interference to the Government radiolocation service.

• • • • •

US217: Pulse-ranging radiolocation systems may be authorized for Government and non-Government use in the 420-450 MHz band along the shorelines of Alaska and the contiguous 48 states. Such authorizations will be granted on a case-by-case basis, and all stations operating in accordance with those authorizations will be secondary to stations operating in accordance with the allocation table. Stations authorized pursuant to this footnote must cease operation on or before January 1, 1981. All power and antenna height specifications shall be made on a case-by-case basis.

• • • • •

2. In §91.604(a) the frequency table is amended and paragraph (b)(20) is added to read as follows:

§91.604 Frequencies available

(a)

Frequency or band

• • •

310
420-450
2450-2500

• • •

Class of Station(s)

• • •

do
do
do

• • •

Limitation(s)

• • •

2
19
3

• • •

(b)(20) Non-Government pulse-ranging radiolocation stations in this band are secondary to the Government Radiolocation Service, the Amateur Radio Service and the Amateur Satellite Service. Stations authorized pursuant to this footnote must cease operation on or before January 1, 1981. All power and antenna height specifications shall be made on a case-by-case basis.

73 READER SERVICE

Circle appropriate Reader Service # for desired company brochures, data sheets or catalogs and mail in to 73. Include your zip code, please. Send money directly to advertisers. *LIMIT: 25 requests.*

ADVERTISER INDEX

☐ *NEWSSTAND* ☐ *SUBSCRIPTION*

READER SERVICE

73 Inc., Peterborough NH 03458
JULY 1976

Please print or type.

Name ______________________ Call ________

Address ______________________

City ______________________

State ______________________ Zip ________

Coupon expires in 60 days . . .

propagation

by
J. H. Nelson

EASTERN UNITED STATES TO:

GMT:	00	02	04	06	08	10	12	14	16	18	20	22
ALASKA	7A	14	7	7	7	7	7	7	7	7	7	7A
ARGENTINA	14	14	7A	7	7	7	7A	14	14	14	14	14
AUSTRALIA	14	14	14B	7B	7	7	7	7	7	7B	14	14
CANAL ZONE	14	14	7	7	7	7	7	14	14	14	14	14
ENGLAND	7A	7	7	7	7	7	7A	14	14	14	14	14
HAWAII	14	14	7A	7	7	7	7	7	14B	14	14	14
INDIA	7	7	7B	7B	7B	7B	7	7	14B	14	14	14
JAPAN	14	14	7	7	7	7	7	7	7	7	7	14
MEXICO	14	14	7	7	7	7	7	7	7A	14	14	14
PHILIPPINES	14	14	7	7B	7B	7B	7B	7	7	7	7B	7A
PUERTO RICO	14	7	7	7	7A	7	7	7	14	14	14	14
SOUTH AFRICA	7B	7	7A	7	7	14	14	14	14	14	7	7B
U.S.S.R.	7	7	7	7	7	7	14	14	14	14	14	14
WEST COAST	14	14	7	7	7	7	7	14	14	14	14	14

CENTRAL UNITED STATES TO:

GMT:	00	02	04	06	08	10	12	14	16	18	20	22
ALASKA	7A	14	7A	7	7	7	7	7	7	7	7	7A
ARGENTINA	14	14	7A	7	7	7	7	14	14	14	14	14
AUSTRALIA	14	14	14	14B	7	7	7	7	7	7B	14	14
CANAL ZONE	14	14	7A	7	7	7	7	14	14	14	14	14
ENGLAND	7	7	7	7	7	7	7	7	7A	14	14	14
HAWAII	14	14	14	7	7	7	7	7	14B	14	14	14
INDIA	14	7	7B	7B	7B	7B	7	7	7	7A	7A	7A
JAPAN	14	14	14	7	7	7	7	7	7	7	7	14
MEXICO	14	7A	7	7	7	7A	7	7	7	7	14	14
PHILIPPINES	14	14	14	7B	7B	7B	7	7	7	7	7B	7A
PUERTO RICO	14	14	7	7	7	7	7	14	14	14	14	14
SOUTH AFRICA	7	7	7A	7	7B	7B	14	14	14	14	7	7B
U.S.S.R.	7	7	7	7	7	7	7	7	7	7A	14	14

WESTERN UNITED STATES TO:

GMT:	00	02	04	06	08	10	12	14	16	18	20	22
ALASKA	7A	7A	7A	7	7	7	7	7	7	7	7	7
ARGENTINA	14	14	7A	7	7	7	7	7A	14	14	14	14
AUSTRALIA	14	14	14	14	7A	7	7	7	7	7	14	14
CANAL ZONE	14	14	7A	7	7	7	7	7A	14	14	14	14
ENGLAND	7	7	7	7	7	7	7	7	7	14	14	14
HAWAII	14	14	14	14	7A	7	7	7	7A	14	14	14
INDIA	14	14	14	7B	7B	7B	7	7	7	7	7	7A
JAPAN	14	14	14	7A	7	7	7	7	7	7	14	14
MEXICO	14	14	7A	7	7	7	7	7	14	14	14	14
PHILIPPINES	14	14	14	7A	7B	7B	7	7	7	7B	14B	14
PUERTO RICO	14	14	7	7	7	7	7	14	14	14	14	14
SOUTH AFRICA	7	7	7A	7	7B	7B	7B	14	14	14	7	7B
U.S.S.R.	7	7	7	7	7	7	7	7	7A	7A	7A	7
EAST COAST	14	14	7	7	7	7	7	14	14	14	14	14

A = Next higher frequency also may be useful
B = Difficult circuit this period
N = Normal
U = Unsettled
D = Disturbed
DX = Sporadic VHF DX

1976			JULY			1976
SUN	MON	TUE	WED	THU	FRI	SAT
				1 N	2 U	3 D
4 U/DX	5 U/DX	6 N/DX	7 N/DX	8 N/DX	9 U	10 N
11 N	12 D	13 D	14 U	15 U	16 U	17 D
18 D	19 D	20 U	21 U	22 U	23 N	24 N
25 N	26 N	27 N	28 N	29 D	30 D	31 D

73 AMATEUR RADIO

AUGUST 1976
$1.50

22 FEATURE ARTICLES!

- IC Fundamentals
- MINI-MOS Keyer
- Simple 450 MHz Rig
- Calculating Global DX
- Miniature Low Band Antenna

DAYTON 1976 12,500!

I/O COMPUTER SECTION

- Prizewinning Computer-Controlled Ham Station
- Baudot Monitor/Editor
- Safari RTTY Terminal
- 8 More I/O Articles!

Hey, CBers!

Read All About It!
Hamming Is Fantastic!

73

#190 AUG 1976

COVER: Aerial photo of the Dayton Hamvention by New Hampshire Air Photo, Marlow NH 03456.

73 Magazine is published monthly by 73, Inc., Peterborough NH 03458. Subscription rates are $10 for one year worldwide, and $20 for three years. Second class postage paid at Peterborough NH 03458 and at additional mailing offices. Phone: 603-924-3873. Microfilm edition — University Microfilms, Ann Arbor MI 48106. Tapes — Science for the Blind, 332 Rock Hill Rd, Bala Cynwyd PA 19904.

INCLUDE OLD ADDRESS AND ZIP CODE WITH ADDRESS CHANGE NOTIFICATION.

73 staff

EDITOR/PUBLISHER
Wayne Green W2NSD/1

GENERAL MANAGER
Biff Mahoney

MANAGING EDITOR
John C. Burnett

ASSISTANT EDITOR
Susan G. Philbrick

I/O EDITOR
John Craig

ASSOCIATE EDITOR
Fred R. Goldstein WA1WDS

PRODUCTION MANAGER
Lynn Panciera Fraser

ART DEPARTMENT
Robin Macrae
Virginia Mammone
Michael Murphy
Bob Sawyer

PRINTING
Brent Lawler
Michael Potter

PHOTOGRAPHY
Bill Heydolph

TYPESETTING
Barbara J. Latti

ADVERTISING
Bill Edwards WB6BED/1
Nancy Cluff WA1WSU

COMPTROLLER
Knud E. M. Keller KV4GG/1

CIRCULATION
Barbara Block
Susan Chandler
Carol Dawdy
Fran Dillon
Dorothy Gibson
Florence Goldman
Pearl Lahey
Marge Nielsen
Theresa Toussaint
Judy Waterman

MARKETING
Sherry Smythe

INVENTORY CONTROL
Kim Johansson
Marshall Raymond
Gary Slamin

PLANT MAINTENANCE
Bill Barry
Lorraine Pickering

ASSOCIATES
Robert Baker WA1SCX
E. H. Barnett W8ØIIX
Schley Cox WB9LHO
Tom DiBiase WB8KZD
Terry Fox WB4JFI
W. Sanger Green
Dave Ingram K4TWJ
Joe Kasser G3ZCZ
Bill Pasternak WA6ITF
John Schultz W2EEY/K3EZ
Walter Scott K8DIZ
Peter A. Stark K2OAW
Bill Turner WAØABI

COMPUTER ENGINEERING
James Muehlen

DRAFTING
Bill Morello
Lynn Malo
T. M. Graham Jr. W8FKW

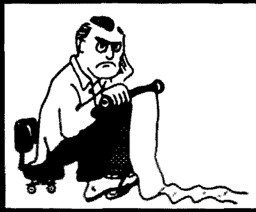

NEVER SAY DIE

...de W2NSD/1

EDITORIAL BY WAYNE GREEN

DAYTON . . . BIG

Everyone was grousing about Dayton this year, so presumably everyone was having a good time. Flea marketers lined up late Friday night to get the hot spots for Saturday . . . only to get aced out by later comers. Manufacturers arriving Thursday evening found the doors locked, and their exhibits had to be parked out overnight with fingers crossed that the usual Hamvention rip-off artists wouldn't get busy until Friday. Then there was the setting up of exhibits while being jammed with hamfesters wanting to buy stuff on Friday . . . some exhibitors never did get a chance to unpack everything!

All these are things that will probably be cured next year . . . and all have little to do with the average hamfest goer . . . who had a good deal. With over 12,500 in attendance, everything was busy . . . the flea market ran out of fleas quickly and latecomers had to settle for pawing over hundreds of tons of ham gear . . . much of it choice vintage stuff. The inside exhibits wore out their people taking in the money . . . over 100 exhibits and probably an average of $20,000 taken in per booth . . . about $2 million inside and certainly not much less outside.

The talks were for the most part well attended . . . and just about everyone who is anyone in amateur radio was there. Here are some pictures of people who stopped by the *73* booth and said hello . . . people you probably know, or should.

Johnny Johnston, FCC.

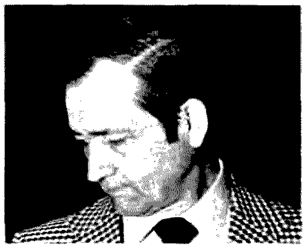

Don Payne.

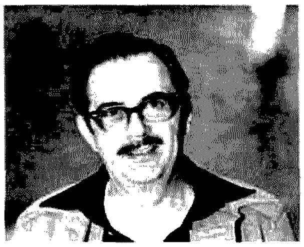

Bill DuBord, Ham Radio Center.

Bill Sanders, Data Engineering.

Clarence Munsey, Robot.

Fred Huft, Optoelectronics.

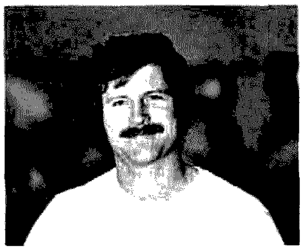

Tom Caudle, Bullet Electronics.

George Perrine, HAL Communications Corp.

IS NOVICE A KICK IN THE HEAD?

Perhaps we have become so used to starting everyone off in amateur radio with a Novice ticket that we haven't given the whole situation a lot of thought. Let's think about it together for a moment and see what comes of it.

The Novice license has a couple great benefits . . . for one it is so easy to get that it is almost ridiculous. The code can be mastered in a matter of five to ten hours . . . more like five. The theory takes about the same length of time. My code cassette teaches 75% of the users the letters and numbers of Morse code in one hour. By the way, although you do better when practicing code to keep sessions to a half hour, you do much better at first to sit for the full hour and learn all the characters . . . and one hour should about do it.

The theory required is on the high school science level and is covered totally on three one hour cassettes I've prepared. Add to that one more hour of discussing questions and answers from recent FCC Novice exams and you have a four hour course which should allow most people to pass the test easily.

Okay, so the Novice test is simple and it only takes a few days to bone up for it. The other side of the coin is what this license permits you to do.

Continued on page 14

LETTERS

BUGGED

You should tell it like it is. Re your I/O Editorial, page 81, June, 1976, *73*.

The *Bugbooks* are relatively useless unless either you purchase the kits from E&L around which they are written, or you know enough about the devices to deduce what's in the kits and start from there, in which case you probably don't need the *Bugbooks* anyway.

I know; I have the whole set and have spent a good many hours with them. I also have been in design work with TTL for some time and am studying up applications.

The *Bugbooks* don't stand alone: They need to be used with the E&L TTL kit or Micro-designer kit. There is not sufficient data to build your own kit easily, so unless you wish to purchase theirs, beware.

I will acknowledge that, if used with the E&L kits, the *Bugbooks* are probably excellent.

Joseph Naber K9AMI
Marengo IL

A very good point, Joe. I've added up the cost of the kits which go with the Bugbooks, *and they come to over $700! That puts a different light on the value of the books . . . and never mind reader complaints about the kits. — Wayne.*

MORE CARDIAC CLUES

I read in the June issue about the reader in Michigan with his pacemaker and its troubles.

My partner and I implant about 100-125 cardiac pacemakers per year. Using the Medtronic line of pacemakers exclusively, we have not had any problems with rf interference. The circuitry in the Medtronic model number 5950 demand pulse generator is such that in the presence of high rf the generator is activated rather than suppressed. On top of that, the generator is exceptionally well shielded.

Should rf activate the generator and the patient be in a paced rhythm, obviously nothing is going to happen. Should his generator be functioning in the demand mode and then be activated, he will run a competing rhythm which has some very slight danger, popularly referred to as the "one on one phenomenon," where the heart's own stimulus and the generator's stimulus fall at the same time in the cardiac cycle. The mathematical probability of this happening is extremely small, but, nevertheless, it is possible. In this rare instance it is possible to get an arrhythmia. It is also extremely unlikely that the rf field is going to be continuous for any significant period of time.

We are fortunate here in Lancaster to have a major electronics industry, the Radio Corporation of America; one of its engineers, George Gadbois W3FEY, has done considerable testing on this generator. I will ask him to comment on his thoughts and findings.

By copy of this letter, I will ask the Medtronic Corporation to voice their feelings.

In summary, I think the patient today with a good demand pulse generator has little to fear from rf, and should be permitted to enjoy the things that he is accustomed to. If there is any question, it is a very simple procedure to make a field check of an individual patient.

G. Gary Kirchner, M.D. WA3YES
Lancaster PA

BLOWING OFF STEAM

A good example of the crap that goes on when two groups of stupid people buck heads can be found in the evenings about 2100 MST most anytime that you need a laugh (or a good laxative). Just tune around 3.900-.935 kHz and listen to one group get jammed by talk, singing, tuning up, and CW on "their freq." Then this group will retaliate by turning the airwaves blue (even Nixon would blush!). The name calling, etc., is a great example of what we as communicators should not tolerate.

You see, CB and hams do have much in common. It doesn't pay to have such a "holier than thou" attitude such as some hams continue to have with the dirty laundry still to be washed. Of course, CB has quite a way to go yet, also. It's a shame that both couldn't work together.

Thanks for letting me blow off steam.

James L. Griffin
Seattle WA

P.S. Why do large advertisers continue to advertise rigs they do not have in stock?

Ham gear is selling extremely well these days and not much stays in stock on a dealer's shelf for long. Ads, which are expensive, are run only when the equipment has been promised by the manufacturer to back up the ads. It takes about two months for an ad to be prepared, published, and reach the reader via the mail. Many dealers have found that the promised rigs never arrive . . . that they've been sold instead to one of the larger dealers who is converting them to CB and selling them for $100 or so above list price. The promises continue, but no equipment ever comes, so money has to be refunded, a most painful process. Perhaps, if you pretend you are a CBer and pay the extra "conversion fee," you can get a ham rig. — Wayne.

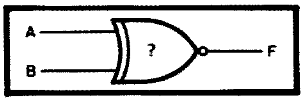

A new device in the "feminine logic" family has recently become available to experimenters. It is called the "Maybe" gate, and is shown by the logic symbol above. The device functions as follows: (a) inputs 1 and/or 2 "high" may cause the output to go "high" (but maybe not); (b) if the output does go "high" it will remain "high" unless it goes "low"; (c) if the output is "high" and either input 1 or 2 goes "low," the device will probably go "low."

I'm certain you can see the potential for the "Maybe" gate in such items as "household computers," "computer-piloted automobiles," etc. A second version, with steering gates "we can't afford it" and "threats of physical violence" (on the drawing board now), should make the device more predictable.

Don Simon W6PQS
Covina CA

COUNTERATTACK

Over the years, various state legislatures have either opposed amateur radio call plates for cars or have attempted to treat them as any other form of personalized or vanity plate — and have attempted to charge substantially extra.

For many years, California has issued call plates without extra charge. Assembly Bill 4271, recently introduced before the California Legislature, is an attempt to rewrite California laws relating to license plates. As part of this bill, amateur radio call plates would be treated as vanity plates with a $25 initial fee, $10 per year continuing extra fee and a $12 transfer charge if the plates are shifted to another car.

After talking to several local amateurs, I have agreed to coordinate, at least for Southern California, a counterattack in an attempt to prove to the Department of Motor Vehicles and the State Legislature that call plates serve a valid purpose and should not be lumped in with vanity, personalized plates.

The first step in the counterattack will be to gather information from amateurs throughout the country, and not just in California, as to as many specific instances as possible where callsign plates have assisted amateurs in performing a public service function. These instances could range from occurrences in which an individual needing emergency communications has stopped a ham because he has ham radio plates and has asked that message traffic be passed, through facilitating participation in community activities or entering into closed areas during emergencies for the purpose of handling authorized emergency traffic. I do wish to stress that I need hard information as to actual instances in which call plates have been helpful, as opposed to mere statements of opinion.

Not only will this information be utilized to oppose the pending California legislation, but I will be happy to make the information available to attorneys and radio clubs throughout the country that may have to oppose similar anti-call plate legislation in their states.

Any publicity which you could give this effort would be appreciated.

All information should be sent to Jon Gallo WA6PTM, Suite 2000, 1900 Avenue of the Stars, Los Angeles CA 90067.

Jon J. Gallo WA6PTM
Los Angeles CA

FIGHTING DIABETES

It was certainly a great pleasure meeting and speaking with Wayne at the Trenton State College Computer Fair. I have been reading *73* for about 2 years now, and enjoy it immensely.

At Trenton, I heard comments concerning *73*'s proliferation of microprocessor articles. I have to comment that I cannot agree with those who feel that microprocessors have no place in an amateur radio magazine. Well, contrary to this popular belief, most of the *real* applications for the microprocessor have come from hams. Hams have accessed computers via satellite. Hams are using computers as tools around the shack, for keeping logs, keeping track of equipment, controlling antennas, and for scoring and duping during contests. The list could continue *ad infinitum*.

As it stands, most avid amateur computerists have been able to use their machinery for such mammoth tasks as playing the game of Life or Star Trek — great fun, but isn't a kilobuck awfully expensive for a game?

Granted, computers are and should be fun, but don't you agree that each of us should have *one* serious application in mind for these tools *before* we dedicate them to games?

I am a diabetic of 24 years, on insulin from the onset of my condition at age 4. My 21 month old

daughter is also diabetic. I have an idea that could well benefit her and all other diabetics, provided that it gets the developmental support that it deserves. My theory is that the new electronic marvel, the microprocessor, provides us with the extremely accurate basis needed for an artificial pancreas.

Although slow by the standards of the huge electronic brains, the microprocessor is quite fast enough to take the digitally coded output from an analog device that would constantly test blood glucose levels. This would be compared by the processor against a pre-established glucose level for the individual patient. The digital result would then be used to establish the need for insulin, as well as determine the dosage required. This digital figure would then be used to control the analog amount of insulin administered.

This would have been impossible 6 months ago, but the state of the art in microprocessor technology has advanced so rapidly that such a device, with all of its speed and accuracy, should be available to the diabetic within the year, for less than $100.00.

I will be working on such a theory, developing whatever portions of such a unit that I can, with the hope of presenting this theory at the Personal Computing '76 Consumer Trade Fair (Atlantic City NJ, Aug. 28-29, 1976), so that its development can be advanced by the experts of the microprocessor field who will be in attendance at this show. My hope is that some of the expertise used to develop such games as Life and Star Trek can be enlisted in the development of something that will serve, rather than only amuse, mankind.

John David Jones, Jr. WA2AML
Co-Chairman, PC '76
Somers Point NJ

5 APES WHIP

Enclosed is a photo of an antenna I've been experimenting with. It's called a "5 Apes Whip." You will note that the "traps" are actually 5 apes and the second from the bottom is a small ape used as a matching stub. Thought you might be interested.

Mike Berlin WB2FIG
Brooklyn NY

ALL IS NOT ROSES

All is not roses in the mail order business. We, like every other reputable mail order house, try to satisfy our customers to the best of our ability. However, there are many pitfalls to scuttle our endeavors. The customer can help a great deal just by doing things such as making sure his address (and name) are on his order blank or letter – as well as on the envelope. (If one Peter C. Johnson would send his address along to us we would be happy to reply to his request for our catalog.) Another important thing is to *type* or *print*. So far we've managed to decipher all orders, but it has not been easy. Oh yes – don't forget your check or money order.

Not having a crystal ball, we cannot predict what items will be selling the most. In April it was 2N6081s – it seemed every order was for them. We did run out, and of course it took us six weeks to get our order from the factory. If we do run out, we try to get word to our customers that we'll be late. We would appreciate their understanding of this problem.

Last but not least is our great mail service. A lost package sent out and a lost letter stating the package wasn't received garnered us a letter of complaint from one state's Attorney General. We used to worry about how long it took a package to get to a destination (and most of our stuff goes out First Class) – now we worry about whether it will arrive at all.

But on top of it all we're still going to hang in there.

Al Smith WA2TAQ
Aldelco Semi-Conductor
Supermarket
Lynbrook NY

VERY SMART

I got some issues of *73 Magazine* and I like them very much. I am not a ham operator but a ham DXer. I do shortwave listening as a hobby. I enjoy listening to ham operators. They are very smart at the hobby. I don't understand a thing they talk about.

I am going to try my hand at ham radio and get my Novice license. I am so thankful for other ham operators who can help me. They are all so willing to give me their time and help. I am greatful to Dudley WA3JXW, who got me interested in ham radio by sending me a radiogram. He is trying to find a class for me so I can learn code and theory. It will take me a long time before I get on the air. So until I get on the air I will say "73" to all ham operators.

Larry McKinney
424 Grant Road
Adamstown PA 19501

GOOD WORK

Keep up the good work on computer theory and construction.

T. D. Miller III W4SWB
Burlington NC

ANYONE FOR DVORAK?

I have a suggestion for you (and especially your readers) to consider: I would like to see an idea swapping feature each month.

Every one of your readers has creative talent and I think that it should be shared. Maybe someone has a neat idea for a piece of equipment or a plan for using a different mode. Perhaps they have thought up a useful computer program or fun game, but they don't have the computer to run it. Maybe they just aren't any good at building things and they would like to pass the idea along to someone else.

The thing that would probably be the best feature of such a idea swap would be idea hitchhiking. The actual suggestions might not work out, but they might start someone else thinking about how to make it work.

I have seen plenty of idea generation material in the "Letters" column, and I've only had a subscription for five months. I think that ideas, even half baked ones, should be encouraged. The world and ham radio needs creative thinking.

Also, I have an idea that I would like to see passed along to microprocessor and RTTY enthusiasts (keyboard Morse types as well). The "standard" typewriter keyboard is an awkward, difficult thing to learn and use. It was developed over a half a century ago to *slow down* the typist, because the early typewriters were slow, cumbersome pieces of machinery that jammed up if the typist had even moderate skill. In the early '30s, A. Dvorak developed a keyboard that doubled the average person's typing speed and reduced learning time, as well as reduced fatigue and frustration for the beginner. The concept was to put the most used keys on the "home" row of keys, put the most used keys under the strongest fingers, and put the vowels together. The last was done because most words alternate between vowels and consonants, which leads to alternate hand rhythm.

It seems to me that if you are building or working with a keyboard that you can re-wire, the Dvorak system is worth considering.

"Standard"
qwertyuiop
asdfghjkl;
zxcvbnm,./
"Dvorak"
/,.pyfgcrl
aoeuidhtns
;qjkxbmwvz

James Whitfield
PSC Box 3204
Edwards AFB CA 93523

ANOTHER SHOOTING VICTIM

I received my first copy of *73* for May and I sure do like it. But it sure upset me about one thing. That is about Trigger Electronics, with which Larry S. Lawhorn WA4MJA had trouble. I myself ordered $47.20 of amateur gear from them on April 6th and sent a cashier's check by bank draft. I have written them once and

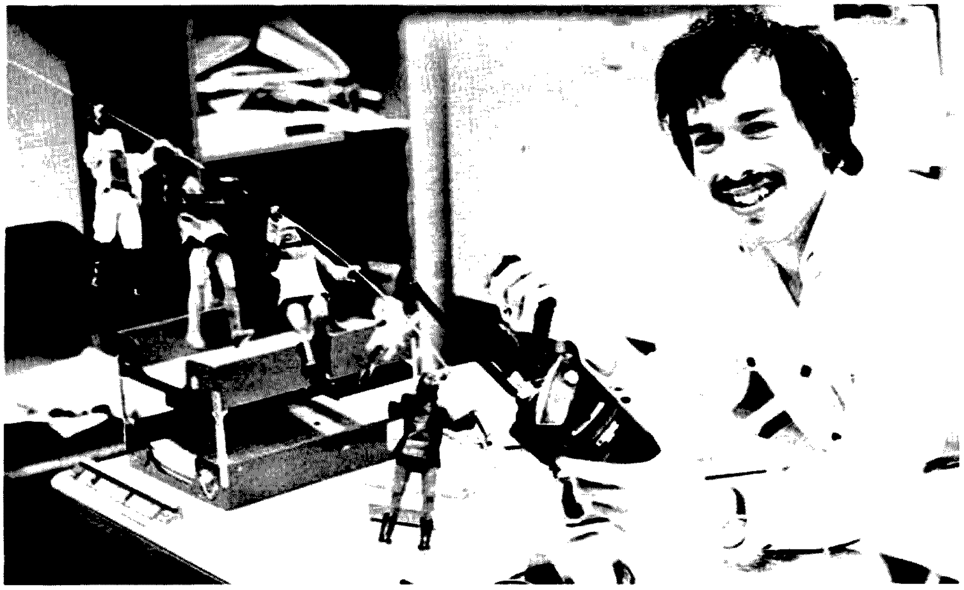

called them long distance twice. I have not got the order or my money. I am trying my best to get it and if I don't I want all hams and *73* to know it also. I have been a ham since 1961 and would not do any of my fellow hams that way. I want to warn all fellow hams. I will let you know the results. I am retired and Social Security is my only income and I cannot afford many losses like this. Keep up the good work. I look forward to the next issue.

Horace M. Lewey, Sr. WA4CUD
Greensboro NC

WHAT DOES THIS MEAN?

I have received on this day, the third of May, all at the same time, *73 Magazine* for June, 1976, *QST* for May, 1976, and *CQ* for April, 1976. What does all this mean? Cheers!

Paul G. Stecker
Westwood NJ

THICK IRISH SKULL

Your *73* article ("Those Exciting Memory Chips," June, page 96) was very good. I'm trying to get some of this new solid state down, but my thick Irish skull can't seem to absorb it. Anyway, thanks for the fine article.

Jim Sullivan W1PSW
Woburn MA

BICENTENNIAL PLATES

The Missouri Department of Revenue will honor all requests for bicentennial call letter plates. All requests must be written and should contain the applicant's name, address, type of vehicle, current call letters, bicentennial call letters which they are requesting, and must be received before July 1, 1976. The requests should be mailed to the Motor Vehicle Bureau, Box 100, Jefferson City MO 65101, Attention: Special License Unit. The fee for all Amateur Radio plates, regular or bicentennial, is an additional $5.00 over the normal cost of license plates.

C. A. Jurgens, Jr. WAØCMO
Jefferson City MO

LITTLE PARIS

This is a report on the operation of FKØKG, a YASME DXpedition to Noumea, New Caledonia.

The first QSO was with JA1AB on 30 March 1976, and the last QSO was with FG7AQ on 28 April 1976. Some 7,500 QSOs were made, operating on 28 MHz, 21 MHz, 14 MHz, 7 MHz and 3.5 MHz. Operation on all bands was made on both CW and SSB (approx. 50% each mode).

On 16 April 1976, all continents (WAC) were worked on 7 MHz CW in two hours and 5 minutes. QSOs were F9YZ (0605 Z), K6HMO (0608 Z), ZL2AMP (0625 Z), PY1ARS/4 (0630 Z), EA8BF (0808 Z), and JA1ABU (0809 Z).

We were amazed to discover Noumea to be the largest and most modern town that we have visited in the Pacific Ocean areas (excluding Honolulu). It is a "little Paris," with many beautiful homes, apartment buildings, modern department stores, traffic jams, etc. Some of the local city buses have true hi-fi stereo sound on them for the enjoyment of the passengers. Speakers on one side of the bus are on one channel and speakers on the other side are on another channel. The only problem with Noumea is that everyone speaks *French*. We know a little French but could have enjoyed the city more if our French was better.

The taking of radio gear in and out of New Caledonia was easy, and our licenses to operate were obtained rapidly. All in all, it was a great place for a DXpedition. We had a good time, and band conditions, although erratic, were good.

Lloyd Colvin W6KG
Iris Colvin W6DOD
Noumea, New Caledonia

COLOMBIAN MOONBOUNCE

The Mount Airy VHF Radio Club (The Pack Rats) is pleased to announce that it has received permission from the Colombian Minister of Communications to conduct a moonbounce experiment from South America on 432 MHz.

As of April 27, no South American continent stations had been available for 432 MHz EME work. The station will be located near Barranquilla and will be operated by S. William Olson W3HQT, Walter Bolman K3BPP, and Anthony Souza W3HMU. Arrangements for the trip are being made by Bolmar Aguilar WB3AOP, Elliott Weisman K3JJZ, and Socrates Martinez WB3AFY.

Colombian liaison is being handled by Dr. Atenogenes Blanco HK1BYM, who has coordinated a group of radio amateurs in Colombia representing all of the active radio clubs in Barranquilla (HK1RCB, HK1EE, HK1LR). Dr. Blanco's address is Apartado Aereo 15-020, Barranquilla, Colombia, South America.

Operation will be on 432.040 MHz, using a portable 16 yagi array especially constructed for this project. Liaison during the South American operation will be maintained with Pack Rat stations stateside. Those wishing to convey information to the expeditionary force should contact Ernie Kenas W3KKN or Bertha Kenas W3TNP, 2823 Old Welsh Road, Willow Grove PA 19090, (215)-659-3485.

Communications with the expeditionary force in Colombia may be obtained via Dr. Blanco, whose address is listed above.

It is our intent to work as many of the 432 moonbounce stations as possible from this location, and schedules have been made with all of the 432 EME stations known to be active at this time. Anyone requiring additional information with regard to the expedition may contact me.

Elliott T. Weisman K3JJZ
8533 Algon Ave.
Philadelphia PA 19152
(212)-742-3525

ALL-STAR ALTAJ

I recently placed an order with Altaj Electronics, for the miserly sum of $3.79. Although Altaj is Texas-based, and I live in Mass., I received the order (in perfect condition) in less than five full days. Furthermore, the shipping cost, for which Altaj picked up the full tab, came to $1.40.

I wonder if all of your readers are aware of the fact that this outfit has no minimum order, and absolutely does not charge for postage or handling.

Malcolm Leonard
New Bedford MA

LIKE IT!

Received my MAY issue of *73* today in *March* — uh, but, you see, er — that is to say, uh, how — I've *never* — *no one* — er, not even — no! it's just *not* — uh, especially since — and then too, there's, uh — son of a gun! Great! F.B. articles, too! Like it!

Bud Resch WØFTD
Independence MO

VERADA 214

I feel I should write you in regard to one of your advertisers in *73*.

In April I saw an ad from Verada 214 and ordered an amplifier from there. It was to be complete with face plate and knobs. The order came by mail (postpaid) in less than a week. Really pleased me with their prompt service. But, it was missing the knobs. A little disappointment, but knobs are cheap, no sweat. Tuesday of the next week, before I had a chance to either rewrite them or buy knobs, another package comes from Verada 214: not only the knobs for the tuner, but a short note from J. Rutherford, apologizing for the mistake.

I certainly would recommend them to any of your readers. Add Verada 214 to the long list of people that are F.B.

Thanks for a fine mag (lifetime subscriber to *73*), and for your dedication to allowing only reliable companies to place ads in your mag.

Harry Mitchell WB2SFZ
Baldwinsville NY

DOWN UNDER

Just a little note to let you know about VHF activity in VK. Plenty of FM activity — repeaters in all capital cities and big towns. Mostly commercial gear — ICOM 22s, TR10s, etc. The advent of the YAESU 620 and 220 VHF SSB gear has given it a big boost. Since the commencement of the year, the new ICOM IC-202 and IC-502 low power portable 6 and 2m SSB gear has made VHF even more popular. Some surprising QSOs over amazing distances with the little units. Everyone is making solid state linears run 10 W and 40 W PEP. OSCAR 6 and OSCAR 7 are accessible with the units and the linears and a moderate beam. ZLs and P29s are some of the DX.

S. J. Mahony VK5ZIM
Elizabeth Downs
South Australia

DIGESTING

After the customary six week incubation period following each and every subscription application, I received the May '76 copy of *73* and have spent about a month memorizing every page. This done, I eagerly anticipated the next month's copy. Yesterday I received the April '76 copy, which I am likewise digesting, and I'm sure I will be equally anxious for the March '76 copy. Keep up the good work!

Lyle Ross W5UPD
Richardson TX

P.S. Please don't bother to send the January '76 issue because a fellow ham who received six copies gave one to me.

Ham Help

I need Ham Help!

Gregory L. Smith
5604 West Overland Pass
Peoria IL 61607
(309)-697-3324

Keep up the very good work on your magazine. It's the best in my book. Love everything in the issues, even the advertising.

Would like to get in touch with someone owning a Kenwood TS-511S transceiver. I have been on the air for a year now and still haven't heard anyone with this kind of set. Would like to compare notes and iron out a few problems I have with the set. Thank you.

Leo Patin WB9PCO
1800 North Timber Trail Lane
Oconomowoc WI 53066

SPEEDY SERVICE

Just a few words along with my Reader Service requests to say that your code tapes are great! I just listened to the five words per minute tape every now and then, and after a couple of weeks I had passed my Novice code test with ease. I'm now awaiting my Novice license, and looking forward to getting on the air.

Gary E. Szatkowski
Sault Ste. Marie MI

P.S. I also compliment your Reader Service and its speedy replies — and the overall magazine. Keep it up!

WHY NOT?

I hereby submit my first letter to your honorable publication, which I was introduced to by Ken Cole W7IDF, and have anxiously awaited receipt of each and every month.

Just read your May letters column, and agree with Steve Uhrig WA3SWS. How about a "White House" type article on *73*, Inc.? We *must know* what the people who run the magazine look, act, and operate like. Pictures, especially, would help. Let's hear it . . . and see it!

Excellent magazine you've got there, and keep up the good work, including subversive activities in an attempt to overthrow the ARRL regime, if that's what you're after. F.B.

As a CBer and ham, I can appreciate all of what both titles stand for. Being KDZ-9707 has its advantages over WN7AVF, and vice versa. Personally, I think the CB situation is and/or will get better. 10-4?

More basic logic articles like you had last year. F.B. on your new I/O section. Only wish I could afford a microprocessor.

New format is good. All good things must come to an end, and the old minisize did. Big size offers more room, detail, and ease of reading. I give my full approval.

Before you get too carried away with this computer bit, as I said before, include more basic explanations for us Novices and equally uninformed Extras, if there are any.

Have one of your tapes, the 14 per one. Will say I listened a *total of 3 hours* to be able to pass the General. Great tape(s) . . . used it twice, since I failed the written part the first time. F.B.

Have been receiving *QST*, and your magazine is far more interesting, informative, humorous, etc. Speaking of humor, why not put in a few cartoons with a technical or ham-political theme? We need a laugh in these times of trouble, etc., etc., etc. Your editorials are also very good, and I also like the "Autobiography of an Ancient Aviator."

Let's have lots of ATV, repeater stuff, HF-CW, SSB, SSTV, and computers and computer technology. You'll undoubtedly kill *HR, CQ, QST*, or anybody else, with a lot of new, bright stuff.

As for increasing membership (in ham radio), CB offers the ideal source.

There's hope for "conversion." Amen. Ham conventions and hamfests should be open to CBers, without any ill feelings (or at least just a grit-your-teeth smile). Here CBers could become interested and could be welcomed by hamdom. Of course, generally (in the real world), they would not be welcomed, but they could be. Why not????

Robert B. Barnard WN7AVF
Seattle WA

MORE MAPLE HILLERS

WB2YCR, the radio voice of Maple Hill High School, Castleton, New York, is proud to announce the licensing of four new amateur radio operators. The four young men recently completed an intense six week course taught by WA2UON at Maple Hill, and successfully completed FCC tests showing both their ability to send and receive the international Morse code and their mastery of basic radio theory and regulations.

The new radio men are: Al Ferreira WN2EQP, Geoff Schad WN2EQN, Robert Porter WN2EQO, and Scott VanNederynen WN2EQQ. All four are part of the Maple Hill High School Amateur Radio Club (WB2YCR) and are also members of the high school's audio-visual special team, "The Media Men."

John Kienzle WA2UON
Castleton NY

NEVER MATCH 2M FM

I have been buying your great magazine, and this was the deciding factor which has made me start learning that famous Morse code.

I plan to get the General license during the month of September. Hopefully, before this year is over I will be on the air.

I am a computer programming major at Florida International University, and I think that your computer section is great — but please don't cut the amount of articles and construction projects about 2 meter FM.

Keep up the good work.

Rene A. Nunez
Miami FL

P.S. I have a CB license, even if I don't have a transceiver right now. On the road it's a great help, but it will never be able to match 2m FM.

Repeater Update

Fred Goldstein WA1WDS

A — Addition; C — Change; D — Deletion

A	MA	WR1AFO	Belmont	147.315
A	MA	WR1AAA	Malden (29.685)	29.52
A	MA	WR1AFP	Fitchburg	224.34
A	MA	WR1AGJ	Saugus P	147.015
C	MA	WR1AFG	Worcester	146.325
A	MA	WR1ACO	Malden	449.40
A	MA	WR1AFO	Belmont	448.10
A	RI	WR1AFY	Newport	147.36
C	VT	WR1AAK	Killington	146.88
A	NJ	WR2AHV	Sussex	147.30
A	NJ	WR2AFL	Atlantic City	146.94
C	NJ	WR2ACQ	Northfield	146.745
C	NJ	WR2AHM	Pine Hill	146.866
A	NY	WR2	Buffalo (52.05)	53.05
C	PA	WR3AGB	Carnegie (147.63)	147.03
C	PA	WR3AGU	Mahouponoy	147.21
A	PA	WR3AEV	Wilkes-Barre	146.88
A	PA	WR3AGV	OuBois	146.73
D	PA	WR3	Hazleton	146.76
C	PA	WR3PHL	Valley Forge	146.76
A	KY	WR4	Ashland	146.82
C	KY	WR4ALH	Ashland	147.24
A	KY	WR4	Falmouth	146.73
A	KY	WR4	Louisville	146.64
A	KY	WR4	Louisville	146.94
A	TN	WR4ANW	Cookeville	146.67
C	VA	WR4ABR	Vienna	146.91
A	VA	WR4APE	Winchester PL	147.30
C	LA	WR5AFJ	Baton Rouge	146.94
C	LA	WR5AKA	New Orleans T1.8	146.76
A	LA	WR5	Jonesboro	146.88
A	NM	WR5AJS	Roswell	146.76
C	NM	WR5AHA	Las Cruces	146.76
A	NM	WR5ABG	Las Cruces	146.64
A	NM	WR5AEQ	Sandia Crest	444.00
A	OK	WR5	Oklahoma City	147.36
C	OK	WR5AJP	Oklahoma City	146.94
C	OK	WR5ADF	Oklahoma City	146.76
A	OK	WR5	Oklahoma City (147.63)	147.03
C	OK	WR5AJP	Oklahoma City	444.10
A	OK	WR5ACB	Oklahoma City	147.21
A	OK	WR5ACB	Oklahoma City	447.80
A	CA	WR6AMZ	Inyokern	146.64
A	CA	WR6AEP	Ventura	447.325
A	CA	WR6ANW	Santa Barbara	146.79
A	ID	WR7AFH	Burley-Mt. Harrison (146.40)	147.00
A	ID	WR7	Pocatello	146.88
A	NV	WR7	Reno	146.79
C	OR	WR7AGX	Roseburg-Scott Mt.	146.76
C	MI	WR8AIJ	South Lyons	147.21
A	OH	WR8AHJ	Cincinnati (147.60)	147.00
C	OH	WR8AGO	Hillsboro	147.21
A	OH	WR8	Louisville	147.12
C	OH	WR8ACQ	Mansfield TT34	146.94
A	OH	WR8AIW	Youngstown	147.915
A	OH	WR8AED	Uniontown	147.09
A	OH	WR8ACV	Lancaster	146.025
A	OH	WR8	Dayton	146.175
A	OH	WR8	Dayton	147.855
A	OH	WR8	Troy	147.015
A	OH	WR8	Mainville	147.315
A	OH	WR8AHE	Cincinnati	147.285
A	OH	WR8AHL	Cincinnati	147.945
A	OH	WR8ADZ	Cincinnati PL	147.975
A	OH	WR8AED	Uniontown	223.98
A	OH	WR8ACV	Dayton	444.25
A	WV	WR8	Parsons	146.73
A	IN	WR9AEB	Vincennes	147.67
A	KS	WRØAKL	Derby	146.79
A	KS	WRØAJH	Emporia	146.91
A	KS	WRØAJI	Harrington	146.61
A	KS	WRØAJZ	Topeka	146.67
C	KS	WRØAIP	Salina (147.63)	147.03
C	KS	WR9AGP	Wilson	146.97
C	KS	WRØAJW	Coffeyville	146.61
			Kansas Coordinator:	
			R. D. "Slim" Cummings WAØEDA	
			510 W. Fifth St.	
			Pittsburg KS 66762	
A	PQ	VE2KPG	Hull-Ottawa	147.36
A	ON	VE3RRR	Windsor (RTTY, SSTV)	147.30
A	ON	VE3SVR	Morrisburg	146.76
A	ON	VE3TFM	Toronto	223.98
A	ON	VE3MGB	Midland	147.18
A	ON	VE3LSP	Montreal River (146 46)	147.06
C	SA	VE5ESK	Jansen	146.76
C	SA	VE5SCR	Swift Current	146.61
A	SA	VE5MMR	Arcola	146.82
D	SA	VE5	Weyburn/Carlisle	146.82
A	SA	VE5	Melville	146.88
C	BC	VE7ELK	Chilliwack (146.40)	147.00
C	AUS	VK2RWI	Sydney N.	147.00
C	AUS	VK2RLE	Sydney S.	146.80
D	AUS	VK2	Ulladulla	146.90
C	AUS	VK2RAW	Wollongong	146.85

CONTESTS

Editor:
Robert Baker WA1SCX
34 White Pine Drive
Littleton MA 01460

VENEZUELAN INDEPENDENCE CONTEST

Phone
Starts: 0000 GMT July 3
Ends: 2400 GMT July 4
CW
Starts: 0000 GMT July 31
Ends: 2400 GMT August 1

Contacts with stations in the same country are permitted on all bands for country multiplier credit, but have zero point value. There are 4 classes of competition:

Single operator — single band; Single operator — all bands; Single transmitter — multi-operator; Multi-transmitter — multi-operator (only 1 xmtr per band).

Use all bands 80 to 10 meters.

EXCHANGE:
RS(T) and progressive QSO number starting with 001.

SCORING:
QSOs with stations in different country count 2 points, while with stations in same country count zero points. Venezuelan stations may, however, contact each other on 40 and 80 meters for 1 point per QSO but will score zero points for contacts with other YVs on 10, 15, and 20 meters. The final score is the total QSO points multiplied by the sum of YV zone call areas and countries on each band.

AWARDS:
A trophy will be awarded to first place in each category. Medals will be given to the highest scoring station in: N. America, Central America, S. America, Caribbean, Europe, Asia, Oceania, and SWLs. No station can be awarded more than once! Certificates will be issued to all stations having made the following contacts: Caribbean and N., Central, and S. America (except YV) — 20 YVs plus 10 different countries for SSB and 15 YVs plus 10 different countries for CW; Europe and Africa — 10 YVs and 10 different countries; Asia and Oceania — 5 YVs and 10 different countries; YV stations only — 30 YVs on 40 and 80 mtrs, 10 different countries (including YV), and 50 QSOs with foreign stations *for SSB; On CW* — 15 YVs on any band plus 10 different countries (including YV), and 50 QSOs with foreign stations; SWLs — 50 complete QSOs, including a minimum of 10 YVs. Both exchanged numbers must be shown in the log for credit. Medal to the SWL with the maximum QSOs.

ENTRIES:
Each entry must be accompanied by a summary sheet showing all scoring information, category of competition, mode, name, callsign, address in *block letters*, and a signed declaration that all contest rules and regulations for amateur radio in the country have been observed. A remittance of S2 or equivalent IRCs is requested with each entry to cover awards and handling. All entries must be postmarked no later than Sept. 15, 1976, for the phone section and October 15, 1976, for the CW section. SWL deadline is December 15, 1976. Mail logs to: Radio Club Venezolano, P.O. Box 2285, Caracas 101, Venezuela. Logs must show all times in GMT. Indicate YV zone call area and country multiplier only the first time it is worked on each band. *Use a separate sheet for each band!*

CALENDAR

July 3-4	Venezuelan Indep. Contest — Phone
July 17-19	CW County Hunters Contest*
July 24-25	ARRL Bicentennial Celebration
July 31-Aug 1	Venezuelan Indep. Contest — CW
Aug 7-8	10-10 Net Summer QSO Party
Aug 14-15	European DX Contest — CW
Aug 21-22	SARTG Worldwide RTTY Contest
Aug 21-23	New Jersey QSO Party
Aug 28-29	Arizona QSO Party
Aug 28-30	All Asian DX Contest — CW
Sept 4-5	ARRL VHF QSO Party
Sept 4-5	Albatros SSTV Contest
Sept 11-12	European DX Contest — Phone
Sept 11-12	Washington State QSO Party
Sept 18-19	Scandinavian Activity Contest — CW
Sept 25-26	Scandinavian Activity Contest — Phone
Sept 25-27	Delta QSO Party
Oct 2-3	VK/ZL/Oceania Jubilee DX Contest — Phone
Oct 8-10	CD Party — Phone
Oct 9-10	RSGB 21-28 MHz Contest — Phone
Oct 9-10	VK/ZL/Oceania Jubilee DX Contest — CW
Oct 16-17	RSGB 7 MHz Contest — CW
Oct 16-18	CD Party — CW
Oct 17-18	Manitoba QSO Party
Oct 30-31	CQ Worldwide DX Contest — Phone
Nov 5-8	IARS-CHC-FHC-HTH QSO Party
Nov 6-7	RSGB 7 MHz Contest — SSB
Nov 6-8	ARRL Sweepstakes — CW
Nov 13-14	European DX Contest — RTTY
Nov 14	OK DX Contest
Nov 20-22	ARRL Sweepstakes — Phone
Nov 27-28	CQ Worldwide DX Contest — CW
Dec 4-5	ARRL 160 Meter Contest
Dec 11-12	ARRL 10 Meter Contest
Dec 31	Straight Key Night

* = described in last issue

VK7 USA BICENTENNIAL CONTEST

Starts: 1400 GMT, Saturday, July 3
Ends: 1400 GMT, Sunday, July 4

RULES:
There will be two sections to the contest: a) single band, transmitting open (single operator); b) multiband, transmitting open (single operator). All U.S.A. and VK7 amateurs may enter the contest, whether their stations are fixed, portable or mobile. Amateurs may use all modes, and crossmode contacts are permitted. All amateur bands may be used, but crossband contacts are not permitted. Skeds for other bands are allowed.

SCORING:
VK7 stations: 1 point per contact per band and, in addition, 5 bonus points for each new state worked on each band. U.S.A. stations: 1 point for the first contact, 2 points for the second, 3 points for the third, etc. A station may be contacted once only per band for scoring purposes.

NUMBERS:
Before points may be claimed for a contact, numbers must be exchanged and acknowledged. The number will be made up of RS (phone) or RST (CW) reports, plus the year in which the operator first received his license. U.S.A. stations must also give the state they are in.

LOGS:
Logs must show date and time in GMT, band, callsign of station contacted, number sent, number received, and score. VK7 stations must also underline and show each new state worked.

SUMMARY SHEET:
Summary sheet must show callsign, name and address (in block letters), details of equipment and power used, whether single or multiband log (entry), and score.

ENTRIES:
All logs should be sent to: The Contest Manager, P.O. Box 1010 Launceston, Tasmania 7250, Australia. They must be in the hands of the contest manager before 1 November 1976.

ARRL BICENTENNIAL CELEBRATION

Starts: 0000 GMT Saturday, July 24
Ends: 2359 GMT Sunday, July 25

Object of the contest is for US stations to work as many stations as possible, while non-US stations will try to work as many US stations as possible. US to US contacts are permitted. US entries must be single operator while non-US entries may be either single or multi-operator. Multi-transmitter, however, is not permitted. No more than 36 hours of the contest period may be operated, with time-outs not less than 15 minutes long and no more than 8 time-outs total. Each station may be worked once on voice and once on any other mode. No repeater contacts, except through OSCAR, are allowed. A station may not be worked with a regular call followed by a contact with a bicentennial call; only one contact per mode.

EXCHANGE:
US stations send RS(T), state, and state entry number into the Union (see list below). Non-US stations send RS(T) and consecutive serial number starting with 001.

SCORING:
Simple: Final score equals number of QSOs; *no multipliers.*

AWARDS:
US stations: 1776 or more QSOs, 200 or more QSOs, 50 or more QSOs on or above 50 MHz, ARRL section high score, WAS, 200 or more QSOs with non-US stations. Non-US stations: 1776 or more QSOs, 200 or more QSOs, 50 or more QSOs on or above 50 MHz, country high score, WAS, and worked 13 original colonies.

ENTRIES:
A summary sheet, log sheets, and check sheets are required from all US entries. Summary sheet and log sheets required from all non-US entries.

Special summary and log sheets will be available from ARRL headquarters if an SASE is enclosed. Entries must be postmarked no later than September 1st. Send all requests for logs and all entries to: ARRL, 225 Main Street, Newington CT 06111.

ORDER OF STATE ENTRY INTO UNION:

1 – CT – 5, ME – 23, MA – 6, NH – 9, RI – 13, VT – 14; 2 – NJ – 3, NY – 11; 3 – DE – 1, MD – 7, PA – 2; 4 – AL – 22, FL – 27, GA – 4, KY – 15, NC – 12, SC – 8, TN – 16, VA – 10; 5 – AR – 25, LA – 18, MS – 20, NM – 47, OK – 46, TX – 28; 6 – CA – 31, HI – 50; 7 – AK – 49, AZ – 48, ID – 43, MT – 41, NV – 36, OR – 33, UT – 45, WA – 42; 8 – MI – 26, OH – 17, WV – 35; 9 – IL – 21, IN – 19, WI – 30; 0 – CO – 38, IA – 29, KS – 34, MN – 32, MO – 24, NE – 37, ND – 39, SD – 40, WY – 44.

RESULTS

Results of the 10-10 International Net of Southern California, Inc. Annual Winter QSO Party

The two top scorers in each district were:

K1KYC	221/522
WA1STR	215/507
K9EGA/2	292/723
K2ARO	198/532
WA3VQF	214/531
WA3INW	196/485
K3IGA/4	124/322
WA4EBN	110/299
WA5JDU	152/372
WB5FII	133/315
WA6UZA	90/192
WA6MOF	96/180
K7PXI	83/207
WA7YCQ	54/198
WB8FAG	189/464
W8DMY	148/356
WB9IUR	131/340
W9LUK	122/327
WBØCEI	118/294
WBØRCQ	103/241
KH6EXK	10/29
KH6IJS	4/10
VE2XL	9/12
VE7DEN	57/135
TI2WX	110/314
LU7FAG	138/386
JH3GCN	26/51
JA3XOG	21/46
VK4AMO	20/57
ZL1ARO	17/48

10X Chapter scores were:

S. N.E. Nutmeg	6399/14758
GATT (Cincinnati)	3390/7640
LIARS (NY-NJ)	2561/6318
Michigan Robins	1797/3603
San Francisco Bay	1751/3316
Gateway (St. Louis)	1276/3013
Sky Blue Waters	981/2066
Delaware Valley	806/1941
Chief Seattle	826/1622
So. California	534/1040
Thunderbird (Ariz.)	352/824
Minute Man (Mass.)	351/774
Land o'Lincoln	212/547
Houston Chapter	224/518
Milwaukee	164/413
Colorado	176/366
Cypress (Florida)	149/357
Bartlett Pair (Ill.)	131/340
Md. - D.C.	164/338
Sun Coast (Fla.)	71/169
All American City	58/138
Rio Grande	55/148
Devil's Triangle	55/123
Gr. Smoky Mt.	35/103
New South (Ga.)	43/98
Red River Valley (La.)	35/95

10-10 NET SUMMER QSO PARTY

Starts: 0000 GMT Saturday, August 7
Ends: 2400 GMT Sunday, August 8

All contacts must be made on 10 meters, any mode. Participation by non-members is welcomed but they are not eligible for awards. To become a member and receive a number, send a list of 10 members worked (DX work 5) and $3.00 to the manager in your district (DX to W6LRY).

EXCHANGE:
Name, QTH, and 10-10 number and chapter.

SCORING:
Members score 1 point for each contact and add 1 point if with another member (maximum of 2 points per QSO).

AWARDS:
First and second place certificates to each US district, Hawaii and Alaska, each VE province, S. Amer., Central America and Caribbean, Europe, Africa and South Atlantic, Asia and N. Pacific, Australia, New Zealand and S. Pacific.

ENTRIES:
Logs must include date/time, station, name, QTH, and 10-10 number. Members only should send logs to: Grace Dunlap K5MRU, Box 13, Rand CO 80473, postmarked no later than Sept 30th. Results will be listed in the Winter Bulletin (from 10-10).

EUROPEAN DX CONTESTS
CW – PHONE – RTTY

CW
Starts: 0000 GMT August 14
Ends: 2400 GMT August 15

Phone
Starts: 0000 GMT Sept 11
Ends: 2400 GMT Sept 12

RTTY
Starts: 0000 GMT Nov 13
Ends: 2400 GMT Nov 14

Only 36 hours of operation out of the possible 48 are permitted for single operator stations. The 12 hours of non-operation may be taken in one to three periods anytime during the contest. All bands, 80 to 10 meters, may be used on the specified mode. Classifications include: single operator-all band, and multi-operator-single transmitter. Each station may be worked once per band. A contest QSO can only be established between a non-European and a European station. In the RTTY section only, contacts with one's own continent are permitted and will count 1 point per QSO. Multipliers will be counted as described below.

EXCHANGE:
RS(T) and progressive QSO number starting with 001.

SCORING:
Each QSO counts 1 point. Each confirmed QTC (given or received) counts 1 point (see below) but only 10 QTCs to the same station on all bands together are allowed. The multiplier for non-EUR stations is the number of EUROPEAN countries worked on each band. Europeans will use the ARRL country list. In addition each call area in the following countries will be considered a multiplier: JA, PY, VE, VO, VK, W/K, ZL, ZS, UA9 and UAØ. Each multiplier may be multiplied by the following factor depending on the band: on 80 meters, multiplier times 4; on 40 meters, multiplier times 3; on 20, 15, 10 meters, multiplier times 2. The final score is the total QSO points plus QTC points multiplied by the sum total of multipliers from all bands.

QTC TRAFFIC:
Additional point credit can be included by utilizing QTC traffic. A QTC is a report of a confirmed QSO that has taken place earlier in the contest and later sent back to a EUR station. It can only be sent from a non-EUR station to a EUR station, the general idea being that after a number of EUR stations have been worked, a list of these stations can be reported back during a QSO with another station. An additional 1 point credit can be claimed for each station reported. Each QTC must contain the time, call and QSO number of the station being reported and can be reported only once (but not back to the originating station). You may work the same station several times, with a maximum of 10 QTCs to that station, but the original contact is the only QSO with QSO point value.

AWARDS:
Certificates to the highest scorer in each classification in each country, reasonable scores provided. Continental leaders will be honored. Certificates will also be given to stations with at least half the score of the continental leader. Additional certificates and plaques will also be awarded. The minimum requirements for the awarding of certificates and trophies are 100 QSOs or 10,000 points.

ENTRIES:
It is suggested that the log sheets of the DARC or equivalent be used. Send a large size SASE for logs and summary sheets. Use a separate log for each band. Violation of the rules of this contest, unsportsmanlike conduct, or taking credit for excessive duplicate contacts will be deemed sufficient cause to disqualify. The decisions of the Contest Committee are final. Mailing deadlines for entries are: CW – September 15; Phone – October 15; RTTY – December 1. Mail entries to: WAEDC – Committee, D-895 Kaufbeuren, Postbox 262, Germany. North American residents may send entries to: H. E. Weiss WA3KWD, 762 Church Street, Millersburg PA 17061.

EUROPEAN COUNTRY LIST:
C31 – CT1 – CT2 – DL – DM – EA – EA6 – EI – F – FC – G – GC Guer – GC – Jer – GD – GI – GM – GM Shetland – GW – HA – HB9 – HBØ – HV – I – IS – IT – JW Bear – JW – JX – LA – LX – LZ – M1 – OE – OH – OHØ – OJØ – OK – ON – OY – OZ – PA – SM – SP – SV – SC Crete – SV Rhodes – SV Athos – TA1 – TF – UA1346 – UA2 – UB5 – UC2 – UN1 – UO5 – UP2 – UQ2 – UR2 – UA Franz Josef Land – YO – ZA – ZB2 – 3A – 4U1 – 9H1.

SARTG WORLDWIDE RTTY CONTEST

Contest Periods:
0000 to 0800 GMT Saturday, August 21
1600 to 2400 GMT Saturday, August 21
0800 to 1600 GMT Sunday, August 22

The 6th WW RTTY Contest is again sponsored by the Scandinavian Amateur Radio Teletype Group. Use all bands, 80 to 10 meters.

CLASSES:
Single operator up to 100 Watts input; single operator over 100 Watts input; multi-operator single transmitter (any power); SWLs.
EXCHANGE:
RS(T) and QSO number.
SCORING:
QSO points as follows: own country = 5 points; other country in same continent = 10 points; other continent = 15 points. In USA, Canada, and Australia, each call district will be considered as a separate country. The same station may be worked once on each band but only RTTY QSOs count. Final score is total QSO points times the number of different ARRL countries and W, VE, and VK call districts on each band. SWLs use the same rules for scoring based on stations and messages copied.

AWARDS:
Awards will be issued to the top stations in each class, country, W, VE, and VK call district.

ENTRIES:
Mailing deadline is Sept 18, 1976. Logs must contain: band, date and time in GMT, callsigns, exchanges sent and received, points, and multipliers. Use a separate sheet for each band and enclose a summary sheet showing the scoring, classification, your call, name and address. Comments will be very much appreciated. Send your log to: SARTG Contest and Award Manager, C. J. Jensen OZ2CJ, Meisnersgade 5, 8900 Randers, Denmark.

RESULTS

Results of 8th Giant RTTY Flash Contest
The top 10 scorers of the 51 entries:

Call	*Score*
I1BYS	13,379.542
K4GMH	8,528.384
W3EKT	8,933.145
DLØTD	5,128.512
WA2JVB	3,879.288
G3VXO	3,663.900
I6NO	2,898.135
WAØYDJ/4	2,502.162
SMØOS	2,086.080
K7BV	1,986.944

The 1975 RTTY Championship was won by I1BYS with 120 points, while W3EKT finished second.

NEW JERSEY QSO PARTY

Contest Periods:
2000 GMT Saturday, August 21 to 0700 GMT Sunday, August 22
1300 GMT Sunday, August 22 to 0200 GMT Monday, August 23

The 17th annual NJ QSO Party is again sponsored by the Englewood ARA. Phone and CW are considered the same contest. Each station may be contacted once on each band, and phone and CW are considered separate bands. Duplicate QSOs may not be made using bicentennial calls! NJ stations may work other NJ stations. General call is: "CQ New Jersey" on phone or "CQ NJ" on CW. NJ stations are requested to identify themselves by signing "DE NJ" on CW or "New Jersey calling" on phone. Stations planning active participation in NJ are requested to advise the EARA by August 7th, so that full coverage from all counties may be planned. Portable and mobile operation is encouraged.
FREQUENCIES:
1810, 3535, 3905, 7035, 7135, 7235, 14035, 14280, 21100, 21355, 28600, 50-50.5, 144-146. Suggest phone activity on even hours; 15 mtrs on odd hours (1500 to 2100 GMT); 160 meters at 0500 GMT.
EXCHANGE:
QSO number, RS(T), and QTH – ARRL section or country. NJ stations will send county for their QTH.
SCORING:
Non-NJ stations multiply total number of QSOs times number of NJ counties worked (21 max.). NJ stations: W and VE QSOs count 1 point; DX stations count 3 points. Multiply total number of QSO points times number of ARRL sections (including NNJ and SNJ – 75 max.). KP4, KH6, KL7, KZ5, etc., count as both 3 point DX contacts and as section multipliers.
AWARDS:
Certificates will be awarded to the first place station in each NJ county, ARRL section, and country. In addition, second place certificates will be awarded when 4 or more logs are received. Novice and Technician certificates will also be awarded.
ENTRIES:
Logs must show GMT date and time, band, and mode, and be received not later than September 18, 1976. The first QSO for each claimed multiplier should be indicated and numbered, and a checklist of contacts and multipliers should be included. Multi-operator stations should be noted and calls of participating operators listed. Logs and comments should be sent to: Englewood Amateur Radio Assoc., Inc., 303 Tenafly Road, Englewood NJ 07631. A #10 size SASE should be included for results.

ARIZONA QSO PARTY

Starts: 1700 GMT Saturday, August 28
Ends: 1700 GMT Sunday, August 29

The full 24 hour contest period may be worked. All stations are eligible to enter. Out-of-state stations work AZ stations; AZ stations work all stations. Stations may be worked on both phone and CW once per band on 80 to 10 meters. All stations are encouraged to use bicentennial callsigns.
EXCHANGE:
RS(T) and QTH; AZ county for AZ stations; state or country for non-AZ stations.
SCORING:
All stations score 1 point per SSB QSO, 2 points per CW QSO, and 4 points per Novice QSO. There are 2 scoring categories for AZ stations: single and multi-op. AZ stations operating outside their home county receive a bonus of 50 SSB QSO points. AZ stations multiply QSO points (plus any bonus) by the number of states/VE provinces/DX countries worked. Non-AZ stations multiply total QSO points by the total number of AZ counties worked on each band (14 max.).
FREQUENCIES:
Phone – 3935, 7235, 14285, 21360, 28575; CW – 3560, 7060, 14060, 21060, 28060; Novice – 3725, 7125, 21125, 28125.
AWARDS:
Certificates will be awarded to the top 3 AZ stations and to the top station in each state/VE province/DX country. A minimum of 5 QSOs is required to be eligible for an award. Include a description of all equipment used and the usual signed contest declaration. Include a legal size SASE for a copy of the results and any award. All logs must be postmarked on or before Sept. 30, 1976. Send all entries to: Motorola Amateur Radio Club, 8201 E. McDowell Rd., Scottsdale AZ 85252.

ALL ASIAN DX CONTEST
CW

Starts: 1000 GMT August 28
Ends: 1600 GMT August 30

All amateur bands under 30 MHz may be used with power, mode and frequencies as permitted by station license. No crossband contacts are allowed. Entry classifications are: single operator-single band (each band), single operator-multiband, and multi-operator multiband. Single operator entries cannot have more than one signal on the air at a time, while multi-operator stations cannot have more than one signal on each band at a time. General call is "CQ AA" for non-Asians and "CQ TEST" for Asians. Non-Asian stations contact only Asian stations.
EXCHANGE:
For OM stations: RS(T) and 2 digits indicating operator's age. For YL stations: RS(T) and ØØ.
SCORING FOR NON-ASIAN STATIONS:
Count 1 point per Asian contact. Multiplier is number of different Asian prefixes worked on each band. Contacts with KA stations are not eligible, since they are considered military stations and not amateur stations. Final score is sum of QSO points times the sum of the multipliers on each band.
AWARDS:
Various awards will be awarded the highest scorers in each category in each country and US call area, depending on the number of entries.
ENTRIES:
Submit a copy of your logs and a summary sheet no later than November 30, 1976, to: JARL, P.O. Box 377, Tokyo Central, Japan. Logs must show date and time in GMT, station worked, report sent and received, multipliers and points. Use a separate log for each band and include your callsign. Summary sheet should show name of contest, entry classification, callsign, operator class, country, address and name, site of station if mobile or portable, station details, comments, and signed declaration. Also, include a table showing number of QSOs, points and multipliers per band. At the bottom of the table show totals along with final score. Violation of the contest rules, false statement in report, or taking credit for excessive duplicate contacts may be cause for disqualification. Results will be announced about April, 1977. Include one IRC and an SASE with your logs to receive a copy of the results.
COUNTRIES LIST OF ASIA: A4, A51, A6, A7, A9, AP, BV, BY, CR9, EP, HL/HM, HS, HZ/7Z, JA/JE/JF/JG/JH/JI/JJ/JR, JD1 (Ogasawara Is.), JT, JY, OD5, S21, TA, UA/UK/UV/UW9-Ø, UD6/UK6C,D,K, UF6/UK6F,O,Q,V, UG6/UK6G, UH8/UK8H, UI8/UK8A-G,I,L,O,T-Z, UJ8/UK8J,R, UL7/UK7, UM8/UK8M,N, VS6, VS9M/8Q6, VU, VU (Andaman and Nicobar Is.), VU (Laccadive Is.), XU, XV, XW8, XZ, YA, YI, YK, ZC4/5B4, 1S (Spratly Is.), 4S7, 4W, 4X/4Z, 7O (S. Temen), 7O (Kamaran Is.), 8Z4, 9K2, 9M2 (W. Malaysia), 9N1, 9V1 (Singapore), (AbuAil).

TU-BORO FAST SCAN ATV CONTEST

On October 3, 1976, the Tu-Boro Radio Club will sponsor a fast scan ATV contest on 439.25 MHz. Any station working three or more Tu-Boro members will receive a certificate suitable for framing. Stations currently active on ATV who are Tu-Boro members are WB2TCC, W2LXC, WA2WAK, WB2KEK, W2JNU, and WA2NXB. All correspondence should go to: Tu-Boro Radio Club, 149-14 14th Avenue, Whitestone NY 11357. The time of the contest is from 9:00 am to 11:00 pm.

Continued on page 21

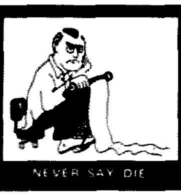

. . . de W2NSD/1

EDITORIAL BY WAYNE GREEN

from page 4

The fact is that it will permit you to get on the air . . . with low power . . . in a crowded band . . . using code only . . . usually with poor equipment which even an expert would quickly throw aside. No wonder such a small percentage of Novices stick it out.

Like it or not, darned few people get into amateur radio with the idea of making CW contacts. They want to talk on phone and they deeply resent CW as an abomination jammed down their throats. I suspect we would have ten times as many CW ops . . . and happy ones . . . if CW were optional, not required by law.

So what do I suggest? Well, when us doddering oldsters got into hamming, we started right out with 13-per and our first ticket permitted phone operation. We made it all okay and the percentage of increase of hams was better than it is today with the Novice starter system. I propose that a few clubs stop trying to con people into that Novice business and get them immediately into a General Class license. It'll take a little bit longer, but I think we'll have a lot more hams as a result.

How much longer will it take? I'd sure appreciate it if a few clubs would run some tests with their classes. I suspect that it won't take a lot longer to learn the code at 13 words per minute than 5. That seems impossible? Well, please remember that most people have been learning the code the worst possible way for many years . . . starting off slowly and then relearning it again and again one speed after another . . . each time having to train their brain to recognize the different sound patterns. The *73* code cassettes start right out with each character at 13 words per minute, right from the first introductory tape. From there it is not much more difficult to go immediately to the 13 per tape than it is to the 6 words per minute tape . . . each has all characters sent at 13 wpm.

Several fellows came up to me at Dayton and said that they had tried going directly to 13 per and had found little problem with it. They said that they had found it startling at first to only recognize a few characters, but that the rest of them quickly clicked into place, and before they knew it they were copying at 13 per. The *73* tape is so merciless that they could copy straight text at 15 per with solid copy . . . and the FCC 13 wpm test sounded slow to them.

How about it fellows . . . let's try some General classes for beginners and see what happens . . . if it works we might just dump that Novice ticket entirely. I think we'll get a lot more enthusiastic hams out of it.

BETTER OPERATING

An article was submitted recently which made fun of the ham operator who makes long and repetitive transmissions. Talk about shooting fish in a rain barrel!

Since I don't think that making fun of the mentally retarded is fair game, I returned the article . . . but not without wishing that someone would come up with some good ideas on how to improve the quality of the average ham contact. As a major offender in this matter, I think I can speak with authority.

When I'm trying to drive and talk over the radio at the same time, both suffer . . . a lot. I don't think I'm unusual in this, judging from what I hear coming through over the repeaters. My friends credit me with being a wit . . . my detractors give me at least half that much credit . . . so when my wits (what there are of them) are further split by the demands of trying to control my car careening down the road, watch for fuzz, keep one ear on the CB for Smokey reports, and not totally ignore my passenger, I end up with a hemi-demi-semi-wit on the repeater. I am not alone.

Let's do what we can, in spite of the odds outlined above, to encourage better operating. In particular, there are four things that we can try and watch for in our own transmissions: excessive repetition, trite phrases, ham language, and an obvious lack of anything whatsoever to say.

Excessive repetition encompasses such boring things as repeating anything twice when you know your signal is solid copy. You know how you hate it when someone keeps telling you he is going to sign off. Take a big clue from the CBers on this one . . . when they say they are gone, they are really gone. Some ham contacts go through a dozen or more final transmissions.

There are a few ops who are unable to call a spade a spade . . . they have to call it a digging implement. They don't go to the doctor, but to the sawbones. They modulate the mattress, see you down the log (what log?), and in general speak a very weird language, little of which is clever or original. Many of us get into the habit of using ham terms a lot more than is necessary, forgetting that there may be a bunch of non-hams listening to us who perhaps don't know our codes. It is not much more difficult to say we are going to change channels than to say we are going to QSY. Or that we are going to shut down instead of QRT . . . etc. You get the picture.

A little listening to the CB channels may convince you of the sterling qualities of the English language. You have to learn a whole new vocabulary to talk CB . . . kind of like learning Swahili (and not much more difficult). The CB Swahili is just an exaggeration of the bad habits we've gotten into on amateur radio.

Just a thought.

CLUB PROGRAM

One of the most important factors in holding a ham club together is an interesting program. Experienced club officers know that one of the surest ways to kill off a club is to permit business meetings to take up too much of the meeting time . . . members get all wrapped up in the hassle over whether to paint the clubhouse or not, but somehow they forget to come to meetings after that. Club members want to be entertained, and if you don't provide the entertainment, television will.

A talk by a manufacturer on his ham product is one of the best drawing cards for club programs. Unfortunately, these chaps are spread out all over the country, and there are seldom more than one or two available in any one area, so clubs quickly run out of ham-oriented speakers.

In order to make talks by ham manufacturers available to clubs and thus perk up the club programs, I am going to get them to put their talks on tape and I will send you a cassette tape of their talks. Once I get this thing going, I hope to have one or two half hour tapes available every month . . . and at no cost to you. The manufacturer is trying to sell you his products, so we'll let him foot the bill.

It is terribly difficult to get much information about new products. The ads don't tell very much . . . and neither do most of the product reviews. The one person who really knows the product is the manufacturer, and he is obviously the one we want to hear talk about his product. I will caution him that self-serving puffery will be transparent, and that if he really wants to get our confidence he'd better level with us. Since we can logically expect more than a little bias I suspect that a clever manufacturer will bend over backwards to make sure his talk has credibility.

If your club would like to get these tapes, all you have to do is get your secretary to send a card or letter letting me know how often you meet (like monthly), approximately how many attend meetings (in case there are flyers to go with the talks), the name of the club, and the address to which to send the cassettes and flyers (if any). You might let me know if you would prefer one half hour talk or two. Send that to *73* Club Programs, Peterborough NH 03458.

A CB AD IN 73? WHAT NEXT?

There are a lot of good reasons why every one of us should be active on CB these days, and darned few good reasons for avoiding CB. Yes, I know all about the bad language, the terrible things that have happened on CB . . . but I also know that much of that is past history. Another thing I know is that our own hands are not clean . . . we've had a bunch of the foulest language you can imagine jamming some of our service nets and locking up some of our repeaters. No, we can't come on as Mister Clean. You should see the mail I've gotten regarding the Eddy Palmer situation down in Tennessee!

We amateurs can do a lot of public service via our two meter repeaters and service nets, but by hooking into the biggest net of them all – CB – we have even more ears. I, for one, like to know where Smokey is lurking, but even without that benefit I wouldn't be without CB these days. Once you get off the truckers' (19) channel you can get into interesting and intelligent (at times) conversations with people who talk English. And if there are any road problems ahead, you will know about them in plenty of time to take evasive maneuvers. I managed to find a back way into a shopping center just before Christmas when the main roads leading into it were backed up for miles. I've avoided a lot of traffic snarls and accident scenes by keeping my CB set on channel 19. I've reported local accidents to the police via CB which otherwise I would have had to call in via long distance through repeaters.

But perhaps most important of all, I have a lot of fun telling CBers about amateur radio. I start talking with them as I drive along and soon they want me to stop and show them an HT with a touchtone pad on it or my two meter FM radio. They get all dazed at the ranges we consider normal on two meters, and when I tune in some DX for them on 20m they are almost stupified. Few of the really active CBers refuse to take the bait. They want to know about hamming; most of them have heard about it and they really want to know. Tell them. Get them into your club classes. You can't hook 'em if you aren't on there.

There are a lot of good CB rigs on the market and there are some real dogs. We're busy testing out as many as we can get here at *73* so we can let you know which seem to be okay. The other day, when I was visiting the FCC in Washington, they had just completed some tests of CB rigs in their labs and they were astounded at how dirty some of them were . . . putting out crud over a wide range of frequencies. I think you'll see some action from the FCC on this before long.

The CB gang almost got a bunch of extra channels. It was all set to go through. As I understand it, someone up at E. F. Johnson had his thinking cap on and wondered what would happen if two mobile rigs were on at the same time in close proximity and 455 kHz apart . . . wouldn't this raise

hell with the broadcast i-f channels of AM radios and CB sets? A few tests showed that this was indeed true, and the okaying of the band expansion was halted at the last minute, probably staving off a disaster of enormous proportions. We think we have intermod problems on two meters!

If any readers have good factual data on which CB rigs are the best, we're interested . . . write an article. We don't want to turn even a part of *73* into a CB magazine, but since hams are looked upon as communications experts, we do have a responsibility to let you know what is what. I don't want you to be in the position I was in the other day when a chap wandered into the *73* offices and wanted to know where he could find out what CB rig was good. I thought it over for a while and had to admit that I had no answer for him. The CB magazines are no help. Neither are any books I've seen. Hmmm. Let's get that info out where it can do some good.

NEW MAGAZINE SIZE BOOMERANGS

Let's take a short trip back through memory lane . . . just a year ago when *QST* announced the new size magazine which would save thousands of dollars in publishing costs. My answer was baloney — a larger magazine takes more paper and that means more cost. I wrote this at the time and got a lot of flack from brainwashed ARRL members who believed *QST*.

So here we are a year later and the proof is there for anyone who *can* see to see. *QST* has met the increased costs in two ways. One, they've shrunk considerably in the number of pages . . . it was 34% thicker last year. Secondly, they've gone from about 30% ads to 50% advertising! Last year they had 85% more pages devoted to other than advertising . . . 130 pages last year to about 70 this year!

When costs go up, a magazine has to either raise advertising rates or else run a higher percentage of advertising. *QST* has done *both*. The costs of publishing *73* have gone up with the increase in size, just as I said they would . . . from about $36,000 per month last year to $56,000 a month this year. We've increased our ad rates and kept the percentage of advertising unchanged from last year.

I predicted that the costs of publishing the ham magazines would go up and that it would be the readers who would pay . . . through higher prices for ham gear which would result from the higher ad rates. Just you watch the prices of ham gear this summer and fall and then tell me that I was wrong. I hate being wrong.

MAKE A BUNDLE

How would you like to make $50 to $300 a month for a couple days of work? With the increased interest in amateur radio and *73 Magazine* resulting from the CB explosion, there is a big need for *73* to be distributed on the newsstands. If you would like to become a *73* regional newsstand distributor you might be able to make a nice extra bit of money.

Distribution in the newsstand field is set up with regional wholesalers, each of which services a hundred or so newsstands. These chaps handle so many magazines that most of them don't want to be bothered with a new one . . . particularly one of such esoteric interest as *73*. They prefer to deal exclusively with national distributors so they get their magazines in large bunches and have just one set of forms to fill out for a large number of magazines.

After trying two different national distributors and finding ourselves fairly well convinced that this was a bad way to do business, we have cancelled our national distribution sales contracts and are working via local wholesalers exclusively.

If you would like to be considered as a local wholesaler, please drop our Marketing Manager Sherry Smythe a note and tell her what area you want to cover, how many newsstands you would service, and about how many copies you would like to start with. You only have to pay for sold copies, so you can't lose.

How do the economics work? You buy copies for 75¢ each and sell them to the newsstands for $1.00. They sell them for $1.50, making a 50% profit. You make 25¢ for each copy sold. Thus you make $25 for each hundred copies sold in your area. You have to go around once a month and deliver the new issues, pick up the unsold issues, and collect for those sold. It's fun and it's profitable. And who knows, once you have the route set up and your contacts, you might want to try handling a few more magazines . . . at least until your spare time is used up. The deliveries can be made evenings and Saturdays . . . records can be kept evenings. And who couldn't use a few hundred extra dollars a month?

Write Sherry Smythe, *73 Magazine*, Peterborough NH 03458.

WRITE AND GET RICH!

For years I've been bumbling along, vaguely aware of a problem, but not coming up with a solution. Now I think I've got a splendid plan which will help everyone involved.

The other day I was talking with a manufacturer. He was griping because I ran a picture of a competing product as an illustration in an article. What made the situation really bad for him was that we were running his ads and not those of the competitor. He was aggrieved . . . and I would have been too were I in his shoes.

My suggestion was that instead of hassling me about it, he should make sure that I had plenty of photos of his products on hand. I reminded him that I had visited his plant and asked that he send pictures for just this use, but had not yet gotten anything. I further pointed out that since his product was a most interesting one, he could do a lot worse than have a writer prepare an article or even a series of articles about the products he was making. These articles should discuss the design philosophy, the uses, the benefits to the user . . . and in general tell everything possible about the product.

The manufacturer liked the idea, but said he had no one on his staff who could write these articles . . . and didn't even know anyone who could do the job . . . who would I suggest? I pulled a name out of the hat and he is going to contact the writer. Hopefully the result will be a very interesting series of articles . . . absolutely pure gold sales literature in reprints . . . and a writer who has made a big bundle writing on contract for the firm.

Though I have more than enough to do without getting into the manufacturer-writer marriage business, I will be glad to help writers contact firms who need material prepared. And vice versa.

There is no question that such articles are wanted . . . every time I do get one, the reader response is most gratifying. The big problem is getting the articles written.

If you are a *73* writer you might take a good look at any relatively new piece of equipment you've been using and get in touch with the manufacturer to see if he might be interested in underwriting an article on the unit for submission to *73*. I don't guarantee publication, naturally, but you know that I am hot for such material and if it is at all usable you won't be able to keep me from grabbing it.

One word of warning to both writers and manufacturers . . . no one truly believes that any equipment is perfect, so be sure to emphasize the good points and mention the drawbacks . . . it will make for a lot more reader credibility and, in the end, result in a lot more sales.

There is a great temptation to try and shush problems . . . like the early Clegg miseries with LEDs burning out. They burnt out one right after the other, and after a few days you couldn't tell what frequency was being read out. Sure, they solved the problem . . . but they missed a lot of PR and attention by not making a big deal out of the problem and the solution.

I think that a good writer could make a lot of money writing for the manufacturers. A big firm should be able to pay $500 to $1000 for a good article, and a writer can easily turn out a dozen of those a year in his spare time. Even at today's inflated costs that is a nice bit of change.

The field is not restricted to ham gear either . . . I know that I'm interested in material on equipment of interest to the ham, the experimenter, the computer hobbyist, and even the CBer. We've got some CB plans ahead and want to get ready for that, whether it be a series of books or a magazine.

FCC'S 5 WPM!

I've mentioned this before, but a lot of amateurs have missed it . . . and a letter from a reader in Kentucky brought it to mind . . . when you go to the FCC to take a 5 wpm test you'd better be able to copy each character at 13 wpm with the spacing between characters at 5 wpm. This is the way you are taught on the *73* code tapes, by the way, so if you find yourself called down to the candy factory for a retest, get hot with the #6 cassette.

THAT FEBRUARY COVER

Here's a picture of a Star Trek communicator as built by Ron Dodge WB0IHR of St. Paul MN and on demo by Jane Skeil. Ron and Jane were using it to beam down to the Dayton Hamvention (photo by W2NSD/8).

New Products

YAESU FT–221
2M TRANSCEIVER
Fred Goldstein WA1WDS

What's more fun than a barrel of crystals, more powerful than a smoking HT, more useful than a box of 6146s, and has a handle? If you're interested in getting on two meters in style, the Yaesu FT-221 will fill the bill handily.

The FT-221 has complete band coverage, VFO or crystal-controlled, on FM, SSB, CW and even AM. Output on SSB is 20 W PEP; on FM and CW it's 10-14 W. It's easy to operate, since all circuits are either internally compensated by the band switch or broadbanded. Full output is thus achieved across the whole band, which is tuned as eight 500 kHz segments.

Until you try it, you might think eight band segments is too many. But virtually all SSB is within 25 kHz or so of 144.110 and 145.025, except for the OSCAR segment. Repeaters are tuned only from 146.5 to 147.5, so you can switch from 146.79 to 147.30 without having to tune the dial more than 10 kHz. 600 kHz offset is automatically provided on those two segments. A reverse switch inverts the operation, for California plan split-splits or just working inverted on a repeater pair. That's the best tool for catching Touchtone Tommies if you have a beam.

Among the other handy features are the front panel mike gain control and the built-in tone burst. Construction is modular, using computer cards that come out for repair or maintenance. The internal adjustments are right on top of the cards, for easy access. And the dial drive is a smooth dual-speed unit.

The circuitry shows that good engineering went into the rig. The receiver uses an FET preamp and mixer, feeding a 10.7 MHz crystal filter. For SSB, a noise blanking gate (very effective if you operate SSB mobile) precedes a sharp lattice filter and the i-f strip. The FM i-f is separate, using a second conversion to 455 kHz and a Murata F filter. Selectivity is excellent. The s-meter is fixed to the SSB i-f, so a carrier reading indicates that you're tuned into the repeater. The meter can also be switched into a center-tune position. On transmit, it indicates relative output.

Local injection is provided via a phase locked loop that mixes the crystal band segment oscillator with the VFO or channel crystal (8 MHz). The VFO is not multiplied, so there is very little drift. The PLL keeps the spurs and images down better than a bandpass mixer.

The result of all this circuitry is top performance. The receiver hears only what it's supposed to hear, and hears it well. The transmitter sounds fine. Most 2 meter radios are prone to intermod, so I took the FT-221 to the top of Pack Monadnock – a heavy duty rf zone. While the Brand X radio in the car was deluged by garbage all over the band, the Yaesu was clean as a whistle. I had a nice chat on SSB with a station in New Jersey, which gave me an S9 report. Not bad for twenty Watts and a five element hilltopper beam. Unfortunately, there's not much SSB activity yet up here in the sticks, so it helps to make skeds. But that should change soon as more people discover that SSB is at least as good on VHF as it is on the "dc bands" – especially with radios as good as the FT-221.

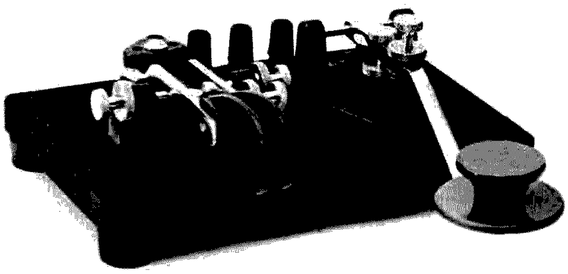

STRAIGHT KEY OR DUAL LEVER PADDLE?

The choice is yours with Ham Radio Center's Model HK4. Here's a double threat with both weight enough to stay put and velvet smooth action. All plastic parts are of high impact styrene, and the red plastic and black crackle finish really catch the eye. The color-coded binding posts make the unit idiot-proof. It's a joy to operate, with provision on the paddle for wide or close finger spacing. At $44.95, delivered, it's indeed that rarity in today's market – a bargain. *Ham Radio Center, Box 28271, St. Louis, MO 63132.*

STANDARD HORIZON 29
(see page 65)
Wayne Green W2NSD/1

Normally I wouldn't rush into *73 Magazine* with a big write-up on a new CB rig . . . but these are not normal times.

It should come as no great surprise to *73* readers that I've been active on CB for a couple of years now . . . even to the extent of getting a license, so you *know* I must be quite active! During all this time I've been using a very well-known brand of CB rig . . . one with an excellent reputation.

One of the bigger favors done to me recently was the theft of this fine rig. I came back from the computer convention in Albuquerque to find my car at the Boston airport sitting unlocked and my CB rig missing. Thank heavens I'd removed the IC-230 before parking! My stereo tape deck was still there . . . just the CB gone. Zounds! That'll teach me not to have an alarm on my car. I don't need it up in New Hampshire, but down in Boston is something else.

The old rig was a beaut . . . but the noise generated by my car . . . Datsun 280Z . . . was beyond belief and limited my reception to about a mile under good conditions. I found that when I wanted to hear much further than that, I had to speed up the car, turn off the engine, cut off the squelch, and turn up the volume control. Then, when the car slowed down enough to cause a traffic backup, I had to stop trying to hear and turn back the volume, turn up the squelch, and settle for local signals again. You wouldn't believe what a royal pain it was to try and find out about traffic conditions under those restrictions.

Then along came the Standard Horizon 29 rig . . . magically it fit right into the bracket still left hanging under the dash. Between the automatic noise limiter and the noise blanker, my threshing machine car noise was so gentled that I could hear the weak ones out for miles! It brought new life to old Snidely Whiplash, I'll tell you.

And you know how crumby some of the CB rigs sound? Well, I've listened on the other end to my Horizon 29 and it sounds as clear and crisp as you could ask . . . beautiful. It has a gain control built right into the microphone.

The public address part of the unit puts out 10 Watts, enough to be heard by motorists in front of you if you have any well-chosen comments to make . . . perhaps to warn them of a dangling exhaust system, burnt out lights, flat tires . . . or perhaps a helpful comment on their driving skills. It also allows you to monitor your CB when you are out of the car.

The Horizon 29 has one other feature you don't usually find on the smaller CB rigs . . . a clarifier tuning control. This will permit you to tune in any slightly off channel signals and bring them in clearly. It won't help off color channels. This only moves the received frequency, not the transmitter.

While many CB units still use crystals for frequency generation, the Horizon 29 is digitally synthesized, using a phased lock loop (now don't you wish you'd read the articles on PLL?).

About the only serious problem with CB these days is the tendency to get hung up on it and the fun of talking briefly with passing motorists. The other night I was perking along the Connecticut Turnpike, keeping one ear on CB for traffic warnings and having a very pleasant contact over a local 2m repeater when someone came on the channel and was extremely abusive . . . fortunately he didn't identify himself. I retreated to CB and struck up a conversation with someone somewhere ahead of me who was into car rallies. I didn't get back on 2m for an hour . . . and well out of range of WA1ABR.

CB isn't hamming, for the most part . . . it's different . . . and I wouldn't be without either service. I do manage to get in a lot of PR for hamming with CBers . . . because they are interested. Millions of people are just discovering two-way radio and the possibilities for fun it holds . . . the more we can encourage them, the better.

One more thing. While the Horizon 29 allows me to hear a lot further than before, I still have a lot of garbage generated by the 280Z. I'd sure appreciate hearing from anyone who has been able to clean up one of these mobile noise generators.

NEW MACHINE LANGUAGE MANUAL

Scelbi Computer Consulting, Inc., Milford CT, has just published and released a detailed new manual, *Machine Language Programming for the "8008" and Similar Microcomputers.*

According to the authors, this text is an easy-to-read, 170-page basic manual needed to develop today's machine language programs. The illustrated manual covers such areas as a detailed presentation of "8008" codes, flow charts, mapping, a floating-point package, and basic programs, including loops, counters and masks.

Further, there are sections on multiple-precision arithmetic, debugging, organizing tables, editing and assembling, mathematical operations, I/O, real-time programming, maximizing memories plus more. It has been said that the floating-point arithmetic package is worth the price of the manual alone.

Copies of *Machine Language Programming for the "8008" and Similar Microcomputers* are available by sending \$19.95 ppd (foreign orders, add \$6.00), or using Master Charge, to Scelbi Computer Consulting, Inc., 1322 Rear Boston Post Road, Milford CT 06460.

ALPHANUMERIC TRANSFER SHEET

There is no longer any pen and ink work needed to produce sharp component identifications. Now you can just rub off the designations you need from Trumbull's alphanumeric transfer sheet.

There is no need to hunt from sheet to sheet to match up an alpha designation with a numeric designation. All commonly used components are printed arranged in a/n series (R1, R2, R3 . . . R51, C1, C2, C3 . . . C30, etc.).

Multiple series of each of the above designations are available in each set. Lesser used designations such as CR, J, K, L, P, S, T, TB, TP are in each set but must be used with the multiple numeric series (which are also in the set).

To use, just place your drawing over a hard surface and position the designation. Transfer the designation by rubbing the sheet with a round stylus, such as the cap found on some ballpoint pens. After transfer, cover the pattern with the burnishing sheet and rub again to smooth the pattern down and activate the adhesive.

Two sheets, each containing a complete set of designations, are available for only *\$1.25*. Order AN1X from Trumbull, 833 Balra Drive, El Cerrito CA 94530.

ELECTRONIC KEYER

Palomar Engineers has introduced a new IC keyer that takes less space on your operating table than the old semi-automatic mechanical key.

The new keyer sends semi-automatic, full automatic, self-completing, dot memory, iambic, and as a straight key. It has a built-in sidetone oscillator and speaker, volume and speed controls, automatic/semi-automatic switch, weight adjustment and battery holder. Any desired speed from 5 to 50 wpm can be selected while you send. The keyer is easy to learn and easy to use.

The IC keyer will key any transmitter, whether grid-block, cathode-keyed or plate-keyed, up to 500 volts and up to one ampere keyed current. Keying contacts are silver, and withstand heavy surge currents and voltage spikes.

The built-in paddle is fully adjustable for spacing and tension. A die cast metal case provides full rf shielding.

The clip-in 9 V transistor battery will power the keyer for about 75 hours of normal operating, making the keyer ideal for portable operation. At the home station, a lantern battery will last for about two years.

The keyer sells for \$87.50 postpaid in the U.S. and Canada. California residents should add sales tax. To order, or for free brochure, write to Palomar Engineers, P.O. Box 455, Escondido CA 92025.

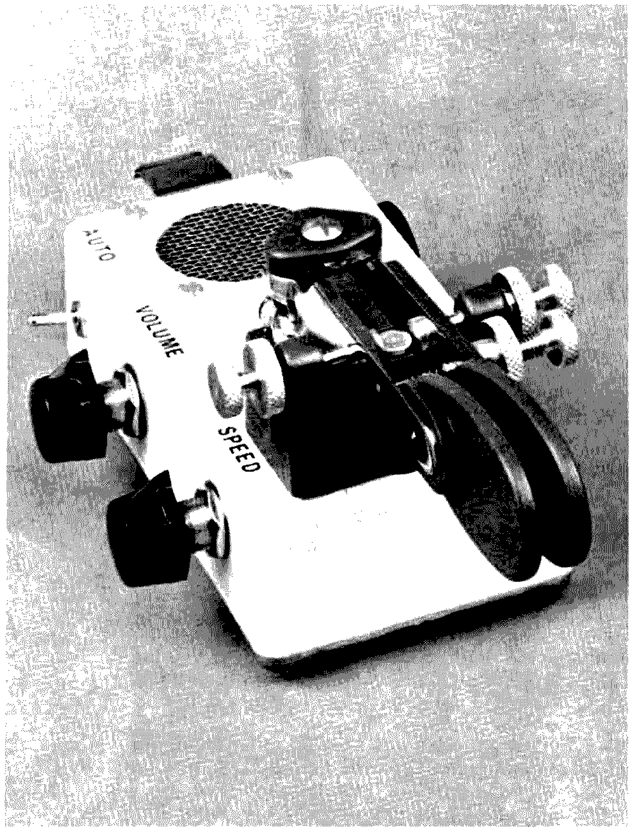

Looking West

Bill Pasternak WA6ITF
14725 Titus St. #4
Panorama City CA 91402

"Looking West" is heading east once again for our yearly visit to the homeland and, oh yes, to the Dayton Hamvention. While back there, we hope to have a chance to meet with some of those responsible for the new New York area "Tri-State Repeater Council" and thereby bring you some information as to how they got going and what their plans are for the future. In the meantime, the following release sent to us by Steve Mendelson WA2DHF will probably be of interest to you.

"On December 6, 1975, a formation meeting was held at Rye, New York with ARRL Hudson Division Director Stan Zack K2SJO as the host. Owners/operators from over 100 repeaters were present and agreed on the need for a repeater council to coordinate growth and negotiate disputes in the metropolitan New York, Southern Connecticut and Northern New Jersey area. The name chosen was the Tri-State Repeater Council. An interim board was chosen with Dave Minott WA2EXP President, Derwin Stevens WA2DHA Vice President, Steve Mendelson WA2DHF Secretary, and Sid Lieberman WA2FXB Treasurer. Directors were then chosen by caucus method with the group breaking up into telephone area code divisions.

"An executive meeting followed in the middle of March and a constitution was drawn up to be presented to the membership at the March 20, 1976 regular membership meeting. At that meeting, the board and officers were made permanent, and a 450 MHz band plan was presented. The band plan would have repeaters operating on 100 kHz channels and 50 kHz channels going high in/low out, while allowing repeaters operating on the 25 kHz channels to go either high or low in. As most of the repeaters in the area are low in now, it would allow them to slide down to a 25 kHz channel and cause almost no inconvenience to users now on these systems. This will also allow repeaters in the area to agree with the ARRL 450 MHz band plan, and take that plan one step further with the 25 kHz option. As you know, it is impossible to run a 450 MHz system in the New York City area without a vast amount of desense due to the commercial repeaters coming out low, and the amount of white noise generated by the dense rf population of the city.

"The Council approved the plan and constitution and went on to set up committees to operate within the Council and, as with all organizations, set up a minimal dues structure. The Council welcomes all area owners/operators, and has already served as a means of solving the problems that are generated by operating in a high rf environment. The Council also serves as an informal setting for owners to get together and enhance each other's technical abilities.

"Those interested in applying for membership should write to: TSARC, PO Box 402, Amityville, New York 11701 for information. Or, if in the tri-state area, contact one of the officers of the Council. Our structure also makes provision for membership of those waiting for their repeater license. To those who would want to put up a repeater in the tri-state area, they are requested to contact Duke Harrison K2QPF who has agreed to continue his fantastic job of frequency coordination for the Council."

Speaking for myself, and as one who was deeply involved in that area's "repeater scene" but a few short years ago, I truly welcome the establishment of this new organization. If only it had existed in my time. I have known both Dave and Steve for a long time and sincerely feel that they are the type of technologically competent people to provide leadership — and I wish them and TSARC all the best in coming years. I also wish to thank them for choosing "Looking West" to make their first major national announcement about the formation of TSARC. I consider this an honor.

Now, back home. I had promised to begin covering the WR6ABB/WR6AFR problem and had set the guidelines last month as to how it will be handled due to my involvement with one of the two organizations as a control station for WR6ABB and member of the PARC Executive Board. (See June "LW" for a more detailed explanation.) In short order I received a request for a bit more time from one of the parties and from the SCRA since negotiations are in progress to solve this dilemma. Hence, without all the "answers in hand," I do not feel it would be fair to cover this topic right now, so you might say that I am "copping out" at the moment in deference to all parties involved. Hang tight and in the near future you will have the story in the most objective and credible way it can be presented.

Have you heard the "Dick Van Dyke for Amateur Radio" PSAs on your favorite radio station yet? Thanks to the hard work of Byron Paul WA6RNG, who made the arrangements, and the fine editing work done by Lenore and Bob Jensen, W6NAZ and W6VGQ respectively, these spots tell the public about many of the interesting aspects of amateur radio and the simple way that one can become part of the amateur radio community. If you either work at or own a radio station and can air these PSAs, then a note to Mr. Don Waters, ARRL Public Relations Director at Newington, should bring your station a copy. In the meantime, a hearty thank you to all involved in the project, especially Mr. Dick Van Dyke for making it a reality.

A massive education effort of any sort is only possible if you have the people to train. In the case of amateur radio, one of the best places to find possible candidates is within the ranks of citizens radio operators. To tackle this possibility, an excellent new film is now being produced by Dave Bell W6BVN of "Ham's Wide World" fame. The new film, unlike Dave's previous efforts, is specifically designed to be presented to audiences of citizens radio operators who are interested in taking that "next step" and need the proper incentive. Hosted and narrated by Roy Neal K6DUE of NBC News, the film compares both forms of radio interest as well as explaining the many diverse aspects of amateur radio itself. From Novice operation to DX to repeaters — all important aspects of our hobby are covered, and thanks to Dave's genius as a film maker, covered in a way most enjoyable as well as educational. As to when this film will be ready, I am not sure at this time; however, again a note to Don Waters in Newington can possibly bring more info. I had a chance to meet Don a few weeks ago at an amateur radio PR seminar here in LA, and I am most impressed with the gentleman. He is a true professional doing his best to publicize amateur radio for us. Really enjoyed meeting him. Oops — the title of Dave's film? "Getting Started in Amateur Radio."

While on this topic of PR and the like . . . you have probably noted on the "tube" the myriad of commercials to sell CB equipment. This note is directed to those manufacturers so involved in that advertising. Many of you are involved in the manufacture and distribution of amateur equipment as well as CB gear. With CB expansion, temporarily at least, at a standstill, and the "big city" log jam what it is, and with many of today's CBers looking for "something better," it might be prudent to consider advertising your amateur line in the same way and perhaps become directly involved in the training of amateur radio operators. If the Commission refuses any further CB expansion, then in many areas the CB market will be saturated within a few years. When that happens, new markets will be necessary and it is a smart businessman that looks to the future. A very lucrative market can easily be developed if you have the interest. At least it's worth a thought.

Finally this month, we wind up coverage of the Guatemalan disaster relief effort by amateurs here in the southland and nationwide. I suspect that Bella Russ TG9HS expressed the feelings of her people best in the following message sent via amateur radio to the people of the USA: "This is TG9HS and my message goes to the people of the United States of America. It has been one week since the world stopped; have you heard about it? Every second, every minute that goes by we wonder if we will make it to the next hour. What happened?

"One of the worst earthquakes in world history hit our nation. So far we have counted 20,000 people dead, 50,000 people wounded and 1,000,000 poor people homeless. When and if we ever finish counting, God knows how many will be dead. It all depends.

"We are praying to God to please stop shaking our area. We have a tremor on the average of one every five minutes. Still we are not giving up. We are not defeated. Our people are working hard to help each other. We know it will not be easy, but we will rebuild our country if it takes the last breath of all Guatemalans.

"America, you have felt our despair but you also sense our spirit. Today the people of the United States are showing the true colors of the name compassion. Your help, food, medicines, doctors, nurses and hospitals are arriving in Guatemala and you can ask your newsmen who have seen it. It is being used as fast as it arrives and is being used where it is most needed. And on behalf of my people and government, our sincere gratitude to all of you and especially to your wonderful amateur radio operators who have been in constant communication in our emergency."

It has now been several months since that message was sent from the people of Guatemala to the people of the United States. Still the rebuilding goes on, and one has only to listen to low band QSOs between TG stations and others to realize that amateur radio is still involved in this effort. Though the media gave us little in the way of public recognition, still we, the amateurs of the United States, were there when all else failed, and there to begin the massive aid effort. No, the White House never issued any official proclamation commending our effort, and no one has done a "TV Special" about amateur radio's role in helping the people of Guatemala. I guess we are just not big or important enough for anything like that.

One thing I do know, however. If any disaster ever befalls any nation, and if at any time the need arises to provide communication where all other methods fail, amateurs like you and me will be there, and we will do it again and again. When all is said and done, that's what amateur radio and its people are truly all about. Walk tall, guys and gals; being a "ham" is something to be proud of!

My special thanks to Doug McDowell K4SWJ/6 and Shelly Chelsey WB6KED of the Palisades Amateur Radio Club and Bill Orenstein KH6IAF/6 of CARS for making the tape available from which Bella's message was transcribed.

Continued on page 22

Autobiography of an Ancient Aviator

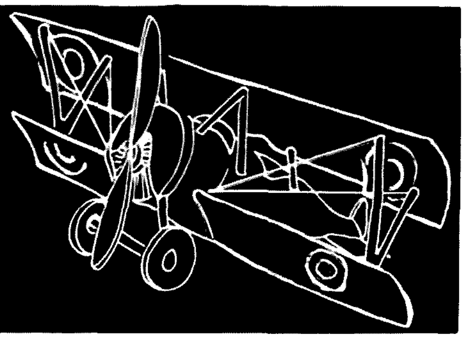

W. Sanger Green
1379 E. 15 Street
Brooklyn NY 11230

It was a bright, sunny morning in May, 1929. I arrived at Central Airport (Camden, N.J.) at eight o'clock, checked progress of the construction of the two new hangars, and went to my temporary office in the old hangar lean-to. I was looking over the morning mail when Bob Hewitt, manager of the Ludington Philadelphia Flying Service, phoned and asked if I could take a charter trip to Cincinnati that morning. I asked what the nature of the trip was, and he said they wanted to transport a man's body, his widow and two brothers. He proposed to use their Fairchild 71, so I said I'd check the weather and call him back. The Weather Bureau's forecast for the route was good, so I called Bob and told him to send the 71 over to Central from Philadelphia and I'd take the trip. He said he would have the party there by 9:30 and that the Philadelphia undertaker would make arrangements to have us met at Lunken Airport, Cincinnati, at about four that afternoon.

The party arrived at Central on schedule, but when I got a look at the basket the body was in I knew we weren't going to get it in the plane door. So I had them drive the hearse over to the far side of the field where there were no onlookers and I taxied the plane over. We had to take the body out of the basket, tie it in a seat, cover it, load the passengers and take off from there.

The flight was uneventful, weather C.A.V.U., and, after a brief refueling stop at Bettis Field, McKeesport, Pa., we arrived at Lunken Airport at 3:50 that afternoon.

Unloading at Cincinnati was not quite as discreet as our loading at Camden. I turned the ship so that the unloading door was away from spectators and the field personnel managed to keep photographers from taking pictures of the proceedings. Nevertheless, one of the Cincinnati papers carried a story about the "Flying Hearse."

That evening I had a sort of 1922 Cadet Class reunion with John Paul Riddle, "Jiggs" Huffman, and "Dubissary" Harris. They were then pilots on the Embry-Riddle Airline that operated a contract airmail route between Cincinnati and Chicago. In the morning I had a good tail wind, so I was back at Central in time for lunch.

The Jacobs Engine Co. was located at Central Airport, and from time to time I did some test flying for them. One test I'll always remember was when they had mounted a small engine of their own design in an Aeronca Scout single seater. Tom Carrol was their test pilot, but he weighed over 200 lbs. and couldn't get the ship off the ground. At that time I weighed around 140, so Al Jacobs asked me to try it. Early the next morning, when the air was its heaviest, I tried to take the ship off – but it would only get a few feet off the ground. So I taxied it back to the factory and shed all but my shorts. This time we got off and up to a ceiling of about 40 feet, so I made a very wide trip around the field and came in for a full power landing. I guess Al figured that his little engine was only good for lawn mowers. I never heard anything more about it.

My office in the new administration and station building at Central Airport had a large picture window facing the field. One morning I was working at my desk when I happened to notice a small Cessna coming in for a landing. Just as he came over the fence at the far side of the field I thought I saw a large object drop from his plane. He landed OK and taxied in to the line, killed his engine, and sauntered over to the hangar – giving no indication that anything had been amiss. I was so sure I had seen something drop that I went out and inspected the plane. Nothing was wrong there, so I picked up the pilot and drove to the far side of the field. It didn't take long to find a young man lying there unconscious. He seemed to be breathing all right and his pulse was OK, so I called an ambulance and had him moved to a local hospital. After a complete check, the hospital advised that he had no injuries that they could discover and that probably his "wind was knocked out" when he hit the ground.

How could an accident like this happen? Well, the pilot's story was that he had landed in a pasture about four miles away and, after visiting some friends nearby, was ready to take off for the short hop back to Central. Since the field was quite short, he had asked a couple of men to hold down his horizontal stabilizer (one on each side) until he had "revved" his engine up, and to turn loose when he waved his hand out of the left window. It seems that he opened his throttle wide and waved out of the window OK. The man on the left stabilizer saw it and jumped away, but the man on the right didn't see it and before he knew it the plane was gathering speed and the air pressure had him glued to the stabilizer. When the pilot came in to land he reduced his air speed enough to take most of the pressure off the man clinging to his stabilizer and allow him to fall to the ground. Not a broken bone. Not a bruise or abrasion. A miracle.

On a Saturday in May, 1931, I had a rather unique flying experience. They were having an air meet at the Philadelphia airport that afternoon, and one of the attractions was a "Sportsman's Pilot Race." It was open to anyone with an airplane. They had sixteen entries and, since there was such a difference between the planes involved, they decided to give each one a handicap. To do this they wanted to have each ship timed flying over the same one mile course at full throttle and piloted by a neutral qualified pilot. So they asked me if I would take on the job.

The procedure was for me to take each ship off from the Philadelphia Airport, make a wide circle at low altitude, fly low at full throttle over the timing course, come back around the field, and land. When I took off with one ship, the next to be tested was to have its engine started so that I'd lose no time in transferring from one ship to the next.

At this point I might say that the Philadelphia Airport in those days was little more than a flying field. It was small, had no runways, and the approaches left a lot to be desired. Anyway, we got the tests started promptly at 8:00 am, and from then until 12:30 I flew sixteen different airplanes over the course to qualify for their handicaps. The types varied from an Aeronca to a Taperwing Waco. Each had its own characteristics, but fortunately they all behaved well for me that day. It was an experience. The race went off on time that afternoon.

Next month, more happenings.

CONTESTS

from page 12

MT. RUSHMORE BICENTENNIAL STATION

The Black Hills A.R.C. will be operating a bicentennial special events station (NSØDAK) at Mt. Rushmore National Memorial, in the Black Hills of South Dakota, on July 3rd, 4th, and 5th. We hope to operate SSB and CW on General and Advanced portions of 80 through 10m and 2m FM. Special QSL cards will be available. Please QSL with SASE to KØCXL at 715 San Marco, Rapid City, SD 57701. Their authorization is good through September 6, so watch for them on other weekends and holidays.

SPECIAL "VIKING" LANDING COMMEMORATIVE

The Jet Propulsion Laboratory Amateur Radio Club (JPL-ARC) will be conducting one of its active participation programs for this year by making contacts with other amateurs all over the United States and many foreign countries in conjunction with the bicentennial project of landing on Mars.

The JPL-ARC will be active "on the air" with a special commemorative program during the Mars encounter by the Viking I and Viking II spacecraft.

Each of these spacecraft is comprised of two parts. One section is used to orbit Mars, while the second section is designed to land on the surface of Mars. Many scientific experiments will then be made, primarily to determine if there is or was any biological life on the planet.

The JPL-ARC will be using the special call of N6V (N = NASA, 6 = 1976, V = Viking), operating from Pasadena, Calif., and will operate on the following approximate frequencies: CW – 3530, 7030, 14030, 21030, 28030 kHz; SSB – 3810, 3930, 7230, 14225, 14325, 21360, 28630 kHz; Novice CW – 3730, 7130, 21130, 28130 kHz.

The exact time and dates of operation have not at present been determined because they are dependent upon the Viking spacecraft schedules. The closest approximation is: Viking I arrival at Mars, June 19, N6V on the air June 18 to 23; Viking I landing on Mars, July 4, N6V on the air July 3 to 18; Viking II arrival at Mars, Aug. 7, N6V on the air Aug. 6 to 12; Viking II landing on Mars, Sept. 4, N6V on the air Aug. 31 to Sept. 15. Viking status reports may be secured by calling (213) 354-4213.

Looking West

from page 18

SOUTHERN CALIFORNIA AMATEURS HONORED

On March 4, 1976, the Honorable Herschel Rosenthal, Assemblyman from California's 45th Assembly District, presented the following resolution to the Amateur Radio Community of Southern California:

RESOLUTION
Relative To Commending
The Radio Amateurs Of
Southern California

WHEREAS, The Amateur Radio Operators of California have provided important public services for more than 50 years to the people of the state, and are deserving of special recognition for their outstanding record of dedicated community service, and

WHEREAS, The Amateur Radio Operators of California and their American Radio Relay League provide vital emergency communications in times of natural disasters, such as fire, flood, and earthquake, and, in particular, the recent Guatemalan tragedy; and

WHEREAS, Inducing a constant strengthening of international friendship through their contacts with every country in the world, the Amateur Radio Operators, through their inventive and resourceful experimenting, led to the development of broadcast radio and its continued improvement; and

WHEREAS, They provide exemplary services in providing "phone patches," linking overseas servicemen with their stateside families; and

WHEREAS, The sophisticated Oscar satellites circling the globe make interpersonal contact by radio waves possible in remote areas, providing information for all occasions, including knowledge of space to school children, and emergency assistance to motorists, police, and stranded persons; and

WHEREAS, The study, training, and practice of the amateur radio operators has provided the state and country with a huge reservoir of technical skills for the armed forces; and the activity provides a useful pastime to many of the shut-ins and isolated individuals of the state; now, therefore, be it

RESOLVED BY ASSEMBLYMAN HERSCHEL ROSENTHAL, That the Amateur Radio Operators of Southern California be commended for their outstanding record of dedicated and highly effective service to their community, state, and nation; and be it further

RESOLVED, That a suitably prepared copy of this resolution be transmitted to the Radio Amateurs of Southern California.

Members Resolution No. 395
Dated: March 4, 1976
Signed: Honorable Herschel Rosenthal 45th Assembly District

On hand to accept this award on behalf of the entire area amateur radio community was Jay Holiday W6EJJ, ARRL Southwestern Division Vice Director, along with many of the amateurs who had participated in this area's mass communication aid effort for Guatemala (including Doug McDowell K4SWJ of the Palisades Amateur Radio Club, organizer of this aid effort).

ARRL Southwestern Division Vice Director Jay Holiday W6EJJ, left, accepts from Assemblyman Rosenthal proclamation honoring southern California amateurs. Photo by Robert R. Jensen W6VGQ.

Alexander MacLean WA2SUT, NNN0ZVB
18 Indian Spring Trail
Denville NJ 07834

How Do You Use ICs?

--fundamentals

Most of the articles dealing with integrated circuits (ICs) either explain the theory of internal electronic operation or show some complex use for the device to someone who is already familiar with ICs.

It is not necessary to have an understanding of how they work to begin using and enjoy working with ICs. What is needed is the nuts and bolts practical information on how to get started usually overlooked by the more advanced technical article.

The IC can be basically thought of as a miniaturized printed circuit (PC) board. It is a complete electronic circuit within its package, built to perform some specific function.

This is both the problem and the key to easily working with them. Instead of working with components and building a circuit with them, you are working with the complete circuit as a plug-in unit adapted to your purpose.

The cheapest and most obtainable IC surplus available is the digital type. This was designed for computer use. Amateurs use it two basic ways: as it was designed when they can use that particular IC function, and by externally manipulating it to perform some unrelated function that it was never designed for.

Many counters use digital ICs to count the same way a computer would. Other equipment takes the computer circuit and makes it work as an amplifier, product detector, oscillator, and so forth.

This article will try to answer some of the more obvious questions about how to start working with digital ICs and get usable results. The first question is:

How Do I Tell What These Devices Are?

An IC is named for the particular computer function it performs in a digital computer. Most of the time the name will not be of any value to the amateur, except to identify the device to be used. He will be using it in a different way for a different purpose than it was intended.

It also has a code number, as tubes and transistors do. There are a limited number of

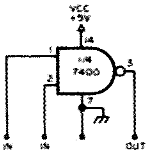

Fig. 1.

specific computer functions, but a variety of ways they may be packaged.

An IC package may contain only one actual circuit, or it may have a number of them inside. This is for computer building convenience. It may seem confusing at first that so many code numbers seem to be the same circuit, but they may be different combinations within the package.

An IC also belongs to a "logic family." This heading is usually given over the list of code numbers in the ads. This refers to the electronic means by which the circuit does its work.

The circuit function can be performed a number of ways electronically. While this is important for computer use, it is less so for amateur use. When you become more experienced, the need to become more selective about which logic family you use may arise – but not when you are starting out.

Where Do I Get More Specific Information?

Check the ads and send for the catalogs of surplus IC dealers. This will give you at least one number/name cross reference that you might need.

When you order, for a slight additional charge you can get the data sheets for the devices you order. If you plan to do a lot of work with ICs, there are several data books available on the common IC families (for about three dollars each).

Careful reading of IC articles will also give you quite a bit of information. One article may not give it all, but comparing several will yield something you can use.

With So Much To Choose From, What Do I Start With?

The important thing is to begin. Keep it simple. Some particular devices are standing out as most commonly used.

The family to start with is the TTL (transistor transistor logic) family, also referred to as T^2L. These are cheap, rugged and available.

Within this family there are two devices which are well known and easy to work with. They are the 7400 quadruple dual input NAND gate and the 7490 decade counter. Forget the names and look for the numbers. You may just see "7400 gate" and "7490 counter" in the ad.

What Can I Do With Them?

The 7400 is the heart of many IC oscillator circuits, and is often adapted to perform other common circuit functions. This is one area where the device is adapted to perform tasks it was not designed for.

The 7490 likes to divide

by two, five and ten. It is the heart of many dividing and counting circuits. This is a case of the device being used as it was designed.

One obvious use would be to combine the two and make a multiple output frequency standard such as 100 kHz, 10 kHz, 5 kHz or a custom output for a particular use.

By learning with the simple circuit you get the practical basics of the more complex dividing chains used in counters or other exotic gear.

These are basic circuits. The 7400 has also been adapted to perform many of the functions of a complete SSB generator, acting as oscillator, mixer, buffer and so forth. This makes it a good device with which to learn the basics of external circuit manipulation.

What Else Will I Need To Get Started?

Besides a few ICs to play with, you will also need a few basic items to start off with. These should be thought of as capital investments. You will use them over and over again as you work.

You will need a power supply. For digital ICs you need 5 V dc, preferably regulated. This is no problem and will be dealt with later.

You will need one of the IC breadboard matrices. For experimental circuits, there is no more practical way of working with them. Printed circuit board techniques are clumsy and don't lend themselves to quick changes. Individual sockets and components are much too fussy to work with conveniently.

You will also need a supply of small parts to use with the ICs. There are fewer used with an IC circuit than with tubes or transistors, and with careful buying they are much cheaper.

What Is It Going To Cost To Get Started?

The initial investment will be in the neighborhood of thirty-five to forty dollars, most of which is for non-expendable items used over and over again.

This compares favorably with what you would spend on a comparable breadboard setup for tubes or transistors if you started from scratch.

After the initial investment, the cost per circuit will be lower than with tubes. Careful planning of purchases and buying ahead at quantity prices can bring the cost way down.

The biggest expense will be the IC breadboard matrix. The Proto Board 100 at \$19.95 (plus postage) or the AP Superstrip at \$17.00 (plus postage) is probably the best investment.

Plenty of ready-built supplies, kits, and individual parts to build supplies are available surplus for between five and ten dollars.

As for the rest, five to ten dollars will buy a good supply of 7400s and 7490s, and a fistful of the small parts you will need to build a lot of the basic circuits.

The initial high cost will also be offset by the fact that, with the use of the breadboard matrix, you will be able to use the small parts over and over again without cutting the leads.

After the initial investment, the cost per additional experimental circuit will be much less than with tubes.

What Kind Of Power Supply Will I Need?

Digital ICs want 5 volts dc, preferably regulated. This is not hard to arrive at. It is much easier than with tube supplies.

While a complex piece of IC equipment might draw several Amps, for an experimental supply anything from 200 mA to an Amp will be satisfactory. Even a battery will run several ICs.

Linear ICs work from a wider range of voltages, usually in the 9-18 volt class, and there are some types of ICs (like differential amplifiers) which take two voltages – one plus, one minus – in that range. This sounds harder to do than it is, but start with the digital IC and the single supply.

What About Voltage Regulation?

Here is where you really get a break with ICs. A well regulated dc tube supply is quite an undertaking. With ICs, it's a breeze.

If you have a transistor-type bench supply in the 9-12 volt range, just add an IC regulator such as the LM309H (\$.75 to \$1.50, depending on the source) and your supply problem is solved.

These come in a variety of packages which look like familiar transistor types. They have three leads: one input, one output, and one ground. Can't get much simpler than that. They will handle about one Amp each.

What About Additional Filtering?

It is best to regulate the voltage right at the IC unit, which makes the IC regulators ideal. If the power supply is at a distance from the unit, it is best to bypass the input with .1 uF or more.

It is also advisable to bypass each IC package with .01 to .1 uF, to prevent interaction between ICs. This may not be needed experimentally and not all finished circuits will need or have it.

When you are ordering parts, include a few regulators and some disc capacitors. They are quite cheap.

Where Does The Power Go?

Many partial schematics are ambiguous about some of the IC connections. As with tube circuits that don't show the filament circuit, assuming that you know where it goes, the IC circuits use a form of shorthand.

Most ICs have a pin connection for the source voltage (Vcc) and a ground return for the other leg of the voltage. Many times this is just not shown.

With a multisection IC, there is still just the one Vcc input which feeds all the sections.

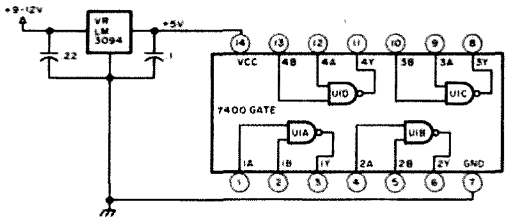

Fig. 2.

How Do I Read The Schematic?

Reading IC schematics is easy once you know how. Two systems are used. The first is to use the actual computer circuit function schematic symbol. This is often used when a multisection IC is broken up to perform several functions.

The important thing to remember is that the computer symbol is only used for convenience and usually has no computer meaning in the circuit.

The numbers on the pins refer to the pin numbers of the complete IC package. An example is shown in Fig. 1, which is one section of the 7400 with the pin numbers shown. The other three sections would be drawn the same way, with the correct pin numbers for each.

Often the entire IC is shown as a rectangle with the pin numbers on it, making it look like a large rectangular tube socket. The important thing here is that, unlike tube sockets, the IC pins are counted from the top of the case. Pin one is usually located by a mark.

Since most ICs are used with printed circuit boards, most of the other parts are top mounted; thus, the pins are shown from the top of the device.

Fig. 2 shows the complete 7400 IC package with the four sections drawn inside and the pins numbered. Also shown are the Vcc pin, common pin, and the associated bypass and voltage regulator, for basic recognition of the complete unit.

Can I Use My Junk Box Parts With ICs?

For outboard things like power supplies, switches, chassis, and chassis mounted parts, you probably can. For the parts directly connected to the IC, it is unlikely. They will be too big to fit conveniently and the leads may be too thick to use with the IC matrix without damage.

Considering the low cost of miniature surplus IC components and the convenience of using them, this is no problem. Use what you can of what you have. The little parts are cheap.

Where Do I Find Circuits?

Basic individual circuits are now common in most of the magazines. The larger articles may have what you need as part of another device which you might not want all of.

Can I Adapt Circuits From Other Pieces Of Equipment?

Very often you can. Unlike tubes, ICs are designed to be building blocks. The ICs in a family are designed to interface with each other.

Often it is possible to isolate the IC and its external circuit components that you want, and use it in another project without serious modifications.

How Are IC Circuits Coupled?

The two most common methods of coupling are direct coupling, where one output pin of an IC goes directly to the input pin of the next IC, and capacitor coupling. This makes it very simple most of the time.

What About Unused Leads Or Sections?

There is no hard and fast rule. Many ICs have such high gain that a floating input pin or section can cause instability problems. There are several ways of dealing with this.

One of the safest general methods is to return all unused input leads to the Vcc pin through a 1000 Ohm resistor. It is not necessary to use separate resistors for each lead. All leads from the IC can be returned through the same resistor.

Look at similar IC schematics. Sometimes the lead will be left floating or will be grounded. With grounding, some ICs will draw too much current. A milliammeter in the Vcc line will show you what the current is doing.

Transistors Are Easily Damaged; What About ICs?

ICs are quite rugged. Manv problems are simplified because they are matched to be interconnected. The most critical voltage is the Vcc voltage. There is a very small range above and below this in which ICs will work properly without damage. Using the small IC regulators will take care of this.

The next thing to watch is that they aren't overdriven. If you are using ICs with each other, this is unlikely, but if you are using an external drive voltage it may cause damage – the same as overdriving a transistor.

Don't let that scare you. It is not too common. They are quite rugged compared to transistors and they are very cheap. At 20¢ or less for a 7400, you can blow out quite a few learning and never feel it.

What About Using Other ICs?

The 7400 and the 7490 were chosen here because they are commonly used and information is readily available. There are plenty of others which can be used.

The basic oscillator circuit uses two gate sections. There are other computer gates which will also work. If you happen to have a stray IC gate type which is not a 7400, try it in the same type of circuit. It may work and it won't hurt to try.

Check through the IC articles and keep a file of the types of ICs used. The next most commonly used will show up that way.

What About Linear Devices?

Once you have gotten past the IC hurdle and have worked a bit with the digital type, you can begin to expand. As the prices come down, it becomes attractive to try the linear devices.

The regulator ICs you will be using are linear devices. The others which you might be interested in are the types that perform some radio or other desirable amateur function without the need for external fudging. They are

IC SHOPPING LIST

Power Supply

5 volt regulated or 9-12 volt transistor type
9 volt transistor radio type battery

Matrix

Protoboard 100 (@ $19.50 + postage)
AP Superstrip (@ $17.00 + postage)
Protoboard 6 (@ $15.95 + postage)

IC Types

TTL digital 7400 series
7400 gate, 7490 counter
Linear LM309H, K or equiv. 5 volt regulator

Capacitors

Supply of disc type 25-50 V
0.1 uF, 0.01 uF

Resistors

1/4 Watt carbon. Most used values for ICs listed: 150, 220, 330, 470, 560, 680, 1k, 1.8k, 2.2k (Available in sets quite cheaply with more values in set)

Hookup Wire

#22 or smaller solid

(Add other items needed for specific projects desired, in order to make up minimum order requirements, or get price break on quantity ordered.)

internally designed to perform that specific task.

One of the simplest and most available, directly applicable to many uses, would be the audio type IC. These range from dual stereo preamps to complete preamp/power amp ICs that are well within the range of what is used in communications work.

Working up from that, there are the ICs designed for commercial use which are complete i-f strips or complete subsections of communications type receivers. Some are specialized for FM or TV.

As these find their way into common amateur use, they may well put the design of simple but effective equipment back in the range of something which can be done with limited means.

Many of them will work with the IC matrix and a standard transistor-type supply. (5 volts is rather lean for the linear devices.) There are some that will not fit into the standard IC matrix, being designed for direct PC board use.

The thing to look for is the standard DIP (Dual Inline Package) configuration. Most of the ads will tell you if it is an unusual construction. Many of the audio power types have heat sink tabs. You can still use them, but not as easily as using the matrix.

What Am I Waiting For?

I don't know. What have you got to lose? Even if you blow out a few ICs while learning, they can be replaced for less than a buck. The initial investment is one of the cheapest available in amateur radio, when viewed in terms of the fun you will eventually have.

Set aside a little something each week and soon you'll have enough for the power supply, breadboard matrix, and a handful of ICs and parts. After that it should be downhill all the way. ■

Tracking the Hamburglar

KIDNAPPED: Drake TR-22 with crystals for 34-94, 94-94, 16-76, 04-64, 64-64, 88 receive. Texas D/L no. 4472525 on chassis. Jack Van-Natta WB5DYE, Tulsa OK. Phone (918) 627-3738.

ABDUCTED: Regency HR2A s/n 04-10422. Crystalled for 94/94, 34/94, 16/76, 52/52. Has bracket attached and cigarette lighter plug on power cord. Stolen from Don Billings WØGOH, 2838 N. Prospect St., Colorado Springs CO 80907, phone 303-636-1661.

FILCHED: Motorola two freq., control head, Motorola T-power mike, Moto. speaker, 16 button TT pad with light, mounted in Bud Box. Stolen from Jim Best WAØRZI, 1923 Alpine Drive, Colorado Springs CO 80907, phone 303-471-1486.

HIJACKED: Regency HR2B, s/n unknown. Crystalled for 34/94, 34/34, 16/76, 19/79, 22/82, 28/88, 88/88, 145.80/80, 58/58, 25/85. Stolen from Glenda Butler WBØOCH, 1509 E. 12th St., Pueblo CO 81001, phone 303-544-7777.

STOLEN: Atlas 210X xcvr s/n TH3214 with Lafayette mobile mike modified with 3 conductor ¼" diam. plug. Does not have dc power cord or ac supply. Also Lafayette HA-146 2 mtr xcvr s/n 1111 with mike, power cord and the following xtals: 52-52, 16-76, 76-76, 19-79, 22-82, 34-94, 94-94, and 147-69-09. If any info call collect (213) 374-8528. Les Goddard WB6URL, 2121 Clark Lane, Redondo Beach CA 90278.

PLUNDERED: EBC 144Jr., s/n 50108, synthesized rig. Stolen from Dick Sucher WAØZLY, 27 Leaming Road, Colorado Springs CO 80906, phone 303-471-1696.

LOOTED: Kenwood TS520 s/n 140579, engraved WA7WDC, and an Icom 230 s/n 2405651 also engraved WA7WDC. In addition about $7,000 worth of tools and test equipment. If anyone has any information to the recovery of the this equipment please notify the Phoenix City Police. G. M. Chinn WA7WDC, 906 E. Broadway, Phoenix AZ 85040.

ROBBED: Genave GTX 200, s/n 22-03, ss number inside 031-28-9354. Crystalled for 157.63-03, 147.06, 156.37-97, 34-94, 94-94 and MARS frequency. BNC on back for duplex operation. Extra relay inside for sw. mike and motor control head; early vintage set. Stolen from Gus McKinney WBØOFR, 807 Holmes Drive, Colorado Springs CO 80909, phone 303-473-1397.

HIJACKED: Regency HR-2, s/n 04-02604 with nicad battery pack attached, s/n 7157; with microphone. Rig had modifications for Topeka preamp and extra 6 channel crystal deck. Stolen from my car parked at Ramada Inn, 1900 Fort Myer Drive, Arlington, Virginia, night of March 31, 1976. If you have any information on this equipment, please contact: A. D. Abercrombie W2GJS, 1002 Merrymount N., Turnersville NJ 08012, (609) 227-1383.

STOLEN: FM-27B 2 meter, stolen from car. Has 410-30-6102 engraved on back and side. Contact Allen Eskind W4ZLW, 6104 Hickory Valley Rd., Nashville TN 37205.

LIFTED: Drake TR22 s/n 640995 was stolen from my car located in the parking lot at 2121 East 63rd Street, Kansas City MO between 8 am and 11 am CST on Thursday, April 8, 1976. The radio was marked on the chassis with my Social Security number and amateur radio call. Anyone with information concerning this radio is asked to contact the Kansas City MO Police Department (816) 842-6525 or KØIDJ.

TAKEN: Drake Model ML-2, 12 channel all xtaled, serial no. 11239. Touch Tone pad attached to top. Call K2YKE attached to side and marked several places inside. Stolen from my car in Buffalo, New York April 9th. Ken Haas, 243 Crosby Blvd., Buffalo, New York 14226. Phone 716-834-4083.

RIPPED OFF: Heath HW 202, series 00316 transceiver. Modified: BNC antenna connector, scanner with LEDs over top (extra) barswitch. Three switches to left not connected. Right switch turns scanner on/off. Wires were cut at back panel. Contact Dick Ellis W5YCK, 104 West Avenue A, Alpine TX 79830, phone 915-837-3728.

PILFERED: Regency HR2, s/n unknown. Crystalled for 34/94, 17/67, 25/85, 88/88, has owner's name inside. Stolen from Dwane Barber WAØWWO, RFD 3 Box 353, Greeley CO 80631.

MISAPPROPRIATED: Icom IC22A, s/n 3401802. Crystalled for 94/94, 34/94, 22/82, 28/88, 52/52, 16/76, 37/97, 87/27, 19/79. Call is engraved on back, accessory plug wired for TT, PTT, and 455 kHz output. Stolen from Bill Croghan WBØKSW, 1030 W. Colorado, Colorado Springs CO 80905, phone 303-471-7504.

TAKEN: Regency HR-2A, s/n 04-07989 taken from car in Harrisburg PA. K3NVO 495-38-8556 engraved on chassis. Has scanner board mounted over receive crystals and four red LEDs mounted vertically on left front panel for channels one through four. Call or contact Ronald Kaullen K3NVO, 6326 Blue Flag Ave., Harrisburg PA 17112.

Oscar Orbits

Oscar 6 Orbital Information					Oscar 7 Orbital Information			
Orbit	Date (Aug)	Time (GMT)	Longitude of Eq. Crossing °W	Mode	Orbit	Date (Aug)	Time (GMT)	Longitude of Eq. Crossing °W
17348	1	0114:40	75.0	B	7822	1	0119:34	69.7
17360	2	0014:36	60.0	A	7834	2	0018:54	54.5
17373	3	0109:32	73.8	B	7847	3	0113:11	68.1
17385	4	0009:28	58.8	AX	7859	4	0012:32	52.9
17398	5	0104:24	72.5	B	7872	5	0106:49	66.5
17410	6	0004:20	57.5	A	7884	6	0006:09	51.3
17423	7	0059:15	71.3	B	7897	7	0100:26	64.9
17436	8	0154:11	85.0	A	7910	8	0154:43	78.5
17448	9	0054:07	70.0	B	7922	9	0054:03	63.3
17461	10	0149:03	83.7	A	7935	10	0148:20	76.9
17473	11	0048:59	68.7	BX	7947	11	0047:40	61.7
17486	12	0143:54	82.5	A	7960	12	0141:57	75.3
17498	13	0043:50	67.5	B	7972	13	0041:18	60.1
17511	14	0138:46	81.2	A	7985	14	0135:34	73.7
17523	15	0038:42	66.2	B	7997	15	0034:55	58.5
17536	16	0133:38	80.0	A	8010	16	0129:12	72.1
17548	17	0033:34	65.0	B	8022	17	0028:32	56.9
17561	18	0128:29	78.7	AX	8035	18	0122:49	70.5
17573	19	0028:25	63.7	8	8047	19	0022:09	55.3
17586	20	0123:21	77.5	A	8060	20	0116:26	68.9
17598	21	0023:17	62.5	B	8072	21	0015:47	53.7
17611	22	0118:13	76.2	A	8085	22	0110:03	67.3
17623	23	0018:09	61.2	8	8097	23	0009:24	52.1
17636	24	0113:04	75.0	A	8110	24	0103:41	65.7
17648	25	0013:00	60.0	BX	8122	25	0003:01	50.6
17661	26	0107:56	73.7	A	8135	26	0057:18	64.1
17673	27	0007:52	58.7	8	8148	27	0151:35	77.7
17686	28	0102:48	72.4	A	8160	28	0050:55	62.5
17698	29	0002:44	57.4	B	8173	29	0145:12	76.1
17711	30	0057:40	71.2	A	8185	30	0044:33	60.9
17724	31	0152:35	84.9	B	8198	31	0138:49	74.5

Surprising Miniature Low Band Antenna

-- the DDRR low noise antenna (part I)

Joseph M. Boyer
17302 Yukon, Suite 63
Torrance CA 90504

Once upon a time ham radio was nice and easy. You just went out into your own half acre backyard, put up a pair of ninety foot telephone poles, and hung an eighty meter Zepp antenna in the sky. To work the old 160 meter band you fed the same sky wire as an "inverted L" against ground. On the higher frequency bands you played tuning games on the open wire, six hundred Ohm transmission line leading to that flat top until the rig loaded. Such olden, golden times are now only fond memories in the minds of old-timers.

Today the radio amateur has a serious problem finding enough outdoor space in which to erect *any* kind of antenna, let alone an optimum one. There is, however, at least one way out of this restricted space dilemma, a way taken by military forces a few years back: Use an electrically small antenna! Conventional forms of such antennas, whose physical dimensions are small in comparison to the operating wavelength, are rather famous for converting more rf input power into heat than into good signals on the air. Antennas, unlike any other component making up a radio communications system, have stubbornly resisted efforts at miniaturization. Over the last sixty years, however, a quiet but fierce technical battle has been waged in many places in the world in an attempt to reduce the physical size of the transmitting antenna while keeping efficiency within reason. This battle is far from won. Nevertheless, some limited progress has been made to date, as well as certain surprising gains made in terms of antenna function flexibility. As one of the weary but still enthusiastic veterans of this technical warfare, I felt that some of the newer radiating gadgets which have come forth from the melee should be of interest and value to the radio amateur in his present hour of need. In that spirit, the aim here will be not to merely describe what some of these electromagnetic devices look like, but to include enough technical detail about them so the ham can design and experiment with these radiators himself.

Most of the antennas discussed are forms of radiating rf transmission lines of small electrical size. Most of them have originated from military interest in reducing the vertical height and size of conventional antennas. They are still so new, however, that they exist in very small numbers as yet and only render service in military applications. As past research has disclosed that the loading coil-only approach is the least efficient way of reactance loading short antennas, all of these newer, more exotic antennas are brought to resonance using exceedingly low loss capacitance; they make up for their high Q, narrow bandpass nature by being capable of very rapid frequency tuning. Some, like the LPT, are even capable of widebanded performance at good efficiency – in spite of

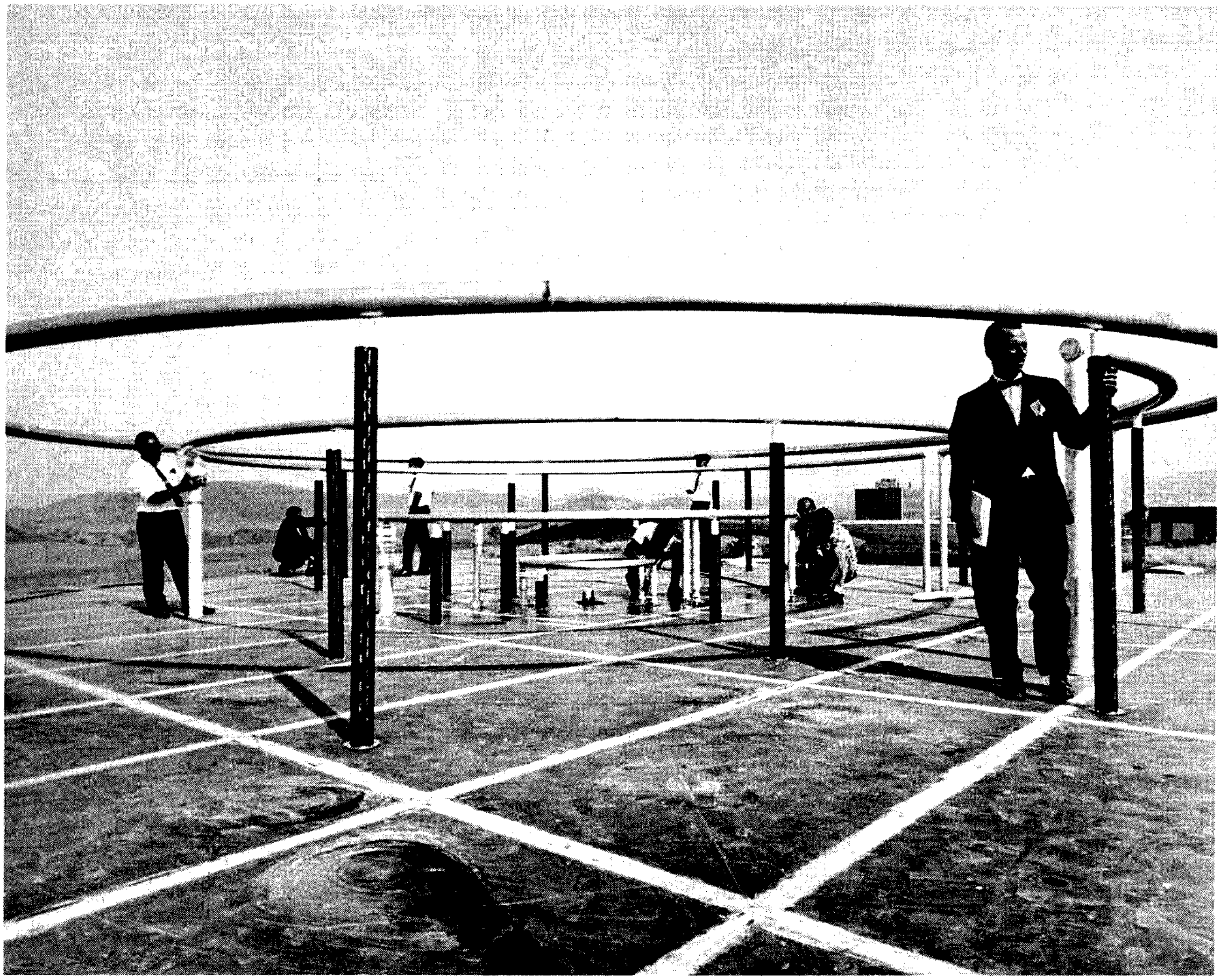

Fig. 1. Close-up view of military-type Directly Driven Ring Radiator (DDRR) antenna set up for long range communications tests in the 2.0 to 30 MHz frequency spectrum. Dark vertical posts supporting the ring elements are fiberglass tubing topped with "beehive" insulators. The hands of the engineer at the left rest on the 50 kV variable vacuum tuning condenser. The height of the ring in the foreground is six feet; the innermost 17.2 to 30 MHz ring element is 1.5 feet in height (Northrop Corporation photograph).

small height. All of them offer the ham with a small size QTH certain advantages over conventional antennas; some even afford a real advancement in overall ham band communications practice. Therefore, we will discuss the new antennas from the ham's point of view.

The Directly Driven Ring Radiator (DDRR)

The DDRR antenna[1] shown in Fig. 1 might well be called the *Little Wonder All-bander.* It tunes continuously from 2.0 to 30 MHz, and will accept *simultaneous* input from up to four 10,000 Watt auto-tune transmitters (Texas kW men and DX contest types take note!). The close-up view in Fig. 1 shows the DDRR set up for long range HF communications tests prior to being installed on the naval ship *USS Wheeling.* Fig. 2 is an aerial view of the same DDRR aboard the *Wheeling* during early sea trials. Although the rugged antenna operated well even when taking "green water" during storms at sea, it was later covered with a pillbox type fiberglass radome. Its location is on the roof of a helicopter hangar aft, the metal roof and surrounding sea serving as a highly conducting ground plane.

The maximum diameter of the *Wheeling* DDRR is thirty-five feet, with its outermost ring element at a height of only six feet above the ground plane. Although such dimensions may not immediately convey the idea of "small size," the antenna is seen to be "small" in terms of the four hundred ninety-two foot wavelength at 2.0 MHz. The *Wheeling* served in the Apollo space exploration program as an HF worldwide network control center, and is now off on similar scientific missions. There are a total of five concentric ring radiator elements. The outer one tunes 2.0 to 3.3 MHz, and the inner four rings tune the bands 3.3 to 5.7 MHz, 5.7 to 10 MHz, 10.0 to 17.2 MHz and 17.2 to 30 MHz, respectively. The ends of each of the ring elements are "grounded" to the metal image plane through metal

[1] U.S. patents (J. M. Boyer): #3, 151, 329; #3, 247, 515; #RE26 196; all assigned to The Northrop Corporation, Hawthorne, California.

posts. Half way around the circumference of each ring conductor, connection is made to ground through individual 50 kV rated, variable vacuum condensers. Each variable condenser is remotely controlled from the ship's radio room by means of two-phase servo drive motors of variable speed. Each DDRR ring element is directly fed with individual fifty Ohm coaxial transmission lines, no auxiliary impedance matching networks being required to obtain low vswr. Originally, provision was made to install reflectometers at the input terminals of each ring element to permit fully automatic servo tuning and frequency tracking with associated transmitters. To my knowledge, however, these units were never installed.

In the radio room there is a visual display readout console which gives constant information for (a) the identity of the transmitter currently in use with a given ring element, (b) the frequency to which each DDRR element is tuned, and (c) the vswr in each of the feedlines. In spite of all this automation, however, an experienced operator in total darkness can hand "slew" the tuning of the DDRR until a background noise peak is heard in a receiver tuned to the desired frequency. When the noise peak is observed, the input vswr in the feedline to the antenna is less than 2:1 and the antenna is ready to accept full transmitter power. Off this tuned frequency, the receiver connected to the DDRR sounds "dead," its S-meter resting on the zero peg.

In a DDRR, all antenna elements are at dc ground potential through extremely low impedance, high current capacity shunts. As a consequence, associated electronic equipment is quite well protected against damaging effects from voltage transients induced by lightning strikes on the ship's structure. Such dc shunts also serve as "static drains" during weather conditions when impact with charged snow or rain particles can build up very high magnitude voltage potentials on conventional antennas. Under such weather conditions, noise level during reception on the DDRR is a minimum of twenty decibels less than that attained on non-drained antenna systems.

Up to here we have been discussing a military antenna. Fortunately, however, I am able to give an account of how such a multiband DDRR operates on the ham bands. During preliminary land-based tests of the antenna in southern California, it was only natural that licensed amateurs serving as engineers and technicians on the project literally itched to know how the thing would work on ham frequencies. A notice of portable operation under the call W6UYH was sent off to Uncle, and one evening the gang adjourned to the large communications van nearby. To get a feel for band conditions using a standard radiator, a one hundred ten foot tall vertical quarter wave tower antenna was used to put out the first call on 160 meters. This antenna, of variable height, was available as a reference $\lambda/4$ monopole during military tests, and could be raised or lowered to ground within three minutes.

A number of contacts were quickly made with relatively local stations; naturally, excellent reports were secured using the big vertical skyhook. The QRN level was substantial and considerable Loran "buckshot" was noticed. The vertical was then dropped, and a touch of a control button sent the motor-tuned DDRR down into the high end of 160 meters (we had made sure it would "inch" a bit below 2.0 MHz, hi!). Almost immediately we heard a number of stations calling us from the Hawaiian Islands. The KH6s said they had been calling repeatedly since our first CQ. We had not heard their relatively weak signals, however, due to the fact that they were buried down under the QRN; now they stood out loud and clear against a much lower background noise level. We also observed that Loran buckshot was way down in magnitude and QRM from very near-channel strong locals was almost absent. To the island stations, there was very little, if any, difference detected in FS between the DDRR and $\lambda/4$ monopole in subsequent comparison transmission under conditions of slow fading.

As engineers, the hams present were a little surprised. We had all been somewhat concerned about the narrow frequency bandwidth of the electrically small height DDRR when operating efficiently with hard fought-for, low Ohmic environmental loss resistance R_Ω. Yet here, with this narrow frequency width antenna acting as a sharply tuned "bandpass" filter *ahead* of the first receiver stages, it was preventing loss of sensitivity due to random white noise loading, greatly reducing QRM and delivering a considerably superior signal-to-noise ratio advantage over the big antenna in a real world, *two way* HF radio communications mode. As one old-timer in the shack sagely observed: "You got to hear 'em, boys, before you can work 'em!" Shifting to 75 meters, it was the same story. Reception, using the relatively wide-banded tower $\lambda/4$ vertical, was a noise pain to the ear; on the DDRR we worked VKs, ZLs and Js, slicing them out from under the noise and QRM as if using a hot knife on butter.

Again, due to the unavailability of test stations on military assigned frequencies at intermediate distance range from our land-based test site, we were able to first observe on the ham bands another deliberately provided performance feature of the *two post* model DDRR antenna: the ability to work stations during daylight hours at distances greater than that of the ground wave fade out zone produced when using quarter wave vertical antennas. In the two post design DDRR, provision had been made to generate an auxiliary, very ***high angle*** radiation pattern lobe in addition to the DDRR's normal, vertically polarized, very low angle "doughnut" omni-pattern. In the lower frequency HF range of 1.0 to about 8.0 MHz, the ionosphere will strongly reflect signals incident upon it at high angles above the horizon. Such an effect is called the ionosphere "sounder mode" of communications and is of military interest because it can give contact range extension during daylight hours. We enjoyed daytime QSOs with stations ranging from 100 to 500 miles distant on 160, 75, and 40 meters — stations which could not be worked using the reference $\lambda/4$ monopole. Subsequent use of the DDRR on the *USS Wheeling* verified the same daytime range extension performance at sea on the lower HF channels outside the ham bands.

How the DDRR Works

Because many of the performance functions and much of the theory of the DDRR antenna apply equally well to the operation of other modern transmission line antennas to be discussed in Part II of this article, it is perhaps justifiable to give here some details about how a DDRR antenna works. While we are at it, we might as well give readers all the dope necessary to tailor one themselves for use in the ham bands. We're talking about an

optimum design, though, so that you end up with a compact size, efficient *antenna,* instead of a "heating element" for rf. Don't worry – no higher math will be used.

A DDRR can be designed for use in just one ham band, or as a model covering all amateur frequency assignments in the HF region. Once the design of a single band element is understood, there will be no problems in adding other band coverage elements. We will assume that the prospective user lives in a typical cramped-space, urban QTH where the installation of a really effective artificial ground plane system is completely out of the question for many practical reasons; to make the design even more attractive, a total vertical height of only six feet will be used in the example here, together with a selection of just one outside diameter conductor size to be employed in all conductors of the DDRR. The design relations given, however, are in such form that other conductor diameters, antenna heights, and frequency bands may be substituted as desired. Later, details will be given for adding the other elements to the one band design example to convert it into an allbander.

Fig. 3(a) shows a dual post DDRR like the *Wheeling* model, erected over a continuous surface, highly conducting ground plane. We will temporarily retain such a super ground plane for our discussion purposes here; later, we will *discard it* completely in the practical home QTH model. Also, we will end up with a one post DDRR, as the two post model does not afford the minimum size design we wish for ham use. In the drawing the rf currents are shown flowing in both the overhead conductors and as image currents in the ground plane at a single instant of time in the rf cycle. It is noticed that the directions of the currents in the ground plane are *not radial* like those produced by a simple vertical monopole antenna. In Fig. 3(b) just one half circumferential section of the two post DDRR antenna is shown in "straightened out" fashion. Because the part of the DDRR element of Fig. 3(b) includes a vertical post conductor, a horizontal conductor elevated above and parallel to the ground plane, a tuning condenser (C), as well as input feed terminals, it will function as a DDRR antenna element itself in our finished design.

Immediately, it would appear that all a DDRR really boils down to is a "one wire," unbalanced rf transmission line parallel to ground at a height h, and "shorted" to ground at one end by a vertical post. This ought to be easy! Now, we will agree with you that the horizontal conductor of total length S° parallel to ground does indeed form nothing more than a "one wire" rf transmission line "stub." But we are going to insist that you unlimber your imagination and go along with us in considering the vertical "shorting" post at one end of such line as *another* separate and different rf *transmission line* also. Any good amateur antenna handbook gives the formula for finding the characteristic impedance of the "one wire" line above ground in terms of its mean height (h) and conductor diameter (d). It is, merely,

$$K_c = 138 \log_{10} \frac{4(h)}{d} \text{ Ohms} \qquad (1\text{-}1.0)$$

Armed with equation (1-1.0), let us begin by selecting the 75 meter band for use in our example. We will start the design at the upper frequency limit band edge of 4.0 MHz. At 4.0 MHz, wavelength λ in air is 984/4.0 MHz, or 246.00 feet. We said we would use only a vertical antenna height of six feet. We will not be precise here and take into account the conductor diameter in determining the electrical length (h°) of the vertical post element at 4.0 MHz. Instead, we will arbitrarily select 4.0 inch O.D., thin wall, aluminum alloy tubing (type 6061T6 or other weldable alloy) for both the post and horizontal conductor. Taking the post height (h) as 6.0 feet, its diameter of 4.0 inches as 0.33 feet, and its radius as 0.17 feet, we find the following "electrical dimensions" at 4.0 MHz:

$$h^\circ = 6'/246.0' \times 360^\circ = 8.78 \text{ degrees}$$
$$d^\circ = 0.33'/246' \times 360^\circ = 0.48 \text{ degrees}$$
$$a^\circ = 0.17'/246' \times 360^\circ = 0.24 \text{ degrees}$$

Knowing these dimensions allows us to use (1-1.0) to get the characteristic impedance (K_C) of the "one wire" over ground horizontal transmission line section as,

$$K_c = 138 \log_{10} \frac{4(8.78^\circ)}{0.48^\circ} = 138(1.86) = 256.70 \text{ Ohms}$$

Turning now to the vertical post itself, it appears that we face a problem in determining its characteristic impedance as an rf transmission line. For example, we know that another way to define the characteristic impedance of ordinary rf transmission lines is in terms of the ratio of the distributed series inductance (L) of the conductor to its distributed shunt capacity (C) between the conductors. Such a relation is written as $Z_O = \sqrt{L/C}$ Ohms. We know we would get K_C equals 256.70 Ohms for the horizontal line section by this alternate formula if we could just measure the distributed series inductance (L) along our 4.0 O.D. conductor and its distributed shunt capacity (C) to ground per *unit length.* Such characteristic impedance is constant along the entire length (S°) of the horizontal DDRR transmission line, because its conductor diameter (d°) and height (h°) is constant per unit length and thus gives constant L to C per unit length. Just looking at the vertical post we see this cannot be the case for a cylindrical conductor mounted vertical to a flat ground plane. Anyone can see that if we sawed out a given width slice from the vertical post conductor at a height of, say, ¼ inch above ground, and measured the shunt capacity of this insulated section to ground there, and then repeated the same procedure at a height of 36 inches above ground, and then at 72 inches above ground, shunt capacity would be maximum at ¼ inch above ground, less at 36 inches, and least at a height of 72 inches. Because shunt C varies with length h°, the ratio of L/C cannot possibly be constant; therefore, the "characteristic impedance" of the vertical post – when considered as an rf transmission line – would have to be a variable function of height h°. At the same time you have a suspicion that the vertical post in the DDRR is something more than just a "shorting post." A grounded, vertical monopole antenna, maybe?? You may wonder what we are up to here.

Well, you are perfectly right. Not only does the characteristic impedance of the vertical post rf transmission line change with height, but it is also a grounded, vertical monopole antenna. How do you find the "characteristic impedance" of a monopole antenna? Well, thanks to a brilliant antenna man, Dr. S. A. Schelkunoff of the Bell Telephone Laboratories,[2] we can do just that:

$$K_m = 60 \left[2.3026 \log_{10} \frac{2(h)}{a} \quad 1.0 \right] \text{ Ohms} \qquad (1\text{-}2.0)$$

The above equation gives the *average* characteristic

[2] S. A. Schelkunoff, "Antennas of Arbitrary Size and Shape," Proc. I.R.E., *29,* 493-521 (September, 1941).

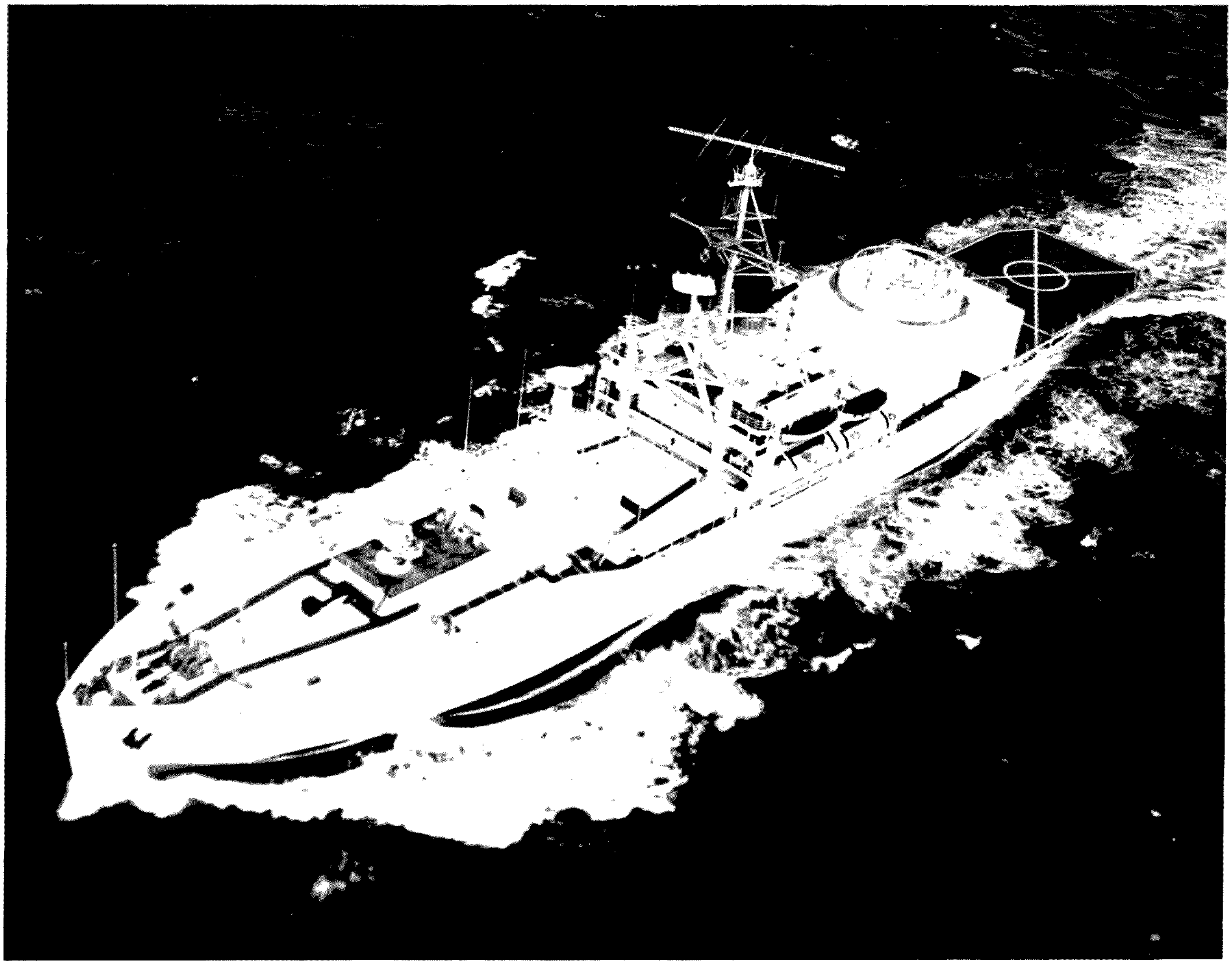

Fig. 2. The DDRR antenna is shown here installed aboard the U.S. Navy communications ship U.S.S. Wheeling. *The antenna is seen mounted aft on the roof of the helicopter hangar. Operating efficiently even though exposed to the weather, the antenna was later covered with a pillbox fiberglass radome housing (official U.S. Navy photograph).*

impedance[3] of a cylindrical vertical conductor monopole antenna over ground having a conductor radius "a" and length h. It is an average value because of the variable nature of the post monopole antenna's characteristic impedance with length h. Schelkunoff's equation (1-2.0) looks so simple in form and very similar to (1-1.0), yet it is loaded with electromagnetic dynamite! We will discuss just how in Part II. Here we can honestly say that, aside from Ohm's Law, this simple little formula may become one of the most useful expressions known to the ham fraternity for getting quick and easy *practical* answers to real antenna problems of all kinds. Oh yes, if you multiply the answer you get from (1-2.0) by two, it gives the average characteristic impedance (K_a) of a balanced *doublet antenna* in *free space* of total length (2 h) formed from two identical "monopoles" of length h and cylindrical conductor radii "a".

[3]The symbols K_c and K_m are used to denote the characteristic impedance of the horizontal and vertical monopole antenna transmission lines, respectively, instead of Z_o, in order to avoid getting these values confused with the Z_o of the standard transmission line we will use to feed the DDRR antenna.

Tuning the DDRR

Armed with the simple formula (1-1.0) and the seemingly simple equation (1-2.0), we are fully equipped now to move on to design our DDRR for resonance and tuning over the width of the entire 75 meter band (or a bit more). Turning to Fig. 3(c), the DDRR antenna is now illustrated as being an antenna system composed of *two* distinct rf transmission lines, one connected to the other. Please do not let the drawing fool you. The first transmission line section, of electrical length h° and characteristic impedance K_m, shown "lying over on its side" still represents the vertical post of the DDRR antenna. It is just easier to indicate the post in this way when it is represented as an rf transmission line. In our "model" drawing of the DDRR antenna system of "open wire" lines, we have two terminals to represent the ground plane end of the post; terminal 1G is ground at a point where the base end terminal (1A) of the post connects to it. At a distance of h° away from the post base, the *top end* of the monopole transmission line has a second terminal (2A). However, "ground" is now labeled 2G, and represents a *circle* drawn *on the ground*

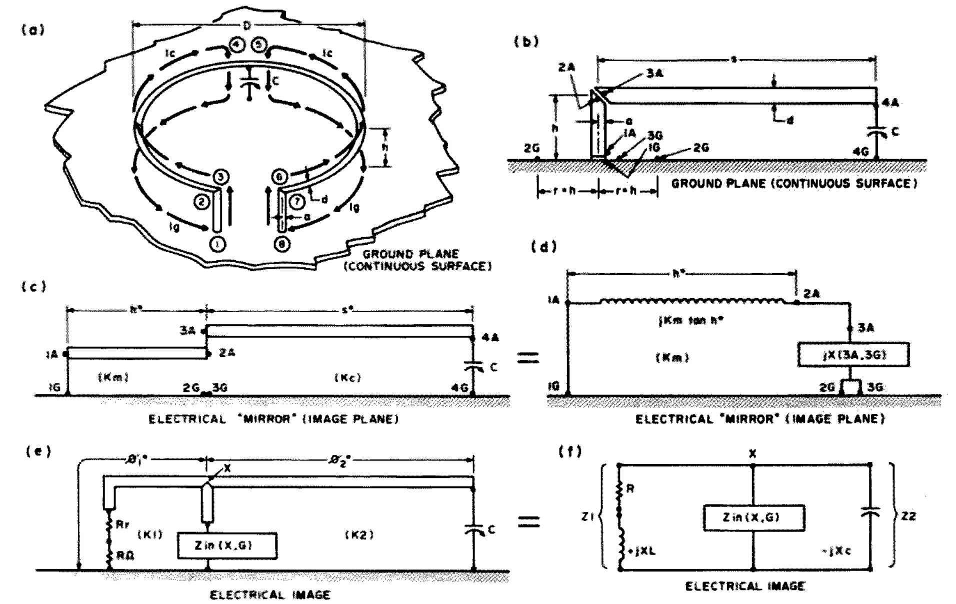

Fig. 3. (a) Wheeling-*type two post DDRR over metal sheet ground plane, showing current flow in elements and ground. (b) Half circumferential section of two post DDRR in linear alignment. (c) Design schematic of vertical post monopole transmission line "terminated" into horizontal transmission line section. (d) Equivalent circuit of monopole transmission line antenna loaded by top reactance. (e) Diagram for matching feed transmission line to the DDRR antenna. (f) Equivalent circuit of input impedance at feedpoint X.*

plane surface with a radius h°, the center of this circle being the post base (a little weird, perhaps, but we need imagination in dealing with antennas!). Then the end of the horizontal line conductor, at the point where it conductively joins the top of the vertical post terminal (2A), is labeled 3A. At a *point* on the ground plane directly below terminal 3A, a ground terminal (3G) is shown. At horizontal distance S° away on the transmission line, of characteristic impedance K_c and at a constant height (h°), the other end of this second transmission line conductor is labeled 4A. Again, directly below terminal 4A, a point on the ground plane forms the terminal 4G. The tuning condenser (C) is connected across terminals 4A and 4G of the horizontal rf transmission line.

Using equation (1-2.0), we can now find the average K_m of the particular vertical post of length h° = 8.78° and conductor radius "a°" = 0.24° we have chosen:

$$K_m = 60\left[2.3026\ \frac{2(8.78°)}{0.24°}\ 1.0\right] = 60\ (3.29) =$$

$$197.57 \text{ Ohms}$$

Now let us imagine that in some way rf energy at 4.0 MHz is fed to our system of two rf transmission lines. As the two lines are *not* terminated into resistive "loads" equal to K_m and K_c respectively, these two rf lines are badly mismatched in impedance; they will act like what we call transmission line "stubs," and establish large amplitude standing waves along their respective lengths. For the moment, let's assume condenser C is either absent or set to an impossible minimum capacity of zero farads. For that condition, a reactive "load" $jX_{in}(3A,3G)$ produced by the horizontal line section of length S° will be "seen" across the "output" terminals 2A,2G of the vertical post transmission line. Because capacity C is absent, and we are temporarily ignoring things such as antenna radiation resistance R_r, we can describe the value of $jX_{in}(3A,3G)$ Ohms which will be "seen" by the vertical post line as a "load" across its output (top end) terminals. See Fig. 3(d). It is

$$jX(3A,3G) = -jK_c \text{ cotan } S° \text{ Ohms}$$

$$(1\text{-}3.0)$$

Because we are temporarily saying that our antenna possesses no resistance or "real" impedance terms, $jX(3A,3G)$ will be a pure reactance. Because the vertical post is now acting like an rf transmission line of length h°, the "load" $jX(3A,3G)$ across its output terminals 2A,2G will become *changed* in value as it "moves" or is transformed down the length h° of the post line to its own "input terminals" 1A,1G. This change or transformation property of rf transmission lines is compactly represented by the well-known terminated transmission line equation:

$$jX_{in}(\ ) = K\ \frac{(jX(\ ))\cos\phi° + jK\sin\phi°}{K\cos\phi° + (jX(\ ))\sin\phi°}$$

$$(1\text{-}4.0)$$

Equation (1-4.0) is written in a form suitable only for lines terminated in a pure reactance load jX(). The symbol K denotes the characteristic impedance of the transmission line and $\phi°$, its length. So here is our DDRR design "law" number 1.0:

"For the vertical post monopole antenna of electrically small length h° to become resonant at a given frequency of operation f_o, the load reactance $jX(3A,3G)$ Ohms placed across its top and ground must be precisely of the correct value so as to change in reactance to the value $jX_{in}(1A,1G)$ = j0 Ohms at the *base of the monopole* where it joins the ground plane."

It turns out that if, and only if, you require $jX_{in}()$ from equation (1-4.0) to equal j zero Ohms, you *needn't solve it completely.* All you have to do is to plug in a load impedance jX() which, when multiplied by the cosine of the line electrical length $\phi°$, makes the algebraic sum in the numerator equal to zero. For that condition, $jX_{in}()$ has to go to zero Ohms. Nature is kind to us here. It turns out that if

$$-jK_c \text{ cotan } S° = -(jK_m \tan h°)$$

$$(1\text{-}5.0)$$

the algebraic sum of (jX()) cos h° plus jK_m sin h° will add up to zero Ohms, making $jX_{in}()$ go to zero Ohms and the post monopole resonant at f_o. Remember, however, that $-jK_c$ cotan S° only equals $jX(3A,3G)$ when tuning capacity C is equal to zero farads. For this case of C equals zero farads, already knowing K_c, K_m and h°, we get:

$$-jK_c \text{ cotan } S° = -(j197.57 \tan 8.78°) = -j30.51 \text{ Ohms}$$

$$(\text{eq } 1\text{-}6.0)$$

Then, knowing K_c, we rearrange (1-5.0) to find how long in electrical degrees S° has to be in the horizontal line to make (1-5.0) true (with all the little j operators and signs canceling out):

$$\cot S^\circ = \frac{K_m \tan h^\circ}{K_c}$$

(1-4.1)

For our particular DDRR, we find that the electrical length of the horizontal transmission line (with no tuning capacitor) must be:

$$\cot S^\circ = \frac{30.51}{256.70} = 0.1188$$

or,

$$\cot^{-1} 0.1188 = 83.22^\circ = S^\circ$$

Plugging our obtained value of S° back into (1-3.0), we can prove that $jX_{(3A,3G)}$ = -j 256.70 cotan 83.22° = -j 30.52 Ohms.

The answer is not precisely equal to $-(jK_m \tan 8.78^\circ)$ because we have not been using enough decimal places to make equality exact. Still, we are now resonant at 4.0 MHz if we place a load reactance of -j30.52 Ohms across the top and ground "circle" terminal 2G of the monopole. But wait a minute! You can't buy a tuning condenser which has a zero farads minimum capacity when tuned with its plates wide open! OK — we just look at the label on the box it came in and find the minimum capacity of our condenser. Say it is C_{min} equals 8.0 picofarads. Here is the question we must ask ourselves: How much "electrical length" at 4.0 MHz does a 8×10^{-12} farad condenser, connected across the end terminals 4A,4G of a line of K_c = 256.70 Ohms, add to that already existing in the line? Now, at 4.0 MHz, an 8.0 $\times 10^{-2}$ condenser offers a reactance $-jX_c = -j\,(\frac{1}{2\pi}\, 4.0 \times 10^6 \times 8.0 \times 10^{-12})$ = -j 4,973.60 Ohms. Say we call the length *added by the condenser* ΔS°. Then,

$$\cot \Delta S^\circ = \frac{X_c}{K_c} = \frac{4{,}973.60}{256.70} = 19.331$$

$$\cot^{-1} 19.331 = 2.96^\circ = \Delta S^\circ$$

(1-6.0)

To correct the length of the horizontal transmission line to compensate for the effect of the "line stretcher" action of C when tuned wide open at the high frequency end of the band, we merely remove 2.96 degrees from the conductor so that our horizontal transmission line *itself* becomes

$$83.22^\circ - 2.96^\circ = 80.26 \text{ degrees}$$

The electrical length of the line itself, and the additional electrical line length added by the minimum capacity of C, now sum up to the necessary 83.22 degrees. In addition, to also take into account other small capacity from the leads to the condenser, another four inches or so (about 0.5°) should be removed to make *sure* we reach 4.0 MHz with C wide open. Right here we will continue to use, however, an actual horizontal transmission line length of 80.26 degrees in completing the DDRR design.

Our "paper" DDRR antenna element now is resonant at the 75 meter high frequency limit of 4.0 MHz. Once in a while we like to spin the rig down to 3.5 MHz (well, 3.499 MHz maybe) and do a little brass pounding and DX hunting. When the frequency of the DDRR is changed from 4.0 to 3.5 MHz, this represents a proportionality factor of 3.5 MHz/4.0 MHz equals 0.875. All the DDRR electrical length parameters will change by such proportionality. For example, the vertical post height will change to h°(3.5 MHz) = 8.78° x 0.875 = 7.68°. The actual line length S° will become S°(3.5 MHz) = 80.26° x 0.875 = 70.23°. We immediately suspect, without having to solve equations (1-3.0) and (1-5.0), that $-jK_c$ cotan 70.23° no longer will be equal to $-(jK_m \tan 7.68^\circ)$. We just *know* that now the DDRR antenna is far out of resonance at 3.5 MHz. However, having seen how the tuning condenser C can act like a "line stretcher," we know how to solve our problem. We first ask, "What load reactance $jX_{(3A,3G)}$ do we now need across the end terminals 2A,2G of the monopole transmission line at 3.5 MHz?" Equation (1-5.0) answers:

$$jX_{(3A,3G)} = -jK_c \cot S^\circ = -(j\,197.57 \tan 7.68^\circ) = -j\,26.64 \text{ Ohms}$$

Second question: "How long would S° have to be at 3.5 MHz to give $jX_{(3A,3G)}$ = -j 26.64 Ohms *if capacity C was absent?*" Equation (1-5.1) answers:

$$\cot S^\circ_{(3.5\text{ MHz})} = \frac{26.64}{256.7} = 0.104;\quad S^\circ_{(3.5\text{ MHz})} = 84.075^\circ$$

We require a total electrical line length S° of 84.075 degrees, but we already have an existing transmission line length of 70.23 degrees at 3.5 MHz. Therefore, we are 84.075°-70.23° = 13.845 degrees *too short.* Final question: "If we meshed in the variable plates of condenser C to make its capacity larger in value, how much capacitive reactance $-jX_c$ would we need to 'stretch' our 70.23 degree horizontal transmission line out to a total of 84.075 effective electrical degrees?" Now, if we look at equation (1-6.0) we see it can be rewritten to solve for X_c when ΔS° and K_c are given. We know K_c, and ΔS° is just our needed extra length of 13.845 degrees. Therefore,

$$X_c = (\cot \Delta S^\circ)\, K_c = (\cot 13.845^\circ)\, 256.70 \text{ Ohms}$$
$$X_c = (4.058)\, 256.70 = 1{,}041.56 \text{ Ohms}$$

To obtain 1,041.56 Ohms of capacitive reactance at 3.5 MHz, we will need a condenser capacity of $\frac{1}{2\pi}$ 3.5 x 10^6 x 1,041.56 = 43.66 x 10^{-12} farads. Of course, the nearest standard tuning capacitor size to 43.66 picofarads is fifty picofarads. The remaining capacity in the variable tuning condenser would permit us to tune down a *bit below* 3.5 MHz, either to listen around or transmit if we had some legal reason (MARS?) to do so. As the DDRR antenna is electrically small, there will be quite a respectable voltage drop across the tuning condenser C. Use 10 kV per 1.0 kW of *peak* input power to the antenna to obtain a decent safety factor to prevent condenser flash-over on modulation peaks. Readers will see that if we kept adding capacity C, the 75 meter band DDRR could be pushed on down to the 160 meter band and even into the standard BC frequency assignments. Please don't try to do this! A *bit* below 3.5 MHz is fine. When you add more tuning capacity to the DDRR to stretch tuning too far, a number of undesirable things begin to happen to lower efficiency. We have an optimum design up to here. Don't ruin it, please. If you need 160 meter coverage, design a separate 160 meter band element according to the relations given here for 75 meters. In Part II we will tell how to combine the elements into a single allband DDRR which can hop from one band to the next like a jackrabbit.

Matching the DDRR

In Fig. 3(e) the DDRR transmission line section is shown, still in "straightened out" form. Although we do not yet know the values of radiation resistance R_r and the environmental ohmic loss resistance R_Ω, these two "resistors" are shown schematically connected in series between the base terminal 1A of the vertical post and ground 1G. In antenna theory, radiation resistance R_r is always referred, by convention, to a current maximum point in an antenna. Although "referred" to this point, however, the total resistance $R_t = R_r + R_\Omega$ may be "transformed" to any other point X on the antenna, just as our top load reactance $jX_{(3A,3G)}$ was transformed to the base terminals 1A,1G of the monopole. That, however, was a "movement" along the line length in the *opposite* direction. We also recall that when tuning capacitor C made $jX_{(3A,3G)}$ correct in value, it transformed along the length h° of

the vertical post transmission line and became zero reactance at its base. The radiation resistance magnitude of an electrically small antenna is not large. By design, we also go all out to keep the ohmic loss resistance R_Ω small in value.

Now, if we tried to conventionally feed the DDRR in series with the vertical post base, we would face the very severe problem of making an impedance match between this very small value of *resonant* input impedance $Z_{in}(1A,1G) = R_r + R_\Omega + j0$ Ohms there and the characteristic impedance Z_0 of our standard feedline. To achieve such match would require an *auxiliary* impedance matching transformer which would *also* have to be *tuned in track* with C when we changed frequency. To avoid this needless difficulty and technical messiness, we use the DDRR antenna itself as an impedance step-up transformer, so that we can connect the standard feed transmission line directly to the DDRR antenna at some conductor point X to obtain a low vswr match. It was said a while back that the DDRR is just a system of open wire, transmission line "stubs." There is a really wonderful thing about a resonant transmission line stub: At resonance, no matter at which point along its conductors you measure impedance, it always is found to be a *pure resistance.* If one end of a "one wire" line stub is "shorted," and you measure between the conductor point X and ground, you get an input impedance,

$$Z_{in}(X,G) = \frac{Z_1 \times Z_2}{Z_1 + Z_2} \tag{1-7.0}$$

This input impedance is schematically shown in Fig. 3(f), where in equation (1-7.0)

$$Z_1 = K_1 \frac{(R_t + j0)\cos\phi_1^\circ + jK_1 \sin\phi_1^\circ}{K_1 \cos\phi_1^\circ + j(R_t + j0)\sin\phi_1^\circ}$$

$$Z_2 = K_2 \frac{(0 + jX_c)\cos\phi_2^\circ + jK_2 \sin\phi_2^\circ}{K_2 \cos\phi_2^\circ + j(X_c)\sin\phi_2^\circ}$$

K_1 is the characteristic impedance of the transmission line section to the *left* of point X of electrical length ϕ_1 degrees; and K_2 is the characteristic impedance of the transmission line section to the *right* of point X of electrical length ϕ_2 degrees; and $R_t = R_r + R_\Omega$; and X_c is the reactance of tuning condenser C at frequency f_0.

The great thing is that in practical design of a DDRR you don't have to bother to solve equation (1-7.0), nor do you have to have a nice but expensive Z bridge in order to make a low vswr impedance match to the DDRR in finding point X. This is because, when you design your DDRR antenna element section as given here and adjust condenser C to produce resonance at the operating frequency f_0, all shunt reactance at point X and ground goes to zero, leaving only a resistive value of input impedance. What you do instead is this: (a) carefully grid dip your new DDRR (loose coupling to the post base) to an f_0 close to the *middle* of the ham band; (b) put the rig on low power or "tune" so that it feeds a signal at f_0 into the coax leading out to the DDRR; (c) connect a vswr meter in series with the end of the coax close to the DDRR where you can read the instrument; (d) connect the shield braid of the coax on the other side of the vswr meter to a *temporary* ground point; and (e) starting at a point X a little way up the *vertical post,* tap the inner conductor of the coax to successively higher points X until vswr falls to 1.0:1 at f_0.

A few words of fraternal advice, however:

(1) Make your grid dip reading to f_0 while adjusting C to get resonance *without the coax feed connected to the DDRR;* otherwise, you will get a false reading.

(2) When you then connect the coax in shunt across point X and ground you will disturb the DDRR's near-zone field and the resonance will shift frequency. That doesn't matter: With the rig *still on f_0,* "tweak" the tuning condenser CCW or CW until you find the point of *minimum* vswr at that point X on the antenna. If the *minimum* vswr found by careful adjustment of C is higher than 1.0:1, shift to a higher point X on the antenna and repeat the "tweaking" process. When you find the *midband* frequency point X where adjustment of C gives a minimum vswr of 1.0:1, you will find that this *same fixed point* X will yield a vswr of less than 2:1 when the DDRR is tuned anywhere in the band (or a bit more). The final point X, found for 1.0:1 vswr in the middle of the band, *may* end up either on the vertical feed post *or* out on the conductor of the horizontal transmission line section; its exact location is determined by h° and K_m. The larger h° is and the lower K_m is, the *lower on the antenna* the 1.0:1 vswr point X will be found. Lastly, you will be bothered by the fact that the DDRR tuning is very touchy and that the presence of your body near the antenna affects tuning. This happens in all electrically small antennas of *high* efficiency. When you actually match your finished DDRR it will be in a different shape and have a remotely driven tuning condenser, and there will be no ordinary kind of metal sheet or radial wire ground plane beneath it. You will be able to mount it on the wooden garage roof or rest it on coke bottles over the bare ground. After giving last touches to the ham band DDRR, we will go on to describe some other electrically small, transmission line antennas which we hope you will find both interesting and useful. Because of your briefing on the DDRR, understanding these other antennas will be mere child's play. ■

Erich A. Pfeiffer WA6EGY
16526 Buchet Drive
Granada Hills CA 91344

Fig. 1. MINI-MOS electronic keyer with dual paddle key. The transistor battery in the foreground not only shows the size of the keyer, but can also power the keyer for over one year of daily operation.

MINI-MOS-- The Best Keyer Yet?

--nothing Mickey Mouse about this one

Some time ago, when my code speed had gradually crept up to 16 wpm, I felt ready to trade my straight key for something more advanced. A "COSMOS IC electronic keyer," described in an article by WB2DFA[1] seemed to be a good choice. The keyer was built and seemed to perform fine. In due time, however, some limitations were found, which unfortunately proved to be inherent to the design approach chosen by WB2DFA:

- The keyer did not have a dot memory. This makes it necessary to move the keyer paddle exactly in the right rhythm; otherwise one can easily lose dots, especially in letters like K, C and Y.
- The keyer used a continuously running clock. When the dot or dash contact is closed, the keyer has to wait for the next clock pulse before the code element is sent. This is especially noticeable at low code speeds.
- The keyer drew very little current and was, therefore, operated from a 9 volt transistor battery. Theoretically the battery should give over 200 hours of operation. If one forgets to turn off the keyer, however, it does not last very long.

At a local hamfest I had a chance to compare several commercially manufactured keyers, including some that had dot and dash memory and iambic keying. After this experience I was no longer satisfied with my old keyer and decided to design a better one. My keyer was to incorporate the features available

in the best commercial keyers, but would also fully utilize the advantages of complementary MOS technology.

The result of this design project was the MINI-MOS keyer shown in Fig. 1, which has now been in use for over one year. This keyer has the following features:

- Dot and dash memory and gated clock.
- Iambic operation when used with a double ("squeeze") paddle.
- Extremely low standby current, which makes it unnecessary to provide an on-off switch.
- Low "key down" current, which makes it possible to operate the keyer from a normal 9 volt transistor battery for at least one year.
- Low component count (7 ICs and few discrete components).
- Built-in sidetone oscillator with speaker and keying circuit for grid-block keyed transmitter.

The completed keyer is very compact and can be packaged in a minibox measuring only 2 by 2 by 4 inches, including batteries and sidetone speaker. Together with a small dual paddle, the keyer was mounted on a base only 4 by 4 inches in size.

Circuit Description

The keyer utilizes the "complementary metal oxide silicon" or CMOS technology. Digital integrated circuits based on this technology were first introduced by RCA as the CD4000 series, which is now also available from several other manufacturers. While normally the acronym CMOS is used for the technology, RCA favors the term COS/MOS. Another family of CMOS ICs is the 74C series, which is pin compatible with the well-known 7400/5400 TTL series. Until not too long ago, CMOS ICs were a rarity on the surplus market and, if available, were much more expensive than comparable TTL ICs. But today CMOS ICs are available from many mail order suppliers. While prices have come down substantially, they still can differ a lot between dealers and it pays to compare advertisements. Because the CD4000 series seems to be available more readily than the 74C series, it was used in the design of the MINI-MOS keyer.

The operation of the keyer circuit will be described using the "positive logic" convention. This simply means that when the voltage at a certain point in the circuit is "high" (close to the positive supply voltage VDD), it will be assigned a logical "1." Conversely, the logical "0" corresponds to a "low" voltage (close to the negative supply voltage VSS).

Fig. 2 shows the circuit diagram of the keyer and lists the parts used. The dot and dash contacts of the keyer paddles are connected to two RS (reset-set) flip flops which serve as memories for the entered code elements. These flip flops are made up from four NAND gates contained in IC U1. One of the flip flops is redrawn in Fig. 3, which also shows the so-called "truth table" of the circuit. This table simply indicates the voltages at the outputs Q and $\bar{Q}$ of the circuit for the four possible combinations of input voltages. While these flip flops store the entered dot or dash, the code element currently being sent is stored in one of the two flip flops U3A and U3B. These flip flops are of the D (data) type and can be set and reset in two different ways. A logical 1 at the S or R input of the flip flop will set or reset it asynchronously – that is, at the instant the voltage goes from low to high. The flip flop can also be set by a logical 1 and reset by a logical 0 applied to the D input. This, however, occurs synchronously with a clock signal applied to the C (clock) input and at the instant this signal makes a transition from high to low.

When the keyer is in standby (that means if no code element is currently being sent), dot flip flop U3A as well as dash flip flop U3B are in the reset position and both their $\bar{Q}$s will be high. In this case the output of AND gate U4A is also high. This output is connected to one input of the AND gates U2B and U2D. This has the effect that the output of the dot memory is connected to the S input of dot flip flop U3A, while the output of the dash memory is connected to the S input of dash memory U3B. One input of NOR gate U7A also receives a high signal which stops the clock.

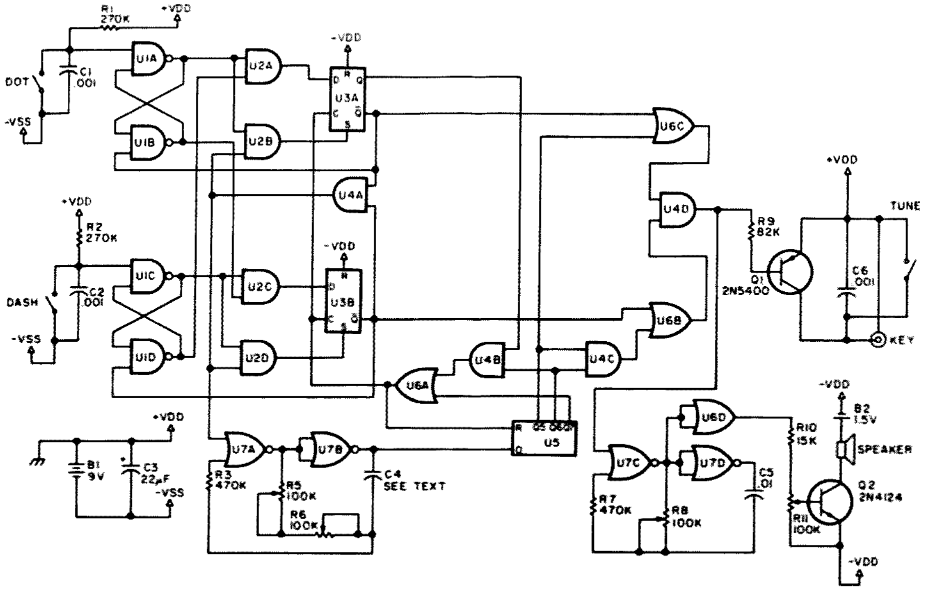

Fig. 2. Circuit diagram of the MINI-MOS keyer. Parts list: U1 – 4011 quadruple 2-input NAND; U2, U4 – 4081 quadruple 2-input AND; U3 – 4013 dual D-type flip flop; U5 – 4024 7-stage binary counter; U6 – 4071 quadruple 2-input OR; U7 – 4001 quadruple 2-input NOR; Q1 – 2N5400 or other small signal PNP transistor with a voltage rating sufficient for the keying voltage of the transmitter; Q2 – 2N4142 or most any other small signal NPN silicon transistor; R5, R11 – miniature potentiometers, 100k Ohm linear taper; R6, R8 – trimpots, one turn, 100k Ohm; C4 – see text; C3 – 22 microfarad, 15 volts; B1 – standard 9 volt transistor battery; B2 – AA cell, regular or alkaline type; SP – miniature speaker, 2 inch diameter (Radio Shack or other).

Fig. 3. Reset-set (RS) type flip flop made up from NAND gates. The "truth table" shows the relation between signals at the inputs and outputs of the circuit.

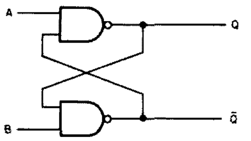

	A	B	Q	$\bar{Q}$
SET	0	1	1	0
RESET	1	0	0	1
STORE	1	1	x	$\bar{x}$
AMBIGUOUS	0	0	1	1

Now, when either the dot or the dash contact is closed, causing a logical 0 at the set input of the dot or dash memory, the Q output of this memory flip flop will go high. This in turn causes the corresponding D flip flop to be set instantaneously via its S input. When the D flip flop is set, its $\bar{Q}$ output goes low. This causes the appropriate memory flip flop to be reset at the instant the dot or dash contact is opened again. The logical 0 at the $\bar{Q}$ output of the D flip flop, via AND gate U4A, also disconnects both memory flip flops from the S input of their associated D flip flop. At the same time the clock is started.

The D flip flops now operate in the synchronous mode and can change their state only when a negative going transition occurs at their C inputs. Let us assume that the dot flip flop U3A has been set in this way, and examine what happens when a negative transition occurs at the C inputs of U3A and U3B. There are actually four different possibilities:

1. The dot contact has been opened and the dot memory has been reset. The dash memory has not been set. This results in a low signal at the D input of U3A. When the clock signal goes low, this flip flop will therefore be reset and the circuit returns to the standby status.

2. The dot contact is still closed and the dot memory, therefore, has not been reset. This causes a high signal at the D input of U3A. This flip flop thus does not change its state when the clock signal goes low, which results in another dot being sent.

3. The dot contact has been opened and the dot memory has been reset, but the dash contact has been closed, setting the dash memory. This results in a low signal at the D input of U3A and a high signal at the D input of U3B. When the clock signal goes low, U3B will be set, while simultaneously U3A is reset. Thus a dash will be sent following the dot.

4. Both the dot and the dash contact are closed and both memory flip flops are therefore in the set position. This would place a logical 1 at the D inputs of both U3A and U3B, were it not for the iambic gates U2A and U2C. These gates have one of their inputs connected to the $\bar{Q}$ output of the "opposite" memory flip flop. Because the dash memory is in the set position, its $\bar{Q}$ output is low. Via U2A this results in a low signal at the D input of U3A. The dot memory is also in the set position, but U3A is trying to reset it. As can be seen from the truth table in Fig. 3, this causes both outputs of the memory flip flop to go high. Via U2C this results in a high signal at the D input of U3B. When the clock signal goes low, this causes U3A to be reset and U3B to be set. If the dot and dash contacts continue to be closed, the process will be reversed the next time the clock signal goes low. The keyer, therefore, will send dots and dashes alternately in the so-called iambic mode until one or both key contacts are opened. (The word iambic, incidentally, comes from the iamb or iambus, a Greek verse in which long and short syllables alternate.)

U3A remains in the set position while a dot is being sent, as well as for the space that follows. The clock pulse to reset U3A, therefore, has to occur two dot elements after the flip flop has been set. The clock pulse for resetting the dash flip flop U3B has to come 4 dot elements after it has been set. In order to obtain the spaces after the dot and dash, pulses after 1 and after 3 dot elements are also required. These pulses are obtained from the clock through a pulse divider. The clock consists of the NAND gates U7A and U7B, which are connected as a free running, gated multivibrator[2,3]. This circuit is amazingly stable, and a variation of the supply voltage between 6 and 10 volts causes a frequency shift of only about 1%. The square wave at the output of the multivibrator is not completely symmetrical, however, and the first period after being gated on may have a slightly different length than the following periods. In order to avoid timing errors, the clock signal was not used directly, but was divided in a frequency divider. The IC U5 very conveniently contains not fewer than seven flip flops which are connected as a seven stage binary counter. The output of the fifth stage, Q5, goes high after 2^4 or 16 input pulses, and goes low again after 2^5 or 32 input pulses. This output is used to represent one dot element. Similarly, the output of the sixth binary stage, Q6, represents two dot elements, and the output of the seventh stage, Q7, four dot elements. A signal representing three dot elements is obtained by connecting Q5 and Q6 to the inputs of AND gate U4C. A reset pulse after 2 dot elements must occur only if a dot is being sent, that is, if U3A is in the set position. Output Q of U3A is therefore used to gate output Q6 via AND gate U4B. If U3A is not in the set position, the reset pulse comes from output Q7 and occurs after 4 dot elements. OR gate U6A is used to combine the two reset pulses. The output of this gate not only provides the clock pulse for the two D flip flops, but also resets the binary counting stages of U5. As a matter of fact, when Q6 or Q7 goes high and applies a high signal to the R input of U5, resetting the binary stages causes the output to immediately go low again. The clock pulse, therefore, is only about one microsecond long.

Most modern transmitters and transceivers use grid block keying and their keying input carries a negative voltage of somewhere between 50 and 150 volts with respect to ground. On "key down," the key has to sink a current of a few milliamperes. This voltage can easily be keyed with a PNP

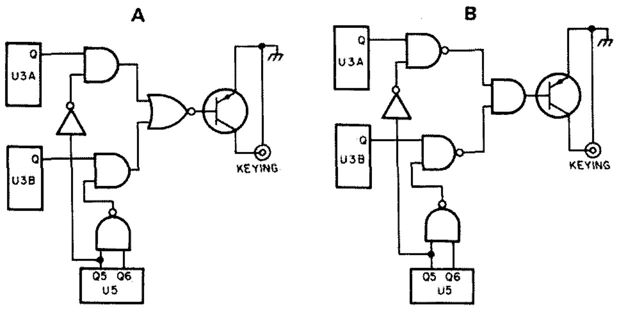

Fig. 4. a. First design of the keying section. b. DeMorgan's theorem (see text) applied to the NOR gate.

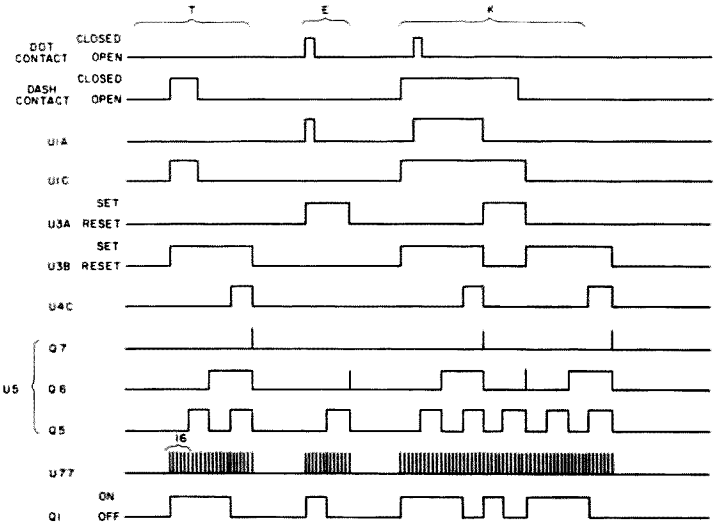

Fig. 5. Pulse diagram showing the signals at different points of the circuit when the letters "-T-E-K-" are being sent.

transistor of sufficiently high voltage rating. The emitter of this transistor has to be connected to the +VDD voltage of the CMOS circuit. The transistor is turned on by a logical 0 at its base.

The initial design of the keying section is shown in Fig. 4a. The two AND gates together with the inverter and NAND gate are used to turn the keying signal off during the last dot element of a keying cycle, thus providing the space after the dot or dash. The circuit in this form, however, does not utilize efficiently the gates that are left over from the timing section of the keyer. The circuit of Fig. 4a was therefore modified using a rule known as the DeMorgan theorem (named after a 19th century British mathematician). This rule simply states that a gate can be replaced by its opposite type (AND with OR or OR with AND) if inputs and output of the gate are inverted. If this rule is applied to the NOR gate of Fig. 4a, the circuit of Fig. 4b is obtained. If the rule is applied a second time, this time to the two NAND gates of Fig. 4b, the final circuit shown in Fig. 2 results, which utilizes the available gates much more efficiently than the initial design.

The sidetone oscillator was built from the remaining two NOR gates (U7C and U7D), using the same circuit as for the clock. One OR gate, U6D, which was left over, was put to good use as a buffer to make the frequency of the sidetone oscillator independent of the sidetone volume. U6D has to be connected to the output of U7C, which is low during standby to keep current from flowing during the standby mode. The sidetone signal is applied to the base of transistor Q2, which is driven in class C mode. When volume control R11 is completely counterclockwise, Q2 remains cut off and no separate on-off switch for the sidetone is necessary. The power for the speaker is supplied by a separate battery (one AA cell). This was found to be simpler than providing an output transformer for the speaker.

The keying transistor, Q1, is rated for a maximum collector-emitter voltage of -120 volts. Its current sinking capability is determined by the resistance of R9. With the value given in Fig. 2, the keyer can sink currents of up to 4 milliamperes even when the battery voltage has dropped to 6 volts.

For use with a cathode- or emitter-keyed transmitter, Q1 can be used to drive an NPN transistor with a voltage and current rating sufficient to key the transmitter. In this case R9 has to be chosen so that the NPN transistor saturates safely on "key down." The MINI-MOS keyer also will have to be grounded at the -VSS rather than the +VDD side of the battery. This modification, however, is likely to increase the current drain on the battery.

In order to show how the different parts of the MINI-MOS keyer circuit work together, a timing diagram is given in Fig. 5. This diagram shows the voltages at various points of the circuit when the letters "-T-E-K-" are being sent. For the letter K, which has been shown as being sent in the iambic mode, the function of the dot and dash memories can easily be seen.

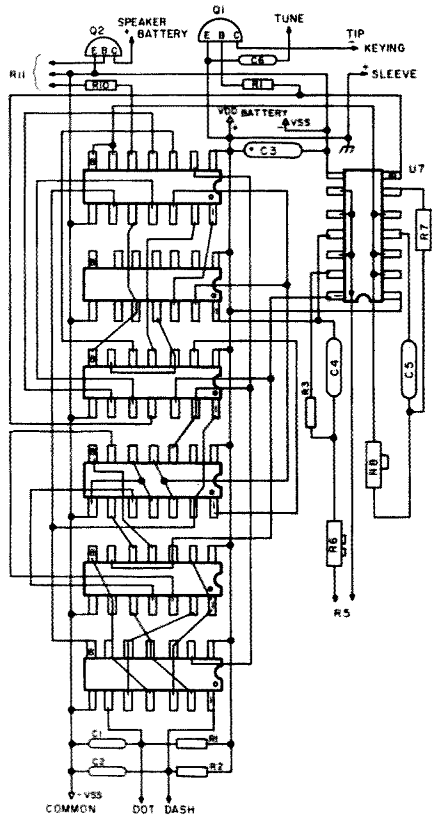

Fig. 6. Wiring diagram of the MINI-MOS keyer. View is at the pins *of the integrated circuits.*

Construction of the Keyer

It is much easier to build the MINI-MOS keyer than to

understand the functioning of its circuit. The circuit was assembled on a small piece of perforated circuit board. The wiring was done with #24 bus wire, using spaghetti tubing (preferably teflon) as insulation at the points of wire crossing. All that is necessary for this technique is a small soldering iron, tweezers, a steady hand, and – if one is over 40 – a good watchmaker loupe. Long wire runs, like the supply buses, were "woven" through the holes of the circuit board to stabilize the wire in order to prevent shorts. From previous experience, however, it was found advisable to work from a wiring diagram in order to prevent errors. This wiring diagram is shown in Fig. 6. (It would be a service to mankind if some fellow ham experienced in the fine art of PCB layout would convert Fig. 6 into a printed circuit board.) A view of the completed circuit board, mounted in the minibox together with the other components, is shown in Fig. 7.

It might be worth mentioning that the circuit was first assembled on one of the plug-in boards available for the breadboarding of IC circuits. In transferring the breadboard to the final circuit board, an unusual problem was encountered: The circuit did not work, because the pinout diagram for the CD4013 in the RCA databook (1975 edition) contained an error (Fig. 6, however, shows the correct connection).

The keyer has only three external controls: adjustments for code speed (R5) and sidetone volume (R11), and the tuning button, which was mounted on top of the minibox. Trimpots, accessible through holes, allow setting of the sidetone frequency (R8) and the maximum code speed (R6). The minimum code speed is determined by C4. When a .05 microfarad capacitor is used, the slowest code speed is about 5 wpm, while a .025 microfarad capacitor results in a minimum speed of about 10 wpm. These capacitors should be of the mylar type in order to avoid frequency changes with changing temperatures. Because of the stability of the clock circuit, it is actually possible to calibrate R5 directly in wpm, which should be of interest if the keyer is used to send code practice lessons. The standard code speed, as it is used for the FCC code test, is based on words exactly 50 dot elements long (the reference word is "Paris"). Because 16 pulses at the output of the master clock (U7B) correspond to one dot element, the code speed can be calibrated by measuring the clock frequency. If available, a counter can be used for this purpose; otherwise, the frequency can be beat against an audio oscillator. A code speed of "X" wpm corresponds to a clock frequency of X times 13.3 Hz. Thus a code speed of, for instance 20 wpm, is sent when the clock is set to a frequency of 266 Hz.

The standby current drawn by the circuit is less than 1 microampere. In the standby mode the life of the battery, therefore, is actually determined by its shelf life. On "key down" (actually, when both paddles are pressed), the circuit draws between 850 and 1000 microamperes, depending on the setting of the sidetone volume. For this current value the tables of the battery manufacturers show an estimated life of about 450 hours until the battery has been discharged to 5 volts. The battery should therefore be good for well over one year of daily operation. So, once a year let the MINI-MOS keyer have a new set of batteries, whether it needs it or not. The sidetone amplifier, however, at maximum volume draws up to 10 milliamperes of current. With a standard (carbon-zinc) AA cell, this results in a battery life of only about 200 operating hours. If the sidetone is used at high volume settings, use of an alkaline type AA cell is therefore recommended to assure a full year of operation on one set of batteries.

The MINI-MOS keyer can be operated with any single or double (squeeze) paddle key, although the iambic feature can, of course, be utilized only with the latter type. ■

References

[1] James W. Pollock WB2DFA, "COSMOS IC Electronic Keyer," *Ham Radio*, June 1974, page 6.

[2] J. A. Dean and J. P. Rupley, "Astable and Monostable Oscillators using RCA COS/MOS Digital Integrated Circuits," *RCA Application Note ICAN-6267.* (This application note is reprinted in the RCA COS/MOS data book, 1974 and 1975 editions.)

[3] *RCA COS/MOS Integrated Circuits Manual*, Technical series CMS 271, page 89.

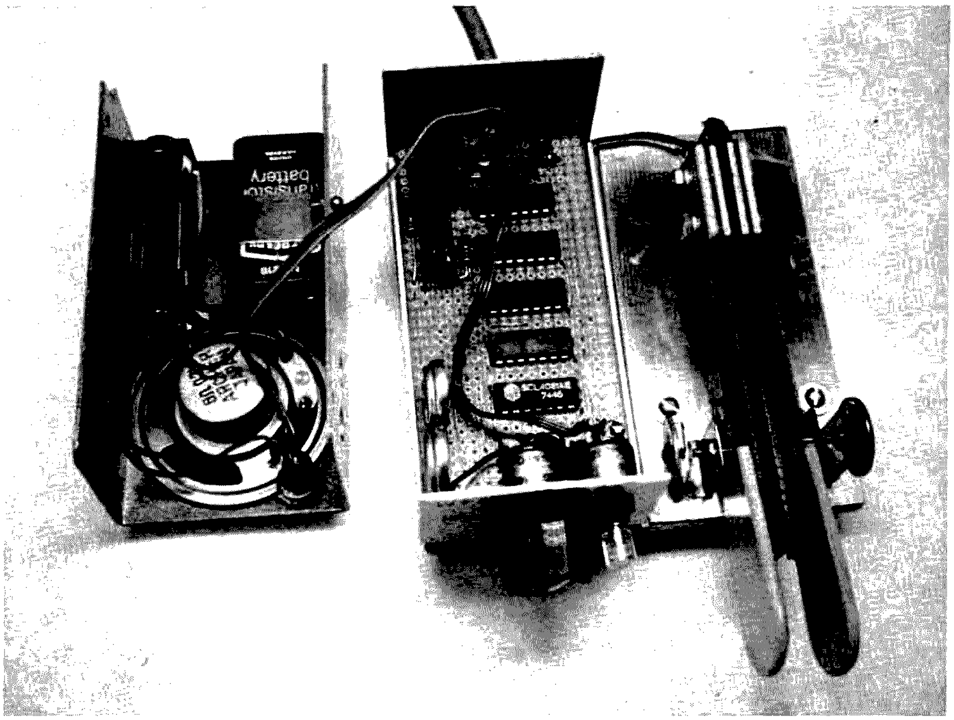

Fig. 7. View of the completed keyer with the top of the minibox removed. The sidetone speaker, the batteries and the tuning push-button are mounted in the top and connected to the circuit board by a 4 lead ribbon cable.

Bob Hart K7YGP/7
622 W. 4th St.
Medford OR 97501

The Skinflint's Delight Breadboard

-- cheap imitation of a commercial IC DIP board

You say you've got that logic system all designed and are ready to give it a try? But you don't have anything to build it on and trying to build it without a circuit board would drive you crazy? And you hate to waste your time designing a circuit board for a circuit that may not even work? For a price, you could buy a bunch of those pre-etched breadboarding cards. Or you could give up the whole thing. Thankfully, there is another alternative.

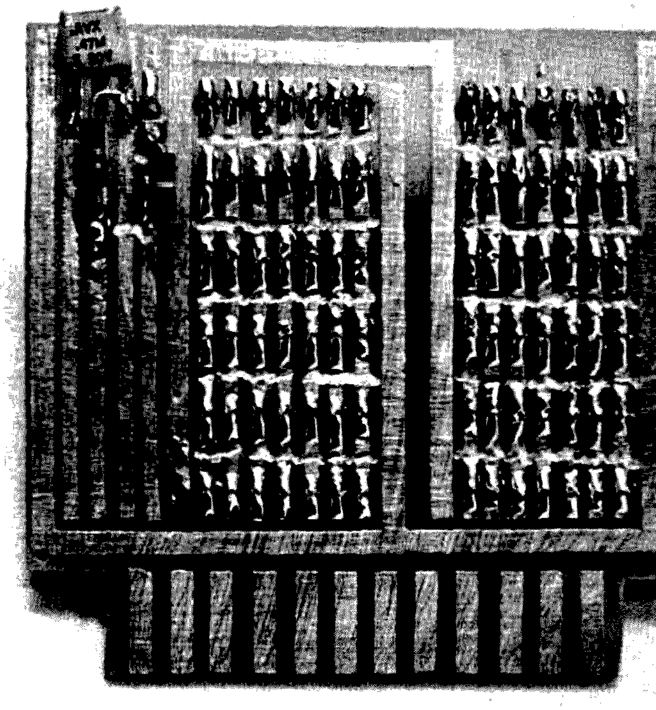

IC breadboard with no wiring. Note tinned pads and discrete components.

Here is a system I've used with a fair amount of success. It's inexpensive, easy to fabricate, gives a high component density, allows for easy changes, and can perform quite well as a finished product. To be honest, there are disadvantages. Firstly, your eyesight had better be good, since things get pretty crowded (but don't all IC projects?). Also, because of the crowding, a *small* soldering iron (such as an Ungar Princess®) is recommended. Since this is a breadboard, the neatness of the resulting circuit is somewhat less than optimum. If you think the plusses outweigh the negatives, please read on.

What we are going to manufacture is a cheap imitation of a commercial IC breadboard. The board is designed to hold six 14 pin DIP ICs in two columns of three packages. Between each

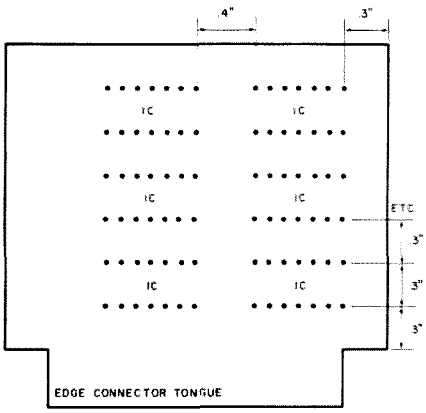

Fig. 1.

column and around the edges of the board are ground and supply voltage buses. A few extra conductor strips may be etched on the board, if desired, for mounting discrete components. Also, one edge of the board can be etched to mate with an edge connector. Getting all of those individual pads etched neatly sounds like quite a job. Luckily, there is a shortcut – called artwork tape. This is a narrow black tape, similar to masking tape, used primarily in drafting. The adhesive used on this tape is fairly impervious to etchant, so the tape can be used as etch resist by direct application to the copperclad board. And since this tape is available in a dozen widths from .015" (that's narrow!) to .25", the required conductor width is easy to obtain.*

How To

Before we start manufacturing the board, the necessary tools and materials should be collected. These are:

Artwork tape, .062" wide (for IC pads)
Artwork tape, .125" wide (for buses and edge connector pads)
Small X-acto knife
Copperclad glass-epoxy board
Etchant (I prefer ferric chloride – it etches fast but it's messy)
Dremel Moto-tool with small burr (optional but very handy)
Small center punch (try not to use an awl – they tend to punch holes clear through the circuit board)
0.1" grid paper
Masking tape
Pencil (with eraser)
Number 65 drill bit (somewhere around that size)
1 pair thin cotton gloves (so you don't get your prints all over the board)

Now we can start. The process begins by laying out the IC pin locations on the .1" grid paper. (See Fig. 1.) Line up the packages parallel to each other with like pins in a line. The pins are separated by .3" and the same spacing between ICs is about right. Between each column of ICs there should be space for two .125" conductors. Allow .4" for this. The edge of the layout should be about .3" from the nearest IC pin location. In the layout shown, extra space has been left on the left side for mounting discrete components. The tongue on the bottom is of proper depth and width to fit an edge connector (measure yours), and starts .3" from the nearest IC pin location.

After the layout is completed, cut a piece of circuit board to the proper size. Tape the paper layout in the correct position over the copper side of the board. With the center punch, punch all IC pin locations hard enough to mark the copper and provide a start for a drill bit (but not hard enough to raise the copper around the punch mark). After punching all pin locations, remove the paper layout.

To prepare the board for application of the resist tape and eventual etching, scrub the copper with steel wool until it's shiny, and then wash it with warm, soapy water. As usual in any PC board article, you are now advised not to touch the copper with any part of your uncovered body (lest lightning strike). Since application of the artwork tape requires much handling of the board, thin gloves are recommended.

Now get out the .062" tape and a knife. We are going to lay a stripe of tape perpendicular to the IC orientation, covering all punch marks in that line. Start the tape about .2" above the first punch mark and end it the same distance below the last. It is easier to apply the tape longer than necessary and then trim it to the desired length. Press the tape firmly to the board with your covered finger or some sort of small roller. Repeat this taping process for all IC pin columns (7 times for one column of 14 pin ICs).

If you have or can borrow a Dremel Moto-tool, you can skip this paragraph. It is necessary to cut a gap in the

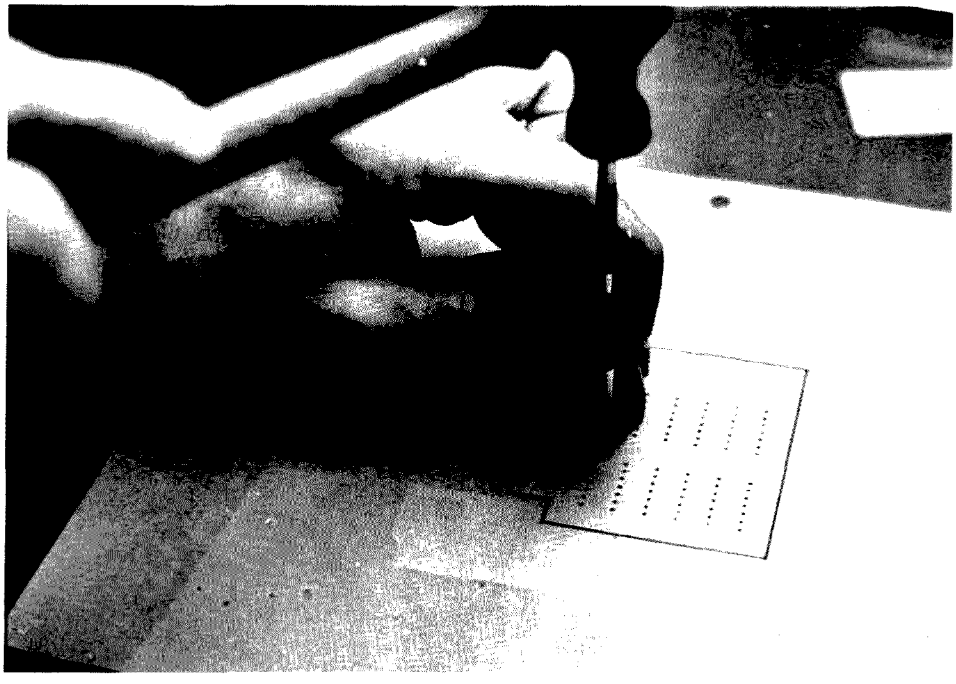

Center punching the .1" grid paper.

*Artwork tape is available from any engineering supply store.

tape between each row of pin locations. Using the paper layout to mark guide points on the board, run your knife blade along a straightedge placed between rows of center punch marks. Remove a small section of the tape from between each pin location. This is necessary to allow the etchant to separate the pads. If a high speed burr is available, it can be used to cut the pads apart after etching (a much quicker process).

Next, the .125" tape is used to lay out power supply conductors. Run a continuous line of tape along the left side and top of the board and another along the bottom and right side of the board. These separate buses then branch off between the IC columns. Make sure that the pieces of tape overlap tightly where a conductor branches, and that there is sufficient gap between buses. Any area left over may be taped to provide independent conductors for mounting discrete components.

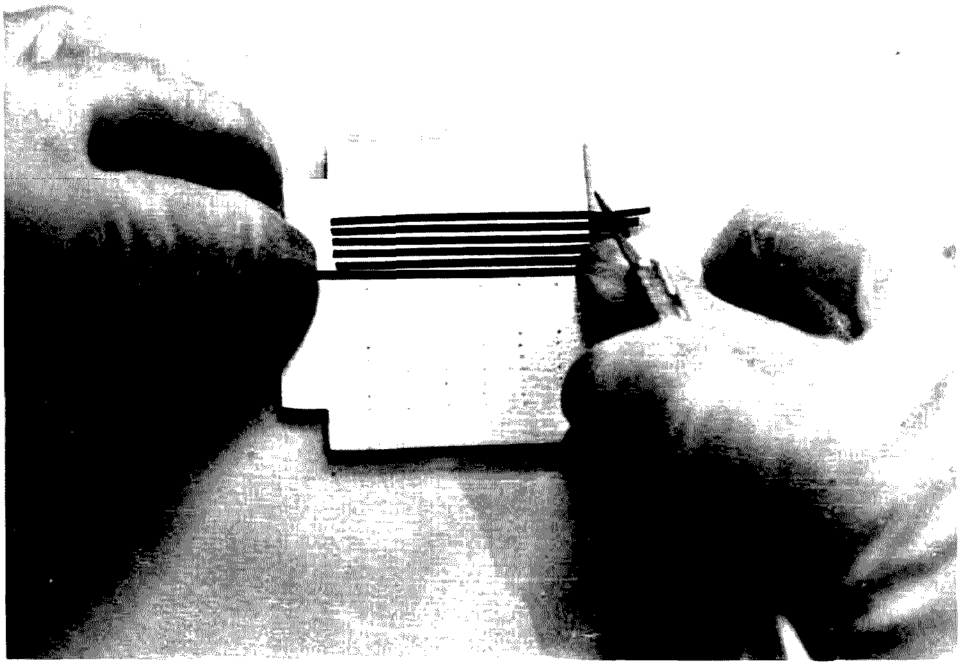

Applying tape to the board. Note rows of center punch marks.

To provide edge connector fingers, tape must be applied to the tongue of the board to exactly match the connector pin spacing. The easiest way to do this is to insert the tongue into the edge connector several times (taking care to remove the connector between insertions). The exact locations of the connector pins will appear as light scratches on the copper. It is only necessary to cover these scratches with tape, and alignment is assured.

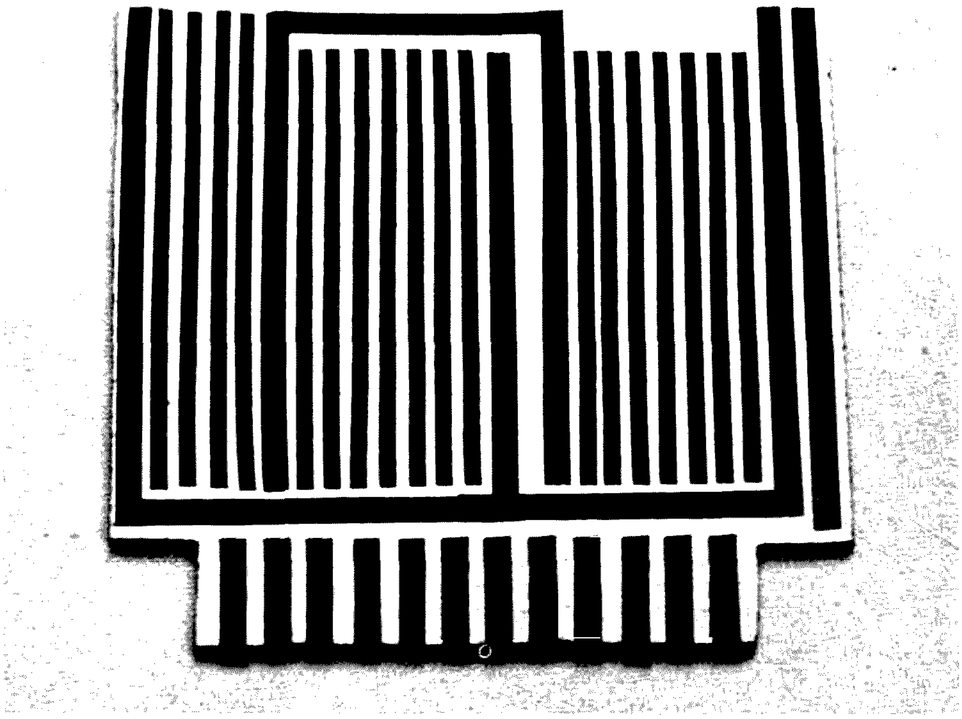

Completely taped board.

Now is the time to etch the board. Enough has been said about this process in other articles to avoid the subject entirely. But I can't help myself. An easy way to agitate the board is to drill small holes in diagonally opposite corners and tie a piece of string to each corner. The board can then be dropped into the etchant, copper down, and moved back and forth and up and down during the etching process. This technique will greatly speed up the process, and enables you to handle the board without getting that damned etchant all over your hands.

After etching, the pads are cut apart with a high speed burr (Dremel). Don't cut too deeply or accidentally cut a

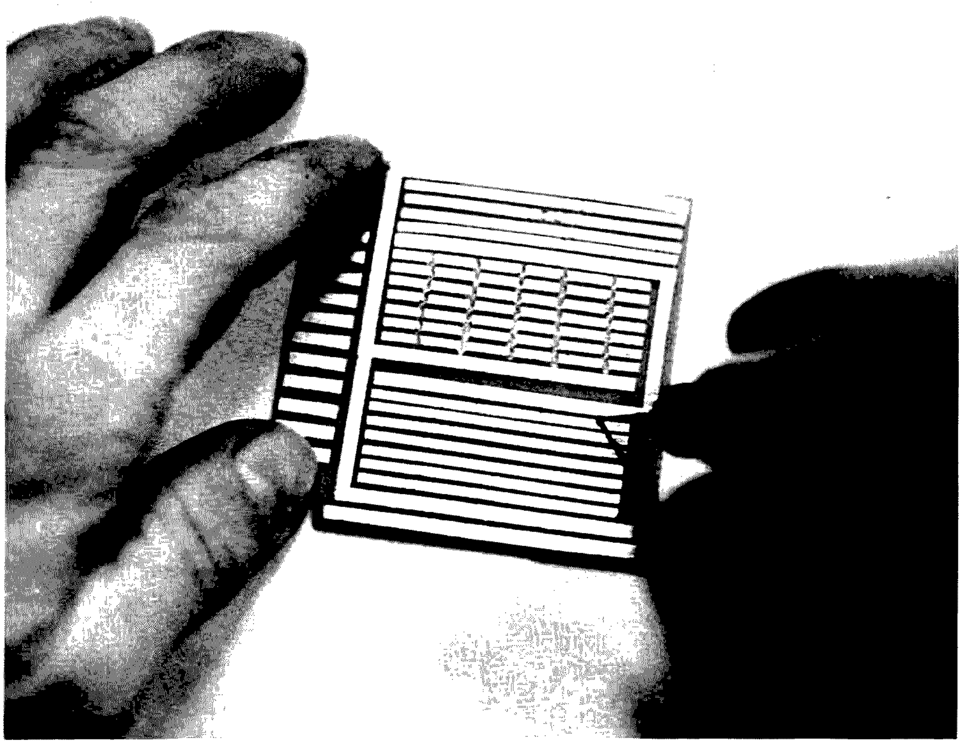

Using the burr to cut the pads apart.

supply bus. The use of the burr takes a little practice, but once you get used to it it's a pretty quick process.

Now comes the most tedious part of the process. Drill all IC pin locations with a No. 65 drill. Insert Molex pins or ICs and solder, tinning the entire pad. Now we've completed what we set out to do.

Wiring

Now that you have a board to mount your ICs on, the only other necessity is a means of connecting them together. For short connections (e.g., Vcc and ground), I use No. 22 tinned solid wire, butt-soldered to the pads. For longer connections, insulation is a necessity. I use No. 24 stranded hookup wire cannibalized from multiline telephone cords. If you need to buy new wire, teflon would be ideal. Since the solder pads are already tinned, it is only necessary to tin the end of a wire and then hold it in place on a pad while applying heat. No additional solder is needed or wanted. Too much solder will only encourage shorts between pads. Wiring can be done neatly, using right angle turns and running the wire only between ICs or running directly point to point. Although the latter method looks pretty bad, it has the advantage of decreased noise pickup from wire to wire, since very few wires run parallel. Besides, it uses less wire.

The extra conductors etched on the board can be used for discrete components. Where a pad for a component is needed, just drill a hole for the component lead and isolate that conductor area by cutting across it with the burr.

The fact that all connectors are hand-wired when using this technique makes changes easy to make. The production cost of this board is much less than that of commercial ones. You can get more components (especially ICs) on this board than on a board with printed wiring, since little room is needed for conductors. And if you can stand the sight of the mess of wiring, the board will make a pretty good finished product. ■

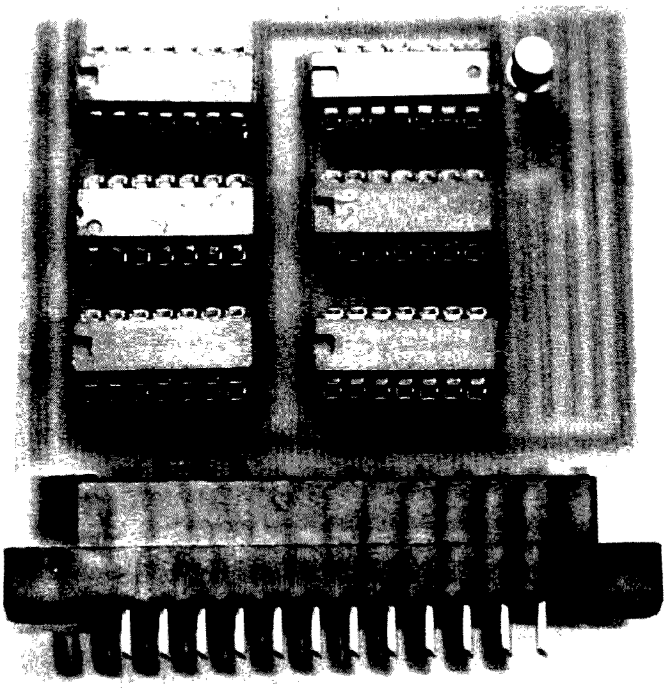

With wiring hidden, board looks almost professional.

Calvin Sondgeroth W9ZTK
800 Fifth Avenue
Mendota IL 61342

More PLL Magic

--like low frequencies for RTTY

This article described a phase locked loop circuit that can be built with a single IC chip. Integrated PLLs are available, but building the loop out of discrete components and IC amplifiers allows for experimentation not possible with the integrated version. In addition, a general discussion of the LM3900 linear amplifier is presented.

This IC contains four identical amplifiers in a 14 pin DIP package. It satisfied the need for an economical op amp device which can operate on a single supply voltage. Those who have struggled with multiple batteries, power supply splitters, etc., will immediately appreciate the advantage of the single power supply feature. And best of all this can be anything from 4 to 36 volts.

A skeleton diagram of the internal amplifier circuit is shown in Fig. 1. Note how this resembles a normal common emitter amplifier rather than the differential stages found in other op amps. With the current mirror circuit at the non-inverting input, single supply operation is possible.

Instead of amplifying voltage differences between the inverting and non-inverting input terminals, this amplifier responds to current differences. The diode between the non-inverting input and ground is actually a transistor with collector and base connected together and the emitter on ground. With IC fabrication techniques, this "diode" transistor and Q1 have almost identical characteristics and track closely over wide temperature ranges. With this situation, it can be shown that the current into the non-inverting input and the collector current of Q1 are equal. Any current I1 flowing into the non-inverting input is "mirrored" about ground and is extracted from the base current for Q2 flowing into the inverting input. If I1 and I2 are equal, the net current into the base

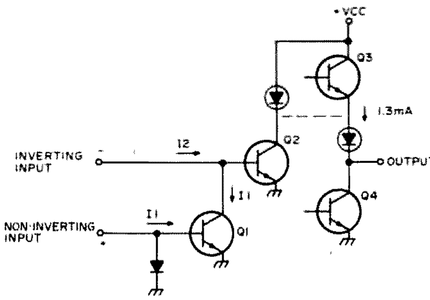

Fig. 1. LM3900 amplifier circuit.

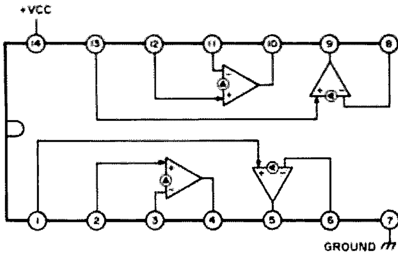

Fig. 2. LM3900 pin connections. Top view of IC.

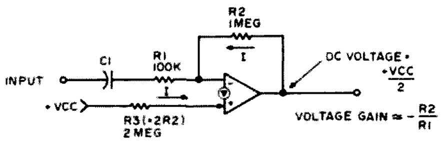

Fig. 3(a). Inverting amplifier.

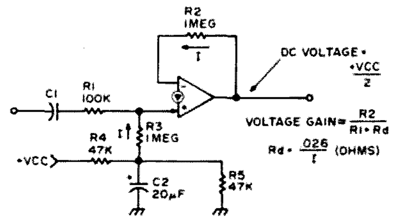

Fig. 3(b). Non-inverting amplifier.

of Q2 is balanced out and current differences between the two terminals are amplified.

As shown, the collector loads for the internal amplifying transistors are current sources. They present high impedance loads for these stages and achieve very high voltage gain. The output stage current is set at about 1.3 mA by its current source. Thus a package of four of these amplifiers draws 5-7 mA idling current. With the internal biasing circuit this current drain is relatively independent of supply voltage.

To provide for amplification with reference to voltages, the input terminals are connected to the signal and bias networks through rather high value resistors, which convert voltage changes into current changes the amplifier can work with. The entire configuration can be thought of as a transistor common emitter amplifier with a very, very high beta and provided with a non-inverting input. As can be seen in the various circuit diagrams, the LM3900 amplifier symbol is drawn with a current source between the input terminals and a current arrow at the non-inverting input. This helps distinguish it from conventional op amp types and also indicates its current differencing type operation. It is sometimes called a Norton amplifier to help make the difference identifiable.

Fig. 2 shows the pin connections for the four amplifiers in a 14 pin IC package. The amplifiers share common biasing circuitry but are otherwise independent for signal paths.

Typical Bias Circuits

An inverting amplifier circuit using the LM3900 is shown in Fig. 3(a). The resistor at the non-inverting input is tied up to the positive supply voltage. Since its value is twice that of the feedback resistor R2 and the currents at the inputs attempt to equalize themselves, the dc potential at the amplifier output biases off at approximately half the dc supply voltage. That is, the same current flows from the output through R2 to the inverting input as from the positive supply voltage into the non-inverting input via its bias resistor. Since R3 is twice the value of R2, the output dc level is half the supply voltage.

Ac signal inputs through the coupling capacitor make the output follow the input with a voltage gain of R2/R1. Note that the output is inverted with respect to the input.

The input bias current required by the IC is extremely small as compared to a regular transistor amplifier. Values as low as 30-50 mA may be used, thus the relatively large value resistors. The normal bias current for the non-inverting input should be limited to something like the 10-100 uA range for optimum operation. Larger values tend to overdrive the current mirror, changing its gain from unity as required to properly mirror the current at the inverting input.

Fig. 3(b) shows a non-inverting amplifier circuit. Note the biasing arrangement here. Again the dc level at the output is set at half the supply voltage. In this case, R2 and R3 are equal, but the bias potential for R3 is at half the supply voltage as determined by the voltage divider R4 and R5. Since the currents (dc) at the input terminals tend to equalize, the output voltage biases off at Vcc/2.

The expression for the voltage gain of the non-inverting amplifier takes into account the impedance of the diode at the non-inverting input. With values in the megohm range for R2 and R3 the effect of Rd is negligible.

For all practical purposes, both amplifiers shown in Fig. 3 have a voltage gain of ten (20 dB). The dc level at the output being halfway between the supply voltage and ground allows for maximum output swing before limiting. The LM3900 has an open loop gain of 70 dB out to 1 kHz and drops off linearly at 20 dB per decade with unity gain occurring at approximately 2.5 MHz. Thus it does not have the extremely high gain of the 741 type of op amp at dc and very low frequencies, but at 1 kHz and above it is about the same. The 3900 is internally compensated for this frequency rolloff characteristic.

With the biasing schemes shown, the LM3900 can be used for any application requiring an op amp. By applying two input voltages through high value resistors, one to the inverting and the other to the non-inverting input, the device functions as a comparator for the inputs. A square wave oscillator is shown in Fig. 4. In this circuit, when the op amp output is at the high level, current flows into the non-inverting input via both 2 meg resistors. When the capacitor charges up to a high enough potential, current flow into the inverting input from this source causes the op amp output to switch over to the low state. With the output low, the effective limiting resistance at the non-inverting input is now 2 megs, cutting its current source in half. As the capacitor discharges and reaches lower voltage level where the current into the inverting input is low enough, the output again switches high and the cycle repeats. By juggling the bias resistor values, different duty cycles can be obtained to produce varying pulse width outputs.

Low Frequency Phase Locked Loop Circuits

The entire loop can be built using one 3900 IC chip, a few resistors and capacitors and one switching transistor.

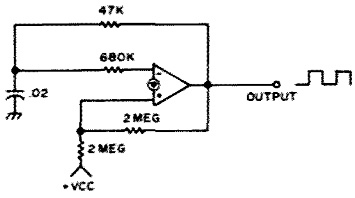

Fig. 4. Square wave oscillator.

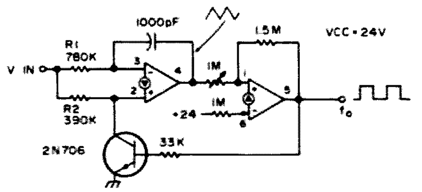

Fig. 5. Voltage controlled oscillator. Note that this circuit has very linear response between 2 and 12 volts.

The main portion of the circuit is involved with the voltage controlled oscillator. A diagram for a vco using two sections of the 3900 is shown in Fig. 5.

The first amplifier in the vco functions as an integrator, and the second is connected as a Schmitt trigger with wide hysteresis to monitor the output level of the first stage. When the Schmitt output is high, the transistor is turned on and diverts current away from the non-inverting input to ground. During this time, the current through R1 into the inverting input causes the integrator output to ramp down toward ground. However, when the lower trip point of the Schmitt circuit is reached, the transistor is turned off, and current into the non-inverting input causes the integrator output to turn around and ramp back up toward the positive supply. Note that the current into the plus input is twice that into the minus input. (R2 is half the value of R1.) With current into both inputs from the source, the effect of current into the plus input overcomes that at the minus since it is twice as large. When the Schmitt circuit flips back over to the other state (high output), the transistor again diverts current from the plus input, and current through R1 takes over making the integrator output again ramp down. And so the process repeats.

The vco circuit alone can be useful and an interesting one to breadboard. With a frequency counter on the output, it becomes a rudimentary form of digital voltmeter since it can be adjusted with the 1 meg pot so that 4 volts input produces 400 Hz at the output, 5 volts gives 500 Hz, etc. The linearity between three and ten volts input is within one half a percent. Not bad for a simple circuit. This curve was run with a supply of 24 volts. Higher values of Vcc are desirable to get good range and linearity. In many applications linearity is only required over a fairly narrow range and this vco will easily do that.

Fig. 6 shows the diagram for the complete phase locked loop. All four amplifiers in the LM3900 are used. U2, U3 and U4 make up the three basic sections: vco, phase detector and low pass filter. U1 is used as an amplifier for the input signal. This stage provides a square wave output swinging over almost the entire supply voltage range. The output symmetry is set by the 10k potentiometer at the input. It limits to square wave output for any input of over a couple hundred millivolts rms. The input impedance is strapped down to about 600 Ohms to make it compatible with typical audio generator and communications receiver outputs.

The vco is the circuit discussed previously. Note that the capacitor in the integrator section is made variable to set the free running frequency. With the high impedance of the LM3900 and the large external resistors, rather small values of capacitance are in order, even for frequencies as low as 1 kHz.

The vco square wave (U4 output) and the limited input signal (U1 output) are applied to U2 which is used as the phase detector portion of the loop. Note that the resistor at the inverting input of this stage is approximately twice the value at the non-inverting input. Thus the signal from the vco tends to take over and control the output of U2. When the input frequency becomes close enough to the oscillator free running frequency, the loop will lock onto the incoming signal and remain in lock for frequency variations within the lock range. The capture and lock ranges are set primarily by the values of RC in the single low pass filter section. Experimentation is in order here as well as in other parts of the circuit.

Once the loop is locked to the incoming signal, the vco frequency and the input frequency are identical except for a slight difference in phase. It is this phase difference which keeps the loop in lock by applying a dc output from the low pass filter to control the vco frequency. Fig. 6 shows the situation for a phase difference of 90 degrees between the outputs of U1 and U4. With these inputs, the output of U2 can only go to the low state during the time the input signal is high and the vco is low. Otherwise the vco signal takes over and drives the output back high due to the 2X difference in input resistors. The average dc level at the output of U2 shown in Fig. 6 is about 3/4 Vcc.

The RC low pass filter smoothes out the U2 output to drive the vco input. If the input frequency changes, the resulting phase change will cause the phase detector output to drive the vco such that it follows the input signal. As the resulting phase differences approach zero degrees and 180 degrees, the vco drops out of lock with the input. During lock the phase detector output will be somewhere between 1/2 Vcc and Vcc. A little study of the phase diagram in Fig. 6 should help clarify this. The important point in understanding loop operation seems to be grasping the fact that it locks onto an incoming signal by virtue of a phase difference between input and vco such that the phase detector dc output is right to make the vco frequency equal to the incoming frequency.

By applying the input signal to the vertical channel of an oscilloscope and U4's output to the horizontal channel, locking can be observed as the input

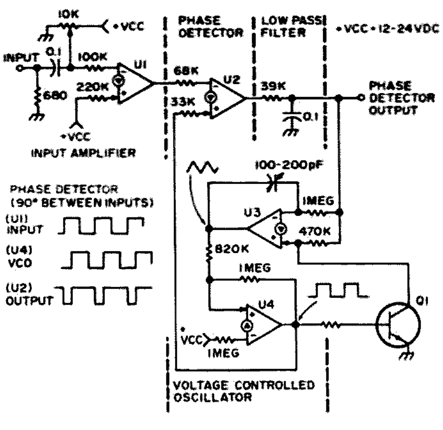

Fig. 6. Phase locked loop using the LM3900.

frequency is swung into the capture range of the loop. Then, as the frequency is varied within the lock range, the Lissajous pattern indicates the phase difference while still maintaining lock. This scope presentation is worth a thousand words while breadboarding the circuit. During lock, the scope display is steady as a rock.

Depending upon the values used in the low pass filter, the lock and capture range can be varied somewhat for specific applications. The values for the circuit in Fig. 6 are suitable for a center frequency of 2200 Hz which is adjustable by the variable capacitor in the vco. Initially, out of lock the loop captures over a range of about 1900 Hz to 2450 Hz. Once in lock, it will maintain lock over a wider range, approximately 1550 Hz to 2900 Hz.

RTTY enthusiasts will note that this frequency range includes the normal tones used in that mode. The dc output variations at the low pass filter are rather small with a 170 Hz shift in frequency, but adequate to drive an IC comparator stage. This makes a single terminal unit with the addition of some sort of keying circuit for the TTY selector magnets. Additional filtering of the low pass filter output is required before driving the comparator to eliminate false triggering of the slicer stage. Other than actually driving a printer with this circuit, no further work was done on a terminal unit for RTTY.

Hopefully, this article will be of interest to those interested in experimenting. The LM3900 itself is so useful in all sorts of applications that after playing with the phase locked loop circuit, the IC can be put to good use in any number of ways. Most of the ads feature this chip for about a half dollar, so getting a few to try is certainly worth the small investment. ■

Roger C. Galbraith WA3TCO
RD #2 Box 93-2
Guys Mills PA 16327

The Logic Grabber

--selected interval logic tracer (S.I.L.T.)

A

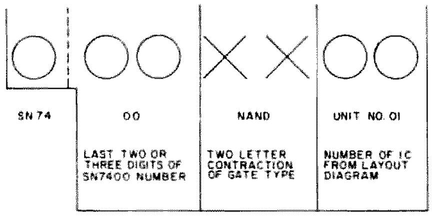

B

SN7400 Number	Gate Type	Code (assume 1st unit in diagram)
SN7400	NAND gate	00ND01
SN7402	NOR gate	02NR01
SN7404	Hex Inverter	04HX01
SN7408	AND gate	08AN01
SN7410	NAND gate	10ND01
SN7420	NAND gate	20ND01
SN7430	NAND gate	30ND01
SN7442	BCD to decimal decoder	42BD01
SN7473	JK flip flop	73FF01
SN7475	Bistable latch	75LH01
SN7489	RAM	89RM01
SN7490	Decade counter	90DC01
SN7493	Binary counter	93BC01
SN74107	JK flip flop	107FF01
SN74150	Multiplexer	150MX01
SN74195	Shift register	195SR01
SN74200	RAM	200RM01

Table 1. (a) Coding method. Code is typed or printed on masking tape and applied to bottom of ICs. This saves much referencing to the layout diagram and helps avoid wiring to the wrong IC. (b) Suggested list of codes.

The logic probes which are described in amateur radio magazines today are what I call static logic probes. That is, they require that the logic levels they are checking not change at all during the measurement period, or at least not so fast that the eye cannot follow. This is fine for simple low speed circuitry, but won't work well for complex or high speed circuits.

I would describe the S.I.L.T. unit, however, as a dynamic logic probe, as it allows one to make logic level measurements on the most complex and high speed digital logic circuitry one would expect to find in any ham shack. It will do this even while the circuitry is in normal operation. Time periods no longer than 20 or 30 nanoseconds may be "frozen" out of any longer period of time and examined

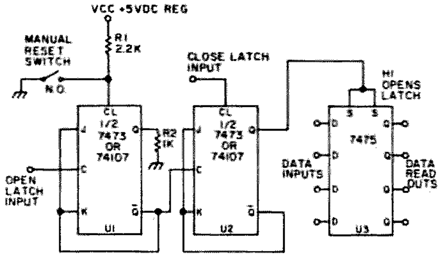

Fig. 1. The basic S.I.L.T. circuit. R1 makes certain that the U1 "CL" input is positive enough to enable U1. R2 is used to satisfy TTL rules and may be replaced by a TTL input or LED readout load.

at your leisure for proper pulse coincidence, absence of proper pulse at a specified time, presence of a wrong pulse, etc. This enables the home brewer to determine if his digital logic project is working properly, or to trace any troubles that may crop up in a particular digital logic project.

In this article I will attempt only to describe the heart of the S.I.L.T. unit. The variations that any particular user may want to include with this unit are unlimited, and determined by the type of use to which he intends to put it. You might compare it to a basic meter movement or a cathode ray tube, and the thousands of different uses they may be put to.

In the cases of very complex and/or high speed digital circuits, the S.I.L.T. can take the place of the much more expensive triggered sweep scopes in most amateur applications. The S.I.L.T. cannot, however, display waveforms. It can only tell you if a particular logic state (high or low) is present at any given instant of time – a very useful bit of knowledge, if you think about it.

Fig. 1 shows the basic S.I.L.T. unit. It uses two very common ICs. One is the 7475 quad bistable latch, and the other is the 7473 or the 74107 dual JK flip flop. The only difference between the 7473 JK flip flop and the 74107 JK flip flop is the pin basing diagram. In the 7473, Vcc is pin 4 and ground is pin 11. In the 74107, Vcc is pin 14 and ground is pin 7. Since the other pin connections are also different, I would suggest that when ordering these from your supplier you ask for a data sheet for the units you are getting. As far as electrical and logical operation go, the 7473 and 74107 are identical. For some unknown reason the difference between their prices

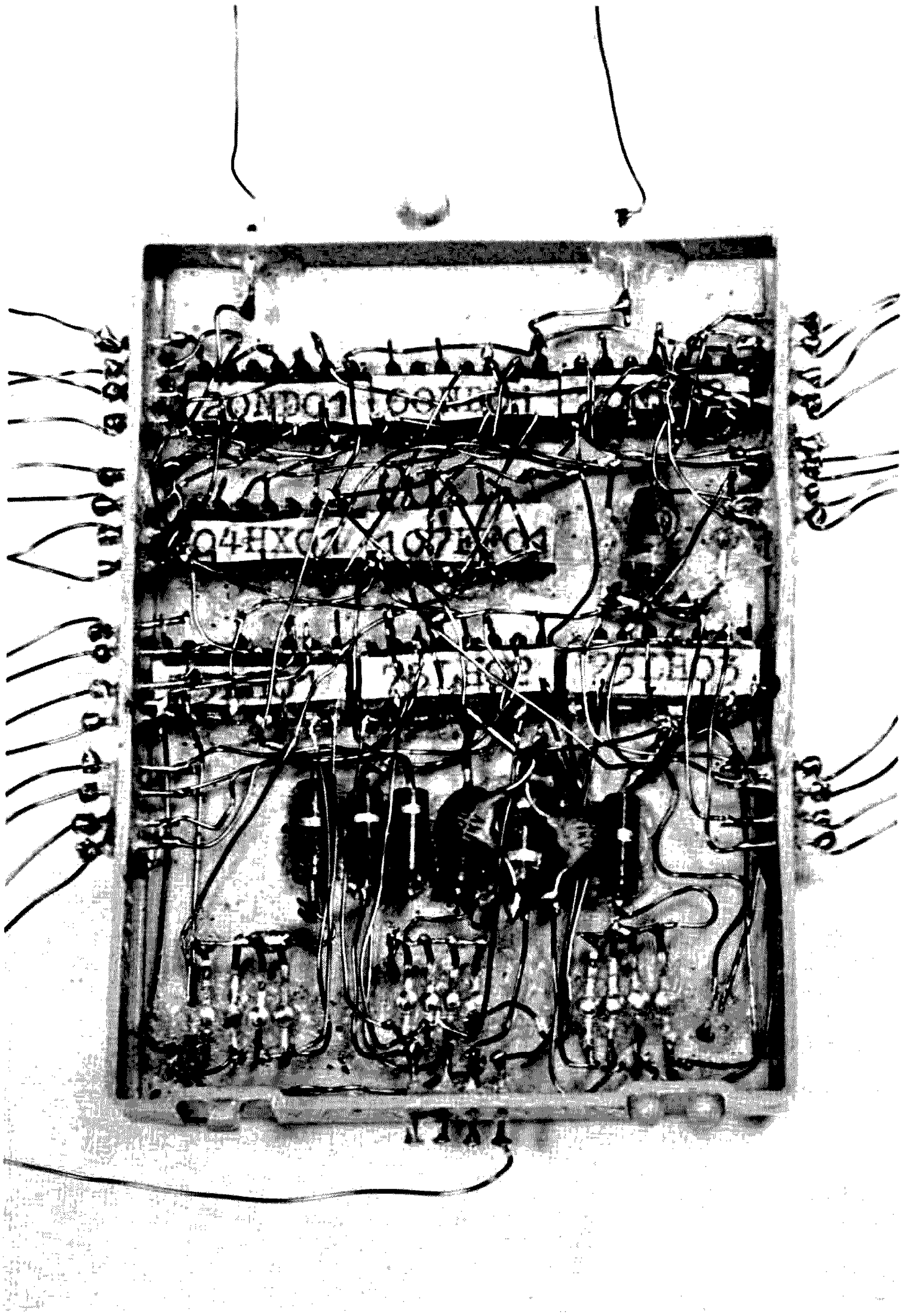

varies from one supplier to the next.

Circuit Theory

Before I discuss the operation of this circuit, let me review the operation of the two ICs. The outputs of the JK flip flops will toggle (or shift) logic states at each negative going (high to low) transition of the logic level (at the "C" or "clock" input) *only* if two other logic situations are satisfied. First, the "CL" or "Clear" input logic level must be high. Second, the "J" and "K" inputs must also be at a high logic level.

If the "CL" input is a logic level low, the flip flop will clear and the outputs will be forced to a reset state. That is, the Q output will be forced to a low logic state and the $\bar{Q}$ output will be forced to a high logic state. Logic level transitions at the "C" input will have no effect on the outputs while "CL" is low.

If the "CL" input is high and both the "J" and the

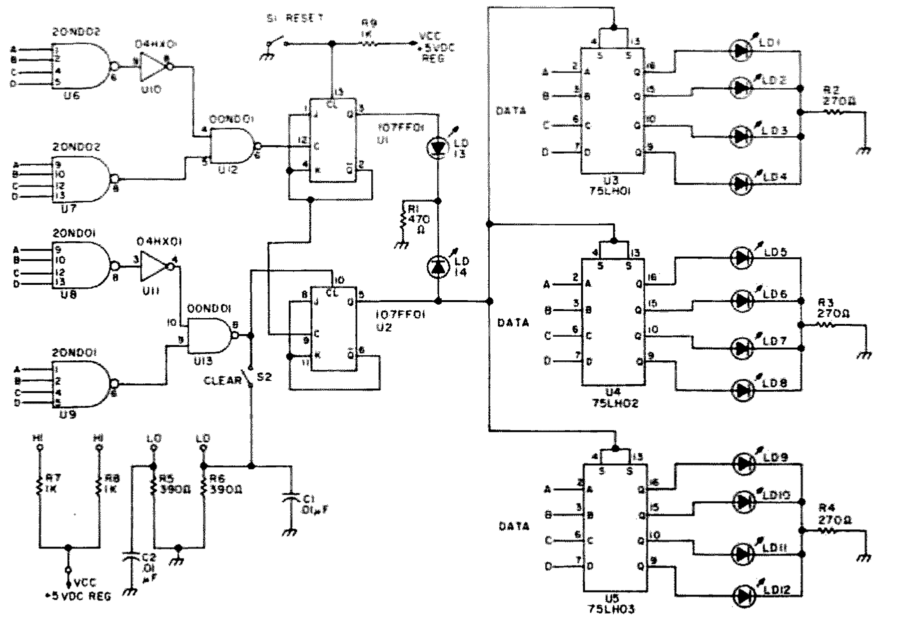

Fig. 2. The D.S.I.L.T. circuit. C1 and C2 are used to provide a direct ground for logic pulses. VCC and GND connections to ICs are not shown, but should be bypassed with at least .001 uF caps. Resistors are ½ or ¼ Watt.

"K" inputs are low, logic transitions at the "C" input will also have no effect on the output. However, unlike a "CL" logic low condition, the outputs will not be forced to a certain logic state, but will hold whichever logic state they had before the "J" and "K" inputs went low.

The "S" or "Strobe" inputs of the 7475 quad bistable latch work in a manner reminiscent of the "J" and "K" inputs of the JK flip flop. Some call this input "C", or "Clock." When the "S" inputs are at a high logic level, the "Q" outputs will reflect exactly the logic levels of their respective "D" inputs. When the "S" inputs go to a low logic level, the data present at the Q outputs is frozen and, even though the "D" inputs' logic levels may change, the data at the "Q" outputs will remain until the "S" inputs go to a high logic level again. It is worth noting that this IC also has the complementary $\bar{Q}$ outputs.

With all of this in mind, I will now go into the operation of the basic S.I.L.T. unit. If the "CL" input of U1 in Fig. 1 is grounded or at logic level low, the outputs will be a low at Q and a high at $\bar{Q}$. If the "CL" input is then ungrounded, it will be pulled up to a high level through resistor R1. Now, since $\bar{Q}$ is still high and it is connected to the "J" and "K" inputs, the flip flop is enabled. A low to high transition on the "C" input will have no effect, but a high to low transition on "C" will toggle the flip flop. The Q output will become high and the $\bar{Q}$ output will become low. Since the "J" and "K" inputs are tied to the $\bar{Q}$ output, they will also be low, and, as I said earlier, this disables the flip flop but does not reset the outputs. Any further activity at the "C" input is ignored by the flip flop. U1 is effectively latched up until a low is applied to the "CL" input.

The U1 $\bar{Q}$ output is also tied to the "C" input of U2. For the moment, let's assume that a high logic level is present at U2's "CL" input, and that U2 has been reset. That is, U2's outputs are Q = low and $\bar{Q}$ = high. Now U1 is tripped as described in the last paragraph and its $\bar{Q}$ logic level drops from high to low. Since this output is also tied to U2's "C" input, the high to low transition trips (or toggles) U2. Also, since U2's $\bar{Q}$ is tied to its "J" and "K" inputs, U2 also latches up just as U1 did. Again, U2 won't reset until its "CL" input goes low.

Since the switch used to ground U1's "CL" input is a manual normally open pushbutton, U1 won't be reset until you want it to be. U2's "CL" input is a test lead, just as U1's "C" input is. Now if I connect U2's "CL" input to a timer, I can cause U2 to reset at any time I choose after U1's "C" input has been tripped. More on this timer later.

Once U2 has been tripped and its $\bar{Q}$ output has gone low, its Q output will go high. Since this is tied to the "S" inputs of the 7475 quad latch, the Q outputs of this latch will follow any data present on the "D" inputs. At that instant of time I selected after U1's "C" input was tripped, a logic level low pulse hits U2's "CL" input and U2 is reset, U2's Q output goes low, and U3's Q outputs freeze on whatever data was present at that instant.

In my own S.I.L.T. units I use LEDs for reading out the data frozen at the outputs. Other readouts might be a VOM, VTVM, BCD to decimal decoder with numeral readout, etc. This will depend on your application. Once you have recorded the data from the outputs, you can hit the reset button and another reading can be taken, or you may want to move your "D" inputs and/or U1 "C" and/or U2 "CL" inputs to other points in the circuit.

Those who have built digital frequency counters will recognize this circuit, since it is the same as the hold latches in a counter. One difference is my method of using flip flops, and the idea of using this circuit as a test instrument.

Yes, the S.I.L.T. unit is very simple, but its uses are almost limitless. Fig. 2 is one example of how I first used the S.I.L.T. principle. This unit is a "Dependent" or D.S.I.L.T. I call it "dependent" because the basic S.I.L.T. unit depends on timing pulses from within the digital unit under test to reset the U2 flip flop.

The operation of U1, U2, and U3 is the same as in Fig. 1. U4 and U5 are also 7475s and are added to the Q output of U2 so that three times as much data can be displayed for each test. LEDs LD-1 through LD-14 are common red mini-LEDs. LD-1 through LD-12 are readouts for the quad latches, and LD-13 and LD-14 are used to keep track of the switching conditions of U1 and U2.

If U1 is reset and Q is low, LD-13 will be off. When U1 is tripped, Q goes high and LD-13 lights to let you know U1 has been tripped. When U2 is tripped, Q goes high

and LD-14 lights. When U2 is reset, Q goes low and LD-14 goes out. R1-R4 are current limiting resistors for the LEDs. Switch S1 is the reset switch. Switch S2 is used to reset U2 in case a low pulse does not arrive at U2's "CL" input.

U6 through U9 are 7420 four input NAND gates. The inputs to these gates may be connected in various ways to the circuit under test so that a selected number of *coincident* pulses will trigger the appropriate response from U1 or U2. Unused inputs may be tied to the appropriate resistor-driven high or low terminals.

U10 and U11 are 7404 hex inverters which invert the outputs of U6 and U8. Their outputs, along with the outputs of U7 and U9, are fed to the inputs of ICs U12 or U13, which are 7400 dual input NAND gates.

My purpose in building the D.S.I.L.T. was to aid in troubleshooting a digital VFO that I have in design. You may not need as many as three latches, or you may require more than three. Also, the inputs may vary to suit your needs. Many methods of construction may be used. I offer my method only to give you some ideas.

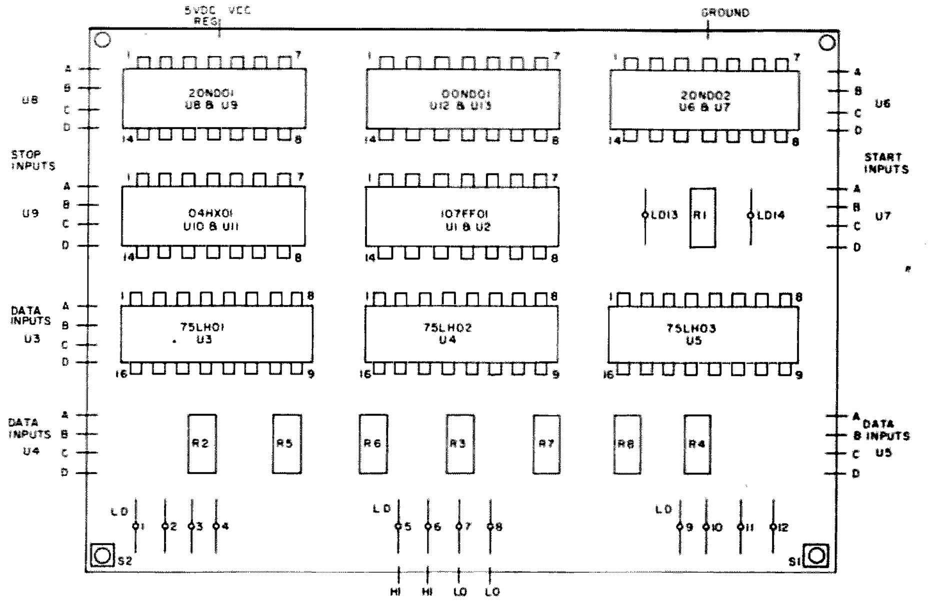

Fig. 3. D.S.I.L.T. layout is very handy for wiring and later troubleshooting. All parts except wiring and capacitors are shown. Caps should be disc types and lie flat across IC pins.

Construction

The first step in the construction process is to choose a wiring method. Printed circuit board is by far the best choice. I didn't choose it because I hadn't had much success with those tenth of an inch IC pin spacings, and also because usually, as soon as I finish etching a PC board, I decide to make a circuit change. Uses for the D.S.I.L.T. are so variable and changing that it may never be put on PC board at this station.

Another choice is perfboard, with molex IC socket pins. I've used this method, but it seems that when more than two ICs are used, a short almost always develops somewhere.

IC sockets are an excellent choice if you don't mind having more invested in sockets than in ICs.

The method I finally chose was a variation of the methods described in a *Ham Radio* article.[1] First, I decided on a layout (see Fig. 3). Then I chose a plastic box of proper size. Next, silicone rubber sealer was applied to the top of an IC and the IC was placed upside down in the bottom of the box so that its legs were pointing upward. Be cautious that you position pin 1 of each IC in the same direction each time, or you'll have trouble identifying the pins. All other parts, LEDs, resistors, and ICs were mounted using this method. If a part needs to be replaced, it is easy to pry it up and "glue" in another.

If you tip a couple of ICs upside down on a tabletop, you will soon discover that if you don't already know the IC number, you've got a problem. Not so. Type the number on a small strip of masking tape. Cut and trim the tape to size and apply it to the bottom of the IC. Better yet, use the coding system shown in Table 1.

The wire I used is #26 Beldsol enamel. It has an insulation that melts off when a high temperature soldering iron is applied to it. Don't worry if you should accidentally touch the wire with the soldering iron. The insulation doesn't come off that easily. Neatness in wiring, in this case, is an invitation to disaster. Direct point-to-point wiring is preferred. *Do not* bundle your wires, as these bundles are fair to excellent transformers for digital pulses. Use extra heavy wiring or copper strapping for the B+ and ground wiring, not so much because of high current requirements, but to cut down the impedance to high frequency square waves.

Using this system with seven or eight ICs, I soon found that wiring errors are next to impossible to avoid. So I developed an idea similar to that used in kit construction. First, I developed the code shown in Table 1. Then, using the pin numbers shown in Fig. 2, I made up the charts shown in Table 2. Following this table I made no wiring errors and the unit worked fine the first time.

I used common pins cut off to about three eighths of an inch lengths to run the wiring through the side of the plastic box. Common pins that are attracted to a magnet seem to take solder best. Again, silicone rubber sealer holds these firmly in place. You have several choices for the other end of your test leads. A large or small alligator clip will allow you to make simultaneous contact with no fewer than two IC pins. This is not exactly what I had in mind. One good choice is the GRABBER Model #3925 mini test clip.[2] This, in my opinion, is the best choice, but for units with as many data and trigger input leads as my D.S.I.L.T., these clips could make up a large percentage of the cost.

The choice I made was to use about two feet of #26 Beldsol wire for each lead and to solder the test lead directly into the circuit under test. This sounds like a nightmare, but it really is very easy — especially on the solder side

20ND01

Pin	To Pin
1	U8/A
2	U8/B
3	BLANK
4	U8/C
5	U8/D
6	9/00ND01
7	GND
8	3/04HX01
9	U9/A
10	U9/B
11	BLANK
12	U9/C
13	U9/D
14	VCC

00ND01

Pin	To Pin
1	NC
2	NC
3	NC
4	8/04HX01
5	8/20ND02
6	12/107FF01
7	GND
8	10/107FF01
9	6/20ND01
10	4/04HX01
11	NC
12	NC
13	NC
14	VCC

20ND02

Pin	To Pin
1	U6/A
2	U6/B
3	BLANK
4	U6/C
5	U6/D
6	9/04HX01
7	GND
8	5/00ND01
9	U7/A
10	U7/B
11	BLANK
12	U7/C
13	U7/D
14	VCC

04HX01

Pin	To Pin
1	NC
2	NC
3	8/20ND01
4	10/00ND01
5	NC
6	NC
7	GND
8	4/00ND01
9	6/20ND02
10	NC
11	NC
12	NC
13	NC
14	VCC

107FF01

Pin	To Pin
1	2/107FF01
2	*3
3	LD13
4	2/107FF01
5	*7
6	*2
7	GND
8	6/107FF01
9	2/107FF01
10	8/00ND01
11	6/107FF01
12	6/00ND01
13	SW1
14	VCC

75LH01

Pin	To Pin
1	NC
2	U3/A
3	U3/B
4	5/107FF01
5	VCC
6	U3/C
7	U3/D
8	NC
9	LD4
10	LD3
11	NC
12	GND
13	5/107FF01
14	NC
15	LD2
16	LD1

75LH02

Pin	To Pin
1	NC
2	U4/A
3	U4/B
4	5/107FF01
5	VCC
6	U4/C
7	U4/D
8	NC
9	LD8
10	LD7
11	NC
12	GND
13	5/107FF01
14	NC
15	LD6
16	LD5

75LH03

Pin	To Pin
1	NC
2	U5/A
3	U5/B
4	5/107FF01
5	VCC
6	U5/C
7	U5/D
8	NC
9	LD12
10	LD11
11	NC
12	GND
13	5/107FF01
14	NC
15	LD10
16	LD9

*Table 2. D.S.I.L.T. wiring tables from all ICs to their connections. This takes care of all major wiring except for some resistor and switch hookups. The numbers preceded by an * indicate the "fanout" required from an output with more than one connection. Thus, pin 2 of the 107FF01 goes to 3 inputs. Pin 5 of the 107FF01 goes to 7 inputs, which is close to maximum (about 10 TTL loads in most cases). NC means no connection. BLANK means that the IC has no internal connection on that pin.*

of a PC board. A Wald portable soldering iron is a great help, but is not necessary.

The power for the D.S.I.L.T. is robbed from the unit under test. Bypassing is the word to worship here. I bypass every IC with a .001 capacitor.

Switches S1 and S2 are unique. Manufactured switches are (a) expensive, (b) massive, and (c) unnecessary. I built my own SPST switches. First, two pieces of tin or copper are cut to one quarter inch squares. Then, using a center punch, a dimple is made in the center of each piece. A one sixteenth inch hole is drilled through the bottom of the plastic case in one corner. The two wires, one from ground and the other from U1's "CL" pin, are passed through this hole. Either wire is soldered to the dimpled side of one of each of the two squares of metal. Next, one wire is pulled back through the hole until the metal lies flat against the hole (with the bump in the metal facing away from the bottom surface). The metal is held in place by, you guessed it, silicone rubber sealer. Be careful not to get any sealer on the exposed surface of the metal.

Now, before the sealer hardens, the other wire is pulled back through the hole until the other square of metal can be positioned about one sixteenth of an inch above the other and be held there by just the stiffness of the wire supporting it. The bumps on the two squares should be facing each other and almost touching. Apply silicone rubber sealer around the metal pieces, being very careful not to force sealer between the two pieces. The finished blob of sealer should look similar to the little sample the sealer company puts on its cartons to demonstrate its qualities.

This entire procedure should be repeated on another corner of the box, using a wire from U2's "CL" pin and a wire from a resistor-driven logic low terminal. Also, blobs of sealer should be put on the remaining two corners of the case. Once this sealer sets up, these serve as excellent nonskid feet for the D.S.I.L.T. When a corner of the box with the switch in it is depressed, the two pieces of metal are forced together. Releasing the case allows the elastic qualities of the sealer to pull the metal pieces apart.

This simple switch saves much space and money. It also leaves several of my ham friends scratching their heads and wondering where the switch is. Most of these ideas come from trying to do something with as little as possible. They may seem weird, but the fact that they work is all that matters.

I would say that if you understand the logic of the D.S.I.L.T., you can probably use it properly on any logic circuit you *understand.* You may even be able to use it to figure out some logic schemes that you are not sure of.

If you are just starting to study logic circuits, however, I suggest you use the simpler static logic probes before building an S.I.L.T. type unit. Although the D.S.I.L.T. is a very simple circuit, its use does require complex logic. ■

References

[1] "Six Meter Frequency Synthesizer," W1KNI, *Ham Radio,* March, 1974, pp. 27-28.

[2] Pomona Electronics, 1500 E. Ninth St., Pomona CA 91766.

Frank Kelly W2IAT
49 Knollwood Ave.
Huntington NY 11743

Global Calculations for the DXer

--using a hand calculator

Have you ever wondered how far away that DX location was? Maybe you've even been curious enough to try measuring the distance from a map – and have found that it can't be done very well. Most maps are either too small to measure on accurately, or have inaccurate distances (this is the case for the common Mercator projection), or both. But if you have a pocket calculator and know your latitude and longitude, you can crank out an accurate distance to any place in the world, within a tolerance of a few miles, in a very short time. You don't need pencil and paper, and your calculator need not be a $700 programmable beauty, either. Mine cost $59, and like many under-a-hundred dollar units, it does the job nicely.

What is essential is that the calculator handle trig functions – sines and cosines – and their inverses. A memory register is also useful, although not essential. This means the calculator needed is one step up from the simple four function types that are the cheapest. However, there are many units that list for $100 or under (and sell for much less) that will fill the bill. Included among these are the APF Mark 20 (which I used to work the examples below), the Rockwell 63R and 61R, the Sears ESR, Unitrex 80SR, Novus Math, Casio FX-10, Heath IC-2000 (a kit), and even the Sinclair Scientific (which I've never seen, but understand is listed for only $50). If current calculator discounting practices are any guide, you ought to be able to get this one in trade for a pair of 807s and an old modulation transformer!

Of course, the calculation can also be done, and very efficiently, with a machine like an HP-35 or HP-45. The primary difference is that these machines use Reverse Polish Notation (RPN) which involves a slightly different keying sequence. The mathematics is, of course, exactly the same as given below.

The basic task is to solve for one side of a spherical triangle, given the other two sides and the angle between them. What may be a bit confusing, if you look this up in a reference on navigation such as Bowditch's *Practical Navigator*, is that the *lengths* of the sides of the triangle are stated in degrees in the formula – degrees as seen from the center of the earth. Here's the standard formula:

$$\cos c = (\cos a)(\cos b) + (\sin a)(\sin b)(\cos C)$$

where the quantities are as shown in Fig. 1. Point A is your QTH, point B is the distant location and point C is the north pole.

Solving this can take a lot of key punching, even with a machine to look up sines and cosines for you. And the answer comes out in degrees on the earth's surface, which requires a further conversion. The final blow is that, although a, b and C are angles in degrees, none of them is directly a latitude or longitude. You'll appreciate why in the past this type of figuring went on mainly on ships where position changes slowly. Aircraft navigation generally ignores lats and lons except if an inertial or VLF navigator is aboard, and those gadgets contain a lot of computer.

For our ham purposes, however, the formula can be

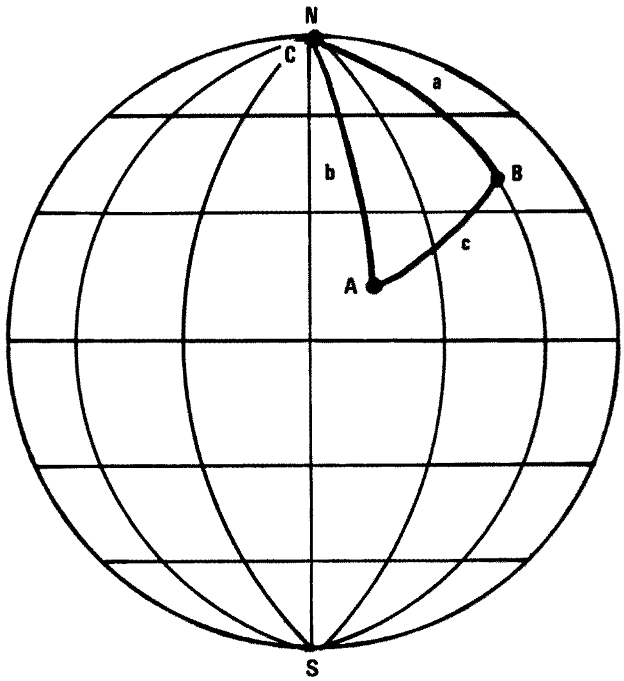

Fig. 1. The spherical triangle.

KEY STROKES	DISPLAY SHOWS	WHICH IS
(1) [=] [6] [0] [=] [7] [3] [=]	77	the angle C
(2) [F] [COS x]	0.224951	cosine 77°
(3) [M +] or [x ← M]	0.224951	cosine 77° stored
(4) [6] [1] [F] [COS x]	0.48481	cos 61°
(5) [X] [MR] [=]	0.1090584	cos 61° x cos 77°
(6) [X] [·] [7] [6] [6] [2] [=]	0.0834515	(.7652) (cos 61°) (cos 77°)
(7) [x ← M]	0.0834515	all above stored
(8) (Clear calculator, but not the memory.)		
(9) [6] [1] [F] [sin x]	0.874619	sin 61°
(10) [X] [·] [5] [5] [4] [5] [=]	0.5722638	.6543 sin 61°
(11) [+] [MR] [=]	0.6557152	(all)
(12) [F] [cos-1 x]	49.02608	c in degrees
(13) [X] [6] [6] [·] [1] [6] [=]	3390.1534	d

Table 1.

simplified considerably. The first thing to do is to prefigure two constants from your home latitude: K_1 = cos b and K_2 = sin b. If you're in the northern hemisphere, side b of the triangle is 90° minus your latitude. Huntington, Long Island, New York, where I live, is at 40° 52' north latitude, so for me

$$K_1 = \cos b = \cos (90 - 40^\circ 52') = \sin 40^\circ 52' = .6543$$

and

$$K_2 = \sin b = \sin (90^\circ - 40^\circ 52') = \cos 40^\circ 52' = .7562$$

I plug these two numbers into the formula. They never change, so why recompute them every time? Now we have

$$\cos c = (K_1)(\sin \mathrm{LAT_D}) + (K_2)(\cos \mathrm{LAT_D})(\cos C)$$

Notice that in rewriting the formula I've changed cosines to sines and vice versa so that latitudes can be used directly.

That angle C is the *difference* between your longitude and $\mathrm{LON_D}$, the longitude of your destination. Simple enough; just subtract the larger longitude from the smaller in most cases. What can trip you up is if you're on one side of Greenwich and the distant point is on the other. In that case you add. Three examples should make this clear:

(1) Huntington, N.Y. (73° 19' W) to Honolulu, Hawaii (157° 55' W).

$$C = 157^\circ 55' - 73^\circ 1.9'$$
$$C = 84^\circ 36'$$

Always subtract the larger from the smaller. What you want is a positive number of degrees.

(2) Huntington, N.Y. (73° 19' W) to Moscow, U.S.S.R. (37° 40' *E*)

$$C = 73^\circ 19' + 37^\circ 40'$$
$$C = 110^\circ 59'$$

If this addition comes out to be more than 180 degrees, you've got the long path. Subtract the result from 360 and call *that* C.

(3) Huntington, N.Y. (73° 19' W) to Tokyo, Japan (139° 28' E).

$$C = 73^\circ 19' + 139^\circ 28' = 212^\circ 47' \text{ (too big)}$$
$$C = 360 - 212^\circ 47'$$
$$C = 147^\circ 13'$$

I've rearranged the standard formula for easier use and to come out with an answer in statute miles. The final version is:

$$d = (69.15) \cdot \left\{\cos^{-1} [(K_1)(\sin \mathrm{LAT_D}) + (K_2) \cdot (\cos \mathrm{LAT_D}) \cos (\mathrm{LON_D} \pm \mathrm{LON_H})]\right\}$$

That's still a pretty formidable formula, but it can be worked through without memory stacks or parentheses keys, and without ever needing a pencil and paper (assuming you have a memory in your calculator). The secret is to have this formula, with your two constants already in it, posted in front of you. START INSIDE THE PARENTHESES AND WORK BACKWARDS. Here's how I work an actual example with my calculator, which, like many, has an "F" button to shift the keys from numbers to functions – like sin x, $\sin^{-1}$ x, etc. The two end points are my QTH ($\mathrm{LON_H}$ = 73°) and Anchorage, Alaska ($\mathrm{LAT_D}$ = 61° N, $\mathrm{LON_D}$ = 150° W). I've rounded off Anchorage's coordinates to even degrees. Do this. It saves keypunching, and the maximum error you'll ever get is 35 miles. Big deal.

The calculation we're going to do is:

$$d = (69.15) \cdot \left\{\cos^{-1} [(.6543)(\sin 61) + (.7562) \cdot (\cos 61) \cos (150-73)]\right\}$$

(Clear the calculator completely, and follow the steps shown in Table 1.)

So the distance from Huntington, N.Y. to Anchorage, Alaska is about 3390 miles. Using the minutes and seconds of coordinates as close as I can find them gives 3329 miles. I don't find the difference very significant.

Here's the formula for Huntington, N.Y. to Paris, France, which is on the other side of the Greenwich meridian at $\mathrm{LAT_D}$ = 48.52°N, $\mathrm{LON_D}$ = 2.2°*E*:

$$d = (69.15) \cdot \left\{\cos^{-1} [(.6543)(\sin 48.52) + (.7562) \cdot (\cos 48.52) \cos (73.32 + 2.2)]\right\}$$
$$d = 3596 \text{ miles}$$

The above works for any two points in the northern hemisphere, and can go quite fast.

With your personal version of the formula in front of you, you can run through the calculation (with no goofs) in under two minutes. If, during a phone QSO, someone will give you his latitude and longitude, you can do the whole thing while he's telling you about his super whizbang beam antenna, and get back to him with what we might call the QTD – the distance spanned by the QSO.

What about the southern hemisphere? After all, there are a lot of countries south of the equator. No problem, really: We just need a slight change in the formula. It becomes:

$$\mathrm{QTD} = (69.15) \cdot \left\{\cos^{-1} [(-K_1)(\sin \mathrm{LAT_D}) + (K_2) \cdot (\cos \mathrm{LAT_D}) \cos (\mathrm{LON_H} \pm \mathrm{LON_D})]\right\}$$

The only difference between this formula and the previous one is that minus sign before "K_1 (sin $\mathrm{LAT_D}$)." It can easily be handled if your calculator has a "change sign" key. Just hit it at the end of line 10 in the step-by-step example. Using this for Huntington to Rio de Janeiro, Brazil (LAT = 22.54 *S*, LON = 43.15 W), I get a distance of 4794 miles.

There you have it – a fairly simple method to tell you your distance from any place in the world. If you really get hooked on this game as I have, you might consider owning *The International Atlas* by Rand McNally. It lists 160,000 places in the world alphabetically with their latitudes and longitudes. I'm looking forward to the day when I can work the ultimate in DX. For me that's Augusta, in Western Australia, lat. 34.19 S lon. 115.10 E, distance from my QTH – 11,794 miles. Of course, if I could somehow arrange to work somebody in South Huntington, N.Y. *long path* . . . ■

David F. Miller K9POX
7462 Lawler Avenue
Niles IL 60648

Instant Counter Calibration

--using your TV set

If this is the first issue of *73* that you've read in the last five years, then perhaps you haven't noticed that we are *over* the threshold of the age of "gnat's eyebrow" frequency measurement! It's rather fortunate that the development of affordable frequency counters paralleled the recent rapid growth of two meter FM, because the serious FMer should have (or have access to) a reasonably accurate frequency counter for netting the crystals in his (her) rig. The luxury of being "talked-in" on the larger systems has passed. For the moment, let's suppose that you have your own frequency counter; how does one go about accurately calibrating (or at least verifying the calibration of) the little gem? Faced with this same problem recently, I began to look around for something *on hand* that would provide a solution (in the time honored "ham tradition"), and came to rest on the TV set, the one-eyed monster. Now, before you leave in disgust, stick with me a little longer and see what a handy little frequency reference a TV set can be when tuned to a network station.

All four TV networks, NBC, CBS, ABC, and PBS, presently use rubidium frequency standards to generate their color burst, horizontal sync pulses, and vertical sync pulses. Some local stations also use rubidium standards locked to the network with which they are affiliated, but unless you are sure, you can't count on it (pun?). These rubidium standards are traceable to NBS (National Bureau of Standards) of WWV fame, inasmuch as the networks are monitored by NBS and offsets are published periodically.

At this point, it should be explained exactly what a rubidium frequency standard is, since it sounds so good. Rubidium 87 is a metallic element whose atomic resonance is 6834.6826 MHz. This natural atomic resonance of rubidium 87 is very stable and not easily upset by external factors (particularly when properly shielded and operating in a temperature-controlled cavity). The rubidium unit influences control on a crystal oscillator, which then adopts the same order of stability as the rubidium reference. The crystal oscillator feeds a frequency synthesizer that contains outputs of 5.0 MHz and 3.579554 MHz (color burst frequency). The long-term (one year) stability of commercially available rubidium standards is $\pm 5 \times 10^{-11}$, and the short-term (one second) stability is $\pm 1 \times 10^{-11}$; these figures improve even more when correlated to NBS offsets.

The TV station uses the 3,579,545.4 Hz color burst signal as a reference for its sync generators, which then derive the familiar horizontal and vertical sync signals used to lock the sweep oscillators in the home TV receiver. The gears are undoubtedly clicking at this point and you're beginning to eye the mahogany knothole with some quick glances.

Here's how you can take advantage of those highly accurate signals that are beaming around us, all of eighteen plus hours a day. The easiest way I've found is to pick up the horizontal sync signal, which is in abundance inside the cabinet of a TV receiver due to its use for the derivation of the high voltage that's needed to run the picture tube. This high voltage spike can be found anywhere around the flyback transformer or the picture tube yoke (which is a safer area to work in). If the set has a wooden or plastic cabinet and your counter is sensitive enough, you may find enough signal to lock on even outside of the cabinet (try the picture tube screen for openers). Note that there is no need to connect either lead from the counter directly to the TV receiver. In fact, unless the TV set is equipped with a power transformer, it would be disastrous to do so (especially if the counter is grounded, which it should be)! Some of the newer portable TV sets have no power line isolation transformers and use bridge rectifier circuits for ac to dc conversion, with the result that even reversing the ac line cord won't place the dc common at ground potential (it's always hot). This situation makes it impossible to hook up externally grounded test equipment to these sets unless an external isolation transformer is used. The preceding was mentioned only to protect the innocent. During a network color broadcast, the horizontal scanning frequency will be 15,734.265 Hz, which I have read on my Heath IB-1103 by simply placing a *well insulated* lead from the counter over the deflection yoke on the neck of the picture tube. You'll notice, if your counter will read below 1 Hz, that the ".265" will vary between counter sampling periods

(because you're not phase locked to the signal, but this is really splitting hairs). It should hit ".265" occasionally. On most counters, if you're within a couple of cycles of 15,734 Hz, you're in good shape. Incidentally, you can use a black and white TV instead of a color set, because its horizontal oscillator is locked to the color standards (H and V sync pulses) as well. Just be sure you are tuned to a network color program. Most network color mobile units now have rubidium standards on board, with the possible exception of the small news "mini-cam" units, so that even in-the-field sporting events will provide accurate sync signals. One more thing: Don't be in a hurry. Give yourself enough time to average the reading over a 10 or 15 minute period. This will give the clocking oscillator in the counter time to stabilize after adjustment, and also will permit you to observe the medium term stability of your counter. Whether or not you actually watch the program on the TV screen is strictly up to you.

There are some inherent errors in the system just described (such as distortion in the microwave relays used for cross-country TV signals, transmission and multi-path distortions within the local "ether," and distortions that take place within the TV receiver itself), but these are *phase* and not *frequency* distortions. So as long as you're not trying to read to three places below one cycle (Hertz), don't fret about 'em (the purists should be happy now).

There you have it: no digging into the circuitry, handy at most times of the day and night, available throughout the country, and very accurate. What more could be asked for? Just one thing – better give the TV set back to the wife and kiddies! ■

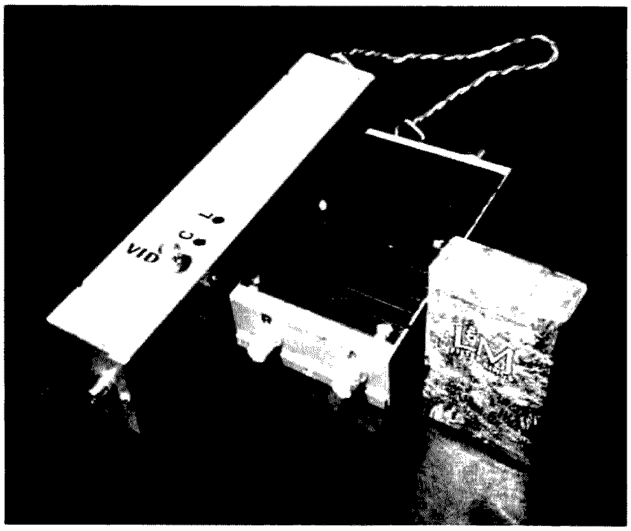

Fig. 1. Low cost 10 Watt ATV transmitter (exciter left, amplifier right).

Here's a compact 10 Watt fast scan amateur television (ATV) transmitter with audio on the video carrier and T/R switching that can be built for about $120 (Fig. 1). The rig incorporates the video exciter described in the June 1976 issue of *73* to drive a quasi-linear 10 Watt 3/4 meter amplifier. No amplifier tune-up is required since it utilizes the Motorola MHW-710 sealed power module. (For theory of operation of this module in the ATV mode, refer to Nov/Dec 1975, page 37 of *73*.)

Operating at 13.8 V dc, the transmitter draws about 2.7 Amps from an external regulated power source. Linearity and frequency response performance is shown in Fig. 2.

As noted above, the construction details for the exciter have already been given; therefore only the amplifier circuit will be described here. Several different mounting arrangements are possible, so you may wish to deviate from the following procedure. Of course, both the amplifier and exciter can be collocated in the same enclosure; however, experimentalists may prefer the two-box modular approach to effect rapid exciter or amplifier interchange with future designs.

Super Simple 450 MHz Rig

--go ATV with a $42.50 module

Bruce J. Brown WB4YTU/WA9GVK
4801 Kenmore Ave #1022
Alexandria VA 22304

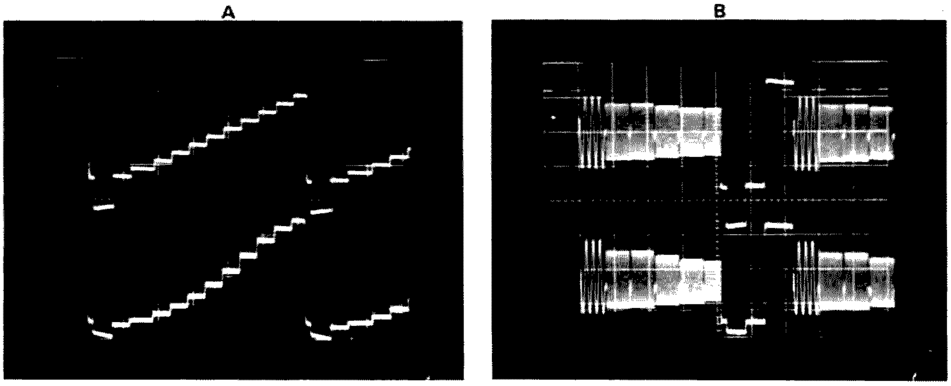

Fig. 2. Performance curves, 10 Watt ATV transmitter. All vertical scales uncalibrated. Power: 13.8 V dc @ 2.7 A. (a) Linearity: top scale — video in; bottom scale — detected rf output; 10 usec/div horizontal; 10 Watts out (average). (b) Frequency response: top scale — video in; bottom scale — detected rf output; 10 usec/div horizontal; burst order (in MHz) — 0.5, 1.5, 2.0, 3.0, 3.58, 4.2.

Amplifier Construction Procedure

Refer to Parts List and Fig. 3.

1. Drill holes in chassis and heat sink per Figs. 4 and 5. Make sure that holes in heat sink line up with holes in chassis.

2. Referring to Fig. 6, mount all components to PC board. (Foil layout for board is shown in Fig. 7.)

3. Using two #4-40 screws, lockwashers and nuts, bolt PC board to two "L" brackets as shown in Figs. 8 and 9.

4. Spread heat sink compound over back of heat sink and Motorola MHW-710 module. Place module on inside of chassis and heat sink on outside. Place PC board mounting brackets on module. Position brackets, module and heat sink so that all holes line up. Bolt all together with two #6-32 screws, lockwashers and nuts.

5. Using four #8 screws, lockwashers and nuts, bolt the corners of the heat sink to the chassis.

6. Solder all seven pins of the module to the PC board (pin numbers shown in Fig. 7).

7. Mount 3 BNC connectors, feedthrough capacitor and ground lugs to chassis. As shown in Fig. 9, also secure a #8 terminal lug to one of the screws holding the heat sink to the chassis. This is the relay ground lug.

8. Run twisted #20 wires from the feedthrough capacitor and ground lug (next to feedthrough) to + and GND on the PC board respectively. Solder a 500 uF electrolytic capacitor across the feedthrough and ground lug.

9. Completely cover the transparent plastic sides and end of the relay with copper foil. Also run a .2" strip of foil across the bottom of the relay (where the contacts are). The relay socket is not used. Solder all copper foil pieces together to insure a good shield.

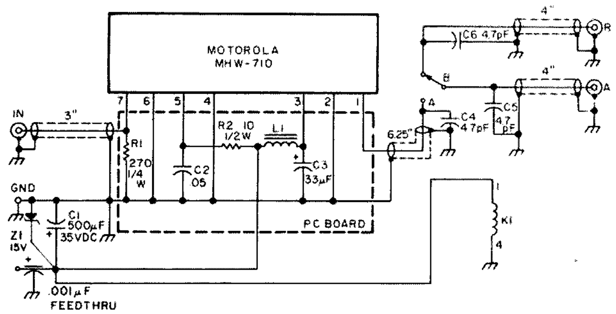

Fig. 3. 10 Watt amplifier schematic. K1 is Archer (Radio Shack) #275-206 relay. L1 is Ferroxcube. VK200-20/4B.

10. Position the relay as shown in Fig. 9. Terminals A and B will be up. Solder the #8 terminal to the copper foil at the end of the relay opposite from the contacts. This will partially secure the relay in place while also grounding the relay's shield.

11. Solder wire from the ground terminal to terminal #4 of the relay. Solder a wire from the feedthrough capacitor (+ V dc) to terminal #1 of the relay.

12. Prepare four RG-188 cables as shown in Fig. 10.

13. Connect the 3" cable from the "IN" BNC to "IN" on the PC board (module pin 7). Solder the cable shield directly to the grounded portion on the BNC connector. The other shield is inserted in the hole provided on the PC board and soldered to the foil. All shield lengths must be as short as possible.

14. Solder the ½" long center conductors and shields of the two 4" long cables to BNCs "A" and "R." Also solder the ½" long center conductor and shield of the 6¼" cable to "OUT" on the PC board (module pin 1). Again keep shield lengths as short as possible.

15. Solder the 1¼" long center conductor of the cable from the PC board to terminal A of the relay.

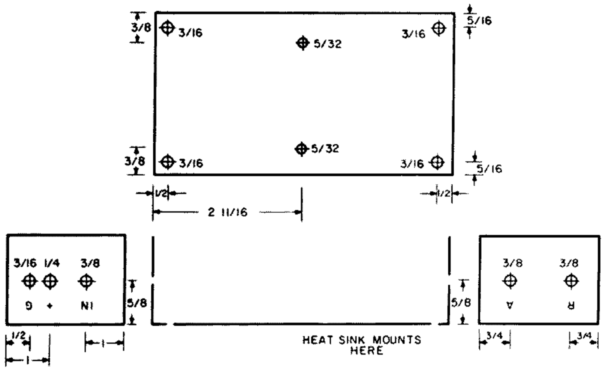

Fig. 4. ATV 10 Watt amplifier chassis drill guide. Notes: All dimensions are in inches. All measurements are from outside edge of chassis. Chassis is LMB #139. Guide is not drawn to scale.

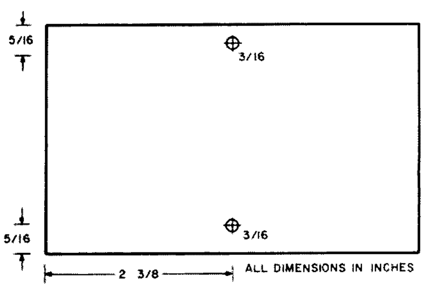

Fig. 5. Heat sink drill guide. Heat sink is International Rectifier HE330-C or Wakefield 623-K.

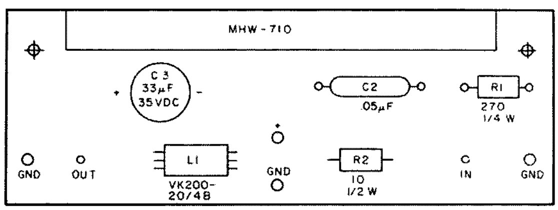

Fig. 6. 10 Watt ATV amplifier PC board, component side.

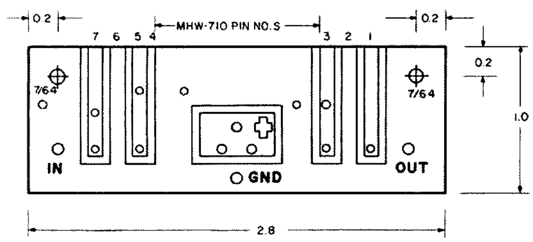

Fig. 7. 10 Watt ATV amplifier PC board, foil side. All dimensions in inches. Board is glass.

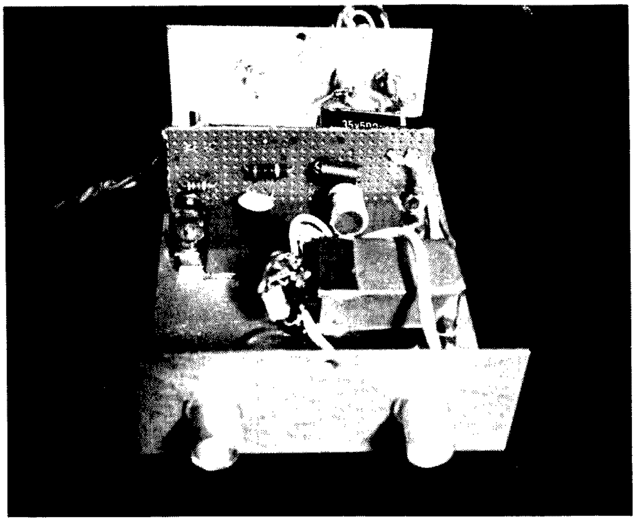

Fig. 8. PC board, prototype shown.

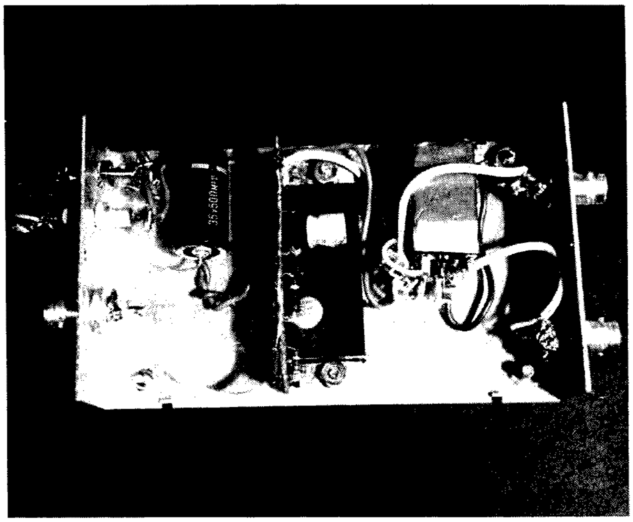

Fig. 9. Internal (bottom) view.

Solder the shield to the relay's copper foil near the terminal thus creating a small loop. Solder a 4.7 pF capacitor between the grounded shield and the terminal (see Fig. 11). Solder the cable from BNC "A" to relay terminal B in like manner. In the same way, solder the cable from BNC "R" to the relay terminal immediately below terminal A. Again all shield lengths should be as short as possible. Also keep loops as close as possible to their respective capacitors.

16. Screw on bottom cover of chassis and label using stick-on lettering (see Fig. 4 and 5 for lettering).

17. The amplifier is now complete (see Fig. 12).

Tune-Up With QRP Rig

Connect a short length of RG-58 coax from the "OUT" connector on the QRP transmitter to the "IN" connector of the amplifier. Also connect a through-line wattmeter and dummy load or antenna to the amplifier's output (BNC "A"). Apply 13.8 V dc from a regulated 4 Amp continuous supply to both the amplifier and exciter.

Basically follow the tune-up procedure given in the QRP rig article. Of course, now you will be aiming for a good picture at about 10 Watts instead of ¾ Watts. The following suggestions may be of help:

a) Remove the core from L6 on the exciter. Set the "L" (level) control fully counterclockwise. These actions will knock down the drive level which should make tune-up easier.

b) Start with "C" (contrast) control fully clockwise.

c) Adjust output modulation and power levels using the 4 variable capacitors in the exciter's output circuitry.

Don't rely too heavily on the picture you see on your local TV monitor since the 10 Watt transmitter will probably overload it. Try to have an on-the-air station, remotely located, assist you. If you use a coupler, detector and oscilloscope to tune up the rig, you may note a 15 to 20 MHz oscillation on the signal. It will generally not be observable on your TV monitor. To attenuate this parasitic signal, adjust L1 through L5 for minimum oscillation amplitude.

A complete ATV station is shown in Fig. 13. Be sure to use hardline and a good antenna for best performance. As explained in the QRP article, a separate receiver is required to derive audio from a signal using the audio-on-the-carrier format.

Important Design Notes

Amplifier power output is highly dependent upon power supply voltage. A 1 volt difference can result in a 3 Watt difference in output

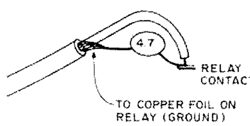

Fig. 11. Relay contact connection.

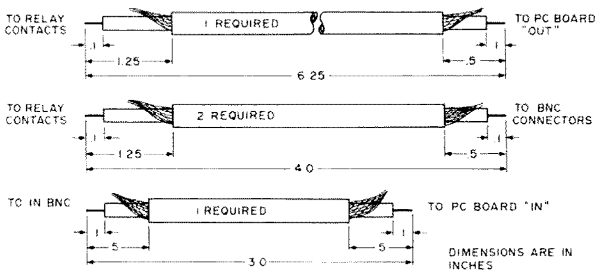

Fig. 10. RG-188 cable preparation.

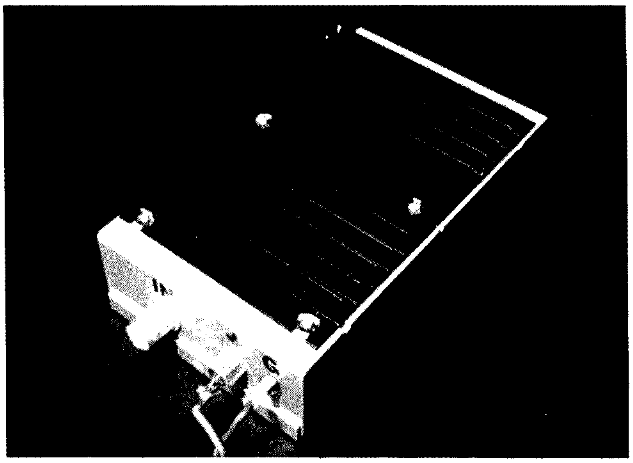

Fig. 12. Amplifier, top view.

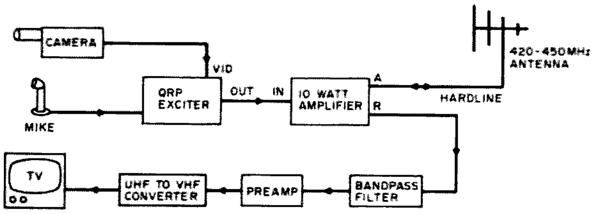

Fig. 13. Typical operational configuration.

power. To achieve a good video signal at 10 Watts average power, 13.8 V dc must be used. Current drain will be slightly less than 3 Amps. If the amplifier is driven hard into a class C mode (no video), it will be possible to initially obtain about 15 Watts. You will note that as the amplifier warms up, the power output will drop. This is natural operation for the Motorola module. Also don't be alarmed if the heat sink and case get very warm. This, too, occurs in normal operation. If you should use the amplifier without video, try not to overdrive it. Use the minimum drive power necessary to achieve full output power (about 300 mW). You will generate fewer spurs while also reducing possible damage to the input of the 710 module. WARNING: When exciting the amplifier, always make sure that BNC "A" is loaded. I smoke-tested the amplifier with about ¾ Watts drive and no load and found that the amplifier self-destructed in 2 minutes (an expensive experiment at $42.50 a module!). The MHW-710 is rugged and can handle short periods of misuse but don't overdo it.

When procuring the 710, you will note that two models are available: the 710-1 for 400-440 MHz and the 710-2 for 440-480 MHz. I have used both types and found that they perform equally well in the 435-450 MHz portion of the ham band.

If you can't get at least 15 Watts from your amplifier at a cold start using 13.8 V dc, you may be experiencing high losses in the relay circuitry. To verify this, connect a cable directly from the wattmeter to "OUT" on the PC board. Normally the relay will exhibit a 1 Watt loss in the 15 Watt range. Relay efficiency is highly dependent upon the length of cable between the relay and PC board "OUT." If you do have a loss problem, experiment using different cable lengths.

The rig is placed in transmit by applying voltage to both the exciter and amplifier power terminals. This arrangement is rather unconventional for normal PTT use, but has been implemented here for simplicity. You may wish to use the spare set of relay contacts and mount additional feedthrough capacitors to achieve a standard switching scheme.

ATV 10 Watt Amplifier Parts List

Part #	Description	Qty	Unit Cost	Total Cost	Source of Supply
1	5½"x3"x1½" Chassis; LMB #139	1		$2.00	Electronic Supply Store
2	UG-1094 BNC Bulkhead Connector	3	S .85	2.55	Electronic Supply Store
3	.001 uF feedthrough cap; Erie #327-005-X5UO-102M	1		1.62	Electronic Supply Store
4	3/8"x3/4" "L" bracket; Calectro #J4-641 (2 brackets in package)	2		.49	Electronic Supply Store
5	Heat sink, 3"x4.75"x0.46" International Rectifier HE330-C or Wakefield 623-K	1		2.72	Electronic Supply Store
6	Heat sink compound; Archer 276-1372	1		.89	Radio Shack
7	½" #8 screws, nuts and lockwashers (to mount heat sink to chassis; also for gnd lug)	5			Hardware Store
8	½" #6 screws, nuts and lockwashers (to mount MHW-710 with "L" brackets to chassis)	2			Hardware Store
9	#8 hole terminal lug; Waldom #KT-198	3			Hardware Store
10	#8 nut (to secure ground lug soldered to relay)	1			Hardware Store
11	¼" #4 screws, nuts and lockwashers (to attach PC board to "L" bracket)	2			Hardware Store
12	RG-188 cable	18"		3.00	Cable & PC Brd both from Stu Mitchell
13	Amplifier PC board; cut, etched and drilled	1		Ppd	WAØDYJ, 14761 Dodson, Woodbridge VA 22193
14	MHW-710-1 or -2 Power Amplifier Module, Motorola. The 710-1 covers 400-440 MHz; the 710-2 covers 440-480 MHz. Either device will give equivalent performance in the 435-450 portion of the band.	1		42.50	Call local Motorola sales office for source
15	#20 stranded wire, insulated	20"			Electronic Supply Store
16	Stick-on lettering kit				Stationery Store
17	DPDT relay, 12 V dc; Archer #275-206	1		3.99	Radio Shack
18	Copper foil, Circuit-stick #9252	1		1.49	Electronic Supply Store
L1	2½ turn ferrite choke; Ferroxcube VK200-20/4B		.51	1.02	Eastern Components 1407 Bethlehem Pk. Flourtown PA 19031 S10 min. order
C1	500 uF, 35 V dc, Axial #272-1018	1		.89	Radio Shack
C2	.05 disc, #272-134	1		.39	Radio Shack
C3	33 uF, 35 V dc, PC Type, Lead aluminum	1		.30	Lafayette; Elec. Supply
C4-6	4.7 pF (or 5 pF), #272-120	3	.29	.87	Radio Shack
R1	270 Ohms, ¼ Watt, 10%	1		.10	Electronic Supply Store
R2	10 Ohms, ½ Watt, 10%	1		.12	Electronic Supply Store
Z1	15 V zener, 1N4744	1		.40	Electronic Supply Store

A 13.8 V dc power supply with a rating of 4 Amps continuous is required.

Acknowledgements

I am grateful to Charles Spitz W4API for providing many of the components used in the development of the rig. Terry Fox WB4JFI provided many valuable suggestions and also supplied the test equipment used to optimize the design. Stu Mitchell WAØDYJ/4 fabricated the PC board. ■

by Wayne Green W2NSD/1

I/O EDITORIAL

PHOOEY ON COMPUTERS

Every now and then I get a letter complaining about the I/O section of *73*. They are in the middle of bundles of compliments, but that doesn't mean that I ignore them, for I know the heavy emphasis on something new like this is bound to get a few backs up. I haven't yet forgotten the ruckus when I decided that FM was a comer and should be pushed . . . and that was seven years ago!

Phooey =1. A letter from an old old-timer says that if he wants to read about I/O stuff he would read a magazine in the field. That's baloney because there *is* no magazine as yet providing fundamental material for newcomers to the computer field. Having started one magazine and preparing a second in the computer hobby field I think I can speak with some authority on that. The new magazine will *not* be on the fundamental level of the articles in I/O, by the way.

Phooey =2. Amateur radio is only a hobby, so I don't have to keep up with new developments if I don't want to. Yes and no. Amateur radio exists because it provides services . . . some during emergencies . . . some by virtue of pioneering and inventive efforts. If you are not doing anything of public benefit then you are a freeloader and are riding the coattails of others who are pulling the freight. The least you can do is shut up and not screw things up for those who are making all this fun possible for you.

IBM's advertising department came up with the concept of different generations of their computers. It was a tremendous put-down for other manufacturers when IBM was always one generation ahead of the others. The concept is a valid one . . . in amateur radio we've had the spark generation, the tube generation, the transistor and the IC . . . and now we're faced with what is for us a fifth generation of design . . . the super-IC. An IC usually has a bunch of transistors built into it . . . sometimes dozens. But the technology has moved ahead now where they are cramming thousands of transistors on ICs . . . LSI, Large Scale Integration, they call it . . . and this is one or two orders of magnitude improvement over those puny little ICs of last year. In three or four years they are looking for super LSIs with millions of components on them, and that might qualify as another generation.

Not only can amateurs keep up with this technological pace, they can pioneer with these new components. The new computer chips weren't designed for use as computers at all . . . they were designed for being built into cars to control their many functions, into cash registers, and other such machinery. It took hardly any time at all for a hobbyist to come along and find out that these chips make perfectly good computers . . . and the race was on. Many are being used for processes such as RTTY and slow scan TV, others are being set up and programmed just like the $1 million computer systems. The LSI is there and what is done with it depends upon us.

MONEY . . . PRESTIGE . . . FAME . . . ETC.

All these things can be yours . . . in modest amounts, of course. All you have to do is trade on your expertise in computers, if any, and help us get articles on the latest microcomputer systems and hardware to our readers. About the only prerequisite is some experience with computers as a hobby . . . preferably with a strong ham slant. It is also helpful, but not absolutely necessary, if you can write.

With more and more hobby computer systems coming out, all of us want to know as much as we can about them. How easy or difficult are they to build or get working? What problems do we run into and how are they solved? What accessories or I/O devices will work with them and how do you hook them up? How helpful was the instruction book? How much did the whole thing cost? How helpful was the manufacturer with problems? What could you do with it once you got it together and working? Have you made any changes or improvements to the equipment? Where have you gotten programs for it? Things like that.

I'd love to publish detailed articles on every microprocessor system being used by hobbyists . . . plus the accessory boards such as the Processor Technology and Godbout boards . . . and, unlike at least one of the other magazines, we do not require a Ph.D. level of writing, nor will we accept it.

If you run into any device or circuit that looks like a good deal for the hobbyist, please give serious thought to writing it up so the rest of us can learn from you. Getting information around in this new field is one of the toughest problems. Let's try to prevent too many of us from inventing the same damned wheel . . . okay?

COMPUTERS ARE HERE

The first of what we hope will be a long string of books for the computer hobbyist is now on the presses and is due out shortly. This book covers the basics of computers . . . the circuits involved . . . such as gates, flip flops, TTL logic . . . counting in binary . . . TVT units . . . Baudot/ASCII conversion systems . . . things like that. It is a good starter book for the ham without a lot of background.

We're anxious to put out a lot more books for newcomers to the computer hobby, so if you think you have the making of a good book in you, you could do worse than write to me giving an outline of the material you want to cover, a sample chapter or two, and info on how you will illustrate it. Books should be well illustrated . . . drawings, photographs . . . and we can help with this to some extent.

If you are into programming perhaps you have been at it enough with your own computer to put together a book on BASIC for the hobbyist, or FORTRAN . . . etc. You should give the user an idea of where to get the assembler for his machine . . . and then how to use the language. I suspect that we will eventually have all sorts of languages available for our hobby systems . . . plus instructions on how to use them. I'd love to have all the major languages available on cassette tapes and sell them via computer stores, but that will depend on super-programmers taking the time to develop them and letting me sell the cassettes for them on a royalty basis.

Let's get a lot of books out to help computer hobbyists learn how to use and develop their systems!

TRENTON COMPUTERFEST

In addition to exhibits by many of the manufacturers in the microprocessor field, there was a very brisk flea market going at Trenton on May 2nd. To give you an idea of some of the fantastic bargains, the brand new Burroughs mag tape unit with its own keyboard and documentation went for $75 . . . eat your hearts out over that one!

As at the Albuquerque computer convention, the main system up and running and doing anything much more than playing games was an amateur radio application . . . this time an Oscar computer which had more information available about Oscar 7 than most of us would ever want to know. Once you put in your latitude and longitude coordinates and got its clock set on time, it could tell you exactly what time you could access the satellite . . . it would aim your antennas and follow Oscar across the sky . . . and even adjust your frequency to take care of the Doppler shift!

The next big computer convention is scheduled for Atlantic City, August 28-29th. It looks like fun.

by John Craig

I/O REPORT

Writing for the I/O section of *73* is a great way to become *rich and famous*. (Probably a lot more of the latter than the former, too!) In all seriousness, it can be profitable . . . we pay quite well for accepted articles. If you're like most computer hobbyists, you're always looking for those extra dollars to buy this or that peripheral. (And, of course, it always looks good on a resumé to have been published professionally.) But . . . and this is certainly important . . . you needn't be a professional writer to sit down at the old typewriter and pound out an article for our I/O section. Here are some guidelines to help you along . . .

WHAT TO WRITE ABOUT

Naturally, since we are a ham radio magazine, we're constantly on the lookout for interesting articles dealing with amateur radio applications. But something we should all keep in mind is that the thousands of hams interested in and using computers are going to be using their home systems for things other than ham radio. Therefore, we're going to be looking for articles covering the broad spectrum of hobby computer construction, programming, and applications.

One of the most interesting things for most of us is to read about some piece of equipment that someone has designed and built. While most of us will not be actually building the unit, we'll follow the construction in our minds and enjoy reading about it. With well over 100,000 readers, just about anything described will be built by at least a hundred or so people. It pays to be extremely careful in checking your article for just one mistake . . . or the mail comes pouring in.

If you happen to be doing experimental work in an advanced field that would be of interest to us, you might write about that. We make a particular effort to keep *73* ahead of the other magazines in publishing new discoveries and advancements. Remember that you're writing for the average ham and/or computer hobbyist . . . not engineers.

THE PLAN OF ATTACK

Generating an outline of your proposed article is perhaps one of the most important steps you can take (as well as, of course, sticking to it and not getting sidetracked). Remember the old rule: "Tell them what you're going to tell them; tell them; then tell them what you've told them." A construction article might be arranged as follows: Introduction, Theory, Construction, and Alignment and Adjustment, concluding with a wrap-up of results.

The title and opening paragraph are extremely important! If you don't convince the reader in the beginning that he *should* read on, the chances are he won't. Illustrations and photos shouldn't be overlooked, either. An article without either one can certainly appear to be dry . . . even if it isn't.

When writing, remember that *73* is an informal hobby magazine, and that you're writing for some friends. Don't be a stuffed shirt . . . keep away from "the author," and use the first person ("I"). "I fastened the nut" is better than "the nut was fastened." Write naturally in short, simple sentences, starting a new paragraph with each new thought. Avoid unnecessary abbreviations. Use subheadings for each new section to provide signposts for the readers. Dictionaries are too inexpensive these days for there to be any excuse for misspelling; look it up. (You'll never catch *us* doing it . . . we're quite infalable.) Minimize math. It is rarely necessary in *73* articles and scares readers. While most readers can use simple high school algebra and trig, they don't want to. They prefer practical circuits or practical approaches to a subject. Even engineers prefer predesigned circuits, if only as a starting point for their own work. Use math only where it is vital. Avoid footnotes, if possible, and just put your references in the text (it's easier to read that way). And don't forget to give credit when you borrow an idea from someone else. This is important both ethically and legally.

DIAGRAMS

Put all drawings on separate sheets of paper . . . never in the text. We have excellent draftsmen who redraw all diagrams and schematics, so be sure that your sketches are complete, neat, and readable. Put parts values on the schematic rather than in a separate parts list. Use terms "IC1," "R1," and "C2," etc., only if you are referring to them in the text. If a block diagram will be helpful in getting the "big picture," then by all means include one. Label all drawings as Figure 1, Figure 2, and so on. Write a caption for each and include this with the article text so our printers will be able to set the type. Put your name and/or call on every sheet of paper you submit.

All logic diagrams should reflect signal flow from left to right . . . and, if possible, not have signals enter or exit the diagram *except* from the left or right sides, respectively. Logic symbols must be of the *distinctive shape* variety (in other words . . . *do not* use the box symbols of ANSI Y32.14). Also, the logic symbols (gates in particular) should reflect the logic function being performed . . . a schematic with all NAND or all NOR gates usually doesn't.

PROGRAMS, LISTINGS, ETC.

All programs should be well-commented. There should be a column for the address (symbolic, octal, hex, or statement number), a column for the instruction or statement, and a column for the comments (or liberal use of "REMark" statements in a BASIC program). Memory dumps should be used only if a program is extremely long (in such cases you might do well to make arrangements to sell the program for the cost of duplication, or whatever). Flowcharts are fine, too.

Articles on programming should center around the languages of the more popular home computer systems. In other words, an article dealing with programming a particular problem in IBM 360 or DEC PDP/11 Assembly Language would not be appropriate. Machine language, Assembly language, and BASIC articles will be the most sought by our readers. If a program written in another language (such as FORTRAN) can be easily converted over to BASIC . . . or if it contains some interesting techniques or concepts . . . *73* might be interested.

ABBREVIATIONS

Don't make any rash assumptions regarding abbreviations . . . if you have any doubt, be sure to spell them out the first time they're used. We use the NBS-accepted abbreviations: Hz, kHz, MHz, uF, pF, mH, uH, H, W, mW, uW, V, mV, kV, A, mA, uA, dB. Do not use periods or pluralize the abbreviations. Separate them from the number: 10 MHz, not 10MHz.

PHOTOGRAPHS

Good photographs use up a lot of space and make an article much more interesting. If you can't locate an amateur photographer, you should use a professional. The amateur will probably do the job in exchange for a credit line in your article. The professional will, of course, charge you a fee, but the article will probably bring you at least that much more. Photos 4" x 5" are OK, but 8" x 10" are preferred. Instamatics and Polaroids just don't cut it. You'll want an overall photo of the equipment, plus views of any area that will be helpful to the reader who wants to duplicate your effort. Again, captions are separate and can be put at the end of the article text. (Number the back of each photo to correspond with each caption.) Do not use figure numbers for photos.

THE MANUSCRIPT

Use regular typing paper (not the erasable type) and double space your article, leaving wide margins. Number the pages and put your name and call (if any) on each page. Do not type titles, subtitles, or text in all capitals. Underlining a word indicates that it is to be in italics. Keep a carbon copy . . . just in case. Each page of typed copy will be equal to about one sixth of a page in *73*.

Send your article, First Class, to:

John Craig
I/O Editor, *73*
RFD Box 100 D
Lompoc CA 93436
(805) 738-7337

Be sure to enclose a self-addressed envelope in case we have to return it. We'll let you know our reaction as soon as possible. Payment usually takes a week or so and up to a month or more when we have to recheck something. The payment depends on interest, uniqueness, how well prepared the article is, how well known you are, how much work is involved in preparing it for publication, etc. It normally runs between $25 and $40 per page, with the average being about $30. Technical articles normally pay more than non-technical ones. We estimate the length of the article as best we can, and our payment is final. If you think we've made a bad mistake, let us know before you cash your check.

Once the article has been paid for, it belongs to *73*, with all rights reserved. It will be prepared for publication on a schedule determined by the editor. You will receive proofs of the text and diagrams, and should check and recheck these proofs for errors. Your reputation (and *73's*) rests on your care at this point. It is too late for rewriting, so just correct any errors and rush the proofs back. Then begin work on your next I/O article.

Don Alexander WA8VNP
300 Colonial Ave.
Worthington OH 43085

The First Computer-Controlled Ham Station

--Grand Prize winner at the WACC!

Station console. Computer, station control, video display, and keyboard are rack-mounted for ease of operation.

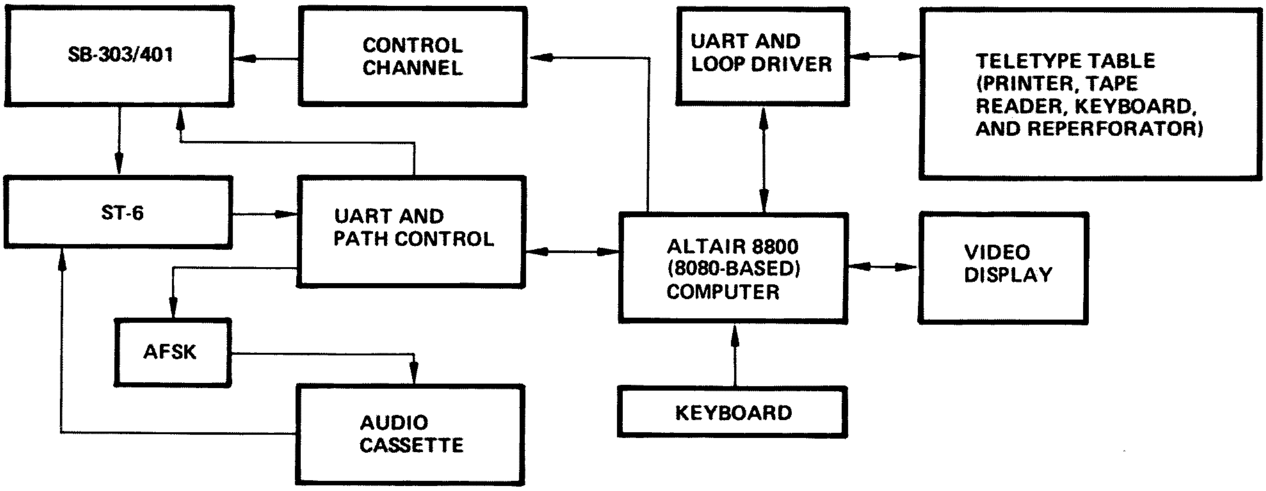

The microprocessor has established itself as one of the most useful and versatile products on the electronic market to date. It is not too surprising that many amateurs are experimenting with and using microprocessors in conjunction with their radio hobby. The applications for microprocessors within amateur radio are as varied as the individual imagination, the best part being that a microprocessor-based implementation of a complex function is relatively simple compared to its discrete component counterpart and is much more flexible. This article will attempt to give the reader an overview of what I've done with an Altair 8800 microprocessor-based system and a radioteletype station. Later articles will be more specific about software and will include construction articles for those wishing to use some of these ideas.

Don's station was the Grand Prize winner at the recent Altair Computer Convention in Albuquerque, New Mexico. His system consists of a Heath SB-301 and SB-401, Altair 8800 with 8K of memory, ST-6, ASCII keyboard, home brew video terminal, and Model 19 (for hard copy). It was the "only totally integrated system" among all the demonstrations set up there. – Ed.

Some Definitions of Terminology

A few definitions are in order before I get too far. These are my own definitions and are not necessarily rigorous.

1. *Microprocessor:* An integrated circuit (sometimes several integrated circuits) which will perform a number of varied operations according to a list of instructions stored in memory; a computer on an integrated circuit. I will use the words microprocessor, processor, and computer almost interchangeably through the rest of this article.

2. *Instruction set:* A list of logical, mathematical or manipulatory operations that a processor will perform on data stored in memory or within the internal register structure of the processor.

3. *Hardware:* The actual collection of electronic components, wire and other assorted stuff that makes up the computer system.

4. *Program:* A sequence of instructions (selected from the instruction set) and data which directs the operation of the processor to accomplish a given task. A program is stored in memory while it is in use.

5. *Bit:* The smallest unit of memory. A bit may be either on or off, logical one or logical zero.

6. *Byte:* Eight bits. The byte has come to be a standard measure of memory. Hang around a couple computer freaks and you will hear one of them ask how much memory so and so has. If the answer is over 8 thousand bytes you should be suitably impressed. If, on the other hand, the answer is some small number like 256 then you should say something like "What can he do with that?" If the number of bytes is given in so many K, for instance 32K, that is the same as saying 32 thousand except that it is easier. By the way, whenever someone is talking about memory, a thousand (or a K) usually means 1024. It's easier to say 16 thousand, or 16K, than 16,384.

7. *Word:* A unit of memory consisting of a somewhat arbitrary number of bits, the number being defined by the particular processor used. It is the number of bits that the processor operates on at any one time (don't quote me on that since there are always exceptions). The most common word size for a microprocessor is 8 bits, or one byte.

8. *Memory:* The medium which stores programs and data such that the processor has access to any word at any time.

9. *Mass storage:* A medium which is used for long term or large volume storage of information. Examples are magnetic tape, paper tape and magnetic disc. I distinguish mass storage from normal memory on the basis that information stored on a mass storage device must be transferred to normal memory before it can be used by the processor.

10. *Software:* Programs. Programs are called software because they can be modified without too much trouble as compared to modifying a piece of hardware.

11. *Firmware:* The exception to the last definition. Sometimes programs are stored in a special type of memory that cannot be modified by the processor (except in very special cases or if the processor begins to burn). These programs are called firmware because it is not as much trouble to modify a firmware program as it is to modify hardware, but it requires more profanity to fix an error in a firmware program than is normally associated with changing software. See the next three definitions.

12. *ROM:* Read only memory. A type of memory that is programmed during manufacture. The contents of a ROM cannot be changed except by destruction.

13. *PROM:* Programmable read only memory. A read only memory that can be

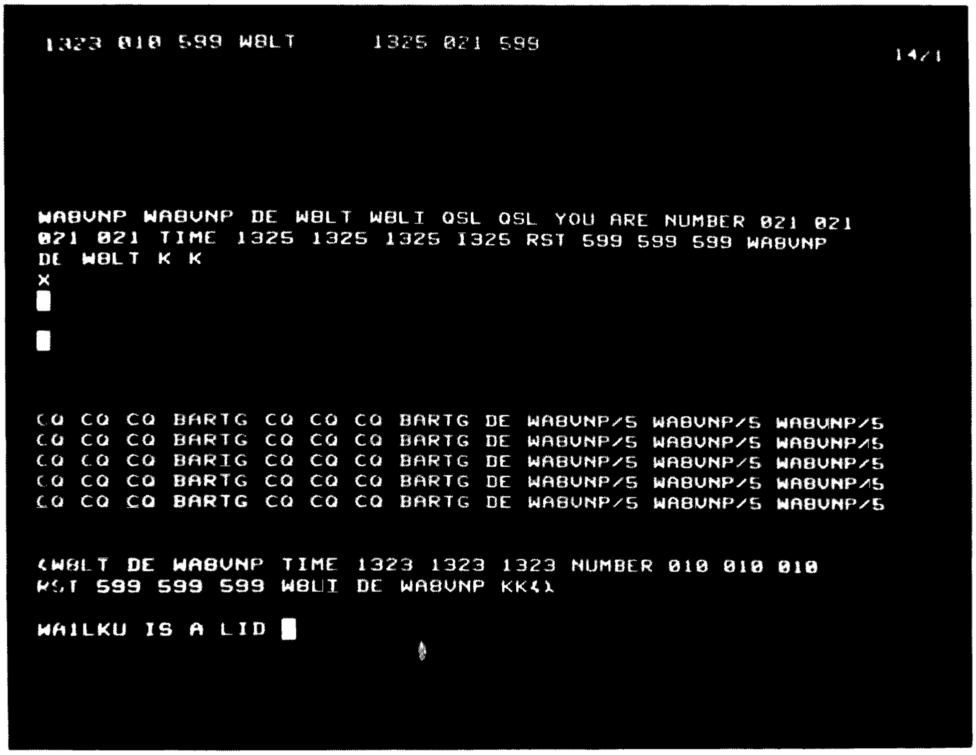

Close-up of the video display showing, from top to bottom: current log line, receiver area, keyboard entry line (blank except for cursor), and the transmit buffer.

programmed in the field by the user (meaning you). It is more useful to the amateur market than ROM since programming charges for small quantities of ROM (less than several thousand) are prohibitive.

14. *EPROM:* Erasable, programmable read only memory. Same as PROM except that it may be erased by high intensity ultraviolet light and re-programmed. There is also a new type of ROM being introduced which is electrically alterable (which screws up my definition of firmware, but I doubt if anyone who knows about it bothered to read the definitions). I think it is called EAROM for electrically alterable read only memory. The main thing about ROM, PROM, EPROM (and EAROM, I think) is that it doesn't forget what it knows when the power goes off.

15. *RAM:* Random access memory. This type of memory can be read by the processor and modified by the processor. It also tends to forget what it knows if the power goes off unless it is magnetic core memory. Most microcomputers use solid state RAM since core memory is expensive and comparatively hard to use and uses much more power. Still, you will hear people talk about how much core they have even when they mean solid state RAM. Don't bother to correct them – it's a waste of time. I have been corrected many times and still have a tendency to call my memory core.

16. *FIFO:* First-in-first-out buffer. A type of memory buffer which stores information (usually characters) in such a way that the characters are expelled from the memory (when requested) in the same order in which they were originally entered. Many radioteletype stations use such devices to simulate the paper tape punch/paper tape reader combination which can be used to allow an operator to type information ahead of the transmitter.

17. *UART:* Universal asynchronous transmitter/receiver. A circuit which converts serial data to parallel data and vice versa.

The Inspiration

When I first got into radioteletype I never imagined that I would ever need or want anything beyond my RTTY converter (ST-6) and my Model 19 teletype machine. After operating my station for a couple years, I had talked to guys who had video displays, selective call-up, time/date prestidigitizers, UARTs and FIFOs, and all manner of other equipment better than mine. Hardly anyone knew what a Model 19 was except that it made a lot of noise. Pretty soon my ears confirmed the suspicion that a Model 19 is not as quiet as it could be. Then one day some guy told me what UART stood for and how to use one. I decided to build a super station.

I made a list of all the features I wanted to include in my ultimate teletype station. The major items were to be a video display, a solid state keyboard, use of UARTs and FIFOs, selective call-up, time/date generation and a message board. Minor items were added, deleted and modified almost daily at the outset of the design project.

The first major sign of trouble appeared when I was considering methods to edit a 72-80 character line down to 64 characters so it would fit on my display. The most obvious idea is to break the line on a space if it occurs near the end of the line. For this purpose one has to consider the line feed character to be equivalent to a space. I was talking to some station up in Nova Scotia and telling him about this when I noticed that he, like many amateurs including myself from time to time, had the habit of ending a sentence, sending 10-20 periods (or dashes), and then beginning a new sentence. This could result in split words or lines beginning with umpteen punctuation marks if I simply looked for spaces to break my lines on the display. It began to look like I would have to settle for some funny looking print occasionally. I was willing to accept that, so I plunged ahead. But, by the time I was actually near the point of building anything, the designs had gotten to be so complex and inflexible that I wanted to wander onto I-71 pulling my Model 19 right behind. Then I heard rumblings about the eventual legalization of ASCII for use on the amateur bands and all but gave up on the project.

One day, in the depths of despair, I read an article on recent microprocessor breakthroughs which had brought prices down to affordable levels. It didn't take too long to realize that by simply interfacing the various com-

ponents of my station to a computer, I would be able to simulate all of the desired features by writing appropriate software. In addition, I would be able to write programs that would do all sorts of other things I had never even considered building because of their complexity (e.g., almost automatic contest operation). Time/date and selective call-up would be trivial. A FIFO could be simulated by software with the addition of elaborate editing capabilities (I don't type so well). The legalization of ASCII would cause no problems since I could copy any code (including Morse) by doing the appropriate code conversion. I could even have the system whistle "Dixie." Such a deal.

The Realization

The block diagram shows the configuration that I finally decided to use. It is not as optimum as it could be, since it would be desirable to have a completely separate interface for the cassette recorder. However, it is reasonable to use the RTTY demodulator and AFSK generator for storing data on an audio cassette since it involves no additional construction other than a switch or two. I needed to get something going to fill the time it would take to get a dedicated cassette interface going. Besides, using normal AFSK for cassette recording will probably turn out to be one of the best ways for amateurs to exchange software.

The keyboard is a solid state keyboard (many types are available from the various surplus houses) which generates a seven bit code (ASCII). The interface for the keyboard is a simple parallel input port and will be described in one of the later articles.

The Heath SB-301 and SB-401 are monitored and keyed through the ST-6 demodulator and a UART. A control channel allows the processor to select the shift, reverse the shift, select the speed of the UART, turn the transmitter on and off, and send make break or narrow shift CW. It is pretty simple, consisting of the UART and some latches to provide the necessary control.

The video display is a home brew display and is the most useful item in the system next to the processor itself. It will display 29 lines of 64 characters per line in both upper and lower case, plus a few Greek symbols. The memory of the display is large enough to hold 32 lines of information but I have displayed only 29 lines to avoid uncomfortably close line spacing. The processor treats the display as normal memory rather than as an output device, and can read from or write to the display memory at a very fast rate, the actual rate depending on the program controlling the read or write functions. An upper limit for the transfer rate is about 2 million characters per second, the typical rate being closer to 100,000 characters per second. The high read/write speeds mean that there is no need to build extra hardware for scrolling the display – one simply writes a short program that reads each character of the display and re-writes it on the next line up. Scrolling the entire display then takes about 50 milliseconds of processor time. Another advantage of this technique is that the display can be partitioned into several sectors and each sector can be scrolled independently of the other sectors.

Another feature of the display is that each character can be controlled on an individual basis to produce a black character in a box of white. I use the video inversion feature for displaying cursors, which means that I can have as many cursors roaming around as I desire.

The teletype equipment (my old Model 19) is interfaced through a UART and simple loop driver and sensor. I use the teletype for producing hard copy of my programs, my logs, and for printing teletype art. It also serves as an excellent backup system for making and reading paper tapes in case the cassette recorder decides to give up the ghost.

The Sting

The first practical use I made of the system was as an operating aid in the BARTG RTTY contest during the last weekend of March. I had just finished putting the system together and had gotten a resident assembler running (a resident assembler is an extremely valuable programming tool – watch for articles on programming) when I was invited to bring my system to Albuquerque as a display entry in the Systems Demonstration Contest of the World Altair Computer Convention. It happened that the convention was the same weekend as the BARTG contest. In four long evenings I wrote a contest program that would enable me to operate the contest from the convention while I was devoting most of my attention to telling people about the system.

The processor "listened" to the receiver through the ST-6 and UART. When I was tuned to a valid RTTY signal, the information was edited

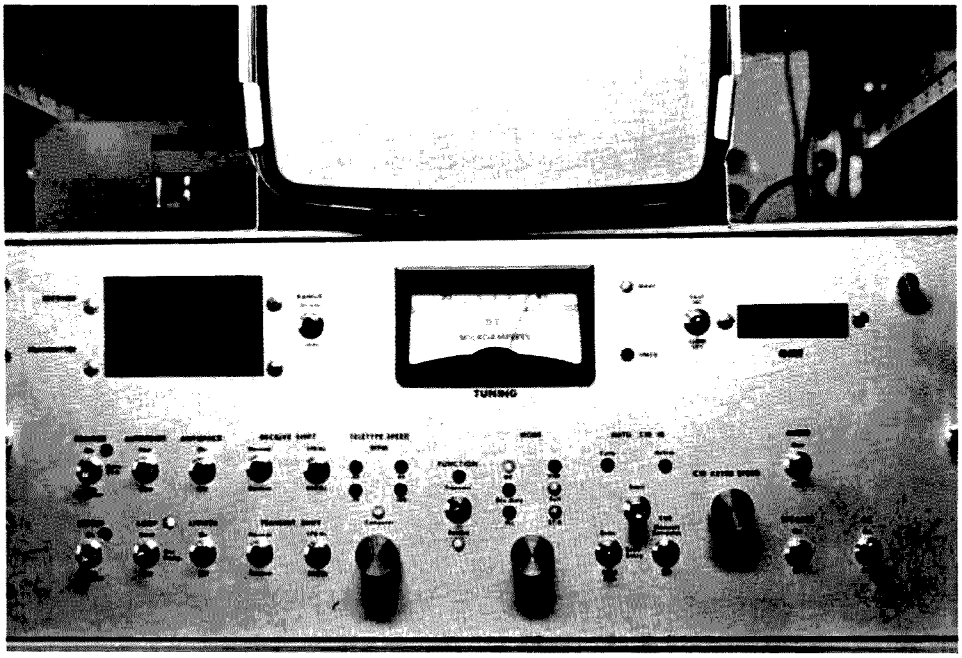

Front panel of station console.

and displayed in one area of the video display. If I saw a station that I wished to work, I typed in the call of that station. The computer would instantly tell me if I had already worked the station or not. At the same time it would enter the call of the station, the current time, and the contact number on a line of the display that I had reserved for developing log entries. The only other piece of information that I needed to type was the signal report I wished to send to the station. By using special two letter commands, I could have the computer call the station (or answer him if he was calling me), send the entire exchange, tell him that I QSL or ask him to repeat the exchange, or tell him that this was a duplicate contact. Other two letter commands allowed me to request the computer to send CQ and call QRZ. All of the text that the computer generated (which was complete with callsigns and carriage control) was displayed in another area of the screen. Upon completion of a contact the computer would turn on the printer and print a hard copy of all information required in the contest log. If a contact was started and not completed, then no log entry was made. The only information saved in memory after a valid contact was the callsign and a tag byte to indicate which bands the station had worked so the computer could do duplicate checking, as mentioned above. The computer also handled generation of the CW identification, when necessary.

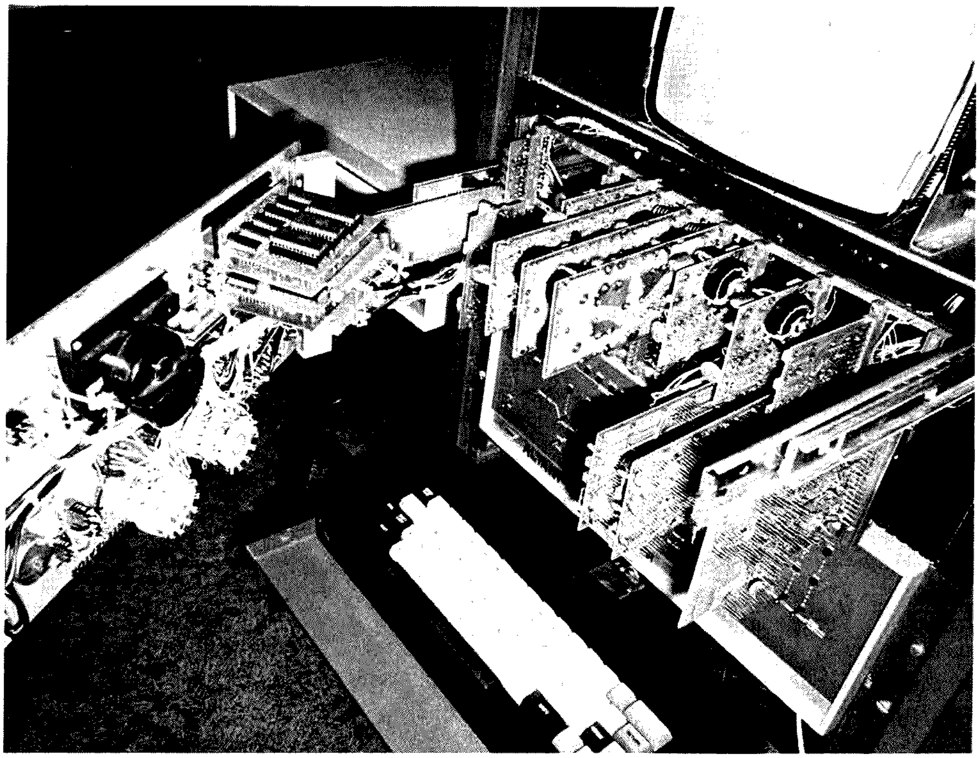

Interior of station console showing the ST-6 boards, frequency meters, electronic keyer, and interface boards.

The result was that I walked away with the first place prize in the system display contest, a floppy disc drive. Needless to say, I have altered my plans concerning construction of a separate cassette interface and will be devoting my time to writing software to utilize the disc drive as my mass storage device.

The Implications

So far I have only scratched the surface of the many possibilities for use of a microprocessor in the RTTY area alone. Other obvious uses for microprocessors within amateur radio include repeater control, CW reception and transmission, antenna control (for OSCAR or moonbounce especially), and who knows what else. A less obvious but equally or more useful application is digital filtering. Slow scan to fast scan conversion would also be another interesting possibility.

If you or your club has been doing work with microprocessor applications within amateur radio (or in any way related to amateur radio), I'd be interested in hearing about them. There are many ideas and techniques for using microprocessors rolling around out there, and I would like to help get them into print. Better still, write an article about your stuff so others will know what you are doing. ■

Tom Pittman
PO Box 23189
San Jose CA 95153

The Which Chip Dilemma!

--4, 8, 12, or 16 bits: pros and cons

I have had my computer operational for nearly four years now, but there are not many people who know what kind of computer I have – I don't tell them. It is not that it is such a bad system; in fact, I have a floppy disc operating system with a TV display (including color graphics) and ASR33 Teletype for hard copy, and an almost-running audio cassette interface. I have programs that play tic-tac-toe and Life, and that allow me to paint pictures on the TV set with a joystick or to make music through the cassette player amplifier. I keep the local computer club mailing list on disc, and have programs to sort the file and print labels. I have two different text editors and several assemblers. But when I tell someone that I have a 4004 system, they look at me and think or say, "But that is a four bit processor. It is only half a computer."

Now, I will concede that four bits is only half of eight bits, and most of the microprocessors around are eight bit machines. But I dare say that my system is twice the computer that most of the eight bit systems I have seen are. My point is that to judge a computer solely on its word size is like judging a person solely on his national origin. I call it bigotry. This may be more evident in the following example: The IBM 704 of the 1950s had a 36 bit word; the IBM System 370 of our time has a 32 bit word. Yet the 370 is by no means 11% less of a computer than the 704. The real measure of a computer is what it can do and how well it can do it. True, the word size is significant, but less so than CPU architecture, the instruction set, the kinds of addressing modes, how the CPU interfaces to the outside world, and what else goes into the system. In this article we will consider some of these criteria, and compare some of the popular micros in this light.

Since the subject has already been broached, let us consider word size first. There are four standard word sizes in the available microprocessors: 4, 8, 12, and 16 bits; the bit-slice bipolar components are beyond the scope of this article. Each size has its advantages and disadvantages. First it should be noted that the optimum word size for a small computer instruc-

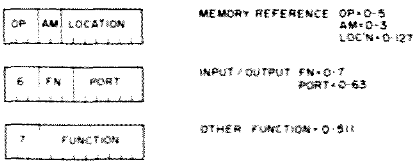

Fig. 1. 12 bit instruction word (PDP-8).

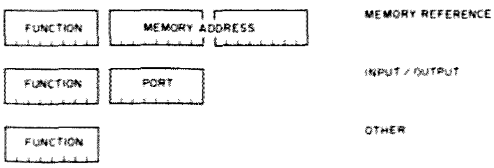

Fig. 2. 8 bit instruction word (8080).

tion is around 12 bits. This permits a few instructions direct access to a small amount of memory, and gives a generous number of bits to the instructions which do not reference memory directly. These are effectively allocated in the PDP-8 minicomputer (and the Intersil 6100, which is the microprocessor version of the PDP-8), as shown in Fig. 1. Three bits are the operation code (that part of the machine language instruction which tells the processor what to do with the data) in memory reference instructions, or serve to distinguish the non-memory reference instructions; two bits define the Addressing Mode, discussed later; the seven remaining bits select one of 128 words in memory. There are six memory reference instructions. Of the two remaining three bit codes, one defines the input/output (I/O) instructions, for which nine bits determine eight different operations on any of 64 different I/O devices (or "ports" as they are sometimes called). There remain yet 512 different possible op codes for the instructions which refer neither to memory nor I/O, though not all of these are meaningful in the PDP-8 instruction set.

The 16 bit computers allow more different instruction op codes for the memory reference instructions and/or a greater instruction address space (the number of memory locations a single instruction can reach) because of the larger word size, but there are wasted bits in the non-memory reference instructions (with only 12 bits the PDP-8 does not use all of the available combinations). The eight bitters, on the other hand, efficiently use the op codes for the non-memory instructions, but there are not enough bits to address a reasonable amount of memory in a single word

Fig. 3. Immediate addressing (8008).

instruction – two or more words are required for this purpose, as shown in Fig. 2. The four bit computers cannot contain their instructions in a single word of four bits; most of them use eight bit memory for instructions and four bit memory only for data.

Twelve bits is not a convenient size for data. Only numbers less than 4096 may be stored in a 12 bit word, so useful numbers often require two words in memory (good for numbers to 16,777,215). Two alphanumeric characters may be stored in one word if they are limited to capital letters, numbers, and a few standard symbols, but if you wish to process the full ASCII character set with lower case and control characters or if (heaven forbid!) you wish to process EBCDIC, then only one character can be fit into a word and the other four or five bits are wasted.

When most of the data to be processed are text characters, an eight bit processor is much more convenient, since each data word holds one character with minimal waste. But the problem with numbers is worse with eight bits than with twelve – the maximum number size is only 255, and two eight bit words still are limited to numbers less than 65,536 (although that is adequate for many needs).

A 16 bit CPU, as we have mentioned, gives more flexibility in the memory reference instructions and also permits a single word in memory to hold numbers to 65,535 or two text characters.

While it would appear at this point that there is no use for a four bit processor, it

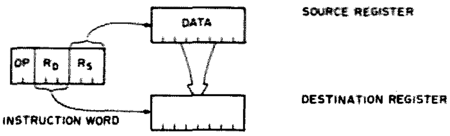

Fig. 4. Register addressing (8080).

actually turns out that when most of the data are decimal numbers or one and two bit status and control signals, a four-bitter is more efficient in processing them. This is because when small pieces of data are buried in larger words, more computer time is required to isolate the data for processing. Thus, four bit processors are ideal for calculators (most calculators these days are actually four bit microprocessors, programmed for the calculator functions) and for logic replacement systems such as process control. The decimal arithmetic capability turns out to be so important in microprocessors that most 8 bit CPUs and even one 16-bitter (National's PACE) have special instructions for this purpose, but the user is stuck with an even number of digits, and decimal multiplication and division is difficult in anything larger than four bits. Consider the advantage of doing all your arithmetic in decimal (people think in decimal, not binary!) so that number conversion routines are not needed. Since more than one memory location is required for any number greater than one digit anyway, you have "infinite precision" (as large a number as you care to handle) at no extra cost.

Another important way to distinguish microprocessors is by the number and quality of CPU registers. In general, more registers result in more compact programs which execute faster. This is because the data for an instruction is already in the CPU, and does not need to be fetched from main memory. The instructions need only a few bits to identify a register, but a whole address is often required for memory data. On the other hand, a few general purpose registers may be more useful than many scratchpad registers which can only be used for loading and storing data. The F8 has 64 scratchpad registers, but only 12 of them are directly accessible to the program, and the others may only be accessed through an indirect address register. This is not as useful as, say, only 32 bytes of scratchpad which can be directly accessed by an instruction (as in the RCA COSMAC CPU), which in turn is less useful than four general purpose accumulators which can be used for calculation and/or index registers (PACE has four accumu-

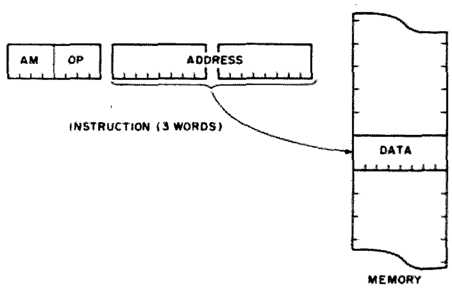

Fig. 5. Absolute addressing (6800).

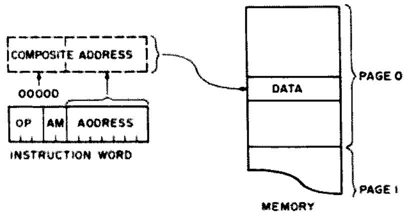

Fig. 6. Base page addressing (PDP-8).

lators, but only two of them may be used for indexing). In a microprocessor the registers may be used for any or all of the following functions:

Accumulators. Arithmetic or logical operations may be done on data in an accumulator, and the result returned to the same register in a single instruction. All of the micros have at least one accumulator. Some have more than one.

Data Memory Pointer. Most of the micros have at least one register which can be used to address memory for data. If the word size is less than the memory address size (as in the eight-bitters), two or more registers may be combined to form an address pointer, or the data pointer may be a double length register. If there is no data pointer (as in the PDP-8), then the CPU *must* have an indirect addressing mode into main memory to handle computed addresses. Often, if the CPU has an indexed addressing mode, the index register(s) will serve the data pointer function. Index registers are a more powerful form of memory address pointer.

Scratchpad. Registers which cannot be used as accumulators or memory address pointers are only good for temporary storage of data, and are called scratchpad registers. Not all CPUs have scratchpad registers. Those that do not must use main memory for temporary storage.

Other. Most CPUs collect the various status flip flops into a "status register." It is not useful for anything else and should not be considered in the same light as the other registers. Many of the micros have a memory address pointer which is used as a "stack pointer" (see *Addressing Modes*, below). It is not wise to use the stack pointer for any other purpose (because of interrupt handling requirements), so this register also has restrictions on its utility. A few processors have other restricted registers, usually used in transferring data between registers.

The different *Addressing Modes* available to the CPU are also an important criterion of rank. A CPU with few registers but many different addressing modes may be more powerful than one with many registers but only a few different addressing modes. The addressing mode of a particular instruction defines how the location of the data is to be determined. Like the number of registers, the more different addressing modes a CPU commands, the more powerful its instruction set is said to be. The following are the most common:

Immediate. The data for the instruction is immediately attached to the instruction. For smaller-word machines this data is usually in the next word in memory, making a two word instruction. For larger words the data is often in the instruction word, but it is limited to less than a whole word. Fig. 3 illustrates the format of immediate addressing. Immediate addressing is usually a very convenient way to load constants into CPU registers, so it is available in most processors.

Register. The data for the instruction is in one of the CPU registers. This is usually the fastest addressing mode, and requires the fewest bits, as illustrated in Fig. 4.

Absolute. The data is in memory, and its address is a part of the instruction, as shown in Fig. 5. The size of this address part determines how much of the system memory is "directly addressable." If the address part of the instruction is less than the address space (the total amount of memory the CPU is able to address at any time), then the address is said to be "abbreviated" and is usually further classified by the way the CPU derives that part of the address which is not specified in the instruction. Many CPUs command both an absolute addressing mode and several varieties of abbreviated addressing modes.

Base Page. In small-word machines it is common to divide the address space into blocks which one word or the address part of one instruction can uniquely address. For 8 bit CPUs this block is 256 bytes, so the total memory is divided into "pages" of 256 bytes each. Eight bits of address can uniquely define one of 256 locations in memory, so many addressing modes are related to the memory in each one of these pages. Which page is accessed is determined by the addressing mode. In particular, one of these pages has a page number (the most significant part of the address of any memory location is the page number) of zero. Page 0 is often specially accessible to instructions in what is called "base page addressing," which requires only one byte of address to access the first 256 bytes of memory. Fig. 6 illustrates base page addressing in PACE. Note that some people use the term "direct" to refer to base page addressing.

Page Relative. Another common abbreviated addressing mode uses the CPU program counter (the instruction address) for the page number, and the instruction specifies the location within the page, as shown in Fig. 7. Most micros with this addressing mode use it only for conditional branches, since the program counter usually is in a page of program memory which may not be appropriate for data. If the location to be reached is in the next page, this addressing mode cannot be used, so CPUs with this addressing mode tend to waste either program memory (by starting new routines on page boundaries) or programmer time (trying to fit them all into the fewest number of pages).

(PC) Relative. In this addressing mode, the abbreviated address is added (as a signed number) to the program counter to give the

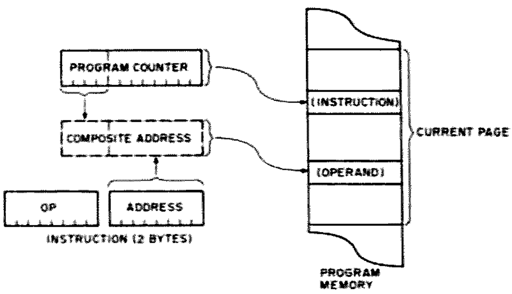

Fig. 7. Page relative addressing (4004).

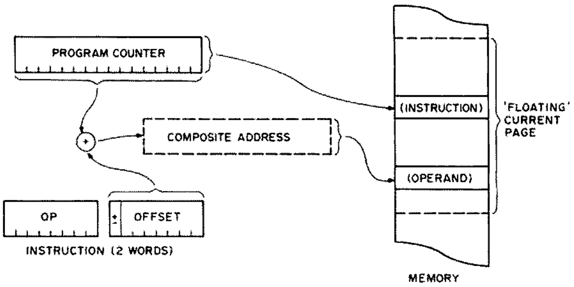

Fig. 8. Relative addressing (F8).

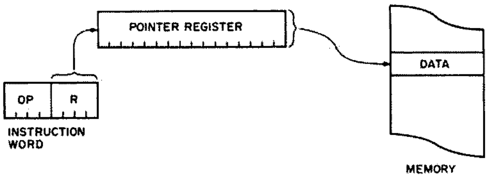

Fig. 9. Register indirect addressing (COSMAC).

operand address (again used only for branches). Thus the page accessible to any instruction seems to "float" around the current value of the program counter, as shown in Fig. 8. This is much more convenient than page relative addressing, since now the programmer need only be concerned with how far the destination is, not with page boundaries. But the cost is generally slower execution (that addition takes CPU time!).

Register Indirect. In this addressing mode the address of the data is in one of the CPU data pointer registers, and not in the instruction at all. As shown in Fig. 9, only one instruction word is required to access any word in memory, but the address must be set up ahead of time. This addressing mode is very useful for processing sequential data, especially if the address register can be optionally incremented (or decremented) simultaneously. Most micros have either register indirect or indexed (see below) addressing, but only a few have auto increment. One form of register indirect addressing with auto-increment and auto-decrement which is included in many CPUs is called "stack" addressing. Usually this is used to save return addresses in subroutine calls and for temporary storage of data. Sequential words of data are stored in (or retrieved from) sequential memory locations by one word instructions. This is slightly less useful than true auto-increment and auto-decrement register indirect addressing, since the programmer does not have the choice of incrementing or decrementing with stack addressing.

Indexed. When abbreviated addressing is combined with register indirect, the result is the indexed addressing mode. The address part in the instruction is added (algebraically if signed, but not all are) to the value in the index register to form the complete address of the data, as shown in Fig. 10. In some processors the address part is not abbreviated, but the index register may be; they cannot both be less than the full address size and still be useful. The indexed addressing mode is very useful for table handling, but more execution time and longer instructions are required for it than for register indirect.

Indirect. Many processors permit the address of the data to be stored in memory, and the instruction contains an abbreviated address pointing to that location. Processors with neither a data pointer nor a full address index register must have indirect addressing to get at tables, data buffers, and other data requiring a variable address. Indirect addressing is almost as convenient as register indirect, but has an additional advantage in that several memory locations may be set up with different addresses which may be accessed at random from different parts of the program. The indirect addressing mode may usually be combined with other addressing modes. Of particular interest is its combination with indexed addressing. Here the index register may be added either to the address part in the instruction to provide variability in the selection of which indirect address to use (called "pre-indexing"), or to the indirect address fetched from memory to provide variability in the data address relative to a given indirect address pointer in memory (called "post-indexing"). Post-indexed indirect addressing is illustrated in Fig. 11. Indirect addressing does not come free: An extra bit in the instruction word must be dedicated to signal it, and extra memory cycles are required to fetch the address.

Aside from what the programmer sees in the CPU, the processors may also be judged on their interface to the outside world. Some micros have several varieties of input and output instructions; others have none. Almost any microprocessor can have I/O devices connected to it that look like memory locations, but those without I/O instructions *must* do it this way. For I/O-intensive applications this may be a nuisance. It also prevents using all of the memory space for memory (if you need that much). On the other hand, I/O instructions use up valuable instruction operation codes, and if the I/O is part of the memory space all of the arithmetic and logical instructions may be used directly on the I/O data (if you feel so inclined; I have yet to see this happen in real programs).

An important distinction sometimes not considered fully is the interrupt capability of the CPU. How many different kinds of interrupt does the CPU support? The 8080 has a single interrupt signal into the CPU, but up to 8 interrupts are easily prioritized in the 8214 Priority Interrupt Encoder, which can provide "vectored interrupt" capability (the interrupting device gives the CPU a memory address indentifying the service routine for that interrupt at the time the interrupt is accepted by the CPU). The M6800 CPU has two interrupt input signals, so that vectored interrupts from two interrupt causes are easy, but for more than that it is much more difficult. Also, the user of the 6800 should be aware that one of those interrupts cannot be disabled and is incompatible with one of the more useful of the CPU instructions. PACE has six vectored interrupts. Unless interrupt service time is critical, vectored interrupts are not essential. In fact, interrupts themselves are not always essential, and some CPUs allow none. I have seen several major programs for CPUs which can support interrupts, but they are not used.

Then there is Direct Memory Access (DMA) for moving data into and out of memory. Only one of the micros (COSMAC) has the DMA logic built into the CPU. A few have DMA controllers in the chip set which supports the CPU. Most of them can be stopped by the peripheral for DMA opera-

	MFG	TECH	POWER	CLK	ADD TIME	WORD SIZE	ADDR SPACE	REG'S	ADDRESS MODES	PAGE SIZE	X	STACK	INT	CPU I/O	I/O PORTS	I/O CHIPS	BCD	ADDR LATCH	PRICE
1600	G.I.	NMOS	+5, +12,-3	2D	2.4	10P, 16D	65K	6G	A,B±,D,I, R,S		16	M 65K		1/0		P,S	0	16	
2650	Signetics	NMOS	+5	1S	4.8	8	32K	A,6G	@,±,I,JA, P,R,X±,@X	8K	8	CPU 8	(64)	1/1	257	0	+	2	$72
4004	Intel N.S.	PMOS	+5,-10	2D	10.8	8P,4D	4KP, 512D	A,16S	BP,D,I,JA, R	256	–	CPU 3	0	1/0	16/32	P	+	4+4+4	$19
4040	Intel	PMOS	+5,-10	2D		8P,4D	8KP, 512D	A,24S	BP,D,I,JA, R	256	–	CPU 7	1	1/1	32/48	P	+	4+4+4	$20
6100 (=PDP/8)	Intersil	CMOS	+4 – +11	XS	2.5	12	4K	A,S	@,P,Z	128	–	0	1	0	64	P,S	0	12	$150
6502	MOS Technology	NMOS	+5	XD	2	8	65K	A,2X	@,A,B±,I,S, X,Z,@X,X@	256	8	M 256	2	0	0	P	±	–	$25
6800	Motorola AMI	NMOS	+5	2D	2	8	65K	2A,X	A,B±,I,R,S, X,Z	256	16	M 65K	2	0	0	P,S	+	–	$34
8008	Intel	PMOS	+5,-5	2D	12.5	8	16K	A,X,4S	D,I,JA,R	–	16	CPU 7	(8)	0	8/24	0	0	8+6	$19
8080	Intel TI AMD	NMOS	+5,+12,-5	2D	2	8	65K	A,3X	A,D,I,R,S	–	16	M 65K	(8)	0	256	P,S	+	–	$30
COSMAC	RCA	CMOS	+5 – +12	1S	5.6	8	65K	A,16X	BP,D+,I	256	16	0	1	4/0	8/8	0	0	8	$40
F8	Fairchild MOSTEK	NMOS	+5,+12	XD	2	8	65K	A,(2X), 64S	B±,D±,I, JA,R	256	16	CPU 1	M	16	256	P	+	(8+8)	$39
Micro Controller	SMS	BI-POLAR	+5	1	.3	16P,8D	4KP, 256D	A,2X, 6S	BP,D,I, JA,R	256	8	0	0	0	256	P	0	–	
PACE	National	PMOS	+5,-12	2D	8.5	16	65K	2A,2G	@,±,I,R, S,X,Z	256	16	CPU 10	6	3/4	0	P	+	16	$125
PPS-4	Rockwell	PMOS	-17	2D	4	8P,4D	4KP, 4KD	A,X,S	@,D,I, JA,JP,R	64	12	CPU 2	0	8/4	16	P,S	+	–	
PPS-8	Rockwell	PMOS	-17	2D	4	8	16KP 16KD	A,2X,2S	@,D±,I, JA,JP,R,S	128	16	M 32	3	0	16	P,S	+	–	
SC/MP	N.S.	PMOS	+5,-7	XS	14	8	65K	A,3X,S	±,D±,I,R,X	256	16	–	1	3/4	0	0	+	4	

LEGEND

MFG *Manufacturer*

TECH *Chip technology*

POWER *Power supply requirements (voltages)*

CLK *Clock requirements: Number of clock inputs,*
- *X On-chip clock may be driven from crystal*
- *S Static — clock may be stopped or run slowly*
- *D Dynamic — clock has minimum frequency*

ADD TIME *Minimum execution time for ADD instruction (some instructions may be faster)*

WORD SIZE *Number of bits; P = Instruction word; D = Data word*

ADDR SPACE *Maximum size of addressable memory*
- *P Program memory (if separate)*
- *D Data memory*

REG'S *Number and kind of CPU registers (one if no digit):*
- *A Accumulator*
- *S Scratchpad, not usable as accumulator or data pointer*
- *X Index, register or data pointer (may consist of multiple separately addressable registers)*
- *G General register, usable as A or X*

ADDRESS MODES
- *@ Indirect (through memory)*
- *± Relative*
- *A Absolute*
- *B (with ± or P) Conditional branches only*
- *D Register Indirect*
- *D± Register Indirect with Auto-Increment, -Decrement*
- *I Immediate*
- *J (with A or P) Jumps only*
- *P Page Relative*
- *R Register*
- *S Stack (i.e., PUSH & POP instructions)*
- *X Indexed*
- *@X Post-Indexed Indirect*
- *Z Base Page*

PAGE SIZE *Number of words in branch page*

X *Number of bits in Index or Data Pointer register*

STACK *Location and number of words; if in CPU, = number of nested subroutine calls*

INT *Number of Vectored Interrupts (parentheses if external encoder required)*

CPU I/O *Number of input and output lines on CPU; single number if bidirectional; otherwise Input/Output*

I/O PORTS *Number of I/O ports addressable by CPU; single number if undifferentiated; otherwise Input/Output*

I/O CHIPS *Peripheral Support Chips available with CPU:*
- *P Parallel I/O*
- *S Serial I/O*

BCD *Decimal arithmetic instructions:*
- *+ Add*
- *- Subtract*

ADD LATCH *Number of address bits which must be latched off the CPU; numbers separated by + indicate multiple time slices*

PRICE *Quantity one price for CPU only; does not include any required support chips. These are published prices at time of writing, rounded to nearest dollar; lowest published price was used; chips meeting speed spec may cost more.*

Blank entries represent information unavailable.

Table 1. Microprocessor comparison.

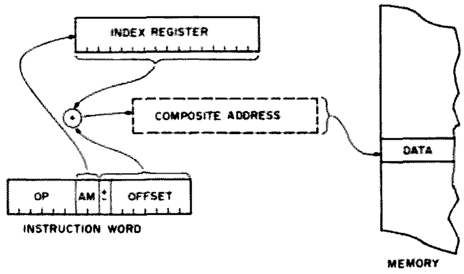

Fig. 10. Indexed addressing (PACE).

tions, and some actually get off the buses when stopped, to make it easier for the DMA logic to work.

Connecting the I/O devices is another problem. The 4004 chip set (my system) has input gates or output latches on every memory device in the family. There are also special I/O devices (4207, 4209, 4211) that connect right on the bus with no extra logic. Motorola came out with some real nifty I/O circuits (6820, 6850) with the 6800, but a certain amount of address decoding is required for all but the most trivial systems. Intel has recently come out with similar circuits, but, as with the 6800 family, plenty of interconnect logic is required. With the 8008 you are on your own. The F8 has lots of I/O right on the CPU and the memory interfaces. Other micros have a few I/O lines on the CPU and require that extra logic for anything over that.

Perhaps one of the more important criteria of distinction to the hobbyist is the interconnection requirements for the processor. How many power supplies are required? Some micros run on +5 volts only; others require +12 and/or a negative supply. If the system uses a 4K RAM memory which needs +12 and -5 volt supplies, a processor with the same requirements is no problem. Some of the processors run on -9 or -12 volts. This could be a nuisance if nothing else in the system needs those supplies. Many of the microprocessors are "dynamic," which means that they require high voltage nonstop clock drivers; even "5 volt, TTL compatible" CPUs may require clocks that swing from 0.2 volts to 4.7 volts, which TTL outputs are not specified to deliver. "Static" CPUs are generally simpler to control because there is only one clock signal to drive, and it can be stopped at any time.

Some of the micros are more easily connected into systems than others, because of the related circuits available from the manufacturers. Is a clock driver available for those odd two phase high voltage clocks? How much extra logic is required to connect standard memory components? What is the fewest number of extra parts that must be added to get a working (special purpose) computer? What happens if I connect a Motorola PIA (M6820 – a good I/O chip) to an 8080 system? Most of these questions are beyond the scope of this article, but they drastically affect how good the resulting computer is.

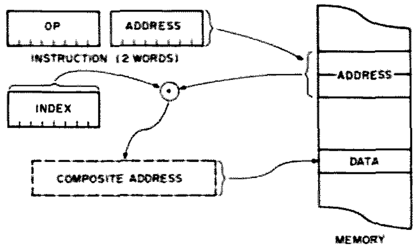

Fig. 11. Post-index indirect addressing (6502).

Table 1 is an analysis of some of the available microprocessors, according to the criteria we have discussed.

As I said earlier, the power of a system is measured largely by the kinds of peripherals available to it. An extremely important peripheral is one providing "off-line storage" in machine-readable form, so that programs can be saved and reloaded without a lot of manual effort. A paper tape reader and punch will do this adequately, but it is slow. Audio cassettes are somewhat faster, more compact, and considerably cheaper. Floppy disc drives are the most versatile for program and data storage, but there does not exist at this time anything for the amateur for less than $2000. This is unnecessary: I bought everything new and spent about $800, but I had to design my own controller.

A second essential peripheral is the human interface. While lights and switches look esoteric, they are not suitable for most programs. The so-called "TV Typewriter" is probably the best human interface you can get for your money. A Teletype with paper tape reader and punch is the cheapest single peripheral to give both machine-readable data storage and the human interface (with hard copy, yet).

Last here, but most important, is the *software*. The computer is worthless without a program. Writing that program and getting it into the computer and getting it to run correctly is not easy. It is harder for some microprocessors than for others. It is harder in some systems than it is in others with the same CPU. Different programmers will find different processors or systems to be easier or harder. But you can be sure all of the good systems (i.e., the ones that are easy to use) represent a lot of programming effort in operating systems, text editors, assemblers, high level language (such as BASIC) processors, and utility programs.

The next time someone tells you that this micro is better than that one, ask why, and for what. I did not mention that I have two operational computers now. One of them has an 8 bit CPU with a powerful instruction set, but I don't use it, because my 4004 system is "better." Better because the peripherals and the software support are better. I also have over a half dozen CPU chips for other processors, but I am unlikely to do more than make toys out of them, because the two systems I have are better. Better because they already have all the connections to memory and power – an operational computer is better than one that is not.

A final note. This manuscript was prepared on my "Half a Computer" using some of my software to edit the text, pull proofs and correct typographical errors. To add or delete a sentence did not require retyping the whole page; the computer did that. If the publisher had wanted, I could have delivered a paper tape to run automatic typesetting equipment. Maybe next year when I can afford a "whole computer" (that's more peripherals, not a different CPU), I will be able to deliver camera-ready copy. Computer power is what the computer can do. ■

John W. Molnar WB2ZCF
Box 561
Ridgefield NJ 07657

Meaningful Conversations with your Computer

-- what those mysterious "languages" are all about

A glance at the advertisements in *73* or almost any other technical rag will reveal a growing number of computer kits, memory boards, and peripheral devices being offered to the home experimenter. The "home" computer field is growing almost as fast as the two meter boom of several years ago. One of the problems always associated with a new field is the tremendous lack of *practical* knowledge possessed by the casual experimenter. The computer freak now has a wide choice of micro kits, input/output devices, and services to choose from, but the big problem remains: How does one COMMUNICATE with his computer? Ah, yes, you have just completed your Super-X microprocessor kit, and plan to use it to store OSCAR orbital data. A simple application? Yes, but there X sits with rows of switches and LEDs, and not calculating a thing. Something is missing – a method of "talking" to, or "programming" the machine, thus enabling it to perform a meaningful task.

The Language Processor

The missing link is the Language Processor, or LP. An LP is a program that allows a computer user to form the unique set of "machine instructions," which are the binary numbers that direct every machine function. The LP is to a computer what the keyboard is to your pocket calculator – it is a man-machine interface that bridges the gap between human requests and machine action. Without a keyboard, your pocket wonder is useless unless you like to collect big IC chips. Without an LP, a computer programmer is forced to form and insert into memory every binary code that forms a program, requiring a knowledge of the internal construction and machine codes unique to every computer.

Programming Your Black Box

A computer performs its task by executing a series of "machine instructions" that reside in the memory of the processor. The ultimate goal of any programmer is to relate the problem to be solved in terms of the machine instructions that the computer understands. This goal may be reached in two ways: by inserting each instruction into memory by "hand," using the front panel switches, after a tedious process of forming the correct codes, or by using an LP to form the codes for you. This LP may be an *assembler, compiler*, or *interpreter*. This article examines, in simple terms, the function of each type of LP, the associated trade-offs, and the benefits of each. Before starting, however, let's take a quick look at how programming works without the LP, bearing in mind that the final goal of any LP is to produce the binary machine code that only the machine understands.

Machine Language

Every computer, be it an IBM 370 or Motorola M6800 micro, has a unique set of "instructions," consisting of binary codes that direct every internal function of the running computer. Most machines are capable of executing certain basic operations, such as moving data to and from memory, addition, subtraction, and shifting (a process of moving "bits" to different locations within the computer). However, the problem is that each machine uses a different code for similar processes, requiring the programmer to know the details of each machine he wishes to use. One "machine language" program for solving the Ohm's Law ($I = E/R$) relationship is shown in Table 1.

The result of the operation expressed in Table 1 is the answer "I" stored in memory location 10, and the remainder of the division in location 12.

Several problems associated with machine language programming are apparent:

1. The code is unintelligible to anyone not specifically familiar with computer "X."
2. A change to the code to fix a "bug" (a common creature around computers) often requires rewriting much of the existing code, especially when more instructions are added.
3. Following the logic of the original program-

	Machine Code	Comment
Start	4830 0000	Fetch "E" from memory
	0722	Clear temporary
	4840 0002	Fetch "R" from memory
	0D24	Perform division
	4030 000A	Save answer "I"
End	4020 000C	Save remainder

Table 1. Typical machine code to solve $I = E/R$. This example assumes that data "E" and "R" were preloaded into the memory.

	Assembly Language		Comment
Start	LH	R3,LOC0	Fetch "E"
	XHR	R2,R2	Clear Register 2 (temporary)
	LH	R4,LOC2	Fetch "R"
	DHR	R2,R4	Divide
	STH	R3,LOC10	Save "1" in Location 10
End	STH	R2,LOC12	And save remainder

Table 2. An assembly language representation of a program to solve I = E/R.

	M6800 Assembly Code		Comment
Start	LDA	A,LOC0	Fetch "E"
	LDA	B,LOC1	and "R"
	JSR	DIVD	Go to Divide routine
	STA	A,LOC2	Save answer "I"
	STA	B,LOC3	and remainder
End	SWI		Done
Divd	******		A software program to
	******		divide, as the M6800 has
	******		no specific divide instruction;
	RTS		Return to calling routine

Table 3. Routine to solve I = E/R on a Motorola M6800 micro.

mer and documentation of the program is difficult, especially when the programmer takes another job.

All computer programming in the early '50s was done in direct machine language – prompting the development of the first type of LP, the *assembler.*

The Assembler – Symbolic Programming Made Possible

The first member of the LP family is the assembler, a computer program that allows machine instructions and operations to be represented symbolically, i.e., in a more human form than rows of numbers. The programmer is still required to know the specific machine instruction set of his computer, but the assembler allows him to refer to instructions by name (or *mnemonic*) instead of number. The end result of an assembly process is a machine language program similar to that in Table 1. The assembler only serves to make the generation of those codes a less tedious process. A sample assembly language program to solve our Table 1 problem is shown in Table 2.

The same program coded for the Motorola M6800 microprocessor is given in Table 3, illustrating the point of how a programmer must know the unique instructions of each machine he wishes to use when programming in assembly or machine language.

Several shortcomings of machine language programming are resolved by using an assembler. For example, changing or correcting the program requires only a "source" change, usually done by changing the punched card in error. The complete program is then reassembled, causing the output of correct machine code. The assembly process removes the requirement that the programmer know in advance how his change affects the code in instructions around the correction. Documentation of the program is easier also, as the symbolic representation of the machine code is understood by anyone familiar with the machine. Software development cycles are speeded up, as correction and modification of programs does not require extensive code changes.

Most microcomputer manufacturers provide an assembler with their micro kits. However, most assemblers require a large amount of memory to function, recalling that the assembler itself is a program coded in the machine code particular to a given microcomputer.

The Compiler – Or, Programming in English

The assembler LP greatly increased the capability of man to talk to his computer, but the basic restriction of having to know internal details and procedures still remained. An ultimate LP was required, one that allowed programmers to function in an English language environment. The first such LP was a language known as *FORTRAN*, a program dedicated to "*FOR*mula *TRAN*slation." FORTRAN is an LP that lets programmers represent problems as they occur on paper or textbooks, in English. This type of LP is often referred to as a "high level language": the higher the level, the more English-like the representation of instructions. Most high level LPs allow the program to contain notation and conventions that would normally be used to describe the problem, thus allowing the programmer to concentrate on the solution of the problem, not the internal workings of a computer. Using our old Ohm's Law example, Table 4 shows what the FORTRAN program looks like.

The power of the high level LP is provided by a very complex and large program. From Table 4 it can be seen that the single statement expressing the formula really requires several machine instructions (Table 1). A single complex FORTRAN statement may produce 50 or 60 machine instructions. (Remember, that's all the processor knows!) The real beauty of a *compiler*, the high level LP, is that the same source program may be run on any machine capable of supporting the compiler. The compiler for each machine knows that the incoming program is in a standard format (as defined by standards committees), so it must produce the unique machine code to solve the problem. It can be seen that each FORTRAN compiler will only run on the machine it supports, but the

```
C         Comment – Divide E by R giving I
C
C
          I=E/R
          STOP
          END
C         That's it – of course other instructions are
C         needed to input the raw data.
```

Table 4. A typical FORTRAN program.

```
1  REM Read E and R, then calculate and print I
2  INPUT E,R
3  LET I=E/R
4  PRINT "ANSWER IS = ",I
5  STOP
```

Table 5. A BASIC program that accepts input from a terminal, calculates the answer, and prints out the result, all in three statements. (Line 1 is a comment; line 5 needs no explanation.)

standard source program (written by a programmer) will be accepted by any compiler. This concept, known as "computer independence," is the foundation of the programming profession. A programmer used to coding IBM 370 FORTRAN can be writing programs on an INTERDATA minicomputer the day he changes jobs, as the LP takes care of the nitty-gritty details of producing the different machine code.

FORTRAN is not the only high level LP. A few seconds spent scanning any computer trade publication will reveal names such as *COBOL* (*CO*mmon *B*usiness *O*riented *L*anguage), *APL* (*A P*rogramming *L*anguage) or *JOVIAL* (believe it or not – *J*ule's *O*wn *V*ersion of the *I*nternational *A*lgorithmic *L*anguage). Each of these LPs has a source input format suited to a particular application. COBOL, for example, is well suited to business applications, such as payrolls, but finds little use in the scientific community.

The Interpreter – A Micro's Best Friend

Compilers are available for all large computers and most minis, but due to their complexity and cost have not filtered into the micro world yet. It often takes several man-years to develop a compiler and write it in assembly language, so it will be awhile before you can load up FORTRAN on your brand X micro and track OSCAR, even though the capability is there to do it in assembly language. Take heart, however – all is not lost. There is an alternative to the compiler available to microcomputer programmers – the *interpreter*. This LP offers most of the advantages of the compiler with one difference – no machine language is produced from the source program. Instead, the interpreter processes the incoming source statements "on the fly," and produces the answer or results by executing a series of built-in routines triggered by the "commands" produced by the programmer. The most popular interpreter is *BASIC* (*B*eginner's *A*ll purpose *S*ymbolic *I*nstruction *C*ode). Take a last look at our example, this time done in BASIC (Table 5).

Hopefully, the above explanations have taken some of the mystery out of the word "programming." A careful look at the microprocessor kit advertisements will reveal what LPs are available for your application. An assembler is required for all but the most simple applications, and BASIC is available for some of the machines – a big plus if you can afford the necessary memory to contain the interpreter. Even machine language programming can be fun on a micro, and there is probably no better way to learn the ins and outs of computer architecture. The programming tricks learned can always be applied to your next effort, even one using a high level LP. So have fun, and GOOD PROGRAMMING! ■

A Baudot Monitor/Editor System

--program listing for the 8080

Richard Whipple
305 Clemson Dr.
Tyler TX 75701

John Arnold W5CUD
RFD 4, Box 52A
Tyler TX 75701

In an earlier *73* article, we described interfacing a Baudot teletype with a hobby computer. Once this hardware interconnection is made, the next step is to develop a software operating system that takes advantage of the keyboard/printer link to the computer. In this article we describe a program called Baudot Monitor/Editor, or BM/E for short. With it you can store, examine, and execute machine language programs using the Baudot teletype. This is quite an important step on the road to full utilization of your computer.

Why a BM/E Operating System?

Entering a program into memory via the front panel switches can be a lengthy and tedious process. Loading a three or four hundred byte program by hand will just about end the pleasure of owning a hobby computer. The limited usefulness of the front panel as a functional I/O device can be traced to the restriction of lights and switches to two states, i.e., "on" and "off." Thus entry must be in binary notation, which is perhaps the least efficient system for human use. The more satisfactory octal or hexadecimal systems cannot be used, since they require eight and sixteen states respectively. Adding a Baudot teletype can be viewed as a way of expanding the number of I/O states available to the user from two to sixty-four (upper and lower case characters). BM/E is in a sense a translator from the internal binary form to external octal format on the teletype. In addition, having the set of letters and symbols available opens up the possibility of developing a higher level language whose instructions can be entered in English words and phrases. The computer can thus be made to function on a more human level. BM/E is just a start on the path to such a higher level language, but it is an important step for someone who wants to learn about computers from the ground up.

Letter Command	Name	Description
D	Dump	Outputs contents of consecutive memory locations in octal
L	Load	Permits storing octal instructions in consecutive locations
E	Edit	Single locations can be examined and, at the user's option, changed
M	Message	Places the computer in a mode that echos the keyboard on the printer
X	Execute	Starts program execution at a specified address

Table 1.

Understanding Octal Number Representation

Before detailing the operation of BM/E, a short explanation of octal numbers should be made. As already noted, computers use binary format to represent instructions and addresses. Long strings of 1s and 0s, though handled readily by a computer, are difficult for humans to work with or remember. For instance, to specify an instruction at a certain memory location, one would have to write:

Address
0101011011001110
Instruction
11001101

Now suppose you were writing a 500 or 1000 byte program using this binary notation — I wonder which would run out first: your patience or the paper supply?!

Enter "octal notation" to save the day! By expanding the number of symbols from two to eight, the complexity of the binary representation can be reduced considerably. The example above can be written:

Address
126 316
Instruction
315

The improvement from the human standpoint is obvious.

The rewriting of a binary number in octal is accomplished in the following way:

1. Separate the binary number into three digit groups beginning at the rightmost digit.
2. Use the chart below to give each group its octal value.

Binary	Octal
000	0
001	1
010	2
011	3
100	4
101	5
110	6
111	7

3. If the leftmost group has less than three digits, just consider that it is prefixed as required with zeros.

Example:
01010110
(Binary)
1 2 6
or
126
(Octal)

Instructions and data for an eight bit computer such as the Altair 8800 can be represented as a three digit octal number ranging from 000 to 377. A sixteen bit address is most easily represented by two octal numbers obtained by first splitting the sixteen bits into two eight bit groups.

Example:
0101011011001110
(Binary)
01010110 11001110
(Split Binary)
1 2 6 3 1 6
126 316
(Split Octal)

Split octal address representation is useful because it fits the format of multibyte instructions used by microprocessors like the 8080 and 8008. The left octal number is referred to as the page, while the right octal number is the location of the given page. The example address would be stated as "location 316 on page 126 of memory." Thus, in a 65,535 word memory; there are 377 octal pages with 377 octal bytes per page. In further discussion of BM/E, split octal addressing will be used exclusively.

Sometimes it is necessary to convert an octal number to its equivalent. Suppose the three octal digits are given by XYZ. The decimal value can be calculated using the expression:

Decimal Value =
$X \cdot 64 + Y \cdot 8 + Z$
Example:
325 octal =
$3 \cdot 64 + 2 \cdot 8 + 5 =$
149 Decimal

To convert to decimal a 16 bit address written in split octal, first convert the page and location separately as given above. Then use this expression to complete the calculation:

Example:
025242 Split Octal
025 Octal =
$0 \cdot 64 + 2 \cdot 8 + 5 =$
21 Decimal
242 Octal =
$2 \cdot 64 + 4 \cdot 8 + 2 =$
94 Decimal
025242 Split Octal =
$21 \cdot 256 + 94 =$
5474 Decimal

D (Dump octal): This mode provides a listing of consecutive memory locations beginning at an address specified when the mode is first called. Listing continues for a specified number of eight byte lines. After entering this mode from the Monitor, the computer prints a colon prompt to indicate it needs the starting address. The user enters the six digit split octal starting address. The computer responds with a SPACE and awaits user entry in octal of the number of eight byte lines desired.
Example:
!D:010000 002 CR&LF
010000 110 123 204 315 112 010 365 325 CR&LF
010010 325 306 214 176 361 321 125 115 CR&LF !
After dumping two lines as required, the system returns to the Monitor and awaits another command. Notice that only the address of the first byte of each line is printed. This produces a quicker and denser listing. The addresses of the remaining bytes can be easily obtained by counting in octal from the known first byte address.
L (Load octal): In this mode the user can store octal data into consecutive memory locations. After entering this mode, a colon is printed to indicate that the computer needs a starting address for the load. When the address is entered, the computer echos the starting address and waits for the user to enter the first data byte. After the entry, the computer will issue a SPACE and wait for entry of the next data byte. A new line and the current address are output after eight bytes are entered. Return to the Monitor at any time is accomplished by typing a BLANK.
Example:
!L:004000
004000 101 102 103 115 126 135 315 246 CR&F
004010 226 (Blank Key)
!
E (Edit): The E mode is used to examine and, if desired, change specific locations in memory. After entering this mode from the Monitor, the computer prompts with a colon. The user then types the address to be examined. The computer outputs a SPACE plus the contents of the specified location. At this point the computer waits for the user to type either a CARRIAGE RETURN if no change is desired, or a minus sign if a change is wanted. In the latter case, the new data byte is entered following the minus. The new octal value is stored at the specified location, then re-examined and printed again as a check to be sure it has been changed. The system remains in the E mode until a BLANK is typed.
Example:
!E:010000 123-321-321
:010000 321 (Carriage Return)
:(Blank)
!
M (Message): This is simply an echo routine so that the keyboard/printer can be used as a typewriter. In this mode, a CARRIAGE RETURN produces an automatic LINE FEED. Return to the Monitor is accomplished by typing the BLANK key.
Example:
!M THIS IS A TEST. (Blank)
!
X (eXecute): This mode permits execution of programs already stored in memory. After entering the X mode, the computer will type a colon and await entry of the starting address of the program to be executed. To actually begin execution, a CARRIAGE RETURN must be typed. Any other character will cause a return to the Monitor.
Example:
!X:012000 (Carriage Return)
Program execution continues at 012000

Table 2.

BM/E uses octal notation to store and examine data in memory. Instructions and data are written as 3 digit octal numbers. Addresses are written in split octal with no separating mark between page and location. Although octal might appear strange at first, its resemblance to decimal will encourage your quick adjustment to it.

Basic Structure of BM/E

BM/E has two levels of operation: the Monitor (highest level) and the Editor (lowest level). Upon entering BM/E, an exclamation mark is printed to indicate the

000000	061	377	001	303	021	000	076	010
000010	315	215	001	076	002	315	215	001
000020	311	315	006	000	076	015	315	320
000030	001	076	037	315	215	001	315	304
000040	001	376	022	312	300	000	376	011
000050	312	341	000	376	035	312	015	001
000060	376	001	312	036	001	376	034	312
000070	110	001	000	000	000	000	000	000
000100	000	076	031	315	215	001	303	021
000110	000	305	345	315	304	001	041	146
000120	000	006	012	276	312	141	000	043
000130	005	302	123	000	076	377	341	301
000140	311	005	170	341	301	311	030	006
000150	007	025	020	012	001	023	027	026
000160	365	346	007	057	074	306	157	345
000170	157	046	000	176	341	315	215	001
000200	361	311	305	016	003	227	027	027
000210	027	107	315	111	000	376	010	332
000220	232	000	076	031	315	215	001	303
000230	212	000	200	015	302	206	000	301
000240	311	247	305	006	003	027	027	027
000250	315	160	000	005	302	245	000	301
000260	311	076	016	315	320	001	315	125
000270	001	076	004	315	215	001	311	000
000300	315	261	000	315	006	000	315	136
000310	001	076	004	315	215	001	315	215
000320	001	315	202	000	167	043	175	346
000330	007	312	303	000	076	004	303	316
000340	000	315	261	000	315	202	000	107
000350	315	006	000	315	136	001	076	004
000360	315	215	001	315	215	001	176	315
000370	241	000	043	175	346	007	312	006
001000	001	076	004	303	363	000	005	302
001010	350	000	303	000	000	315	261	000
001020	315	304	001	376	010	302	000	000
001030	315	013	000	351	000	000	315	261
001040	000	176	315	241	000	315	304	001
001050	376	003	312	063	001	315	006	000
001060	303	036	001	315	202	000	167	076
001070	003	315	215	001	176	315	241	000
001100	303	055	001	000	000	315	215	001
001110	315	304	001	376	010	302	110	001
001120	076	002	303	105	001	315	202	000
001130	147	315	202	000	157	311	174	315
001140	241	000	175	315	241	000	311	305
001150	325	001	000	005	333	376	037	332
001160	154	001	026	030	315	271	001	333
001170	376	037	171	037	117	026	020	315
001200	271	001	005	302	167	001	171	017
001210	017	017	321	301	311	305	325	365
001220	006	005	007	117	227	323	376	026
001230	020	315	271	001	171	017	117	346
001240	001	323	376	026	020	315	271	001
001250	005	302	234	001	076	001	323	376
001260	026	020	315	271	001	361	321	301
001270	311	076	214	075	302	273	001	025
001300	302	271	001	311	315	147	001	315
001310	215	001	376	000	312	000	000	311
001320	365	076	033	315	215	001	303	337
001330	001	365	076	037	315	215	001	361
001340	315	215	001	311	056	042	000	000
001350	000	000	157	146	040	164	150	145
001360	040	042	000	000	000	000	000	000
001370	000	000	000	000	000	000	000	000

Table 3.

Routine	Function	Calling Address
CRLF	Outputs a Carriage Return followed by a Line Feed	000006
BDBIN	Inputs a Baudot number from the keyboard and converts it to binary in register A	000111
BINBD	Outputs binary value in A on the printer; the binary value must be 7 or less	000160
OCTIN	Inputs 3 octal digits from keyboard into A	000202
OCTOUT	Outputs the value of A as 3 octal digits	000241
ADRSIN	Inputs 6 octal digits from keyboard into registers H and L	001125
ADRSOUT	Outputs the value of H and L in split octal	001136
INPUT	Inputs the Baudot value from the keyboard into A	001147
OUTPUT	Outputs a Baudot value on the printer	001215

Table 4.

monitor level is in effect. From the Monitor, entry is made to one of the Editor levels by typing a one letter command. The Editor mode includes the commands shown in Table 1.

Some of the Editor modes have a specific job to perform and afterwards return automatically to the Monitor level. Other Editor modes are terminated by the user when he strikes the BLANK key on the teletype. To change modes, it is necessary to first return to the Monitor and then select the new Editor mode. A more complete description of each mode is shown in Table 2, including example output. Underlined portions of the output were entered by the user, while the remainder was produced by the computer. To simplify operation, the computer controls the printer case (LTRS and FGS).

Bringing Up BM/E for the First Time

Loading the 500 or so bytes of BM/E for the first time will require exercising the front panel switches and your patience. The switches will survive, but, as for your patience, that depends on how interested you are in BM/E. Loading it once by hand is enough, but without some form of nonvolatile mass storage you may be forced to load it each time the system is down. There are two directions to go here: cassette tape or punched paper tape. For the long term, the cassette is probably the best choice. It is much denser and faster. One problem so far has been the lack of agreement on just what type of cassette system to use. Various efforts have been instituted to bring about standardization, but as of this writing there are still obstacles to general acceptance of any one system. The so-called "Kansas City Standard" system appears well on the way, but it is not yet in general use. In our own system we have used a Suding cassette interface for nearly a year without a single bad load. We were attracted to the system because it was FSK and used the wide frequency shift standard of amateur radio (2125 Hz-2975 Hz). Information on a Suding interface can be obtained from The Digital Group, P.O. Box 6528, Denver CO 80206.

Baudot teletype users also have the option of bringing paper tape on-line as a mass storage medium. An article in an earlier issue of *73* described the use we have made of Baudot paper tape equipment. Although not as dense or fast as cassette tape, it is convenient to use, especially for short programs.

In addition, if you have your Baudot teletype on-line already, no additional interfacing is required to use paper tape equipment. It should also be pointed out that paper tape is already standardized, so interchange problems are minimized. Regardless of the system you use, a nonvolatile storage medium is a necessity in a hobbyist system.

Table 3 is an octal listing of BM/E in the Dump format of BM/E. The program is intended for an 8080-based system. As given, it utilizes the software I/O described in the previous article. If you are using a serial I/O board, your required I/O routines should be loaded at 001147 input and 001205 output. Neither routine should exceed 38 bytes.

When the program is loaded, simply examine 000000 and hit RUN. An exclamation point typed on the printer indicates BM/E is operative. You can load programs anywhere above 002000. You should exercise the various Editor modes to be sure all is well.

Table 4 gives the address of various routines in BM/E that can be called by your external programs. For instance, suppose you want to output the A register in octal format. Simply place a CALL to 000241 at the appropriate place in your program.

The authors will supply a source listing of BM/E along with a Suding cassette, "Kansas City Standard" cassette, or punched paper tape (5 level binary format) for $7.50 postpaid. In your order please specify which type cassette or paper tape. Orders should be addressed to: BM/E Tape, Rt. 4, Box 52A, Tyler TX 75701.

With hard copy on your Baudot teletype and BM/E as an operating system, you should be able to greatly expand your software capabilities. ■

Fig. 1. IC1: SN74132N. IC2: SN7486N. IC3: NE556. All resistors are ¼ Watt, except for the one which is ½ Watt, 39 Ohms. Power supply current is approximately 70 mA.

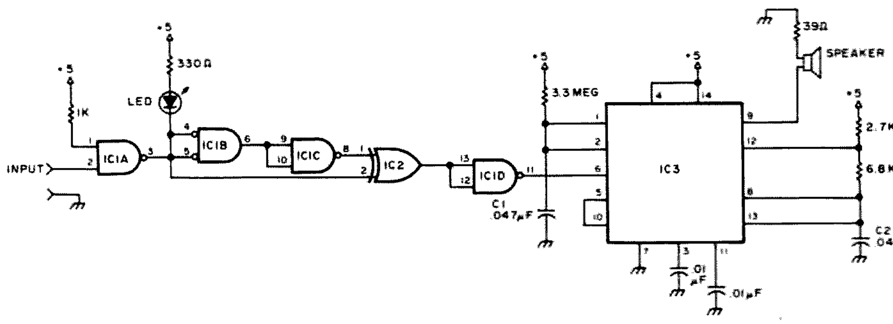

Ted Lincoln WA6HWJ
410 Bell Ave.
Santa Ana CA 92707

A Logic Probe You Can Hear

--good not only for the blind

The most serious shortcoming of conventional logic probes is the need to watch for signs of a change. It's not always convenient to be watching the probe during a test.

This unit gives an LED indication of the static state of the line under test. When the LED is lit, the line is logic state "1." Any logic transition which lasts at least 50 nanoseconds is detected, and an audio beep is generated. Both a "1" to "0" and a "0" to "1" transition are detected.

Construction

My unit is built on a perforated epoxy board. Discrete components are mounted on a 16-pin header which plugs into an IC socket. Sockets are mounted by installing printed circuit board eyelets under pins 7 and 14. Each eyelet is peened in its hole by using opposing automatic center punches. The sockets are mounted, and pins 7 and 14 are soldered to the eyelets. The rest is a simple wirewrap job.

It is possible to run the device from batteries, although the current is a bit high (about 70 mA). Rather than use batteries or steal power from the circuit under test, I decided to include a small power supply. Everything is mounted in a small phenolic box of the type carried by Radio Shack.

Operation

There is no special procedure. Simply connect the input to the line to be monitored, and a ground between this device and the one under test. Once connected, an audible beep will be heard whenever the line pulses or changes state. The LED indicates the line's static state.

Theory

The input is squared by (Schmitt) IC1A, which is also the LED driver. IC1B and IC1C provide a delay before applying the signal to the exclusive OR gate, IC2. When the input changes state, the two signals applied to the exclusive OR gate will be different for a period equal to the delay through IC1B and IC1C. The gate will pulse low for this time. After inversion by IC1D, the positive pulse is applied to the first half of the NE556 (IC3). This half is wired as a one shot with a duration of approximately one half second. The output of this one shot is applied to the second half of IC3, which is wired as an audio oscillator. When the one shot is active, it turns on the oscillator, which in turn drives the speaker. Changing C1 will adjust the duration of the beep; C2 determines the output tone.

Troubleshooting

During initial wiring, leave out the jumper between pin 5 of IC3 and pin 10 of IC3. Check the power supply to be sure it is +5 V. Plug in IC3. The oscillator should be heard running. This is a good time to vary C2 if you would prefer a different tone. After the tone is working properly, connect the jumper between pin 5 and pin 10 of IC3. Plug in IC1 – but not IC2. Touch pin 12 of IC1 momentarily to ground. The oscillator should beep for approximately one half second. C1 can be adjusted to vary the beep duration.

The LED should be lit. Touching pin 2 of IC1 to ground should make the LED go out. Insert IC2 and test the complete unit. Short the input (pin 2) of IC1 to ground. The LED should go out and the oscillator should beep. Remove the short and another beep will occur.

If you want to test its ability to capture a pulse, I suggest wiring a one shot (such as an SN74121) as a switch deglitcher. This device will capture the pulse every time the switch is pushed. ■

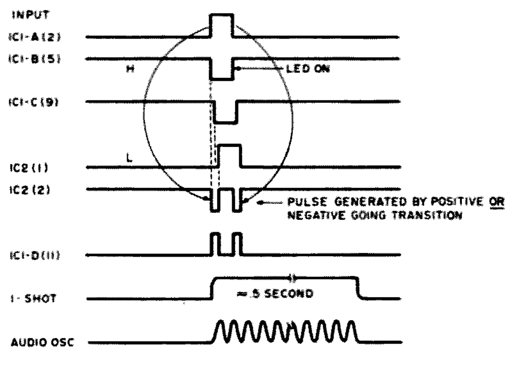

Fig. 2. Timing diagram.

George R. Allen W1HCI
80 Farmstead Lane
Windsor CT 06095

How Computer Arithmetic Works

-- do-it-yourself experiments

The easiest and most inexpensive way to get started in computers is to begin with inexpensive, easy to use, fundamental building blocks. These fundamental blocks can be used initially for educational purposes to promote understanding and confidence, and later combined to form a fundamental computer.

The arithmetic logical unit (ALU) is a fundamental part of a typical computer system. The ALU is inexpensive, is easy to use, and may be operated independently or in conjunction with other devices. This article uses the ALU as a stand alone device in order to demonstrate computer operations such as addition, subtraction, and complement. All necessary details and related information are given so that the experimenter can learn fundamental computer arithmetic.

The dollar outlay required to procure the parts and equipment needed to perform the experiments given in this article should be less than $12, not counting a breadboard or PC board.

The Parts and Equipment Required

The parts and equipment needed to perform the experiments in this article are as follows:

1 – 5 V power supply
1 – 74181 integrated circuit
1 – breadboard, perforated board, or homemade PC board
1 – voltmeter or 4 LEDs

A 5 V power supply may be purchased in kit form from James Electronics for $9.95, or a wired and test supply may be purchas from Micro Digital Corp., f $24.50. A 5 V power supp may be built in breadboa fashion, for about $6.00, using the circuit described Fig. 1.

The 74181 ALU is av: able from many sources, su as Poly Paks, James El tronics, International El tronics Unlimited, and othe for less than $4.00. See ads in this issue for curr prices. An illustration of pin connections and c

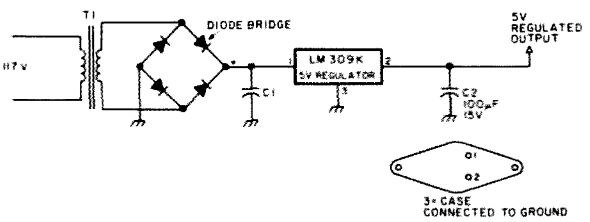

Fig. 1. Simple power supply. T1: 12 V, 1 A (Poly Paks 92CU2474, $2.95). Diode bridge: 2 A, 50 V epoxy (Poly Paks 92CU1346, $.69). C1: 3500 uF (minimum), 25 V dc (S. D. Sales, $.79). C2: 100 mF, 15 V dc (James Electronics, $.24). LM309K: 5 V regulator (Poly Paks, $1.50). Total power supply parts cost: $6.17.

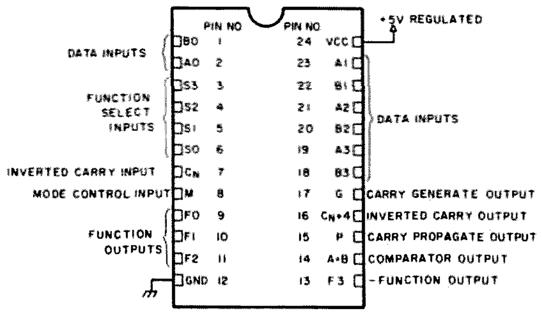

*Fig. 2. 74181 pin connections, top view (*The TTL Data B for Design Engineers, *Texas Instruments, Inc., 1973, p. 3*

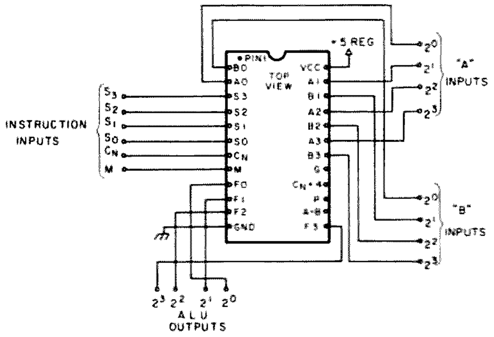

Fig. 3. Basic experimental setup. Bring instruction inputs out to left as shown. Bring function outputs either out to bottom or out to left, in order shown. Connect +5 V regulated power supply to pins as shown. Bring inputs out to right as shown.

Fig. 4. LED readouts. LEDs are Poly Paks 92CU1790 low current LED MV-55.

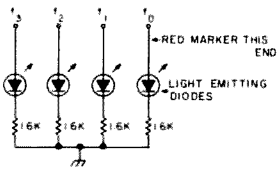

layout is shown in Fig. 2.

The user may etch his own PC board or may use perforated board if he wishes; however, a universal breadboard such as a Continental Specialties QT-59S ($12.50) or AP Products 923261 Terminal Strip ($12.50) will make things a lot easier. With the universal breadboard, no soldering is required, as all connections are made with #22 AWG solid hookup wire. The breadboard is recommended to facilitate circuit changes and additions to the experiments.

Some type of indicator is needed to display the outputs of the ALU. A 20,000 Ohms/volt voltmeter (which will read 0-5 volts), a dc oscilloscope, or a series of light emitting diodes may be used. The circuit in Fig. 4 shows 4 LEDs connected to the ALU to indicate HIGH (1 bit) and LOW (0 bit). The LEDs used are type MV-55, available from Poly Paks (5 for $1.00, part number 92CU1790).

The Experimental Setup

The basic experimental setup is shown in Figs. 4 and 5. The instruction lines are brought out to the left, the data inputs are brought out to the right, and the outputs are brought out to the bottom, or lower left. The input, output, and instruction connections may be made to terminal strips, vacant connections on the breadboard, or to other suitable terminations. Pin 24 is connected to plus 5 V from the power supply, and pin 12 is connected to the power supply ground.

The outputs from the 74181 will either be HIGH (H) or LOW (L) voltage levels. A HIGH will be 2.4 volts minimum, but not greater than 5 V. A LOW will be .4 V or less. A 20,000 Ω/V voltmeter may be used to read the output levels, or LEDs may be connected as shown in Fig. 4. If the LEDs are used, a lighted LED will be a HIGH and a non-lighted LED will be a LOW. In these experiments, a "0 bit" is represented by a LOW while a "1 bit" is represented by a HIGH.

Ground Rules and General Notes

1. The 74181 will operate over a range of 4.75 V to 5.25 V. Operating with voltages outside this range may produce results which are not defined. Operating with a voltage greater than 7 V (the absolute maximum rating) may damage the chip.

2. Don't short the outputs to ground. If more than one output in a HIGH state is shorted at one time, the chip may be damaged.

3. A previous article, "Two Finger Arithmetic,"[1] should be read thoroughly and kept handy as a reference when performing the experiments described.

EXPERIMENTS

Data Transfers

Connect the ALU as shown in Fig. 6. Note that 6 connections form the "instruction word" and are used to select the function of the ALU chip. As connected, this "instruction" will permit data to pass directly from the "A input" to the "output" without changing. The data appearing at the A input is a 0110 and is transferred directly to the output, without change, as a 0110.

The data transfer is a useful instruction within a computer, as it permits data to be transferred from one memory location to another memory location without being changed. Thus, data may be duplicated or placed in a more convenient memory location.

Clear or Set to Zero

Fig. 7 shows the instruc-

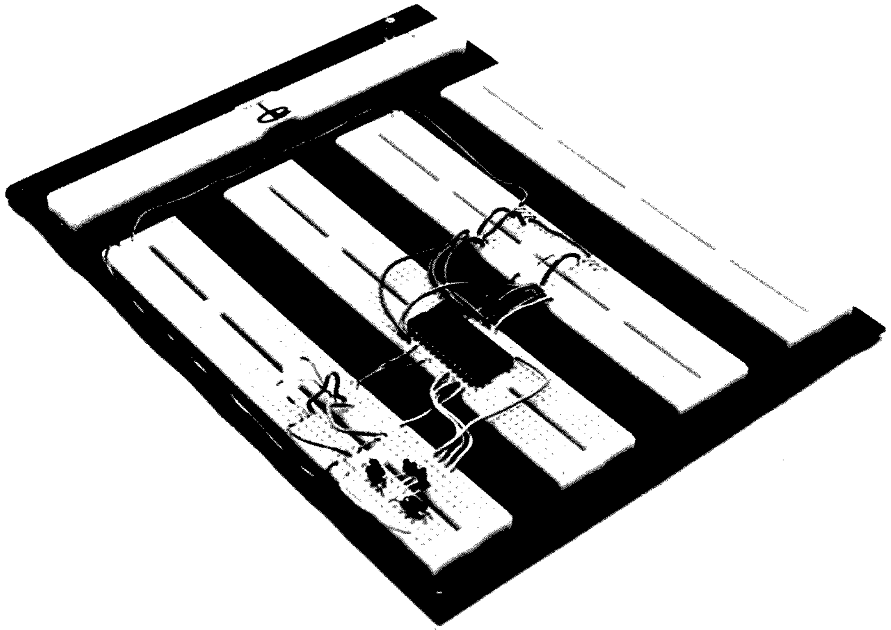

Fig. 5.

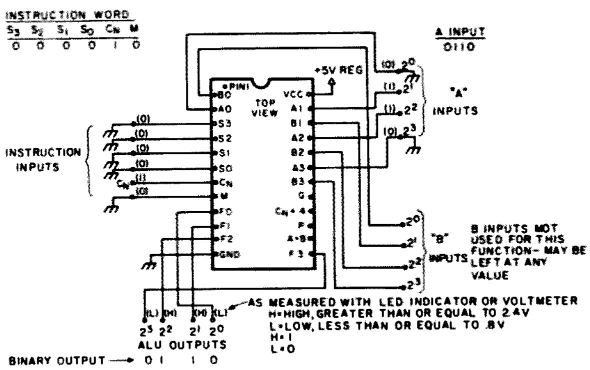

Fig. 6. Data transfer. Output = input from A.

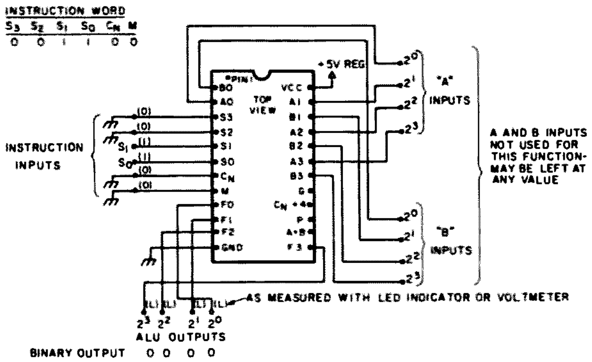

Fig. 7. Clear or set output to zero.

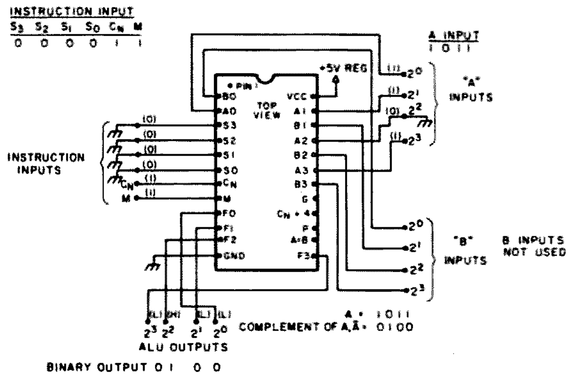

Fig. 8. Ones complement of A.

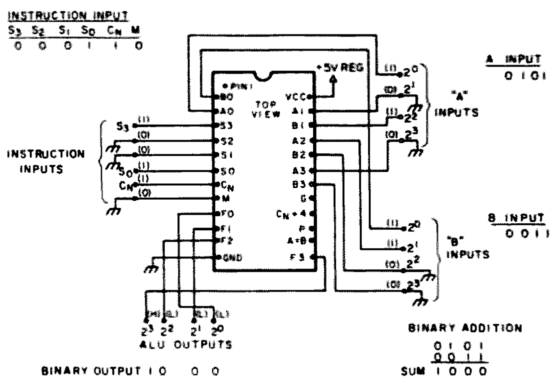

Fig. 9. Binary addition. Output = A plus B.

tion word (or instruction inputs) required for a clear or set to zero. This instruction sets the output to zero, regardless of the data appearing at either input.

This instruction is useful for setting the initial value of a storage location to zero for counting or other purposes. When counting within a computer, a programmer may add "one" to the contents of a memory location every time a given event occurs. To insure a correct count, the contents are set to zero or "initialized to zero" before the count starts.

Complement

The complement of a number can be obtained by using the instruction word as shown in Fig. 8. The data input is 1011 and the output is 0100, which is the complement of the input.

Addition

Addition is performed by using the experimental setup as shown in Fig. 9. The output will be the sum of the data on the A and B inputs. Thus, as shown,

$$\begin{array}{rl} 0101 & (5_{10}) \\ +\,0011 & (3_{10}) \\ \hline 1000 & (8_{10}) \end{array}$$

Similarly,

$$\begin{array}{rl} 0011 & (3_{10}) \\ +\,1010 & (10_{10}) \\ \hline 1101. & (13_{10}) \end{array}$$

But now add A and B as follows:

$$\begin{array}{rl} A = 0111 & (7_{10}) \\ B = 1011 & (11_{10}) \\ \hline 1\;\;0010 & (18_{10}) \end{array}$$

carry bit

The ALU has only 4 data outputs; thus, the results will appear as 0010. This simple arithmetic operation has exceeded the capability of the ALU. We call this an "overflow" condition and say that "overflow" has occurred and that a "carry" has been generated.

Overflow is the phenomenon that separates binary arithmetic from computer arithmetic. When performing binary arithmetic on paper with a pencil, number size limitations are of little concern (you can always add another sheet of paper). When doing arithmetic with computer elements, number size is a serious concern since there is a hardware limit to the size of the "arithmetic word." In these experiments, the "arithmetic word" size is 4 bits. If we connected two ALUs together, we would have an 8 bit "arithmetic word." With an 8 bit arithmetic word, overflow would not occur and a carry bit would not be generated until a sum exceeding 8 bits was generated.

If overflow were to occur without the user being aware of its occurrence, erroneous results could occur. For this reason, it is important to have the capability to detect the occurrence of overflow. Overflow can be detected on the 74181 chip by monitoring the output of pin 16, the inverted carry output. This output is normally used to feed a "carry" input on another 74181, but it may also be used to detect the occurrence of a carry bit (overflow). This output is inverted, so it would normally read HIGH with no carry and LOW if a carry occurred. An LED may be connected to the carry output as shown in Fig. 10, so that the LED will light if a carry or overflow is present.

By connecting the addi-

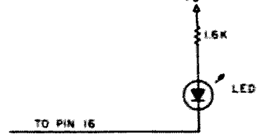

Fig. 10. LED connected to carry out.

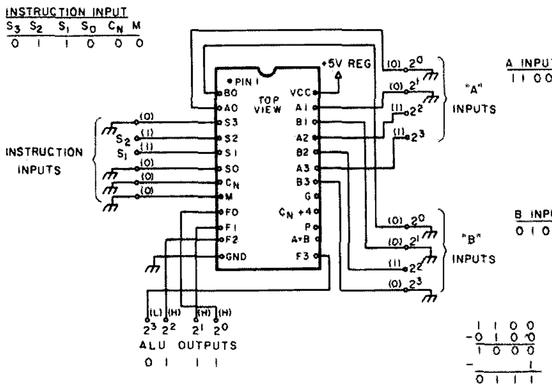

Fig. 11. Subtraction: A minus B.

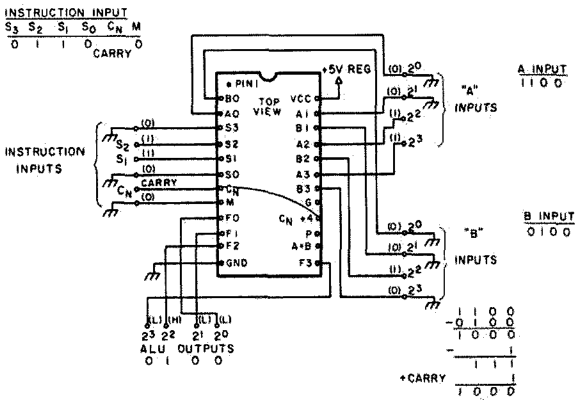

Fig. 12. Subtraction: A minus B, plus carry.

tional LED as shown in Fig. 10, we have gained an additional bit for arithmetic. We have a 4 bit arithmetic word, but we are able to display a five bit result.

For example:

```
  1 1 1 1   (A input)
+ 1 1 1 1   (B input)
1 1 1 1 0
↑
(the fifth bit, the LED for
carry, will be lit)
```

Subtraction

Subtraction using twos complement arithmetic is done by using the instruction shown in Fig. 11. This experiment shows an example of A-B. The 74181 performs the following functions in order to effect a subtraction:

1. The twos complement of the B input is obtained by complementing the value and adding 1. The addition of the "1" is a result of making the *inverted* carry in (C_N) a LOW.

2. The twos complement of the B input is added to the A input. For example, let us subtract 4_{10} from 12_{10}. The answer, of course, should be 8_{10}.

```
A = 12₁₀ = 1100 ──────────────→ 1100
B =  4₁₀ = 0100 ── 2s comp. ──→ + 1100
                               1 1000 = 8₁₀
```

The result as displayed on the 4 output bits would be 1000 8_{10}. A=12, B=4, and A-B=8. Carry would occur and the carry LED would be lit, but in this case discarded, because it has no significance.

Do the following problem: 3 - 4 = ? Let A = 3, B = 4. What are the results?

```
                     internal operation
A = 3 = 0011 ─────────────────→ 0011
B = 4 = 0100 ── 2s comp. ──→ +1100
                              1111 = negative 1
```

The result is negative 1 (or minus 1), which is the correct answer for 3 - 4.

It may appear that there is no way of knowing whether a result is negative or positive; however, this is not the case.

Consider the number 1 in binary. On paper, we may write the number one as 1, as 01, or even 0000001 if we wish. To get a negative one, we take the twos complement, which in the case of 0000001 is 1111111. This representation of a negative number is not completely correct, since the "1" really has an infinite number of zeros in front of it. To be correct, 0000001 is really "(infinite number of zeros) 0000001," and the complement is "(infinite number of ones) 1111111."

It can be shown that, in a negative number, the leftmost bit at infinity is a 1 bit. Of course in the real world we can't go on writing down an infinite number of 1 bits to get to the leftmost bit, but we can define the leftmost bit in our arithmetic word as the "sign bit." Using this definition, the leftmost bit of our four bit arithmetic word is now the sign bit, and in our example the number 1111 becomes a negative number.

Note that, by adopting the leftmost bit in our four bit arithmetic word, our arithmetic is now restricted to 3 bits. The largest positive number that we can generate is 0111=7_{10}. The largest negative number that we can generate is 1000=8_{10}.

Multiply by 2

The instruction shown in Fig. 13 is designated an "A plus A" instruction, and has the effect of multiplying A by 2. This instruction may also be called a "shift left by 1 bit" instruction, since it shifts the number A to the left by one bit.

This instruction is useful for generating the squares of numbers and may be used as a part of a program to perform multiplication.

Conclusion

ALUs, such as the 74181 described in this article, are practical building blocks for the computer designer and do exist as important parts of computers available on the market today. These ALUs may stand alone as independent units, or they may be combined with other functions to form a device such as a microprocessor. Thus, the concepts described are applicable to large scale computers, independent ALUs and microprocessors. ■

Reference

[1] G. R. Allen, "Two Finger Arithmetic," *73 Magazine,* June, 1976, p. 84.

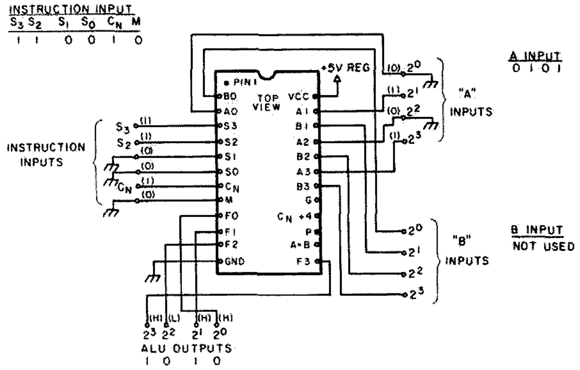

Fig. 13. Multiply by 2: A plus A (shift one bit left).

Loring C. White W1ODI
26 Boswell Rd.
Reading MA 01867

Satellite Orbit Predicting

--using a pocket calculator

How would you like to be able to press one button and get complete satellite orbit information without referring to various tables and graphs? Now that the new programmable pocket calculators are here, it is entirely feasible to do just that after a simple program entry which will give you all the information on your favorite satellite for the next month or so.

For the past several months I have been following the passes of the NOAA 3 and 4 satellites and recording the pictures coming from these modern day weather-predicting devices. Pictures have been obtained by FAX reproduction as well as oscilloscope display as described in a number of articles published in this magazine.[1]

A computer program has been written for the HP 25 pocket calculator, which is the new programmable calculator made by Hewlett Packard. The calculator is currently selling for around $180, and is an absolutely amazing little device which is fully programmable up to 49 steps. Programming is done in the same way a normal calculation is performed so that it is not necessary to study BASIC or FORTRAN 4 programming in order to program the device. Since there are "GO TO" and conditional steps available on the calculator, it is possible to have conditional branching in the program much the same as available in modern day computers.

In the program shown here it is possible to just punch in the date of the month, such as the number "3" for the third of April, and then by pressing the program "run" button, get the pass number, the equatorial crossing time for that date, and the degrees west that the satellite crosses the equator. What I generally do is assign a number to the first pass of the month, and then by consulting the *73* satellite table or ARRL nightly broadcasts for NOAA 4, get the first pass of the month info for making up[2] the program. It is necessary to know the time of a given pass of the satellite over your area and the degrees west longitude of this particular pass (which we will call pass #1 for reference). Once this info is found and entered into the program, it is only necessary to enter the date of the month and pass number in order to find out the time and equatorial crossing longitude. For example, in the program shown here, if we are interested in finding out the first pass of the day information for April 2, we just press the number two button and hit the run/start. We then see displayed the first orbit number (1), the day (2), and the time in hours (local 7.82). By then pressing the number one (orbit number just found) and the run/start button again, we see displayed the degrees longitude (242.9° W) equatorial crossing for that orbit.

After entering the program into the HP 25, also enter the satellite constants in the program memory shown as the "registers" 0-7. It then becomes obvious that the constants for any of the Oscar or NOAA satellites may be entered to give the desired orbit information.

A word about the register constants here: the first constant, R0, is the number of passes per day, in this case for NOAA 4. R1 is not used except in the program memory and can be ignored. R2 has the value 115, which is the time in minutes that the satellite takes to orbit the earth (in this case NOAA 4). R3 is 1440, the total number of minutes in one day. R4 is the day of the month to which is added the time, in days, of the first orbit. For example, the first orbit decided on is on the second of April, so we would add the number 2 to the time of the first orbit in days (not hours), which turns out to be .3256944 (7.82 hrs or 7:49 am); hence we come up with the number 2.3256944 days for the constant R4.

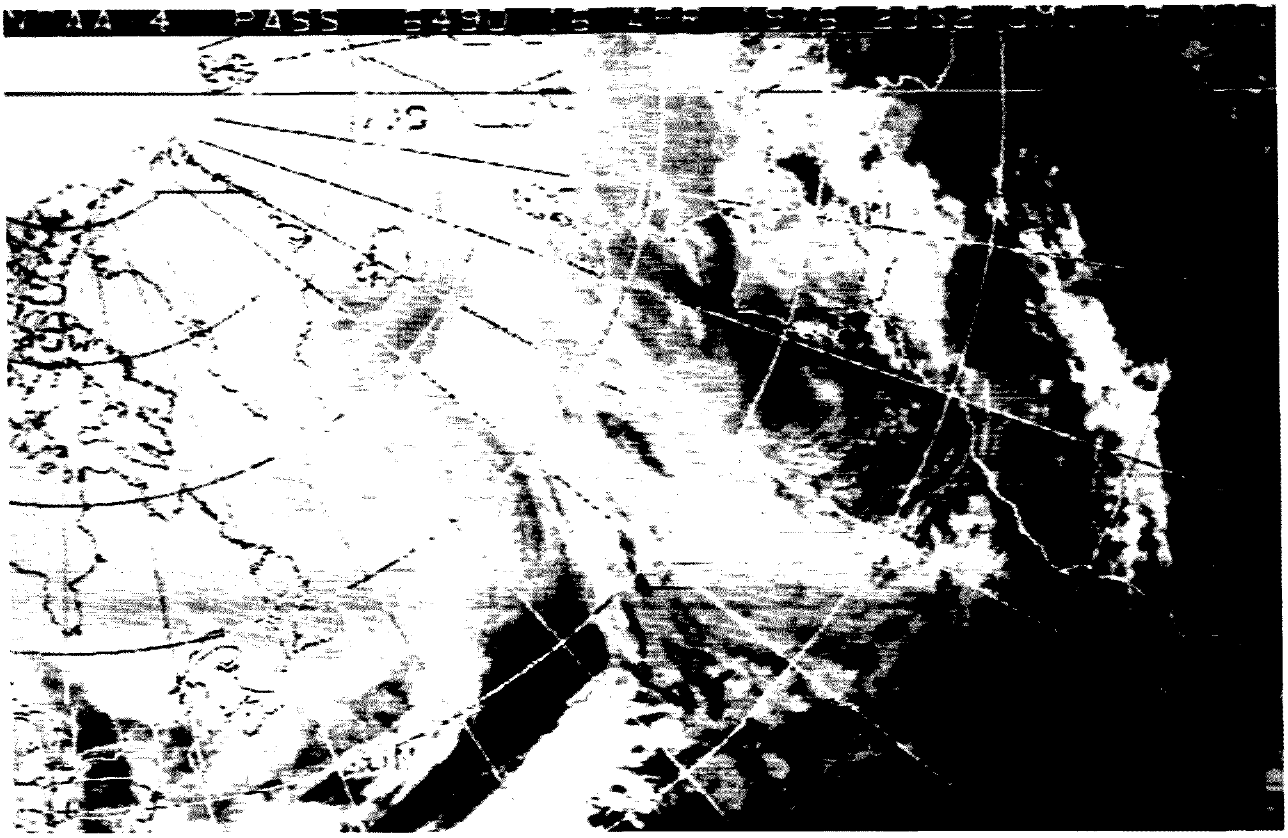

R5 is the degrees west longitude of the first orbit obtained as described above, and in this case is the number 242.9. R6 is the change in longitude for each pass of the particular satellite chosen and in this case for NOAA 4 is 28.75°. A more accurate number will give a more accurate predict orbit. R7 is 360 which turns out to be the familiar number of degrees in a circle!

As far as changes in the program from month to month, it is possible to be within one quarter of a degree or so after about one month's time, so I change the program about once per month to update the information.

Referring to line "02" in the program body: This particular entry is the only one that has to be changed in the program body if the date of the first orbit is changed when getting new orbit info. In this particular case, the number "2" refers to the day of the month for the first orbit programmed, which is the same number two discussed above in reference to constant R4.

The program here is particularly useful for tabulating a full month's orbits for a particular satellite. Since the passes for each day occur about the same time, it is only necessary to know about the first pass of each day, and the other passes can be found through simple calculation or by substituting the pass number in the second half of the program.

A similar program may also be developed for other programmable calculators such as the TI unit or more sophisticated computers. ■

References

[1] Taggart, *73 Magazine,* Aug. 1975; Sept. 1975; Oct. 1975; Sept. 1974.

[2] NOAA APT Coordinator, Calculating Satellite Crossing Times and Longitudes.

HP-25 Program Form

Title SATELLITE (NOAA 4) Page ___ of ___

Switch to PRGM mode, press [f] [PRGM] then key in the program

Display Line	Display Code	Key Entry	X	Y	Z	T	Comments
00							
01	31	↑					
02	02	2					
03	73	.					
04	41	-					
05	2400	RCL 0					
06	61	x					
07	2301	STO 1					
08	2401	RCL 1					
09	01	1					
10	51	+					
11	1401	f int					
12	1474	f pause					
13	2401	RCL 1					
14	1401	f int					
15	2402	RCL 2					
16	61	x					
17	2403	RCL 3					
18	71	÷					
19	2404	RCL 4					
20	51	+					
21	2301	STO 1					
22	2401	RCL 1					
23	1401	f int					
24	1474	f pause					
25	2401	RCL 1					
26	1501	gfrac					
27	02	2					
28	04	4					
29	61	x					
30	74	R/S					
31	31	↑					
32	01	1					
33	41	-					
34	2406	RCL 6					
35	61	x					
36	2405	RCL 5					
37	51	+					
38	2301	STO 1					
39	2401	RCL 1					
40	2407	RCL 7					
41	71	÷					
42	1401	f int					
43	2407	RCL 7					
44	61	x					
45	2401	RCL 1					
46	41	-					
47	32	CHS					
48							
49							

Registers	
R_0	12.5217391 #passes/day
R_1	
R_2	115 orbit time
R_3	1440 Min/day
R_4	2.32569444
R_5	242.9 First pass Long west
R_6	28.75
R_7	360

James F. Brown W6KYP
13865 Mira Montana
Del Mar CA 92014

The Death of Negative (IBM) Logic

--some fundamentals of logic design

During the past ten to fifteen years, conventions in logic design symbols have solidified to the point where one professional designer can finally communicate with a second with a minimum amount of confusion. This was a very painful growth period, but it's finally over. As an amateur logic designer, you have a choice of defining your own symbols and terms or going with the tide and using the industry standards. I strongly suggest you inflate your water wings and push out with the standards. The conventions are not very involved, and using them just takes a little practice. There are holes in some definitions, but by and large the system works.

I would like to make the newcomer's entry as simple as possible by going over the following terms and symbols:

- •Truth Tables
- •Positive/Negative Logic
- •Standard Symbols
- •Equivalent Symbols

I would also like to show how to name a function and why the choice of names is so important. The second section of this article, about positive and negative logic, should be of interest even to the experienced logic designer.

Truth Tables

The simplest version of this handy tool allows you to get a picture of what you want your logic design to do. The table consists of an input side and an output side. The input side contains a column for each of the input lines that you have to deal with; the output contains the results expected for every possible combination of inputs. For example: You need to light a lamp whenever one of your home sensors shows an open door or window or when you push a self-test button. You only want an entrance to light the lamp if the system has been enabled by a local switch.

Your inputs are:

- •Door #1 (D1)
- •Windown # (W1)
- •Self Test Switch (ST)
- •Enable Switch (ES)

Your output would be:

- •The Lamp

The truth table will contain five columns constructed as follows:

ES	ST	W1	D1	Lamp
0	0	0	0	0
0	0	0	1	0
0	0	1	0	0
0	0	1	1	0
0	1	0	0	1
0	1	0	1	1
0	1	1	0	1
0	1	1	1	1
1	0	0	0	0
1	0	0	1	1
1	0	1	0	1
1	0	1	1	1
1	1	0	0	1
1	1	0	1	1
1	1	1	0	1
1	1	1	1	1

The ones and zeros in the input field are simply the

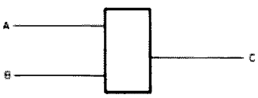

Fig. 1.

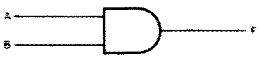

A	B	F
0	0	0
0	1	0
1	0	0
1	1	1

Fig. 2. AND.

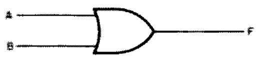

A	B	F
0	0	0
0	1	1
1	0	1
1	1	1

Fig. 3. OR.

A	F
0	1
1	0

Fig. 4. Inverter.

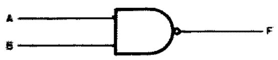

A	B	F
0	0	1
0	1	1
1	0	1
1	1	0

Fig. 5. NAND.

A	B	F
0	0	1
0	1	0
1	0	0
1	1	0

Fig. 6. NOR.

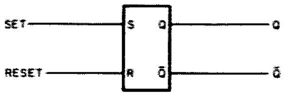

SR	Q
00	No change from last state
01	0
10	1
11	0 Undefined

Fig. 7. R/S.

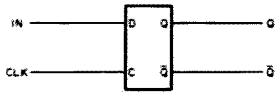

D	C	Q
0	0	No change
0	1	0
1	0	No change
1	1	1

Fig. 8. D type.

binary progression of four bits. The binary progression makes sure that no combination is left out of the table. The output column is generated by analyzing your requirements for each possible combination of inputs. Tables larger than this can be used. I have a different version for my home grown computer that has 60 outputs with better than 100 inputs, but as you can see, they become large very quickly.

Positive and Negative Logic

Suppose that two logic designers, one on Earth and the other on Mars, are asked to analyze a logic module and to produce a truth table. Each designer is given a voltmeter and an operating module. Both modules are exactly the same and both operate exactly the same.

The first thing the two designers are asked to do is to construct a *voltage* truth table. The modules both look like Fig. 1.

The two *voltage* truth tables are:

Earth

A	B	C
0 V	0 V	0 V
0 V	+5 V	+5 V
+5 V	0 V	+5 V
+5 V	+5 V	+5 V

Mars

A	B	C
0 V	0 V	0 V
0 V	+5 V	±5 V
±5 V	0 V	+5 V
+5 V	+5 V	+5 V

Both tables are exactly the same, and both show that when a +5 V signal is applied to either A or B, the output on C will be +5 V. This appears to be an OR function, right? Not necessarily.

Both designers are then asked to produce a *logic* truth table from the *voltage* truth table shown above. The Earth designer has been taught that the higher voltage is represented by a TRUE shown as a "1" in his logic table. The lower voltage is shown by a FALSE or a "0" in the table.

The Martian designer has been taught just the opposite; that is, a high is a FALSE or "0", and a low is a TRUE or "1".

The substitution of 1s for +5 V and 0s for 0 V by the Earthling, and 0s for +5 V and 1s for 0 V by the Martian, produces the following different logic truth tables:

Earth

A	B	C
0	0	0
0	1	1
1	0	1
1	1	1

Mars

A	B	C
1	1	1
1	0	0
0	1	0
0	0	0

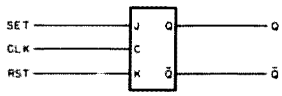

K	J	C	Q
0	0	0	0
0	0	1	0
0	1	0	0
0	1	1	1
1	0	0	0
1	0	1	0
1	1	0	0
1	1	1	Toggle

Fig. 9. JK.

The Earthman thinks he has an OR, the Martian thinks he has an AND, but both have the same logic module.

The Earthman is working in what we call POSITIVE logic, the Martian in NEGATIVE logic. If the two were to continue their analysis of all module types available, they would find that AND = OR and NAND = NOR, depending on your point of view.

Negative logic was used widely right here on Earth in many places (IBM for one), but luckily the practice is going away. There may be good reasons to use it in certain cases, but I would think that they would have to be very good reasons to put up with the confusion it causes. So much for the world of negative logic; from now on everything will be referenced positively. The higher of the two logic levels will be a 1 or TRUE, the lower 0 or FALSE.

Standard Symbols

The standard symbols for the most common logic elements are shown in Figs. 2-4. From these the elements in Figs. 5 and 6 were generated.

As you can see, the difference between a NAND and an AND is simply that the output is inverted (as signified by the small circle on the output).

Flip flops are a bit more difficult to describe. This family consists of Set/Reset (R/S), D type. and JK (Figs. 7-9). Most flip flops have several more inputs than those shown; for an exact definition of the operation of each, you should get a Texas Instruments Manual.

Equivalent Gate Symbols

Since it is possible to use a NAND to perform an OR function and a NOR to perform an AND function, logic designers came up with specialized symbols to show when gates were used in this manner. For example, if you have to OR three lines whose active state is low, you would use a three input NAND. The logic could be drawn using a standard NAND symbol, as shown in Fig. 10, but Fig. 11 would more clearly show the ORing function. Exactly the same logic gate is used in either case, but it is now apparent that an ORing is taking place by the shape of the symbol.

The gate symbols shown in Figs. 12-15 are all equivalent. The important thing about these symbols is the use of

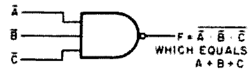

Fig. 10.

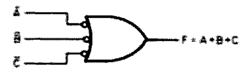

Fig. 11.

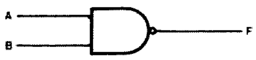

Fig. 12. ANDing function using a NAND.

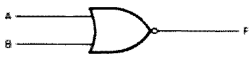

Fig. 13. ORing function using a NOR.

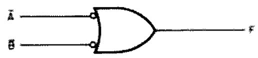

Fig. 14. ORing function using a NAND.

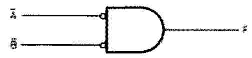

Fig. 15. ANDing function using a NOR.

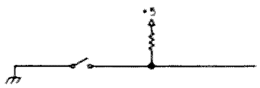

Fig. 16.

the inverter symbol on the input. After you have completed a logic design using these four symbols, if you have anything other than negated inputs connected to negated outputs, you have an error. Either your incoming term is misnamed, or it needs to be inverted. It is quite possible to do all your logic design without resorting to the equivalent symbols, but the result will be less readable.

Term Names

When picking names for the terms in your design, be sure to choose the active function. For example, the circuit shown in Fig. 16 is widely used to generate binary logic levels from a switch. If closing the switch pulls the line to a logic zero and clears the system, it should be named $\overline{\text{CLEAR}}$ (spoken, "CLEAR NOT"), rather than "DON'T CLEAR." Always think of the action to be performed, name it, and *then* add the negation if necessary. Don't attempt to find a name for the true condition first. ■

Allan Joffe W3KBM
1005 Twining Road
Dresher PA 19025

... And on the Other Side

--binary and octalization of decimals

In a previous effort, I described a simple method of taking a whole number written in base 10 (your ordinary everyday numbering system) and producing its equivalent in binary (or base 2).[1] You could also turn it into its octal equivalent (base 8), if that's what you desired. The beauty of the method was that the entire math depended upon your ability to divide by the number 2 or the number 8.

The logical question is, "What do we do if there is a fractional part to the number?" Putting it another way, "What do we do with numbers to the right of the decimal point?"

Taking a peek in the rearview mirror, the temptation is to ask, "Why bother?" If the rearview mirror shows an interest in computers, the answer is, "Let's bother!" Systems that you and I might hope to afford generally eat binary and octal, so the least we can do is appreciate the "food" shoved down their expensive electrical gizzards.

We know that in the decimal system each digit to the right of the decimal point has a value. The progression is tenths, hundredths, thousandths, and so on. Thus 0.125 is really the sum of one tenth, two hundredths and five thousandths.

With muted thanks to Miss Venables, who taught me all these good things, let's climb out of the sandbox and examine the same idea in the binary system. The values to the right of the decimal point have values of one half, one fourth, one eighth, one sixteenth, and so on. Octal is a bit rougher, as base 8 progresses rapidly. The values are one eighth, one sixty-fourth, one five hundred twelfth, etc.

With these basics in mind, we can skip down the primrose path of conversion from decimal to either octal or binary by extending our grasp on basic math to the extent that we can skillfully multiply by two or by eight as the case may be.

Suppose we consider the delightful decimal 0.53 and wish to convert it to binary. We are really asking the following successive questions: "How many one halves does this number contain? How many quarters? How many eighths? How many sixteenths?" And so it goes, until we get to the final binary equivalent. To convert it to octal we would ask the same questions, but would substitute the octal place values. Rather than go through this, though, we merely start multiplying by two or by eight and look for the signposts that give us the proper numbers to put down in our conversion. For the binary conversion our numbers will be limited to zero and one, while for octal the numbers will range from zero to seven.

The Method

We will assume that we want to take the decimal base ten value 0.53 and convert it to the equivalent binary notation. Please make a firm note that there is a zero to the left of the decimal point. When you start flirting with computerese or definitive math, zero is a powerful animal that can really hang you up when ignored or misused. The method is simplicity itself:

- Multiply 0.53 by 2 ... 1.06.
- Any figure to the left of the decimal point, including zero, becomes our first binary digit in the desired answer ... 0.1.
- We now multiply the decimal portion of the first multiplication again by two (0.06x2) ... 0.12. Thus the next digit in the binary answer is a zero ... 0.10.
- We merely continue this process until we are satisfied that our conversion is relatively complete. In the case of 0.53 (base 10) to binary, carrying this process to seven places would give us an answer in binary of 0.1000011. It is definitely interesting to take the time to see what the absolute value of the binary answer is in order to see how successful the conversion has been. The binary answer is the arithmetic sum of the values of each binary place, i.e., the sum of one half (0.500), plus no fourths, plus no eighths, plus no sixteenths, plus no thirty-seconds, plus one sixty-fourth, plus one one hundred twenty-eighth.

Those numerical specifications look like this:

0.500 (one half)
0.015 (one sixty-fourth)
0.007 (one one hundred twenty-eighth)
———
0.522

Note that in the conversion process there is a slight discrepancy in the third decimal place. If we had taken the conversion of 0.53 base 10 to an additional binary place we would have gotten even closer, which illustrates that eight places is not overkill when converting a decimal base 10 form to binary.

The octal conversion process is identical in methodology but we now use the number 8 as our multiplier. Ergo:

0.53 x 8 = 4.24 . . . 0.4
0.24 x 8 = 1.92 . . . 0.41
0.92 x 8 = 7.36 . . . 0.417
0.36 x 8 = 2.88 . . . 0.4172

Thus the octal conversion held to four steps (for simplicity) is 0.4172.

On a one time basis to understand the point, it is worthwhile to wade through the place values of this conversion to see how close the octal conversion comes to the original decimal (0.53) that we started out with.

0.4172 in base 8 is really the sum of:

4 x 1/8	or	0.5000
1 x 1/64	or	0.0150
7 x 1/512	or	0.0133
2 x 1/4096	or	0.0004
		0.5287

Note that the difference between the binary expansion and the octal expansion is, as mentioned, due to the fact that binary uses only ones or zeros, while octal uses all numbers from zero to seven. Thus, when you examine the binary result to see how close your conversion is, the process is simpler than the octal case where each place value has to be multiplied by the number in the octal answer. It is also interesting to note that the octal conversion in this case was a more accurate conversion in four steps than the binary conversion was in a larger number of steps. If we had taken the binary conversion one more step (for a total of 8), our binary conversion would have gone from 0.522 to 0.525, which is still not quite as good as the octal conversion of 0.5287.

Without quibbling over the merits of binary versus octal final accuracy, you just might now be nourishing the faint suspicion that "the computer" may have some trouble in "exactly" representing some numbers fed into its inner workings. This is an accurate conclusion on your part. Putting it another way, the math through the computer may well not be "on the money" — just damned close. ■

[1] "What's That in Binary?", *73*, March, 1976, pp. 92-93.

Place Values to the Right of Decimal Point

	1	2	3	4	5
Base 10	0.1	0.01	0.001	0.0001	0.00001
Base 2 (Binary)	0.5 (½)	0.25 (¼)	0.125 (1/8)	0.0625 (1/16)	0.0312 (1/32)
Base 8 (Octal)	0.125 (1/8)	0.0156 (1/64)	0.0019 (1/512)	0.0002 (1/4096)	0.00003 (1/32,768)

Bernd Grossman DL2SX/ZS6GG
Offenbach/M
Rumpenheim
Rohr Str 8
West Germany

John S. Reid ZS6JR
P.O. Box 7032
Dinwiddie 1405
Transvaal
Republic of South Africa

Build the Safari RTTY Terminal

--an active filter modem from Africa

After various experiments with coils and capacitors, it was decided to try active filters for decoding. The main problems in decoding RTTY are the high amount of noise on the signal, the QSB, and a very often found frequency instability of the received RTTY signals. To bring all this under one hat together with the demand of low cost, a lot of compromises had to be made.

Fig. 1 shows the block diagram of the RTTY encoder-decoder.

To become independent of QSB, a limiter had to be placed at the input. A low pass and a high pass filter reduce the noise above and below the wanted frequencies (2125 Hz and 2295 Hz). After these stages common to all frequencies, the filter stage follows. The filtering is done in a somewhat unusual way. The signal (a square wave) is fed through a notch filter designed to eliminate the basic frequency of the square wave.

Having passed this, the square wave looks like the one in Fig. 2.

This signal, together with the square wave as it looked before the notch filter, then enters an op amplifier used as a differential amplifier.

If the input signals to this op amplifier are equal (applies for all frequencies except the notch frequency), there is no output. For the notch frequency there is a sine wave output. This sine wave is rectified and detected in an op amplifier, wired as a Schmitt trigger. In order to observe a received signal, add a pair of LEDs including transistor drivers. The Schmitt trigger is followed by the pre-driver and driver stages for the teleprinter magnet.

The encoder basically consists of an unijunction oscillator. This of course does not generate a square wave and is therefore followed by a "flip flop" which generates a square wave of exactly 50% mark space ratio. Since a flip flop divides by two, the unijunction oscillator has to run at twice the frequency.

To change the frequencies (mark space) a transistor 2N2904 is used to change the value of the charge resistor for the unijunction oscillator. The BC108 in front of the 2N2904 is to change the switching for "upside down" transmission, in the SSB mode. The square wave coming out of the flip flop is fed into the decoder input. A sine wave signal to modulate any SSB or AM transmitter is obtained after the combining amplifier.

The frequency of the notch filter is determined by resistor R and capacitor C and is worked out according to the formula below (see Fig. 3):

$$f = \frac{1}{2\pi RC} \qquad \begin{array}{l} f \text{ in Hertz} \\ R \text{ in Ohms} \\ C \text{ in farads} \end{array}$$

The circuit of the complete encoder-decoder is shown in Fig. 4.

Construction

A print of the PC board is shown in Fig. 5 with wire links shown. The first step is to place the wire link between pins 4 of IC4 and IC5, as this is covered by the IC holders. Assembly from

Reprinted from *Radio ZS*, Volume 29, Number 3, pp. 10-13.

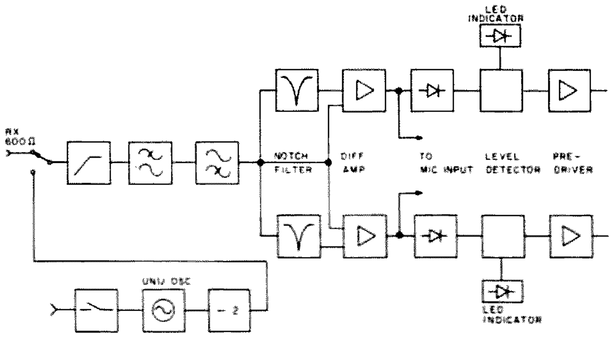

Fig. 1. Block diagram of 170 Hz shift RTTY modem.

Fig. 2. Square wave after having passed through the notch filter.

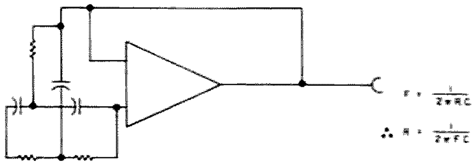

Fig. 3. Basic notch filter.

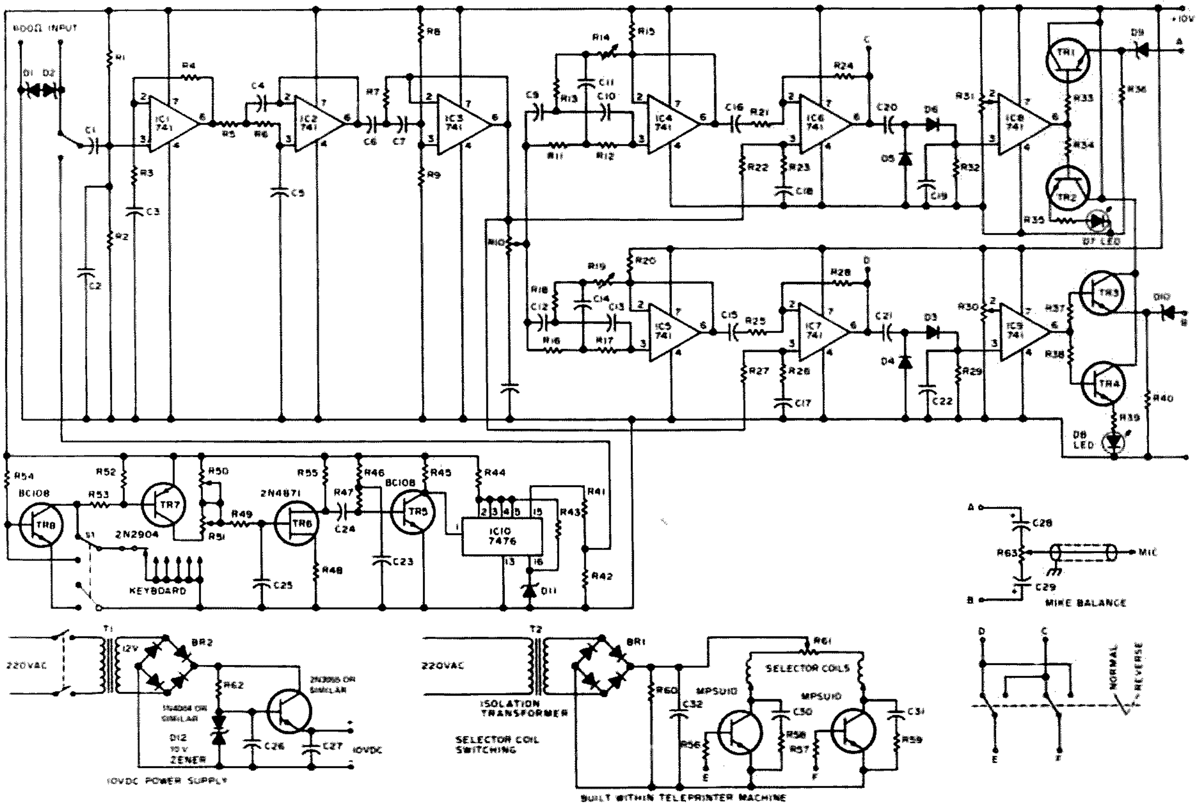

Fig. 4. Encoder-decoder circuit diagram, teleprinter switching, 10 volt supply, and other controls on the terminal unit.

then on is straightforward. After all the components have been installed, check the board but do not plug in the ICs. Connect the unit to +10 V and check that the voltage on pin 16 of IC10 is +5 V. If not, change R44 to achieve this value.

Encoder

With an oscilloscope connected to the collector of TR5, check that the unijunction is triggering. Then insert the IC 7476 into IC10 socket and check for a square wave at the encoder output socket. Connect a counter to this same position and adjust the two 5k trimpots so that, with the two leads which go to the keyer circuit shorted, the output is at 2295 Hz and with them disconnected, the output is at 2125 Hz.

Decoder

Insert IC1, and with audio signal generator connected to the input terminal, check with the oscilloscope on pin 6 that the output is a square wave and remains at the same level for all input voltages. Insert IC2 and IC3; check with an oscilloscope connected to the center of the potentiometer connected to pin 6 of IC3. Tune the audio generator across the band and see that the output increases from below 2125 Hz to above 2295 Hz. Insert IC4, IC5, IC6 and IC7. Connect the scope to pin C of IC6 and see that the output increases sharply at 2125 Hz. This resonant point is governed by the two 8.2k resistors connected to pin 3 of IC4; it may be necessary to pad these resistors to bring the peak exactly onto 2125 Hz, remembering that the lower the resistors, the higher the frequency.

Now do the same at IC7, at point **D**, but for a frequency of 2295 Hz. Remove the audio generator. Insert

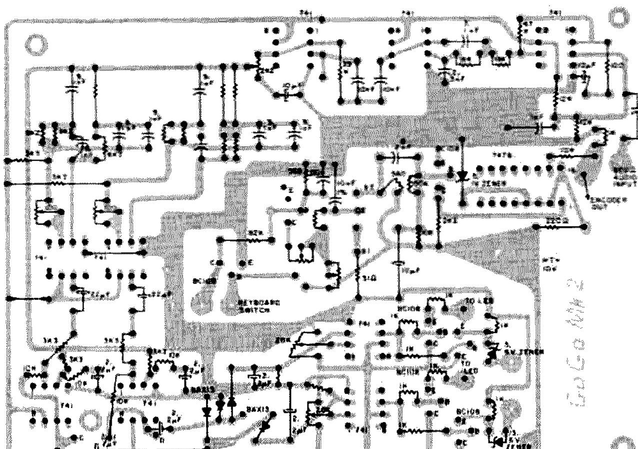

*Fig. 5. Encoder-decoder PC board and component layout. *Jumper emitter of TR7 to positive rail.*

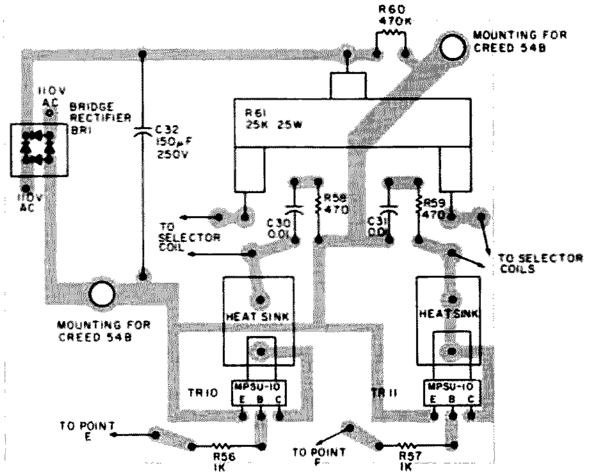

Fig. 6. Teleprinter switching PC board and component layout.

IC8, adjust the 20k potentiometer R31 connected to pin 2 of IC8 until the LED lights up, then back off the potentiometer slightly. Reconnect the audio generator and check that the LED lights up to 2125 Hz ± 45 Hz.

Repeat the above for IC9 and a frequency of 2295 Hz. If the bandwidth at the resonant frequency is too broad, adjust the R14 and R19, on IC4 and IC5, to narrow the bandwidth. These are normally set at about 5 Ohms. Be careful that the setting does not result in ringing in the notch filter.

Place a voltmeter between each output and earth and check that the voltages rise to +3.8 volts whenever the audio generator is on the correct frequency.

Now connect the output of the encoder, when it is switched to 2125 Hz, to the input of the decoder. Connect the oscilloscope to point C and adjust R12 so that the output is a sine wave. Switch the encoder to 2295 Hz and likewise check the output at point D. Now connect the oscilloscope to the mike input lead, and with the balance potentiometer, adjust both outputs to be the same while switching the encoder between 2125 and 2295 Hz.

The parts layout for the encoder-decoder is shown in Fig. 5 and the parts layout for the teleprinter switching is shown in Fig. 6.

The teleprinter layout shown in Fig. 7 was designed to fit into a Creed 54B teleprinter, but may fit into your teleprinter. The reason a separate board was used was to keep the 150 volt dc line well away from the main modem unit. It is advisable to use an isolation transformer if the unit is operated on 110 volts ac. ■

Parts List

R1-R2	12k
R3	100 Ohms
R4	47k Ohm
R5-R6	18k
R7	3.9k
R8-R9	24k
R10	2.2k
R11-R12	8.2k 1%
R13	4.1k (two 8.2k, 1% in parallel)
R14	100 Ohm skeleton preset potentiometer
R15	3.3k
R16-R17	7.6k 1% (8.2k + 68k 1% in parallel)
R18	3.8k 1% (3.9k + 150k 1% in parallel)
R19	100 Ohm skeleton preset potentiometer
R20-R22	3.3k
R23-R24	10k
R25	3.3k
R26	10k
R27	3.3k
R28	10k
R29	33k
R30-R31	20k skeleton preset potentiometer
R32	33k
R33-R40	1k
R41	10k
R42	1k
R43	100 Ohms
R44	220 Ohms
R45	2.2k
R46	10k
R47	150k
R48	51 Ohms
R49	15k
R50-R51	5k miniature 22 turn trimpot Spectrol 51-3-11
R52	56k
R53	82k
R54	33k
R55	560 Ohms
R56-R57	1k
R58-R59	470 Ohm
R60	470k 1 Watt 10%
R61	25k 25 Watt ohmite adjustable
R62	470 Ohm
R63	2.2k preset potentiometer

T1	Small 220 V/110 V – 12 volt transformer
T2	220 V/110 V – 110 volt isolator transformer
C1	10 nF
C2	1 nF
C3	10 mF 25 volt electrolytic
C4	7.1 nF
C5-C6	2.5 nF
C7	10 nF
C8	10 mF 25 V electrolytic
C9-C10	9.1 nF 1% polycarbonate
C11	18.2 nF 1% (two 9.1 nF in parallel)
C12-C13	9.1 nF 1% polycarbonate
C14	18.2 nF 1% polycarbonate
C15-C22	2.2 mF 25 V electrolytic
C23	10 mF 25 V electrolytic
C24	8.2 nF
C25	100 nF 1% polycarbonate
C26	250 mF 64 volt electrolytic
C27	2000 mF 25 volt electrolytic
C28-C29	10 mF 12 volt electrolytic
C30-C31	0.01 mF 150 V dc
C32	150 mF 250 V electrolytic
D1-D2	3.3 volt zener diodes
D3-D6	BAX13 or any small signal silicon diode
D7-D8	LED, red, small for mounting on front panel
D9-D10	3.8 volt zener diodes
D11	5.1 volt zener
D12	11 volt zener
IC1-IC9	MC1741C (Pi suffix)
IC10	7476 flip flop
TR1-TR5, TR8	BC108 or equivalent NPN silicon
TR6	2N4871 unijunction
TR7	2N2904 PNP silicon
TR9	2N3055 or equivalent
TR10-TR11	Motorola MPSU-10 or equivalent
BR1-BR2	Small 2 Amp rectifier bridge

All resistors 1/8 Watt,
5% except where shown.

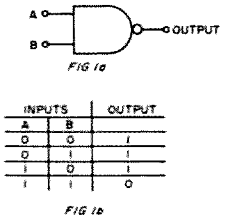

Fig. 1. The two-input NAND gate. 1(a) is the schematic, (b) shows the truth table. The pin layout of the SN7400 is in 1(c).

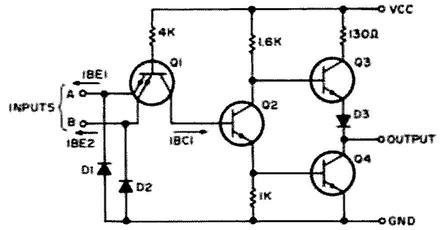

Fig. 2. The circuitry for one of the gates in the 7400 quad two-input NAND gate.

Never Underestimate the NAND

--introducing the 7400 quad NAND gate

Robert Henson WBØJHS
1016 Polk Blvd.
Des Moines IA 50311

Even a ham who considers himself somewhat knowledgeable on digital logic can be confused when he glances at a new logic circuit for the first time. Though the logic elements involved in any particular circuit are seemingly simple to understand, their interconnection with other elements and devices often tends to make the circuit as a whole confusing to the point of incomprehensibility, especially to the inexperienced. Circuit analysis is also further complicated when logic devices are utilized to perform functions other than that for which they were primarily intended. Unfortunately, these sources of confusion often appear formidable enough to discourage some of the less experienced hobbyists from experimenting with digital logic circuits.

This article will attempt to dispel some of the mystery about the many uses of one of the most basic logic elements, the two-input NAND gate. In addition to explaining its primary function, it will be shown how it may be connected to perform the functions of an inverter, a set-reset flip flop, a switch debouncer, a pulse shaper, a square wave oscillator and even a crystal oscillator. In spite of the rather ominous forewarning that this article is about a *digital logic* element in an *integrated circuit* package, it will be shown that these applications are extremely simple, making this the ideal device for learning the basics about logic circuits.

Basics

For two important reasons, the NAND gates described in this article will all be of the TTL (transistor-transistor logic) family. First of all, TTL is by far the most commonly used logic in current ham projects. Second, it is the least expensive and the most readily available from surplus dealers. The current price of

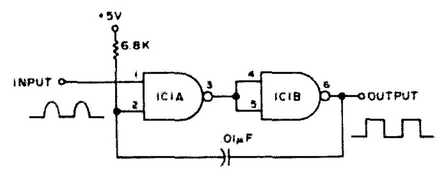

Fig. 3. An input conditioning circuit utilizing two sections of the quad two-input NAND gate.

the 7400 quad two-input NAND gate is a whopping sixteen cents.

Fig. 1(a) shows the common schematic representation of the two-input NAND gate. Fig. 1(b) is the truth table that shows the output of the NAND gate for all possible combinations of inputs. The truth table is the key to understanding the NAND gate, and will be referred to repeatedly in subsequent discussions and applications of this device.

For TTL logic, each "0" in the truth table represents a voltage of 0.8 volts or less. Each "1" represents a voltage of greater than 2.0 volts but less than the NAND gate supply voltage of 5.0 volts.

Fig. 1(c) shows the pin diagram for the SN7400 quad two-input NAND gate. As the word quad implies, there are four two-input gates contained in one dual in-line packaged IC. As was previously mentioned, a regulated five volt power supply is necessary to power the IC. Positive is connected to pin 14. Negative is connected to pin 7.

Internal Circuitry

At this point let's digress for just a moment and take a peek into the innards of the IC. If transistor circuitry isn't your bag, simply skip this section of the article. The following discussion of the internal circuitry is not essential in applying the device, but is presented for those who desire further insight into how the gate actually works. For those who are indifferent about this aspect of the IC, the NAND gate can be treated as a "black box" device.

Fig. 2 shows the transistor circuitry that actually comprises each section of the SN7400 two-input NAND gate. The inputs are actually the two emitter leads of Q1, a double emitter transistor. The output is connected to the collector of Q4.

First, let's consider the case where both inputs are tied to a "1", or a voltage of between 2.0 and 5.0 volts. This will correspond to the bottom line of the truth table listed in Fig. 1(b). The base-collector junction of Q1 will be forward biased for this particular set of inputs, allowing I_{BC1} to flow. This current will be of sufficient magnitude to saturate transistor Q2. The resulting collector current of Q2 will produce a voltage drop across the 1.6k Ohm collector resistor of sufficient magnitude to cause the collector voltage of Q2 to decrease to the point where transistor Q3 is cut off, or effectively open circuited. The rise in potential at the base of transistor Q4 caused by Q2's increased emitter current across the 1k Ohm emitter resistor will be sufficient to saturate Q4, causing its collector voltage to drop to near ground potential, or a logic "0". This is exactly as stated by the truth table of Fig. 1(b).

Now suppose that input A is tied to ground or to a voltage source of 0.8 volts or less. This would correspond to the second line of the truth table of Fig. 1(b). Now a current I_{BE1} will flow from the emitter of Q1 to the grounded input A. In this case, I_{BC1} will be zero, causing Q2 to be cut off or effectively open circuited. No current will flow in either the emitter or collector circuit of Q2. Therefore, Q4 will not be biased on as in the previous case, and will in effect be cut off, causing its collector-emitter junction to appear to be open circuited. On the other hand, the collector of Q2 will be approximately at the potential of V_{CC}. This will cause transistor Q3 to saturate, presenting a logic "1" voltage at the output terminal that is equal to the supply voltage, V_{CC}, minus the voltage drop across the base-emitter junction of Q3 and the diode, D3. This output voltage is typically about 3.3 volts.

Note that the conditions described in the preceding paragraph apply to the cases where either or both input terminals are connected to a logic "0" as previously defined. This corresponds to the top three lines of the truth table.

Diodes D1 and D2 are included to help protect the gate should the inputs be accidentally connected to a negative voltage.

One important TTL design rule should be evident at this point. An open circuited input of a TTL gate corresponds to a logic "1" input rather than a "0" input. Or in other words, to input a logic "0" you must tie the input to ground or to a voltage of less than 0.8 volts so that transistor Q1's base-emitter junction will conduct. To input a logic "1" you may either tie the input to a voltage of greater than 2.0 volts or simply leave that input open circuited.

Gating

Now that we've taken a look at what's inside the NAND gate, let's discuss some of its many uses. First of all, as its name implies, the NAND gate's primary function is that of gating. In a logic circuit, the NAND gate will provide a unique output response of logic "0" if, and only if, both inputs are simultaneously at a logic "1". A perusal of any of the recent issues of *73 Magazine* will uncover digital logic circuits using the NAND gate in this fashion.

Inverter

An inverter is a logic element that provides a "1" output for a "0" input and a "0" output for a "1" input. The two-input NAND gate can be easily converted to perform the functions of an inverter by simply tying the two inputs together. Now, only the top and bottom lines of the truth table apply. The output will always be the inverse of the input.

Like the gating function, the use of the NAND gate as an inverter is very common. The easiest way to gain further insight into the reasons for its use in this fashion is to study current digital logic projects in the ham magazines.

Pulse Shaper

A fast switching waveform is necessary to reliably trigger

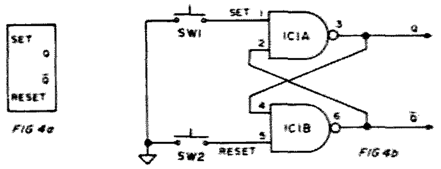

Fig. 4. In (a) is the common schematic for the set-reset flip flop; (b) shows how two sections of the SN7400 can be connected to form a set-reset flip flop.

Fig. 5. Switch "bounce."

TTL flip flops and counters. Slower switching waveforms such as low frequency sine waves will often result in erratic operation. The circuit of Fig. 3 shows how two sections of a 7400 NAND gate can be connected to form a waveform conditioning circuit, providing a TTL compatible square wave output from a slower switching waveform presented at the input.

As was discussed in the section on internal circuitry, the NAND gates are saturated logic elements. In other words, the output is either "on" (at a voltage of approximately 3.3 volts) or "off" (at a voltage of approximately 0.4 volts). The circuitry tends to avoid any in-between output states.

This characteristic is utilized in the circuit of Fig. 3. As the waveform at the input slowly changes from a "0" to a "1" logic level, and vice versa, the abrupt switching characteristic of the NAND gates transforms this input waveform to a square wave output at terminal 6. The inclusion of the .01 uF capacitor from pin 6 of section IC1B to pin 2 of section IC1A provides a transient feedback that further enhances the switching speed of the trailing edge of each pulse.

The circuit of Fig. 3 is often found in digital circuits that contain transistor or unijunction transistor oscillators that do not have TTL compatible outputs. The circuit is also often used to condition 60 Hz half-wave rectified sine waves for use in digital clock circuits.

Set-Reset Flip Flop

A set-reset flip flop is a logic element with two outputs commonly labelled Q and $\bar{Q}$. $\bar{Q}$ is said to be the inverse of Q, since $\bar{Q}$ is always a "1" when Q is a "0", and always a "0" when Q is a "1". A logic "0" applied to the set input of the set-reset flip flop will cause the $\bar{Q}$ output to go to a logic "1" and the $\bar{Q}$ output to go to a logic "0". The flip flop will then remain in this state when the "0" at the set input is removed. In this respect, the flip flop may be thought of as a memory device. A "0" applied to the reset input will cause $\bar{Q}$ to switch back to a logic "1", and Q to switch back to a logic "0".

Fig. 4 shows the common logic symbol for a set-reset flip flop, and how NAND gates can be connected to form this device. In this diagram, both SW1 and SW2 are normally open switches or contacts. If SW1 is momentarily closed, grounding pin 1 of IC1A, pin 3 will switch to a logic "1" as dictated by the truth table of Fig. 1(b). This logic "1" is then present at pin 4 of IC1B. Since pin 5 of IC1B is open circuited and therefore also at a logic "1" level, the output of IC1B switches to a logic "0". Now, when SW1 returns to its normally open position, pin 1 of IC1A returns to a logic "1" voltage. However, pin 2, being connected to pin 6 of IC1B, remains at a logic "0". Therefore the output of IC1A remains at a logic "1" state and the output of IC1B remains at a logic "0" state. This is the "set" condition of the flip flop.

Now, if SW2 is momentarily closed, a "0" is applied to pin 5 of IC1B, changing its output to a logic "1". Both inputs of IC1A are then at a logic "1" causing its output to switch to a logic "0". As before, both IC1A and IC1B retain these output states when SW2 returns to its normally open position. This is the "reset" condition of the flip flop.

Even though there are TTL ICs specifically designed as flip flops, it is not at all uncommon to see the 7400 quad NAND gate being used to implement the set-reset flip flop function. In many cases one half of the 7400 IC will be used as a flip flop while the other two NAND gates will be used as gates, inverters, pulse shapers, etc.

Switch Debouncer

We have already taken a look at one of the peculiarities of interfacing TTL logic with the outside world, namely the requirement of waveform conditioning. Another interfacing difficulty is depicted in Fig. 5. Mechanical inputs such as switch and relay contacts are relatively "noisy." As shown in the illustration, when a mechanical switch or relay contact closes, the contact actually bounces many times before coming to rest in the closed position. These bounces are very fast, being only fractions of a microsecond in duration, and therefore do not affect electromechanical or slower speed electronic circuits. However, to the high speed TTL logic, these contact bounces are a bona fide string of individual input pulses and can cause erratic or unreliable circuit operation. For instance, suppose that a counter circuit comprised of TTL logic elements was constructed to count the number of times the switch contact in Fig. 5 was closed. As can be seen from the waveform produced by this noisy switch contact, the counter would actually count the several contact closures that result as the contact bounces or "chatters" before coming to rest in the closed position. Obviously some sort of interface is necessary to prevent this type of misoperation.

The circuit of Fig. 6 shows how two NAND gates can be connected to form a bounceless switch or interfacing circuit. SW1 can be any SPDT switch or relay contact. As can easily be seen by comparison to Fig. 4, the bounceless switch is no more than a set-reset flip flop. Due to the memory action of the flip flop the circuit will always switch on the initial contact closure and will therefore be immune to the subsequent contact bounces. As can be seen from the illustration, the NAND gates will provide one clean pulse for each contact closure cycle even though contact bounce actually occurs at both the normally open and normally closed switching positions.

Square Wave Oscillators

The NAND gate can also be connected as a square wave generator as shown in Fig. 7. The particular component values of R_t and C_t shown in this diagram will allow oscillation in the 1 kHz range. To explain the operation of this astable multivibrator circuit, let's first assume that we are starting at the instant that pin 6 of IC1B has switched to a logic "0". Since pin 3 of IC1A is at a logic "1" at this same instant, C_t will begin charging through resistor R_t. When the capacitor has charged to a voltage sufficient

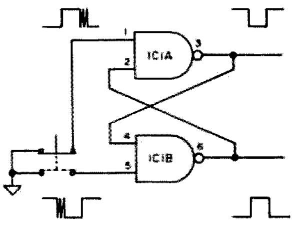

Fig. 6. Two sections of the SN7400 connected to form a bounceless switch.

to provide a logic "1" at pins 1 and 2 of IC1A, the two NAND gates abruptly switch logic output states. Then the logic "1" at pin 6 of IC1B and the "0" at pin 3 of IC1A cause C_t to begin discharging through R_t. When C_t has discharged to a "0" logic level, the gates abruptly change states again. Thus the oscillations continue at a rate dependent on the RC time constant of R_t and C_t.

Provisions for keying the oscillator can be made by disconnecting pin 1 from pin 2 of IC1A. Now, grounding or application of a "0" at pin 1 of IC1A will prevent oscillation, since according to the truth table the output of IC1A must always remain at a "1" as long as one input is at a "0". A logic "1" or an open circuit at pin 1 would allow the oscillator to run.

Two other connections of NAND gates to form square wave oscillators are shown in Fig. 8. Like the oscillator just described, these oscillators also rely on the charge-discharge cycle of capacitors to provide oscillation. In all these oscillators the frequency ranges may be varied by the selection of the RC components. The higher the RC product, the lower the frequency range that will result.

Oscillators of the type shown in Figs. 7 and 8 are often found in circuits that require a TTL compatible clock. Though these oscillator circuits are reliable, some frequency drift can be expected in normal operation.

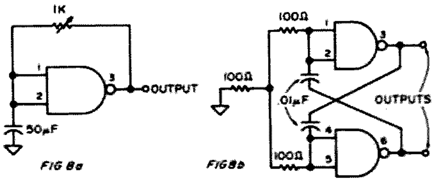

Fig. 8. Two more square wave generators. The oscillator of Fig. 8(a) will oscillate at approximately 45 Hz. The oscillator of (b) will have a frequency of about 50 kHz. See text for description of how frequency may be varied.

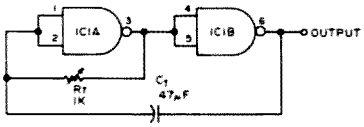

Fig. 7. Two sections of the SN7400 connected to form a square wave oscillator. See text for description of circuit operation.

Crystal Oscillator

Finally, as shown in Fig. 9, the NAND gate can be used to make a crystal oscillator for applications that require a more stable clock pulse than that yielded by the previously described square wave oscillators. As can be seen by comparison with Fig. 8(b), the crystal oscillator is basically the same as the square wave oscillator except for the replacement of one capacitor with a quartz crystal. The upper frequency range of the NAND gate as used in this application is typically 15 MHz though some gates will oscillate at somewhat higher frequencies. The addition of a trimming capacitor in the circuit of Fig. 9(b) will allow for netting the oscillator frequency if this is deemed necessary in certain applications.

Conclusion

The list of applications of the 7400 quad NAND gate presented in this article is by no means complete. Like all other devices, its possible applications are limited only by the ingenuity of the circuit designer. The basic simplicity of the device itself, its low price tag, and its versatility make it the ideal device from which the digital logic neophyte can gain valuable insight into digital logic circuitry. ■

References

1. Signetics Digital 54/7400 Data Book, copyright 1972, page 9.
2. W. F. Stortz K3QKO, "Can a Keyer Be Logical?", *73 Magazine*, Dec., 1974, page 53.
3. A. A. Kelley K4EEU, "Slow-Scan TV Test Generator," *Ham Radio*, July, 1973, page 6.
4. Stirling Olberg W1SNN, "Logic Oscillator for Multi-channel Crystal Control on VHF FM," *Ham Radio*, June, 1973, page 46.
5. C. A. Ellsworth W6OXP, and W. G. Malloch W8KCQ, "RTTY Message Generator," *Ham Radio*, Feb., 1974, page 30.
6. Don Lancaster, "IC Logic Demonstrator," *Radio-Electronics*, May, 1972, page 51.
7. H. Edward Roberts and David Bunnell, "Basic Digital Logic Course," *Popular Electronics*, Dec., 1974, page 38.

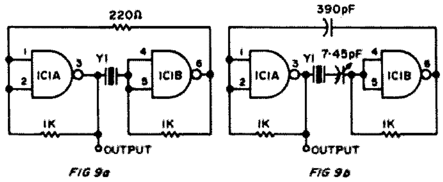

Fig. 9. Two examples of how the SN7400 can be connected to form a crystal oscillator.

Mike Brame WB8EQQ
#41, 7519 Dorr St.
Toledo OH 43617

EL Cheapo Signal Tracer

--test gear for the cheapskate

Every ham needs a cheap signal tracer and audio amplifier at some time or another. I discovered my need for one on the day that I connected 117 V ac to the audio output jack of my six meter receiver. (Please don't write and ask how I did this — there are painful memories involved.) When the smoke cleared, the two audio output transistors and their transformer were in such a mess that they were eligible for foreign aid (it's a Japanese receiver). I wanted to get back on the air fast, so I rummaged through the junk box until I found a cheap transistor radio. With this, a resistor, and a capacitor, and ten minutes of work, we were back in business. Best of all, the transistor radio is still usable instantly if I ever fix the six meter receiver.

The modification to the pocket radio involves four steps. First, find the earphone jack and the earpiece and

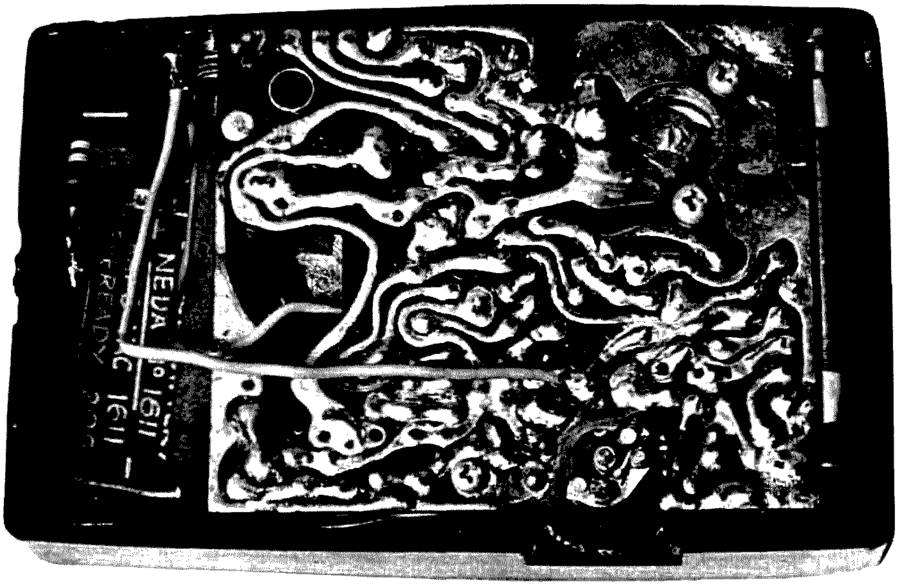

This photo shows the dropping resistor connected to the positive battery terminal, and the lead from the volume control to the external jack.

Photos by Mike Likavec WA8NNX

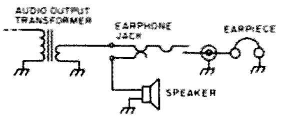

Fig. 1. The original circuit.

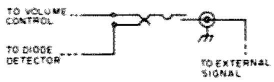

Fig. 2. The modified circuit.

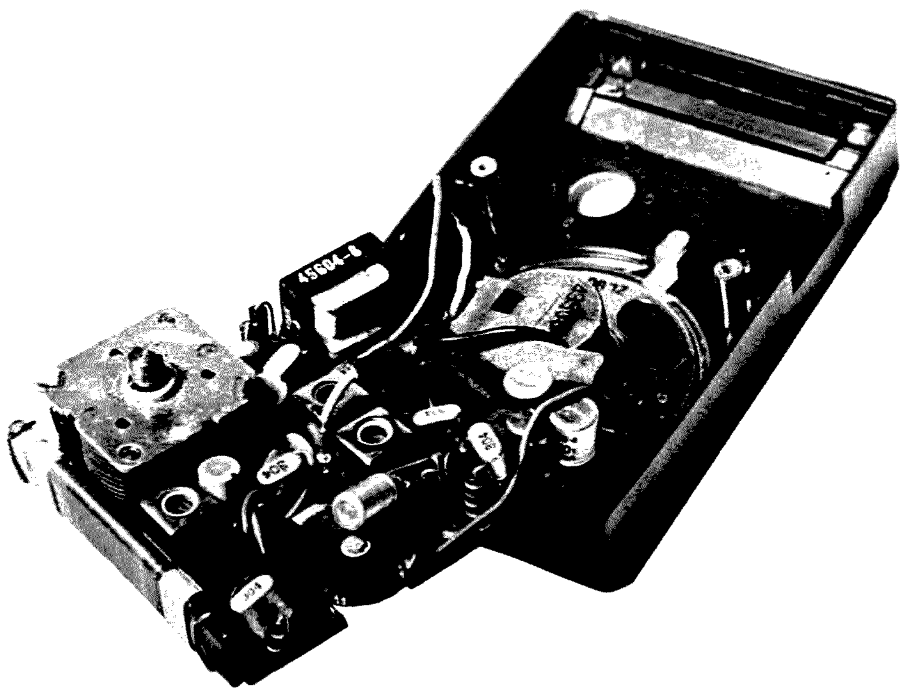

This photo shows the diode detector (nestled snugly between two i-f cans) and its lead (going to the jack).

cord that plug into it. Inside, the jack will have three wires connected to it: a ground, a lead to the speaker, and another one trailing off to the innards of the radio somewhere. This last wire actually goes to the secondary winding of the audio output transformer (see Fig. 1).

Leave the ground wire undisturbed. Unsolder the wire to the speaker and the one to the innards, both at the jack, and note which went where. Solder the ends of these two together and tape them. Now the radio is permanently connected to its built-in speaker.

The second step involves finding the point where the diode detector connects to the volume control. This can be found by tracing back from the center pin of the volume control along the foil until you find the glass diode. Unsolder the end of this diode which goes to the volume control, but leave the other end connected. Solder a piece of insulated hookup wire to the free end of the diode. The other end of this wire is soldered to the pin on the earphone jack that was formerly connected to the speaker. Solder another piece of insulated wire to the point on the circuit board where the free end of the diode used to be. The other end of this wire is connected to the remaining pin on the earphone jack that used to be connected to the innards. Now, without a plug in the earphone jack, the pocket radio will play normally, since the diode detector is connected to the volume control once again, although now through the contacts of the earphone jack (see Fig. 2).

For the third step, cut the earpiece off the end of its cord. Strip the ends of the wires, and with an ohmmeter or continuity checker, find out which of the wires goes to the inner pin of the jack, and mark it. The other lead is the ground connection, which can be connected to an alligator clip. Solder one lead of a 1 uF capacitor to the "hot" lead. This capacitor will keep stray dc voltages out of your pocket radio, thus preventing premature trauma. The free end of the capacitor is the probe tip, and is to be connected to the equipment under test, wherever you suspect audio should be. With the earphone plug inserted in the jack, and the probe connected to the circuit under test, you should now hear the desired signal, rather than Olivia Newton-John. The lead with the capacitor can be built into the plastic end of a discarded ballpoint pen, to make a neater probe tip. The voltage rating of this capacitor must be higher than any voltage you have in the equipment under test. For tube type receivers, 600 volts is usually adequate, while a 50 volt capacitor is adequate for transistor receivers and hi-fi gear.

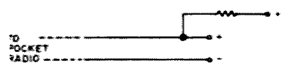

Fig. 3. Battery terminals with added dropping resistor.

If you're going to run the pocket radio from its own battery, this step may be omitted. If you would like to run the pocket radio from the voltage in the gear under test, this formula can be used to find the right value of dropping resistor:

$$\text{Resistance} = \frac{(\text{Available Voltage}) - (\text{Voltage Needed})}{\text{Receiver Current}}$$

For example, if your pocket radio needs 9 V to operate, and 12 V is available, and the pocket radio draws an average of about .010 A, then by plugging the numbers in:

$$\frac{12\text{-}9}{.01} = \frac{3}{.01} =$$

300Ω resistance needed

The wattage needed for the resistor can be figured by the formula $I^2R = P$; that is, the current multiplied by itself, times the resistance, gives the needed power rating in Watts. In the example above, it would be (.01) x (.01) x 300 = .03 Watts. A ¼ Watt resistor would give a more than adequate safety margin. If you're planning to use a 150 V supply to run the pocket radio, a 14.1 kΩ at 1.4 Watts is the calculated value, and 15 kΩ at 5 Watts is adequate and a practical common value. This resistor is connected between the positive terminal of the battery holder and the supply voltage point, as shown in Fig. 3 and the photo.

Once completed, the pocket radio can be used normally, and, by just plugging in the earphone plug/test probe, it becomes a signal tracer or audio amplifier. Total cost is less than fifty cents as promised, and you've still got your radio. ■

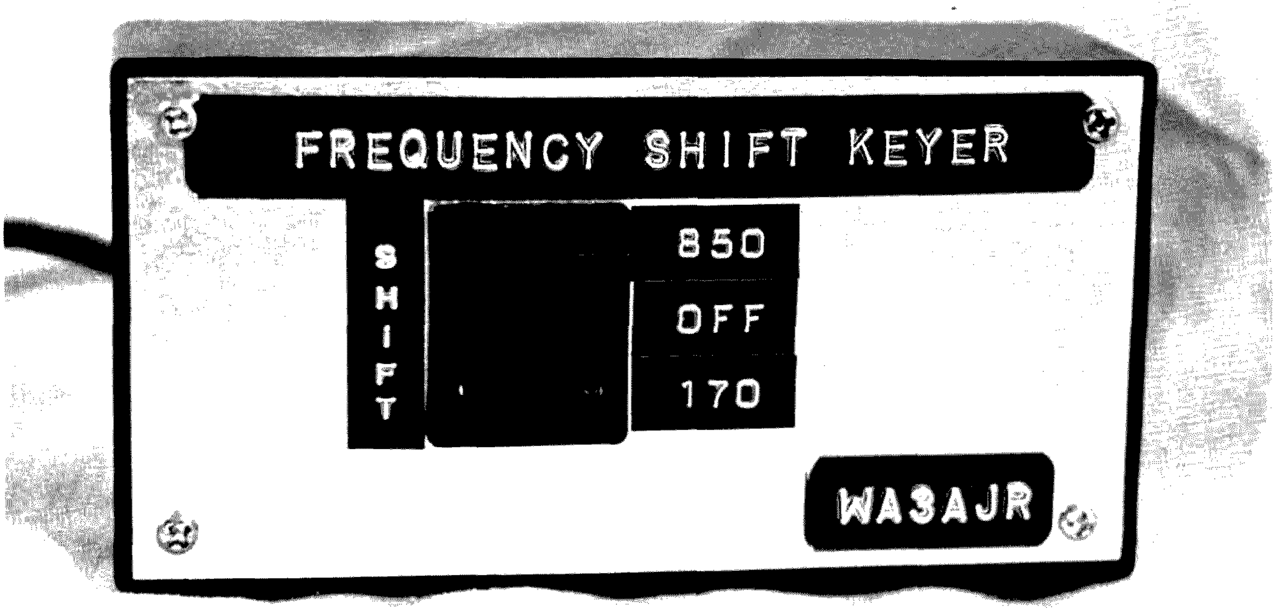

Marc I. Leavey, M.D. WA3AJR
10-J Tentmill Lane
Pikesville MD 21208

FSK with the SB-401

- - simple way to get on RTTY

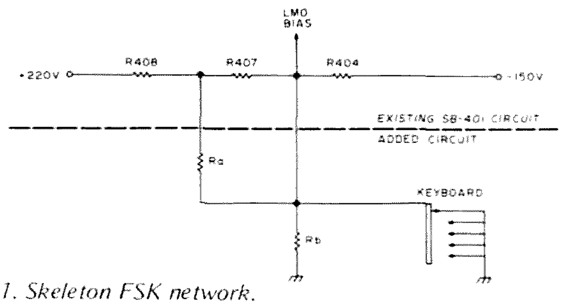

Fig. 1. Skeleton FSK network.

In the good old days (and when I say good old days I don't mean George M. Cohan days), the average ham had a CW or CW-AM (remember that?) transmitter and a separate VFO. For those enterprising enough to try radioteletype (RTTY), a simple diode keyer applied to the cathode of the oscillator tube (another oldie-but-goodie) would produce a frequency shifted signal. Those wanting to do some background reading, or who may still have a separate VFO and wish to try the old way, should refer to an excellent discussion of a "shift-pot" circuit in *QST*, May, 1965. Irv Hoff, a RTTY pioneer,

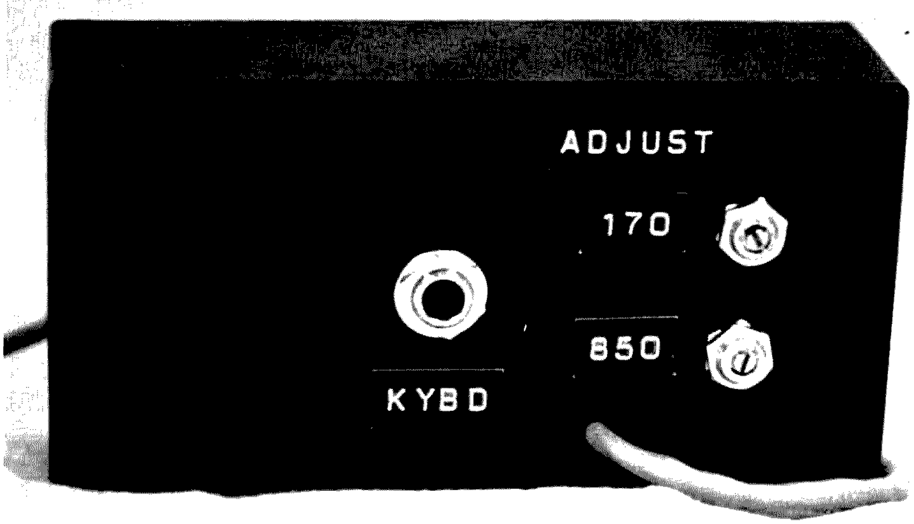

had a series that year which is required reading for anyone contemplating RTTY. If you are going to use the old, but venerable, shift-pot circuit, then you are excused from reading the rest of this article, and may drool at the ads elsewhere in this magazine. If not, stay with me.

Not too many years ago, a new beasty, SSB (or SSSC, as it was first named) hit the airwaves. In order to put one of *those* on RTTY, you had two alternatives: Either use the rig as an expensive CW transmitter and use a shift-pot circuit, or inject audio tones and shift them, thus producing FSK at the output. Again, Hoff's landmark *QST* series goes into much detail on this. The AFSK input approach is certainly simple, but unless the transmitter is perfectly "clean" with regard to unwanted sideband and carrier, and the audio tones are perfect sine waves, all sorts of spurious signals can result. The end effect is to make us use the SSB rig as a CW transmitter, and fall back on the shift-pot.

Enter a new era. With the SB-400/401, Heathkit introduced the ham to the Linear Master Oscillator. Unlike the VFO, the LMO is said to be linear over the entire band, making frequency readout and calibration a cinch. Only one hang-up: The LMO is *sealed.* How can you transmit FSK? Until now, the only way has been the audio input (AFSK) method. This article details a method for frequency shift keying these transmitters that is easier than using the old shift-pot.

In order to maintain the same frequency on upper and lower sidebands, and still get the audio filtered through a mechanical filter to generate said sideband, it becomes obvious that some means of shifting the LMO frequency must be inherent in the system. The "BIAS" input does just that. By shifting the bias, the frequency of the LMO is shifted several kHz. Now, all we have to do is shift the bias in step with the desired FSK signal, and reduce the magnitude of the shift to 850 Hz, 170 Hz, or whatever is desired.

The circuit, shown in Fig. 1, does just that. Bias voltage for the LMO is derived from the junction of R404 and R407. A ground is established through Ra and Rb, with Rb shorted on "mark" – producing a high frequency. In order to make the circuit practical, a means of selecting

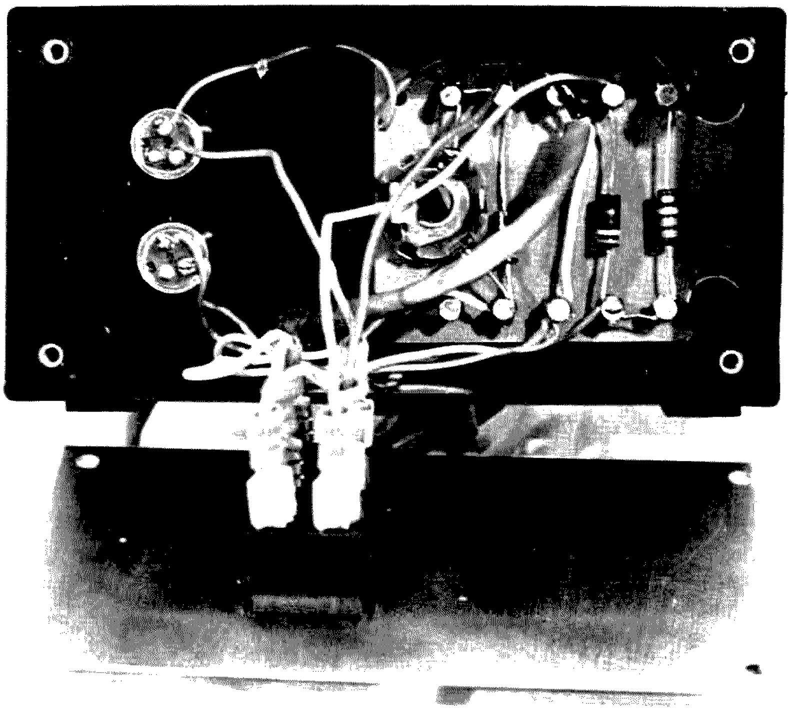

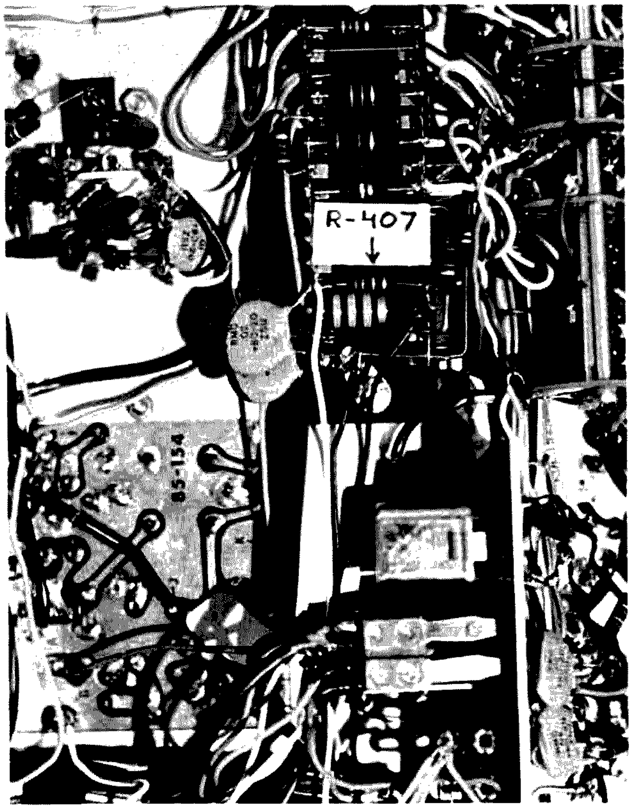

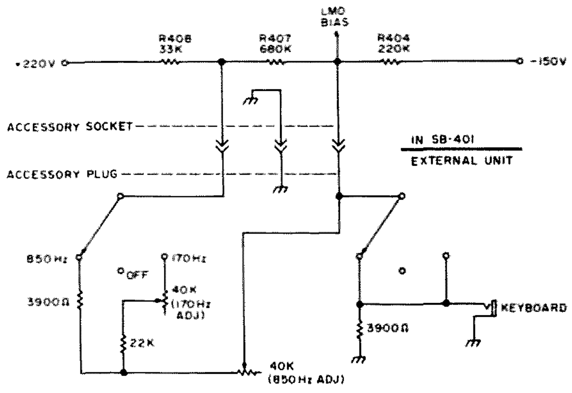

Fig. 2. Frequency shift keyer.

shifts, and disabling the circuit for SSB operation, is necessary. These additions result in the final circuit, Fig. 2. Keying for the FSKer must be done "dry," with clean contacts. This makes direct keyboard or loop keying impractical. A polar relay, or better yet a magnetic reed relay, may be used. For a discussion of the magnetic reed relay in keying, see my article, "AFSK Revisited," in the January, 1974 issue of *73 Magazine*. In it I go into the how and why of reed-relay keying.

Connection to the SB-401 is made on the underside, at Terminal Board No. 2. R407 is available there, and leads may be run from each side, and ground, to the accessory socket in the back. If you have lost the connectors for the socket, they are available from Heath, or in many parts stores (Waldom/Molex .093" Mating Pin Terminals, No. 1381-80). The unit may then be plugged in or unplugged as desired.

Calibration and operation are as with any FSK network. With the keyboard contacts in "MARK" condition, zero the transmitter to the desired frequency. Open the keyboard contacts and adjust the appropriate potentiometer for either 850 Hz or 170 Hz shift. The transmitter should be loaded to only 100 Watts or so, rather than the full 175 Watts, as long continuous transmissions are not conducive to final tube health. Cutting back from 175 Watts to 100 Watts is less than a 3 dB change, anyway. A straight key plugged into the key jack will serve as both a transmit/receive switch and a means to identify the station on CW.

Although the slant of this article has been directed toward the use of FSK for RTTY, any variable modality may be introduced to produce a corresponding frequency shift. Rather than use audio tones, an enterprising SSTV enthusiast might find herein a way to produce that peculiar signal in a novel way.

At any rate, I hope this method can find wide application, and get more of you out there on the green keys. ■

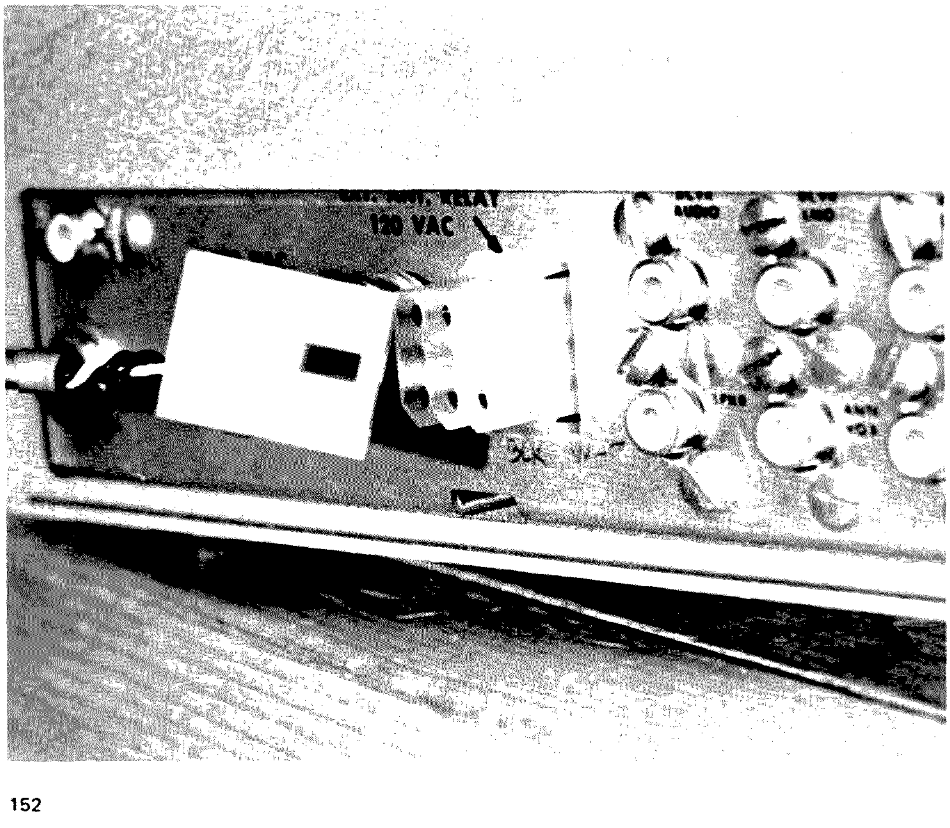

Social Events

DUNSEITH ND
JULY 10-11

The 13th Annual International Hamfest will be held July 10 and 11, 1976 at the International Peace Garden between Dunseith, North Dakota and Boissevain, Manitoba. This year it will be held in the Canadian Pavilion. Excellent camping, contests, prizes, party, dance and meetings. For information write WBØGFZ or VE4OD.

SANTA MARIA CA
JULY 11

The Satellite Amateur Radio Club is sponsoring the Santa Maria Amateur Radio Picnic And Swapfest to be held on Sunday, July 11th, 1976, beginning at 12 noon at the Newlove-Union Oil Picnic Grounds on Orcutt Hill. Watch for the signs marking the turnoff, 1 mi. south of Clark Ave. on US 101. Talk-in will be on 146.52 and 7280 kHz.

The highlight of the event is the Santa Maria style barbecue, to be served at 2:30 pm. All the meat, salad, beans, bread and salsa that you can eat. Soft drinks will be available, but bring your own beer.

The main door prize is a Tempo One 80-100 meter transceiver. Other prizes, too. Swap tables available at $3.00 each.

The meal alone is well worth the drive from L.A. or the central valley. Tickets are only $5.00 for adults/$2.50 under 12, and can be obtained by sending a check made out to Santa Maria Swapfest, Route 1, Box 55A, Santa Maria CA 93454.

Please obtain tickets in advance so that enough meat can be ordered.

SOMERSET KY
JULY 11

The Lake Cumberland Amateur Radio Association's hamfest will be held Sunday, July 11, 1976 at 10 am at the Somerset Outdoorsmen's Club, Somerset KY 42501. Lunch will be available.

CHARLESTON SC
JULY 11

The Charles Towne Hamfest will be held at the Gaillard Municipal Auditorium on Sunday, July 11, 1976, in Charleston SC. Registration is $2, which includes a door prize ticket. Activities include an indoor flea market, displays, home brew contest, CW copying contest, historic tours, and a special program on the Marconi Wells Fleet Wireless Station. Saturday activities include QCWA, MARS, S.C. SSB Net Banquet, and a hidden xmtr hunt. Talk-in on 34/94 and 3915. For further information write — Charles Towne Hamfest, Box 4555, Charleston SC 29405 or check into the S.C. SSB net on 3915 at 7 pm local time.

CORUNNA MI
JULY 17

The Shiawassee Amateur Radio Association (SARA) of Owosso, Michigan is hosting the Michigan Buzzards Roost and Emergency Nets picnic and sponsoring the 2nd annual SARA Swap and Shop at McCurdy Park, Corunna, Michigan. Early Bird get-together Saturday evening, July 17, Swap and Shop, picnic on Sunday, 8 am to 5 pm, July 18. Free admission, tables for Swap and Shop $2.00, tickets available for drawings, overnight trailer and camping space available. Talk-in on 3930 kHz, 146.52 MHz with repeaters on 147.63/.03 and 449.30/442.10 MHz. For further information, write SARA, 1302 W. Main St., Owosso, Michigan 48867.

FLOURTOWN PA
JULY 18

Picnic. Friends of WR3ABE bring family and food, noon, Sunday, July 18, 1976 at Fort Washington Park, Flourtown PA.

TERRE HAUTE IN
JULY 18

Turkey Run Hamfest has MOVED! New location is the Vigo County Fairgrounds on Highway 41 just South of Terre Haute. There will be prizes galore, lots of flea market space under a roof, XYL Bingo, and plenty of overnight camping will be available. Presale tickets are available 4 for $5 or $1.75 ea. At the gate 3 for $5 or $2 ea. For further information or tickets write to Wabash Valley Amateur Radio Assn., P.O. Box 81, Terre Haute IN 47808.

PORTAGE IN
JULY 18

The Lake County Amateur Radio Club's 2nd annual hamfest is July 18 at the Isaac Walton League in Portage, Indiana. Take I-94 to Ind. 249 exit, then north on Ind. 249 ½ mile. Tickets $1.50 advance, $2.00 at gate. Write: Herbert S. Brier W9EGQ, 409 S. 14th St., Chesterton, Indiana 46304.

SLATER MO
JULY 24-25

The Antique Aircraft and Amateur Radio Show will be held Saturday and Sunday, July 24 and 25, 1976 at the Slater Memorial Airport. Registration $1 in advance: $1.50 at the door. Buffalo burger feed Saturday night and Sunday noon. Talk-in 3963 kHz, 146.94 and 146.28/.88. For additional information and advance tickets write Dale Beilsmith WØKNF, 807 North Broadway, Slater MO 65349, (816) 529-2173.

CROSSVILLE TN
JULY 24-25

The Oak Ridge Amateur Radio Club, Inc., Annual Crossville Hamfest will be held in Crossville TN on July 24-25, 1976 at the Cumberland County Fairgrounds. Technical forums will be at the Holiday Inn on July 24 and the banquet will be at Holiday Hills Country Club on Saturday night with a Breeder Reactor Program planned. Sunday, July 25, features a picnic, flea market, raffle of many valuable prizes, and "eyeballing your friends" at the fairgrounds.

CANTON OH
JULY 25

The Tusco Amateur Radio Club and the Canton Amateur Radio Clubs are holding their Second Hall of Fame Hamfest on July 25, 1976. It will be held at the Stark County Fairgrounds, Canton, Ohio. This weekend, by the way, is the weekend of the National Pro Football Hall of Fame Football Game and Parade.

PITTSBURG KS
JULY 25

The annual Pittsburg Repeater Organization hamfest and watermelon feed will be held on Sunday, July 25, 1976 at the Lincoln Park shelters in Pittsburg, Kansas. Location is at 10th Street and Bypass 69 intersection. There will be a covered-dish picnic, transmitter hunts, swap meet, and lots of prizes including many for the YLs and harmonics. Talk-in will be WRØADZ 34/94 and 52/52.

FLAGSTAFF AZ
JULY 30-AUG 1

The Ft. Tuthill Hamfest will be held July 30-31 and August 1 at Flagstaff, Arizona at Coconino County Fairgrounds across I-17 from airport. R-V and tent camping. Three days in the tall cool pines. Swapmeet, tech sessions, contests, prizes, pot luck, and exhibits. Talk-in 146.22/82, 146.34/94, 146.52 and 3992 kHz.

WEST MILFORD NJ
JULY 31-AUG 1

The 550 Amateur Radio Club and Oakland Repeater Association will hold its annual hamfest/picnic at the Westbrook Park Kampgrounds, West Milford, New Jersey on July 31 and August 1, 1976. All amateurs, their families and guests are invited. Talk-in via club repeater WR2AHD 147.49 MHz/146.49 MHz and 223.34 MHz/224.94 MHz. For additional information contact Mark Kirshner WA2HLE, 73 Page Drive, Oakland, New Jersey 07436, phone (201)-337-0316.

WASHINGTON MO
AUG 1

The Zero-Beaters ARC will hold their annual hamfest on Sunday, August 1, at Washington, Missouri City Park. Free parking, auction, and bingo for the XYLs. No admission fee or fee for parking in the traders row. Many prizes including station accessories, books and a handmade quilt. For info or tickets contact Al Lanwermeyer WNØQBS, or Zero-Beaters ARC, WAØFYA, Box 24, Dutzow, Mo. 63342.

LEVELLAND TX
AUG 1

The 11th Annual Northwest Texas *Emergency Net* swapfest and picnic will be held in the City Park in Levelland, Texas on Sunday, August 1, 1976. Bring your own picnic basket. Free registration begins at 0900. Lunch at 1230. Swapping all day. Tables are provided. This event is for the entire family and is jointly sponsored by the Hockley County Amateur Radio Club and the Northwest Texas Emergency Net. Mobile talk-in frequency is on two meters only on 146.28-88 Mc., the Levelland Repeater: WR5AFX.

ANGOLA IN
AUG 1

Attention Midwest Amateurs! August 1, 1976 at the Steuben County Fairgrounds near Angola, Indiana will be the annual Fort Wayne Repeater Association FM picnic. Flea market, fun and prizes. Tickets are $1.50, children under 12 free. Talk-in frequencies will be 146.16-.76, .28-.88, .52 and .94. For further information contact Jerry Prumm W89FOC, PO Box 6022, Fort Wayne, Indiana 46806.

MT LEBANON PA
AUG 1

Western Pennsylvania — the 39th Annual Hamfest of the South Hills Brass Pounders and Modulators will be held on August 1st, from noon until dusk, at St. Clair Beach, Upper St. Clair Township, 5 miles south of Mt. Lebanon on Route 19. Swap and shop, picnic space and swimming for the family. Mobile talk-in 29.0 and 146.52. Information and pre-registration at $1.50 per ticket ($2 at door) from Fred Schreiber K3FIW, 181 County Line Road, Bridgeville PA 15017. Vendors must register.

MACK'S INN ID
AUG 6-8

The Wyoming - Idaho - Montana - Utah Ham Club would like to announce that the 44th Annual WIMU Hamfest will be held August 6-8 at Mack's Inn, Idaho just 20 miles west of Yellowstone National Park. There will be a full line of activities including our famous breakfast under the pines. Camping on the grounds is available plus motels, cabins and restaurants. Pre-registration is $6 per person, $1 for children under twelve. For registration or more info contact: WIMU, c/o Larry Jacobs WA7ZBO, 5655 So., 4060 West, Salt Lake City, Utah 84118.

OKLAHOMA CITY OK
AUG 7-8

The Oklahoma Ham Holiday and State ARRL Convention will be held Saturday and Sunday, August 7 and 8

in Oklahoma City, Oklahoma. The meeting will feature the largest flea market in the Southwest, special programs, technical seminars, equipment displays, and unique activities for the ladies. For information and advance registration write Oklahoma Ham Holiday, Post Office Box 20567, Oklahoma City, Oklahoma 73120.

SAUK RAPIDS MN
AUG 8

The St. Cloud Radio Club Annual Hamfest will be held on Sunday, August 8, 1976, from 10 am till closing, at the Sauk Rapids Municipal Park. Free parking and overnight parking, hot dogs and pop available. Swapfest and ham gear sale. Talk-in on 34/94 and 3925. Hope to see you all there. For further info, contact Bill Zins WAØOTO, St. Cloud Radio Club, PO Box 752, St. Cloud MN 56301.

FT. WASHINGTON STATE PARK PA
AUG 8

The Mt. Airy VHF Radio Club (the Packrats) are holding their annual family picnic in the Flourtown Area of the Fort Washington State Park on Sunday, August 8, 1976 (rain date 15 August). Talk-in via W3CCX/3 on 52.525, 146.52, and 222.98/224.58 MHz.

CONCORDIA KS
AUG 8

Hamfest – Cloud County Community College, Concordia, Kansas, August 8, 1976. Swimming, tennis, and radio-controlled model airplanes for the kids. Events for the XYLs. Prizes, meetings: 2 meter, ARRL, MARS, satellite. WØFNS Award, ham auction. Lew McCoy will speak at August 7 banquet.

PETOSKEY MI
AUG 14

Straits Area Radio Club Swap and Shop will be held August 14 from 8 am to 4 pm at Emmet County Fairgrounds on US 31, ½ mile west of southern junction of US 31 and US 131, in Petoskey, Michigan. All amateurs, CBers, SWLs, S1 admission, 50¢ per table, door prizes, lunch counter, free parking. Talk-in on 3.920 MHz, channel 1, 146.52 MHz.

EAST RUTHERFORD NJ
AUG 14

The Knight Raiders VHF Club's auction and flea market will be held on Saturday, August 14th, at St. Joseph's Church of East Rutherford, Hoboken Road, East Rutherford. Free admission, free parking, refreshments available. Talk-in will be on 146.52. Doors will open 10 am. Flea market tables: $6 for a full table, $3.50 for half a table. Reserve your tables in advance by writing to The Knight Raiders VHF Club, K2DEL, PO Box 1054, Passaic NJ 07055.

NEW CASTLE DE
AUG 15

Delmarva's new annual hamfest will be held August 15, 1976 at Wilmington College, New Castle, Delaware – U.S. Route 13 just north of Delaware Route 141 in New Castle, New Castle County. Tail-gating $2.50 per space. Rummage and display tables $5 per table. Food and camping available. Ladies' Bingo. Admission $1.75 advance – $2.50 at gate. Children are free. Make all checks payable to Delmarva Hamfest Inc. Mail all requests for reservations and information to John Low K3YHR, 11 Scottfield Drive, Newark DE 19713.

HUNTSVILLE AL
AUG 15

The North Alabama Hamfest will be held on Sunday, August 15 at The Mall in Huntsville, Alabama. A hamfest supper will be held on Saturday night. Events include prize drawing, flea market, ARRL forum, MARS meetings, displays, and XYL programs. Talk-in on 146.94 and 3965. For more information contact N.A.H.A., PO Box 423, Huntsville AL 35804.

SPRINGFIELD MO
AUG 22

The Southwest Missouri Amateur Radio Club will hold its annual hamfest, swap meet and family picnic on August 22, 1976, at Lake Springfield Park. This picnic attracts over two hundred radio amateurs and their families from southwest Missouri, northwest Arkansas, southeast Kansas, and northeast Oklahoma each year. For more information write: James A. Crooke, Secretary, Southwest Missouri Amateur Radio Club, 1601 South Kimbrough Avenue, Springfield MO 65807.

AURORA IL
AUG 22

The Fox River Radio League W9CEQ Hamfest will be held August 22, 1976 at beautiful Phillips Park, east edge of Aurora, U.S. Hwy. Rt. #30. All day family fun, picnic, zoo, lake and flowers. Same old price – $1.00 advanced with SASE to FRRL, PO Box 443 Aurora IL 60507. Talk-in on 146.94.

ATLANTIC CITY NJ
AUG 28-29

The Personal Computing '76 Consumer Trade Fair will be held August 28-29, 1976 in Atlantic City, New Jersey. Seminars and technical talks, major exhibits, demonstrations, door prizes, and free literature all about software and hardware development, microcomputers, memories, comparisons, interfacing, implementation, AMSAT, computerized music, video terminals, construction, printers, games, and tapes. Admission $5 advanced, $7.50 at door (includes exhibits and seminars). Exhibition booths – call (609) 927-6950.

LA PORTE IN
AUG 29

The combined La Porte County Amateur Radio Clubs will hold their Fall Hamfest on Sunday, August 29th, 1976 at the La Porte County Fairgrounds in La Porte, beginning at 7 am Chicago time. Overnight camping available. Indoors in case of rain. No table or set-up charge. Paved midway, good food and drink. $2 donation at the gate. For more information write: PO Box 30, La Porte IN 46350. Talk-in on 01-61 and 94 simplex.

SO DARTMOUTH MA
AUG 29

The Southeastern Amateur Radio Club is having a Flea Market and Picnic on August 29, 1976 at the Stackhouse Fairgrounds in So. Dartmouth MA. Space will be $2 and table an additional $2. Homemade food, magic show for the children, and

many raffles. For a flier write: Arthur Sylvia, 317 Nemasket St., New Bedford MA 02740.

MENA AR
SEPT 4-5

The Queen Wilhelmina Hamfest 1976 is Saturday and Sunday, September 4 and 5, at Queen Wilhelmina State Park, Rich Mountain, Mena, Arkansas. Excellent accommodations and food at the newly restored historic Queen Wilhelmina Castle. Door prizes hourly, grand prize, new equipment displays, flea market, camping area with utilities and rest rooms, amusements for harmonics. Talk-in 146.52. For more information write WB5CXX, P.O. Box 5191, Texarkana TX or phone (214) 838-0625.

DANVILLE IL
SEPT 5

The Danville Hamfest will be held at Douglas Park, Danville, Illinois September 5. Downstate Illinois' largest. Great prizes. Advance tickets $1.75 ea., 3/$5 with an SASE to Jim Wilson, 308 First, Ridgefarm IL 61870. Talk-in 22/82 and 3910.

MELBOURNE FL
SEPT 11-12

The 11th annual Melbourne, Florida hamfest will be held Saturday and Sunday, September 11-12, 1976, from 9 am to 5 pm each day in the air-conditioned Melbourne Civic Auditorium located on Hibiscus Boulevard. Donation is $2.50 per adult. Full program includes forums, meetings, auction, swap tables, commercial exhibits, awards, prizes, etc. Talk-in on 25/85 and 52/52. Sponsored by Platinum Coast Amateur Radio Society. For more info write PO Box 1004, Melbourne FL 32901.

FINDLAY OH
SEPT 12

The 34th Annual Findlay Hamfest will be held on Sept. 12 at Riverside Park, Findlay, Ohio. Talk-in 146.52. For advanced tickets and/or info write: Clark Foltz W8UN, 122 W. Hobart St., Findlay, Ohio 45840 (SASE please for under 5 tickets).

CHICAGO IL
SEPT 18-19

Radio Expo '76 will be held Saturday, Sept. 18 and Sunday, Sept. 19th at the Lake County Illinois fairgrounds, Routes 45 and 120 north of Chicago. Featured this year are an exhibit hall with dozens of displays by amateur manufacturers and distributors, forums with the FCC's John Johnston, *73*'s Wayne Green, ARRL, OSCAR and more. There's a giant flea market with both indoor and outdoor space, plus plenty of room for campers and trailers on the grounds. No waiting in line — the flea market opens Friday night for set-up. No extra charge, either. Talk-in on WR9ABY, 146.16/76, Chicago. Accommodations reserved at the Holiday Inn in Mundeline, Ill., a few minutes south of the fairgrounds. Mention Radio Expo. Advance tickets, $1.50 from Box 1014, Arlington Heights, Ill. 60006.

NEW KENSINGTON PA
SEPT 19

The Skyview Radio Society's Swap & Shop will be held on Sept. 19, 1976 at the Skyview Radio Club, New Kensington PA. Registration $1. Talk-in 52-52 and 04-64.

MOUNT CLEMENS MI
SEPT 19

The Fourth Annual L'Anse Creuse ARC Swap & Shop will be held on September 19, 1976 at the L'Anse Creuse High School in Mount Clemens, Michigan. Doors will be open from 0900 to 1500 EDST. First prize $200 cash. Talk-in on 146.52 and 146.94. Admission $1.50 at door, $1 in advance. For tickets enclose $1 and SASE and send to Robert Harder WB8ILI, 51769 Base, New Baltimore MI 48047.

NOTICE

We have received reports that W6JTT's "Simple VHF Monitor" (July, 1976, page 160) may interfere with certain kinds of aircraft instrumentation. While we continue to investigate this possibility, we suggest that readers refrain from constructing this converter.

petitioners all propose to increase the frequencies available to stations using type A4 or F4 (facsimile) emission. In RM-2170, petitioner asserts that ". . . (technology has) reached a point where the economical transmission of pictures is possible in a bandwidth no greater than a standard single sideband signal . . . Tests have indicated that it is even possible to transmit and receive high quality pictures in a bandwidth as narrow as 1900 Hz . . . " In RM-2330, petitioner claims ". . .the region from 51.0 to 52.5 MHz is largely unused in current practice." Several reasons are cited as justification for this claim, including the present rule which limits the bandwidth of an F3 emission to the same maximum bandwidth of an A3 emission. This, it is claimed, has also had an adverse effect on the growth and development of repeater stations in the 52 to 54 MHz band. In RM-2429, petitioner asserts that "ASCII, American Standard Code for Information Interchange, has become the most popular mode of mechanical and digital encoding for both computer and communication teleprinter applications due to greater character and function versatility." The rules presently authorize only the use of the International Telegraphic Alphabet No. 2 five-unit (start-stop) teleprinter code for amateur teleprinter stations at standard speeds of 60, 67, 75, or 100 words per minute. In RM-2550, the American Radio Relay League, Inc., proposes to delete all references to teleprinter operating speeds and to permit the use of any of the standard codes in military or commercial usage. In RM-2507 and RM-2545, petitioners propose to permit operation of amateur television repeaters on frequencies in the 420-450 MHz band which are not presently available for repeater stations.

4. Rather than further complicate the present rules with additional provisions to accommodate the petitioners' requests, we are herein proposing to delete all references to specific emission types in Part 97 of the Rules. We propose, instead, to replace the present provisions with limitations on the permissible bandwidth which an amateur signal may occupy in the various amateur frequency bands. Within the authorized bandwidth limitations, any emission type would be permitted.

5. We propose that maximum permissible bandwidth increments be established as follows: less than 0.35 kHz, less than 3.5 kHz, less than 35 kHz, or 35 kHz or more. Each Amateur sub-band would have an appropriate maximum permissible occupied bandwidth. For instance, Morse code and teleprinter emissions would generally fall within the 0.35 kHz bandwidth sub-bands. Telephony, facsimile and slow scan television emissions using conventional single sideband techniques could operate in the 3.5 kHz bandwidth sub-bands. Double sideband amplitude modulation, narrowband frequency modulation and independent sideband emissions would be excluded from these sub-bands. However, these emissions using conventional amplitude modulation or frequency modulation techniques could operate in the 35 kHz bandwidth sub-bands. In addition, any other emissions that satisfy the bandwidth limitations would be permitted on all appropriate amateur frequencies. We also propose to establish a finite limit on the maximum permissible output power of all emissions outside the authorized occupied bandwidth, including spurious modulation products, harmonics, parasitic oscillations, etc. Because of a significant increase in activity in the 420-450 MHz band, we propose to limit the maximum authorized bandwidth in this band to 35 kHz. Since adoption of this proposal would eliminate the use of fast scan television, we invite comments as to what useful purpose is served, other than experimentation, by transmission of television signals in the Amateur Service.

6. The Commission is aware that some amateurs desire to use modes of emission which are not specifically provided for in the rules. We hope, through this proceeding, to produce amended rules which will encourage amateurs to develop and implement techniques for more efficient utilization of the radio spectrum, and to increase service to the public through the establishment of improved communications systems. Many new and unusual emission types will eventually appear on amateur frequencies as a result of these amendments. It should therefore be noted that the provisions of Section 97.117, which prohibit the use of codes or ciphers for the purpose of obscuring the meaning of the communications, will remain in effect. However, the employment of signals encoded solely for the purpose of facilitating communications would be permitted under the revised rules. In order to facilitate identification of stations using these emissions, we are proposing a minor change to clarify the present rule for station identification which would continue the requirement for use of either the international Morse code or unencoded telephony.

7. The specific rules changes proposed herein are set forth in the attached Appendix II. Authority for these proposed amendments is contained in Sections 4(i) and 303 of the Communications Act of 1934, as amended.

8. Pursuant to applicable procedures set forth in §1.415 of the Commission's Rules, interested persons may file comments on or before June 23, 1976, and reply comments on or before July 23, 1976. In accordance with the provisions of §1.419(b) of the Commission's Rules, an original and eleven copies of all statements, briefs, and comments filed shall be furnished the Commission. All relevant and timely comments and reply comments will be considered by

the Commission before final action is taken. The Commission may also take into account other relevant information before it, in addition to specific comments invited by this Notice. Responses will be available for examination by interested parties during regular business hours in the Commission's public reference room at its headquarters in Washington, D.C. (1919 M Street, N.W.).

FEDERAL COMMUNICATIONS COMMISSION
Vincent J. Mullins
Secretary

APPENDIX I

Petition Number	Petitioner
RM-1429	James L. Turrin
RM-2163	Jerome C. Grekowsky
RM-2170	Howard M. Krawetz
RM-2330	Gordon Schlesinger
RM-2429	Raymond E. Heimberger
RM-2507	Bruce J. Brown
RM-2545	Biagio Presti for Aptron Laboratories
RM-2550	Robert M. Booth, Jr., for The American Radio Relay League, Inc.

APPENDIX II

Part 97 of Chapter I of Title 47 of the Code of Federal Regulations is amended as follows:

1. In §97.7, sub-paragraph (d)(2) is amended to read as follows:

§97.7 *Privileges of operator licenses.*

* * * * *

(d)(2) Radio telegraphy using the international Morse code is authorized in the frequency bands 3700-3750 kHz, 7100-7150 kHz (7050-7075 kHz when the terrestrial location of the station is not within Region 2), 21,100-21,200 kHz, and 28,100-28,200 kHz.

* * * * *

2. In §97.61, the headnote, paragraphs (a) and (c) and sub-paragraphs (b)(11) and (b)(13) are amended to read as follows:

§97.61 *Authorized frequencies and bandwidth.*

(a) Following are the frequency bands and associated bandwidth available to amateur radio stations, other than repeater stations, subject to the limitations stated in paragraph (b) of this section, §§97.65, 97.109, and 97.110.

Freq. band	Max. auth. bdwdth (kHz)	Limitations (see par. b)
kHz		
1800-2000	3.5	1,2
3500-3775	0.35	-----
3775-4000	3.5	4
4383.8	3.5	13
7000-7150	0.35	3,4
7075-7100	3.5	11
7150-7300	3.5	3,4
14000-14200	0.35	-----
14200-14350	3.5	-----
MHz		
21.000-21.250	0.35	-----
21.250-21.450	3.5	-----
28.000-28.500	0.35	-----
28.500-29.700	35.0	-----
50.000-50.100	0.35	-----
50.100-54.000	35.0	-----
144.0-144.1	0.35	-----
144.0-148.0	35.0	-----
220-225	35.0	5,6
420-450	35.0	5,7
GHz		
1.215-1.300	-----	5
2.300-2.450	-----	5,8
3.300-3.500	-----	5,12
5.650-5.925	-----	5,9
10.000-10.500	-----	5
24.000-24.250	-----	5,10
48.000-50.000	-----	-----
71.000-76.000	-----	-----
165.00-170.00	-----	-----
240.00-250.00	-----	-----
Above 300.00	-----	-----

(b)(11) The use of an authorized bandwidth in excess of 0.35 kHz in this band is limited to amateur radio stations located outside Region 2.

* * * * *

(b)(13) The frequency 4383.8 kHz, telephony using single sideband amplitude modulation with reduced or suppressed carrier, maximum power of 150 Watts, may be used by any station authorized under this part to communicate with any other station authorized in the State of Alaska for emergency communications. No airborne operations will be permitted on this frequency. Additionally, all stations operating on this frequency must be located in or within 50 nautical miles of the State of Alaska.

(c) The following transmitting frequency bands and the associated bandwidths authorized in paragraph (a) of this section are available for repeater stations, including both input (receiving) and output (transmitting):

FREQUENCY BAND (MHz)
29.5-20.7
52.0-54.0
146.0-148.0
222.0-225.0
442.0-450.0
any amateur frequency above 1,215 GHz.

3. In §97.65 the headnote, (a) and (b) are amended, and (c), (d), (e) and (f) are deleted

to read as follows:

§97.65 *Bandwidth of emissions.*

(a) Occupied bandwidth is the frequency bandwidth such that, below its lower and above its upper frequency limits, the mean powers radiated are each equal to 0.5 percent of the total mean power radiated by a given emission.

(b) The authorized bandwidth is the maximum occupied bandwidth authorized to be used by a station.

§97.69 [deleted]

4. §97.69 is deleted.

5. In §97.73, the headnote and text is amended to read as follows:

§97.73 *Purity of emissions.*

The mean power of emissions on any frequency removed from the upper or lower limit of the authorized bandwidth, by more than 250 percent of the authorized bandwidth, shall be attenuated at least 40 decibels below the peak output power of the transmitter.

6. In §97.87, paragraph (h) is amended to read as follows:

§97.87 *Station identification.*

* * * * *

(h) The identification required by paragraphs (a), (b), (c), (d) of this section shall be given on each frequency being utilized for transmission and shall be transmitted either by telegraphy using the international Morse code, or by unencoded telephony, using the English language. If an automatic device is used for identification by telegraphy, the code speed shall not exceed 20 words per minute. The use of a national or internationally recognized standard phonetic alphabet as an aid for correct telephone identification is encouraged.

7. §97.93 is amended to read as follows:

§97.93 *Modulation of carrier.*

Except for brief tests or adjustments, and authorized remote control or experimental purposes, an Amateur station shall not transmit an unmodulated carrier on frequencies below 51.0 MHz.

Before the
FEDERAL COMMUNICATIONS COMMISSION
Washington, D.C. 20554
FCC 76-348
40050

In the Matter of

Amendment of Part 97 to make special callsigns available to stations licensed to Amateur Extra Class operators.
Docket 20092

FIRST REPORT AND ORDER
Adopted: April 14, 1976

By the Commission:

1. A Notice of Proposed Rule Making in the above captioned matter was released on July 2, 1974, and published in the Federal Register on July 8, 1974 (39FR24922). In that Notice, the Commission proposed to amend Part 97 of the Rules and Regulations to permit an Amateur Extra Class licensee to request specific unassigned callsigns for his primary and/or additional stations. It was also proposed to discontinue the availability of "in memoriam" callsigns, i.e., callsigns requested by Amateur club stations for the purpose of honoring a deceased member.

2. In this First Report and Order, we will address only the issues of 1X2 (i.e., so called two letter) callsigns and "in memoriam" callsigns. We will defer consideration of 1X3 and 2X3 callsigns to a later Report and Order. The recent tremendous influx of Citizens Radio Service applications at our Gettysburg, Pa., licensing facility precludes the implementation of any changes in the Amateur callsign structure which would require significant additional manpower or changes in the computer software systems. Because the number of available 1X2 callsigns is small, we believe the changes adopted herein will not impose an undue processing burden, and the manpower released from the processing of "in memoriam" callsigns can be used in this effort.

3. Approximately 150 comments were received by the Commission in this matter, and all were carefully considered. The overwhelming majority of the comments supported our proposal regarding choice of specific callsigns by Amateur Extra Class licensees. The comments were divided approximately equally between those who wished to retain a specific time period before becoming eligible for a 1X2 callsign, and those who desired to completely delete the waiting period. One of the most frequently raised objections was that the proposal would permit Amateur Extra Class operators who had been licensed only a short time to obtain 1X2 callsigns. (1X2 callsigns are presently issued to Amateur Extra Class operators who submit evidence that they held an amateur license at least 25 years prior to the date of application.) In the words of the American Radio Relay League (ARRL), "Two letter (1X2) callsigns traditionally have identified the holder as an 'old timer,' one who has devoted many years of dedicated public service as an amateur. To make two letter calls available to any Amateur Extra Class licensee irrespective of years of service would have the practical effect of downgrading the stature of present two letter callsign holders."

4. Those supporting our proposal without qualification cited the incentive a 1X2 callsign would provide. Comments suggested that the special significance of a 1X2 callsign would encourage many amateurs to upgrade their license class and thereby increase their overall technical and operational pro-

ficiency. Other comments indicated that longevity is not always an indication of a proficient operator with much public service, and therefore is not a valid criterion to use for the assignment of a 1X2 callsign.

5. We believe that the arguments for retaining a large measure of tenure associated with 1X2 callsigns have limited merit. Traditionally, 1X2 callsigns have been available only to those persons who have been long-term amateurs. Such callsigns, because they are in very short supply, must necessarily be rationed in some manner, and it has seemed the fairest procedure to allot them consistent with some measure of longevity. However, we also believe that once the "old timers" have had an adequate opportunity to obtain 1X2 callsigns, whatever such callsigns remain should be made available progressively to more recent licensees.

6. Accordingly, we have determined to phase out the tenure requirement in the following manner: All present Amateur Extra Class holders of 1X2 callsigns will be given an exclusive 3 month period to request a different specific 1X2 callsign. During this period, we will also accept applications for specific 1X2 callsigns from Amateur Extra Class licensees who were first licensed at least 25 years ago and who do not now hold 1X2 callsigns. At the end of this period, we will then also begin accepting applications for specific 1X2 callsigns from Amateur Extra Class licensees who first obtained that class of license prior to November 22, 1967 (the effective date of Docket 15928). Such applications will be accepted for a period of 3 months, at which time we will then also begin accepting applications from Amateur Extra Class licensees who first obtained that class of license prior to July 2, 1974 (the release date of Docket 20092). Such applications will be accepted for a period of 3 months, at which time we will then also begin accepting applications from Amateur Extra Class licensees who first obtained that class of license prior to July 1, 1976 (the effective date of Docket 20092). Such applications will be accepted for a period of 3 months, at which time we will then also begin accepting applications from any Amateur Extra Class licensee.

7. Many comments expressing agreement with our proposal also expressed concern over the administrative problems which could arise in implementing a working system. Inevitably, a single callsign will be requested by more than one applicant, and there are essentially two ways to handle such situations: 1) on the basis of which of the amateurs has been licensed the longest (or the earliest); or 2) on the basis of which request was received first for processing. Considering the manpower available for handling application processing, we have no alternative but to adopt the latter approach. To do otherwise would tremendously delay the processing of all amateur applications, Amateur Extra Class and others. Moreover, because we will permit an applicant to request several callsigns in order of preference, there should be few instances where an applicant cannot get a callsign of his choice, although it may not have been his first choice. All applications for specific 1X2 callsigns should be filed on a Form 610, with an attachment listing the callsigns desired, in order of preference, and should be sent to the FCC offices in Gettysburg, Pennsylvania. The filing fee is $28 if no renewal is desired, and $29 if renewal is desired.

8. We are adopting an effective date well beyond the release date of this Report and Order, and we will not accept prematurely filed applications. This will insure that the news of this rule making will reach most amateurs so that they will have sufficient time to gather the necessary information and application forms required. We recommend that requests for verification of past records and license dates not be directed to the Commission. Amateurs may seek licensing information in Commission files at our Washington, D.C., offices, or they may request such information via our duplication contractor. Requests for such information made to the Commission will be honored. However, because of staff limitations and other priorities, such requests are not likely to receive immediate attention and could be delayed, thereby causing a loss of position in the filing sequence. Additionally, to insure that applicants requesting 1X2 callsigns fully comply with the requirements for licensing background documentation, we would like to clarify exactly what must be submitted. An applicant may submit either an original license, a photocopy of an original license, or a photocopy of a recognized listing or source, such as the Radio Amateur's *Callbook*. When such a source is used, the applicant should include a photocopy of the title page of the source which indicates its title, and dates of coverage. We cannot accept affidavits or sworn statements from applicants, since they cannot be verified.

9. As proposed, we are deleting the availability of "in memoriam" callsigns. Less than a dozen comments directly addressed our proposal to delete the availability of such callsigns, indicating a general lack of interest among the many commentors. Arguments stated that since there were a relatively small number of requests, the additional manpower and 1X2 letter callsigns which would be gained from the deletion would be minimal. While we realize the "in memoriam" station may indeed be a tribute to a deceased amateur, we have found instances of abuses of such callsigns. In our Notice of Proposed Rule Making, we cited the difficulty in many instances of determining whether or not the evidence of the deceased's membership in the applicant club is valid. While most comments agreed that the burden of proof should lie with the applicant, no comment indicated a valid and

conclusive method of verifying the submitted evidence. Additionally, it is seldom, if ever, that a non-1X2 callsign is requested, although many more 1X3 and 2X3 callsigns have been issued to the Amateur population as a whole. It appears that, in some instances, the objective of the club to honor a deceased member is secondary to obtaining his prestigous 1X2 callsign for club use. We will therefore issue no such callsigns henceforth, but will continue to renew those now outstanding.

10. In view of the foregoing considerations, we find that the amendments to Part 97, set forth in the attached Appendix, are in the public interest, convenience, and necessity. The authority for such amendments is contained in Sections 4(i) and 302 and 303 of the Communications Act of 1934, as amended.

11. Accordingly, IT IS ORDERED, that effective July 1, 1976, Part 97 of the Commission's Rules and Regulations IS AMENDED as set forth in the attached Appendix.

FEDERAL COMMUNICATIONS COMMISSION
Vincent J. Mullins
Secretary

APPENDIX

Part 97 of Chapter I of Title 47 of the Code of Federal Regulations is amended as follows:

1. Rule Section 97.51(a) is amended to read as follows:

§97.51 Assignment of callsigns.

(a) * * *

(1) A specific unassigned callsign may be reassigned to a previous holder thereof.

(2) A specific unassigned callsign may be temporarily assigned to a special event station.

(3) One unassigned 1X2 callsign (a callsign having one letter, then the numeral, followed by two letters), may be assigned to the station of a previous holder of a 1X2 callsign.

(4) One specific unassigned 1X2 callsign may be assigned to the station of an Amateur Extra Class licensee who previously held or presently holds a 1X2 callsign.

(5) One specific unassigned 1X2 callsign may be assigned to the station of an Amateur Extra Class licensee who submits evidence that he held any amateur radio operator or station license, issued by any agency of the U.S. Government or by any foreign government, 25 or more years prior to the receipt date of an application for such assignment.

(6) Effective October 1, 1976, one specific unassigned 1X2 callsign may be assigned to the station of an Amateur Extra Class licensee who submits evidence that he first held that class of license prior to November 22, 1967.

(7) Effective January 1, 1977, one specific unassigned 1X2 callsign may be assigned to the station of an Amateur Extra Class licensee who submits evidence that he first held that class of license prior to July 2, 1974.

(8) Effective April 1, 1977, one specific unassigned 1X2 callsign may be assigned to the station of an Amateur Extra Class licensee who submits evidence that he first held that class of license prior to July 1, 1976.

(9) Effective July 1, 1977, one specific unassigned 1X2 callsign may be assigned to the station of any Amateur Extra Class licensee.

(10) The provisions of paragraphs (3) through (9) of this Section shall also apply to the issuance of 2X2 callsigns in Alaska, Hawaii, and U.S. possessions.

(b) * * *

2. Rule Section 97.53 is amended to read as follows:

§97.53 Policies and procedures applicable to assignment of callsigns.

(a) * * *

(1) 1X2 callsigns — callsigns with a single letter prefix and two letter suffix, e.g., W6AB, and 2X2 callsigns in Alaska, Hawaii, and U.S. possessions.

(2) 1X3 callsigns — callsigns with a single letter prefix and a three letter suffix, e.g., W6ABC.

(b) An eligible licensee will be permitted to hold only one 1X2 callsign. However, a licensee who, by reason of former rule provisions, presently holds more than one such callsign, may continue to hold those same callsigns in the same callsign areas.

(c) In those instances where an applicant is not eligible for a specific callsign, a 1X2 callsign beginning with the letter "W" will, subject to availability, normally be assigned to an eligible licensee.

* * * * *

(g) Subject to availability, a primary station will be issued the same type of callsign as the one relinquished upon modification of license to show a station location in a different callsign area.

(h) Except as provided in Section 97.51(a), licensees will not be assigned specific callsigns or counterpart callsigns (callsigns with identical suffix letters).

(i) Those Amateur Extra Class licensees eligible under the provisions of Section 97.51(a) for a specific unassigned 1X2 callsign may specify in their applications more than one callsign in order of preference. In those instances where none of the listed callsigns are available, the application will be returned without action unless the licensee has stated that he will accept, as a last choice, any unassigned 1X2 callsign.

(j) Callsigns which have been unassigned for more than one year are normally available for reassignment.

73 READER SERVICE

Circle appropriate Reader Service # for desired company brochures, data sheets or catalogs and mail in to 73. Include your zip code, please. Send money directly to advertisers. * Reader Service inquiries not honored. *LIMIT: 25 requests.*

ADVERTISER INDEX

☐ *NEWSSTAND* ☐ *SUBSCRIPTION*

READER SERVICE
73 Inc., Peterborough NH 03458
AUGUST 1976

Please print or type.

Name ______________________ Call ________

Address ______________________

City ______________________

State ______________________ Zip ________

Coupon expires in 60 days . . .

propagation

by
J. H. Nelson

EASTERN UNITED STATES TO:

GMT:	00	02	04	06	08	10	12	14	16	18	20	22
ALASKA	7A	7	7	7	7	7	7	7	7	7	7	7A
ARGENTINA	14	7A	7	7	7	7	7A	14	14	14	14A	14
AUSTRALIA	14	7A	7B	7B	7	7	7	7	7	7	14	14
CANAL ZONE	14	7	7	7	7	7	7	14	14	14	14	14
ENGLAND	7	7	7	7	7	7	7A	14	14	14	14	7A
HAWAII	14	14	7B	7	7	7	7	7B	7A	14	14	14
INDIA	7	7	7	7	7B	7B	7	7	7A	14	7A	7
JAPAN	14	7A	7	7	7	7	7	7	7	7	7	14
MEXICO	14	7	7	7	7	7	7	7A	14	14	14	14
PHILIPPINES	14	7A	7B	7B	7B	7B	7B	7	7	7	7B	14
PUERTO RICO	7A	7	7	7	3A	3A	7	7	7	14	14	14
SOUTH AFRICA	7	7	3A	7	7B	7A	14	14	14	14	14	7
U.S.S.R.	7	7	7	7	7	7	7A	14	14	14	14	7
WEST COAST	14	7A	7	7	7	7	7	7A	14	14	14	14

CENTRAL UNITED STATES TO:

GMT:	00	02	04	06	08	10	12	14	16	18	20	22
ALASKA	7A	7A	7	7	7	7	7	7	7	7	7	7
ARGENTINA	14	14	7	7	7	7	7	14	14	14	14	14
AUSTRALIA	14	14	7B	7B	7	7	7	7	7	7	14	14
CANAL ZONE	14	7A	7	7	7	7	7	14	14	14	14	14
ENGLAND	7	7	7	7	7	7	7	7	14	14	14	14B
HAWAII	14	14	7A	7	7	7	7	7	7A	14	14	14
INDIA	7	7	7	7	7B	7B	7B	7	7A	7A	7	7
JAPAN	14	14	7	7	7	7	7	7	7	7	7	14
MEXICO	14	7	7	7	3A	3A	3A	7	7	7	14	14
PHILIPPINES	14	14	7B	7B	7B	7B	7	7	7	7	7B	14
PUERTO RICO	14	7A	7	7	7	7	7	7A	14	14	14	14
SOUTH AFRICA	7	7	3A	7	7B	7B	14	14	14	14	14	7
U.S.S.R.	7	7	7	7	7	7	7	7	7A	14	14	7

WESTERN UNITED STATES TO:

GMT:	00	02	04	06	08	10	12	14	16	18	20	22
ALASKA	7A	7A	7	7	7	7	7	7	7	7	7	7
ARGENTINA	14	14	7	7	7	7	7	7A	14	14	14	14
AUSTRALIA	14	14A	14	7A	7	7	7	7	7	7	14	14
CANAL ZONE	14	14	7	7	7	7	7	7	14	14	14	14
ENGLAND	7	7	7	7	7	7	7	7	7	7A	14	14B
HAWAII	14	14A	14	14	7	7	7	7	7A	14	14	14
INDIA	7A	14	14	7	7B	7B	7	7	7A	7A	7	7
JAPAN	14	14	14	7	7	7	7	7	7	7	7A	14
MEXICO	14	14	7	7	7	7	7	7	14	14	14	14
PHILIPPINES	14	14	14	7B	7B	7B	7	7	7	7	7B	14
PUERTO RICO	14	7A	7	7	7	7	7	7A	14	14	14	14
SOUTH AFRICA	7	7	3A	7	7B	7B	7B	7B	14	14	14	7
U.S.S.R.	7	7	7	7	7	7	7	7	14	14	7	7
EAST COAST	14	7A	7	7	7	7	7	7A	14	14	14	14

A = Next higher frequency also may be useful
B = Difficult circuit this period
N = Normal
U = Unsettled
D = Disturbed

1976			AUGUST			1976
SUN	MON	TUE	WED	THU	FRI	SAT
1 U	2 U	3 U	4 N	5 N	6 N	7 N
8 U	9 D	10 D	11 U	12 U	13 D	14 U
15 N	16 N	17 N	18 N	19 D	20 D	21 U.
22 U	23 N	24 N	25 D	26 D	27 N	28 N
29 N	30 U	31 U				

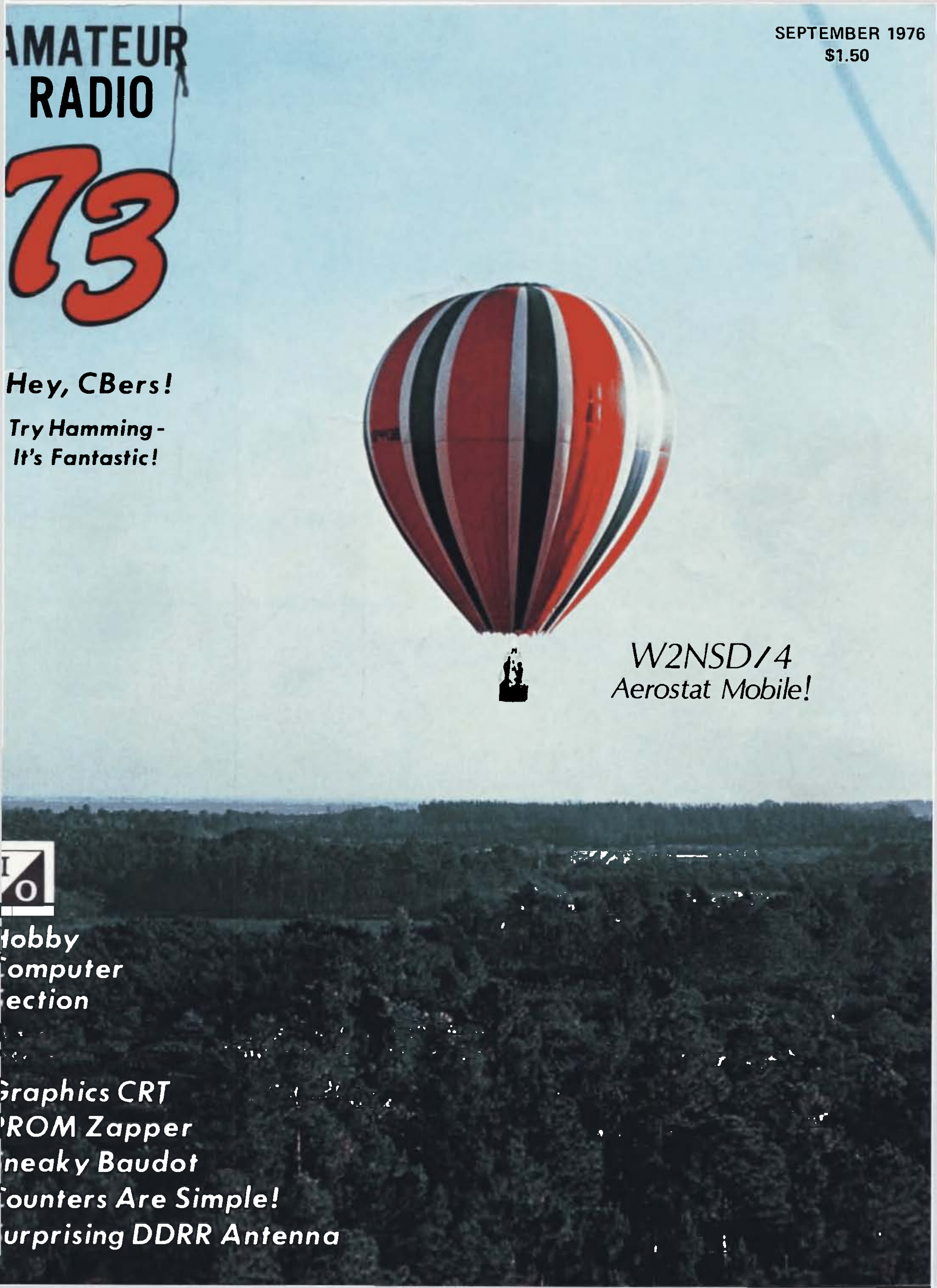
MATEUR
RADIO
73
SEPTEMBER 1976
$1.50
Hey, CBers!
Try Hamming -
It's Fantastic!
W2NSD/4
Aerostat Mobile!
I
O
obby
omputer
ection
raphics CRT
ROM Zapper
neaky Baudot
ounters Are Simple!
urprising DDRR Antenna

73

#191 SEPT 1976

COVER: Up, up and away (article begins on page 20). Photo by Sherry Smythe.

73 Magazine is published monthly by 73, Inc., Peterborough NH 03458. Subscription rates are $10 for one year worldwide, and $20 for three years. Second class postage paid at Peterborough NH 03458 and at additional mailing offices. Phone: 603-924-3873. Microfilm edition — University Microfilms, Ann Arbor MI 48106. Tapes — Science for the Blind, 332 Rock Hill Rd, Bala Cynwyd PA 19904.

INCLUDE OLD ADDRESS AND ZIP CODE WITH ADDRESS CHANGE NOTIFICATION.

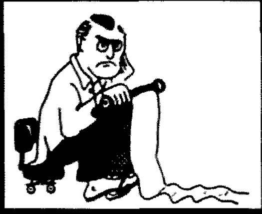

NEVER SAY DIE

...de W2NSD/1

EDITORIAL BY WAYNE GREEN

WAYNE AT ATLANTA

About 15 minutes before the time scheduled for my talk, the small room was packed and the hall outside jammed in both directions. The talk was moved to the banquet room. It was estimated that about 350-400 sat in on it. I talked for over an hour and never once at any time mentioned the ARRL! That's not a new record . . . it's just that the League knows some of the things I *could* say and they are willing to suffer a lot of abuse from members to try to prevent that. I say bravo to the Atlanta HamFestival committee for getting me on the program. I think most everyone present had a good time during my talk.

The hamfest came off very well . . . quite an improvement from my last visit there a couple of years ago. I say three cheers for Chaz Cone and the committee for a splendid job. I didn't hear a single beef from anyone about their management.

Atlanta is well worth a visit, even from afar. It is a spectacle . . . and their amusement center, Underground Atlanta, is a lot of fun, too. The big ham dealers came in from all over . . . including a trailerload of ham gear brought down by Chuck Martin of Tufts Radio. The only sour note there was the theft of a Standard HT from the Tufts booth.

Watch out, Dayton!

FAST SHUFFLE FROM THE FCC

It's odd how long it takes the FCC to get around to acting on our petitions and how fast they seem to go on their own . . . weird. Like the recent 20777 bandwidth deal where the deadline for comments to be filed was way before there was any way for me to get the docket printed in *73* and out where you could read about it.

SOME THOUGHTS ON BANDWIDTH

Perhaps it was not by design that the FCC set its deadline for comments on the bandwidth docket at such an early date that little amateur dialogue was possible . . . and thus little opportunity for amateurs to help each other understand the ramifications of this docket . . . or to react intelligently to it. Though all of us are at times frustrated by the incredible amounts of time it takes for the FCC to react to our needs, it does seem as if certain functions, such as the time really needed for amateurs to develop a good reasoned response to a docket, are set too tightly. If the FCC wants to cut us out of the picture as far as our own rules are concerned, this is the way to do it.

I snapped in a petition to extend the deadlines so amateurs would at least have a chance to get their opinions in if they wanted to. They stretched out the comment period a couple of months, so you can put in your say. Read the thing over (see *73*, August, 1976, page 160), think about it a lot, and talk it over with your friends on the air . . . and then be sure you drop Uncle Charlie a note.

A few readers have asked me what I think about the docket and, though it may surprise you, I am not wholly without any opinions on the matter.

Now, to get down to some brass tacks on the bandwidth thing. The hot and heavy breath of the old-time CW operator seems to be at work here. I wonder what would have happened to CW if the Novice Class license hadn't been thought up? I also wonder if there is any real justification for the Novice ticket. I wrote a bit about that recently . . . expressing my idea that the Novice license is a cul-de-sac . . . and that it has effectively discouraged more people from continuing as radio amateurs than it has helped.

To repeat briefly . . . a Novice license encourages amateurs to try to learn Morse Code by the worst possible way . . . by gradually speeding up copy. This is fiendish . . . it drags out the learning process by many hours and makes it pathetically difficult to master . . . particularly that 10 wpm hump, which kills off so many who come up against it.

If you start right out learning the sound of each character at 13 wpm, then you never go through that misery of first *translating* each letter . . . then learning to translate them faster and faster . . . until you reach the operating speed of the brain . . . the 10 wpm hump . . . at which time you finally have to do what you should have in the beginning, learn automatic copy of the characters. Well, enough of that . . . it is the basis of the *73* code cassette course and why people using it are able to learn code so quickly. The ARRL code tapes use the time-dishonored slow method and drive people crazy.

If we didn't have the Novice license how much CW would we have in our ham bands? Once you remove the Novices and traffic nets, how much CW do you have? Not a lot . . . and this is why some of the phone ops have for some time been trying to get across the idea of re-allocating the phone/CW bands a bit.

With the rapid development of television typewriters, I shall be surprised if we don't begin to find RTTY growing substantially on our bands. And with microcomputers to help the RTTY systems, they should get to be very flexible. Since we expect this growth, we should give some thought now to what bandwidths are needed and how much of the band these systems will use.

The old standard of 850 Hz frequency shift, 60 wpm, Baudot (7-level) is on its way out. 170 Hz shift and 100 wpm at 7-level is more popular. And what is the bandwidth of a signal shifting 170 Hz and modulated by a 70 baud signal? (590 Hz, minimum.) Remember that you have to allow for at least third order harmonics if the square waves are to be received . . . possibly 5th order. Or should we go right away to ASCII (11-level) code? Since this is the way most modern equipment works, and we will need clumsy converters to use Baudot, ASCII is difficult to fight. ASCII at 100 wpm is 110 baud (830 Hz).

But why should we stay with 100 words per minute? Most information transfer is now happening at 300 baud or better. I suggest that the practical limit for information exchange is the reading speed of the receiving operator. There will be little use in transferring information at a much faster speed than it can be read for normal radio contacts. Perhaps we should consider this speed as our desired rate of information exchange.

Of course, there might be cases where you would want to send the information at a much higher speed . . . with a wider bandwidth . . . and then leave the transmitter off the air while the material is being read. In this way info could be sent in brief bursts. What we would lose in wider bandwidths, we would gain in time available for transmission.

I view the docket as a transparent device for banning AM from the low bands and ATV from 420 MHz, neither of which seems like a good move to me. If you've read my editorials for very long, you know that there are few amateurs who are less in favor of AM on the low bands. I've been the enemy of the AM kilowatt since sideband appeared in the early 50s. But I don't like to kill off

everything that would get the axe along with AM by making the rules to kill AM. I firmly believe that amateurs should have the freedom to experiment and pioneer new modes and techniques, so if there is not an awfully good reason for setting limits on experimentation, I think they should be left open.

Just to perhaps enter a slight doubt in the minds of those who are so emotionally upset by AM that they are quite willing to throw out the baby with the bath water (to coin a phrase), let's suppose that some group started working again with double sideband suppressed carrier systems, complete with a relatively simple IC synchronized receiver detector. Suppose this system was demonstrated to enable amateurs to operate on phone with very little interference as close as 500 Hz, thus permitting about seven times as many contacts to take place in a given band as with SSB? Would you want to throw this out just to get rid of a tiny handful of old buzzards who are making trouble on 75m with bad language and arrogant behavior? This is one of the biggest problems with the proposed bandwidth docket.

Do we want to force most RTTY and SSTV to occupy the crowded phone bands while much of the CW channels are going begging? In view of the coming interest in microcomputer-assisted RTTY and SSTV, which could be the biggest interest ever in amateur radio ... even bigger than FM and repeaters ... we might be painting ourselves into a corner (to coin another phrase).

Any precipitous rush into a bandwidth plan for the amateur bands will only give us that much more that we have to undo later on. It seems to me that before we can make any intelligent decisions on such matters we need to open up amateur dialogue about how much of the sub bands we want for CW, how much for phone, how much for other modes such as RTTY, SSTV, FAX, and the coming things which amateurs are pioneering these days.

It has been suggested that perhaps a bandwidth ruling would not be the best solution to the need for room for more modes ... that perhaps it is getting time to pay more than lip service to de-regulation and consider taking off the restrictions to pioneering. We could just open the ham bands in the U.S. as they are in many other countries ... any mode, anywhere. Then we could set up agreements among ourselves if we want to reserve some frequencies for CW DXing ... CW rag chewing ... CW traffic nets. We were able to do this with FM and repeaters on two meters ... without any help from the ARRL or FCC. (The recent attempts by the League to take over FM and repeaters have been rejected by a great many regional repeater groups.)

SELF-POLICING?

One of the aspects of amateur radio which has gotten a lot of lip service from the FCC — and little recognition other than that — has been the self-policing function.

You want proof? Amateurs with any memories at all will recall that much of the activity of the FCC with regard to amateur radio has been in issuing pink slips. If the FCC had contacted the ham magazines and asked them to pass along the word that they would prefer that amateurs do thus and so, amateurs would have gladly done what was expected. But instead, suddenly there is a rash of pink slips for not announcing the call area when mobile. That's how we found out about the FCC wanting that. Phooey.

If you want a child to act like a child, treat him like a child. If you want him to accept responsibility and act more grown up, just treat him accordingly. The same thing holds for amateur radio. I think we can, for the most part, be reasonably adult if we are given the opportunity. If the FCC will give us responsibility, I think we can handle it.

We don't need to go crying to the FCC every time we have a problem. When over-enthusiastic CBers take a turn at trying to use the 10m spot on their dial, we need to let them know immediately that this is a great big no-no. It won't hurt to get the name, address, and as much other data on the offender as possible, complete with some tapes in case you and your fellow local amateurs fail ... but you should exhaust every avenue of approach to the problem before crying to the FCC.

CAN AMATEURS ACCEPT RESPONSIBILITY?

We have a lot of nerds in our ranks, I agree. But thank heavens the percentage is miniscule. It is just possible, if you and I assert ourselves, that we can keep things running smoothly.

As proof that we can, we only have to look back at the development of FM repeaters less than 10 years ago. The early days of repeaters were rife with repeater wars and a lot of very bad things that most of the pioneers would prefer to forget. There was little standardization of repeater channels. It was a mess. With the help of a lot of articles in *73*, the *Repeater Bulletin*, and a series of Repeater Symposiums, the field was brought together and repeater groups formed into repeater councils, committees set up to coordinate frequencies and a national agreement made on channels and standards.

By the time the FCC came out with repeater regulations, amateurs had already solved their problems and two meter FM was virtually troublefree. The repeater rules were so far out of line with what was needed that amateurs reacted strongly. The January, 1974, hearing before the FCC, the first of its kind in history, allowed amateurs from all over the country to speak directly to the FCC Commissioners and tell them that we were being over-regulated. This hearing had a tremendous impact on the FCC and particularly on John Wiley, who was soon to become the Chairman of the Commission.

Wiley felt that the FCC would rule better by ruling less, but he needed a group to use as a demonstration of what could be done. When amateurs went to the trouble to come in and tell the FCC they wanted less regulation, it was at a very fortunate time ... here was just what the FCC needed to show what could be done.

If I may put in a bad word here about the ARRL ... they opposed the hearing and refused to participate in it. I moderated the hearing. After the hearing a League lawyer took us out to lunch and explained that we were naive about how things are done in Washington. Maybe.

Okay, so we did a good job of getting FM organized and working, all without any help from the FCC at all. Does this mean that we can handle our low bands? Frankly, I don't know. FM, by virtue of its short distances, perhaps put more peer pressure on big egos and tantrum throwers than might be possible on 40m. We could be getting into a lot of trouble ... but I think it is worth the gamble. With the support of the ham magazines I think amateurs can go from the small amount of self-policing they have today to almost total self-policing.

Try this on for size ... suppose we throw out docket 20777 entirely and all mode restrictions. This would mean that legally we would no longer have CW bands or phone bands, just ham bands. It would be up to us to set "gentlemen's agreements" on frequency use. I think we could do it. Before you disagree with me, and I know you will, remember back to the beginnings of SSB. There we had an agreement which put SSB stations on the top end of the 20m phone band. Sure, we had a few bad guys who broke the agreement, but 99% of the operators lived by it and it worked. Only the demise of AM ended the agreement.

And don't forget the monumental set of agreements which were put together to allow FM and repeaters to work!

CONSTITUTIONAL CONVENTION

We need cooperation between ham magazines ... something that has been sadly missing in the past. I've tried many times to get something going, but the fear of Wayne Green is so strong at ARRL that I sometimes think they would sacrifice the whole hobby rather than cooperate. I shall keep trying. I shan't try to be Mr. Nice Guy with them ... I couldn't be that deceitful. But hopefully our goals are similar ... the betterment of amateur radio. I get a bit depressed when I see what the League has brought about, such as Incentive Licensing, the greatest fiasco in the history of the hobby ... their refusal to accept transistors for years, their refusal to accept FM and repeaters until recently ... etc.

Hopefully the past is the past and all that bad stuff that has been done can be put aside and we can all work toward a better tomorrow. I'd like to see a national convention of amateurs about every two years where delegates from ham clubs can get together for about a week and change our self-made rules. Committees could be set up as at the ITU in Geneva. The committees would then report their recommendations to the whole convention and a vote would be taken on all rule changes. Amateurs would then live by the new rules until the next convention.

I'd like to see ARRL get into something like this. I sure don't want to have to splinter myself further by trying to organize it or trying to start a new club which could do something like this. I have my hands full trying to run *73*, fighting my little battles with government agencies and phone companies, messing with computers, putting out books, and even getting on the air now and then! I also get out to conventions and hamfests ... a little DXpeditioning ... visits to advertisers ... it keeps me busy, if not out of trouble.

Let's see ... I was writing about bandwidth ... frankly, I'd like to see the lid taken off for a year for a test of our maturity. If we could hack it, I think it would allow the widest possible latitude for pioneering ... and, like it or not, that is one of the ways we pay the freight.

Speaking of pioneering ... every time I've devoted an inordinate part of the magazine to something new as a way of encouraging pioneering in that field, I've had flack from reactionaries. Yes, I know that most hams just sit there and rag chew and don't want to know nothin' about computers. Well, you tell them that it is pioneers and emergency operations that keep them in rag chewing frequencies and that not only shouldn't they sit there and bitch about it, they should darned well see that any magazine which is in there helping them hold onto their hobby is supported to the fullest ... even if they are too lazy to sit down and educate themselves on new techniques. Okay?

Actually, I've had very little griping about I/O ... but I know darned well that a lot of old curmudgeons are out there grumbling ... they think it is clever to try to tear things down and be destructive. They're too dumb to make any creative contributions to amateur radio ... etc.

Every time I get on the air I thank heaven for the amateurs who get out there and do things ... the ones who are the spark plugs for field day outings ... for contests ... who run ham clubs ... who set up training classes for new hams ... who set up and run repeaters ... who build new circuits and then write 'em up for one of the ham magazines ... who see to it that nets meet and work ... who handle traffic ... who are there when an emergency comes and keep at it until all is clear ... who try new

Continued on page 136

be my guest

visiting views from around the world

Thoughts from the Bull-etin Board

Every school age kid is well aware of the industrial revolution and how it affected our country's growth in the late 1800's. The microprocessor revolution seems to be upon us and it looks like it might last for a while. Motorola believes that the microprocessor revolution has only started. They predict that the total effect will continue to be felt for 200 years. Microprocessors reduce costs to a level which allows them to be used in applications never before considered economically practical.

A quartz crystal watch with LED or liquid crystal display (LCD) is a small version of the microcomputer. They are programmed at the integrated circuit (IC chip) manufacturer's plant rather than being programmed by a person sitting at a keyboard with a CRT display. Some of the more expensive quartz watches are programmed to fit a four year cycle. That is, they are aware of the day of the month, including February, but they automatically take care of leap year when February has 29 days. Then the watch resets itself and it is good for another four years. During that time, the watch has kept track of the fact that it has counted 4 times 10 to the 12th cycles of the quartz crystal. But just once every four years the circuit is activated so that it counts and displays the time for 29 February! A quartz watch on the wrist is actually more accurate and stable than the broadcast band AM transmitters, a BC transmitter being allowed 20 hertz drift (2 parts in 10 to minus 5th) while the quartz watch has an accuracy of 2 parts in 10 to minus 6th. An added benefit of the LED display is that it can be used to locate keyholes in the dark!

As research continues in the area of the light emitting diode (a truly solid state lamp or light source), they shed more light. I recently received a green LED from Siemens (type LC-57-D) which is able to put out 30 millicandelas at a current of ten milliamperes. When they first came out a few years ago, they put out about .5 millicandelas at 20 mils of current. At a rated 60 mils of current, the green LED is bright enough to cast a cone of light like a prefocussed flashlight bulb. And green is at the maximum of the human eye so it appears much brighter. The red LED has maximum output at a frequency where the response of the eye is only 10% of that at green.

Have you thought about what effects a local lightning storm might have on your solid state electronic devices? Consider this. During a lightning storm, voltages in excess of ten million volts and currents of thousands of Amperes are generated and discharged from cloud to cloud and from cloud to ground. It is at these times that diodes, transistors, and triacs may fail even though the electronic device may not even be turned on. There is not yet much in the technical literature on the subject of lightning-induced electronic failures, but it may well be a design consideration of the future. There has been some data however, in the current issue of *The Electronic Technician* and the *RCA Transistor Manual*. It seems that power line-induced voltage transients may cause transients in the solid state power supply and take out the diodes associated with the power supply. Several instances reported to me concern a sewing machine and a tape recorder. After the last lightning storm (of which there were many in San Antonio in April '76), the sewing machine would operate only at full speed and not operate at variable speeds as before. Either a diode or triac in the speed control circuits has had its operating voltage exceeded. And thinking back, I noticed that my Radio Shack Timekube (5, 10, 15 MHz) receiver would no longer function. And it is battery operated (9 volts) but I was using an outdoor antenna lying on the ground (an exhausted beverage longwire). I noticed later that if I turned the audio way up and listened closely, I could still hear WWV very weakly. That meant that the transistor in the front end had gone out during one of the recent storms. So go back in your memory to see if your electronic device didn't fail after a lightning storm (even though you may not have noticed it till many days later). Seems like a good article for some electronic magazine!

Cal Graf W5LFM
San Antonio Radio Club
Bull-etin

Touching Minds

Peculiar to amateur radio is its concern with direct and instant communication among people, near and far, of whatever nationality and race. Flying, diving, philately, mountain-climbing and many other hobbies are essentially adventures of private experience, but ours turns on mutual disclosure.

What we have achieved in this free commerce of ideas has not brought peace to the world, but remember that for perhaps only one tenth of one per cent of the time passed since man was a rootless nomad have we known the miracle of wireless contact — international exchange without intermediaries. We have just begun. It was only minutes ago that fires along the hilltops served to signal the approach of an armed host, and that was a top priority message.

Today our technology is a fascinating maze, continually branching in new directions, but still the ultimate goal is to touch another mind, and it always will be. CW or phone, teletype or ATV, even computers — these are but means and the end is communication for the progress of human affairs.

Ken Cole W7IDF
Vashon WA 98070

Belt Tightening

The FCC has just released Docket No. 20777, the latest step in the "deregulation" program. Let us examine the immediate effects the proposal would have on amateur operation in the lower frequency bands.

1. Conventional AM, double sideband (reduced or suppressed carrier), and narrow band FM would be prohibited.
2. SSB and SSTV signals would be much more severely restricted in terms of permissible bandwidth than at present. Independent sideband simultaneous transmission of SSTV and voice signals would apparently be precluded.
3. Wide shift RTTY would be forbidden in the present CW bands, but wide and narrow shift forms of FSK would be allowed in the "phone" bands.
4. MCW (A2 emission) would be legal on all frequencies in the HF bands.

The style of reasoning that must have gone into this proposal reminds me of the "doublethink" which George Orwell describes in *1984*, in which the government insists that "War is Peace; Ignorance is Strength; Freedom is Slavery." Now, outlawing AM, DSB and NBFM and applying strict bandwidth limits to SSB and other modes is deregulation.

Our bands are not critically overloaded by present amateur usage. With the increase in popularity of VHF FM, the HF phone bands have become significantly less crowded in recent years. Of course, we do not know what we will have as frequency allocations after 1979. But today, specified bandwidth limits are neither necessary nor desirable. It would work undue hardships on many amateurs to be forced to abandon their present rigs. We should wait until after the WARC to decide if we need rigid belt tightening.

Donald Chester K4KYV/1
Cambridge MA

LETTERS

OWING

Here's some dough for yet another of your code tapes.

I bought the 5 and 6 wpm tapes when I joined the Novice class being conducted by the 2 meter repeater club here in Beaumont. The 5 wpm tape was being used to drum the blasted code into us.

After missing one of the weekly classes, I arrived at the next class to find a stranger tuning up his beeper and saying something about a test.

I'd gotten pretty much through the 5 wpm tape, but hadn't even tried the 6 wpm and figured there'd be no way I'd pass the test. I took it just for laughs and turned it in on the theory that I might just pass.

Damned if I didn't.

So now I have this mainly unused 6 wpm tape. I'm waiting for the Friendly Candy Company to send my written test now, and I plan to work with that 6 wpm tape while waiting for the ticket so I won't sound like a dummy on the air. I've come by a Heath SB-101 and have put up a 40 meter dipole and am having fun listening.

One thing the other people in my class and I have noticed — these hams helping us get our Novice tickets sure are going to a lot of trouble just to help other people out. They're not getting anything out of it except satisfaction.

"Somebody helped me when I got into it," one of the instructors said. "This is the only way I can pay it back."

It's that attitude that I like the best about ham radio. Already I owe so much to so many people I can't even remember it all.

Richard Stewart
Beaumont TX

GETTING THE CALL

The Sterling-Rock Falls (Illinois) Amateur Radio Society was once again called upon by the local United Cerebral Palsy officials to provide communications for their annual WALKATHON EVENT. This event took place on May 15th.

The 20 mile march by grade school and some high school students got off to a start at 9:00 am and finished at 3:30 pm. The following volunteers in mobile units operated in 2 shifts and also helped to supervise the march: Paul Johnson K9BEF, Olli Ikonen WB9DNA, Bill Peters WB9MCZ, Dick Little K9EEH, Ed Fisher K9APD, and John Ordean WA9BSO. Other members assisting these units were Warren McMurry WB9DNR, Tom Carney WN9RXJ, Ken Weissenburger WN9RVY, and Dan Gryder WN9PSQ.

Several members of the Sterling-Rock Falls Amateur Radio Society and members of the Rock River Amateur Radio Club (Dixon) participated in the Sauk Valley Canoe Association race held May 16th, by providing communications from both land and boats along Rock River. This was a 14 mile stretch starting from Dixon, where the Dixon hams started and took over for a 7 mile stretch and then the Sterling-Rock Falls boys took over for the remaining 7 miles to the finish at the East End of Sterling at the boat marina. The Sterling-Rock Falls members were: Paul Johnson K9BEF and Jim Zeigler WA9NXE. The Dixon members participating were: Chuck Randall W9LDU, Phil Ogan WA9VCN, Darrell Webb K9JBX, Claude Ensinger WB9EBS, Neil Howell WA9OPS, Walter Martin WB4VWH, Sam Berard K9KNV, and Mike Heughes WB9GWU.

John Ordean WA9BSO
Sterling IL

HOOKED

Keep up the I/O section. I'm hooked for sure. Since I wrote last, Dave K5WNV has his floppy disk and high speed printer up and flying. With the 24K memory and the disk we are really getting with it. Even running a fairly sophisticated Startrek. We're building both a RTTY and a video link from his shack to mine (25 miles). The video (439.25 MHz) works at short range, but we need more power to clear the hills between us. These hills are over 6000 feet high so you might call them mountains back there. We are running the VHF Engineering rig and modulator on page 28 of the June issue (beat you to it). Need a linear. Again keep it up.

Rod Hallen AA7NEV
Tombstone AZ

BACH BEST

Keep up the great work on *73*. J. K. Bach is your best writer ("Glass Arm")!

Rick Ferranti WA6NCX
Menlo Park CA

WONDERFUL

I recently took advantage of your $17.76 subscription special, and I am including an order for 250 QSL cards. I first started reading *73* at the local library, and after I got my Novice ticket I decided to get a subscription to your wonderful magazine (even with the new format). I enjoy your magazine tremendously and get more good out of it than the other ham magazines. Keep up the FB on the articles and editorials.

Jeff Ware WN7CIK
Nampa ID

SAVING THE SORCERY

I believe you have heard, or soon will, of the sailing sloop *Sorcery* emergency starting Saturday morning, May 8th. The 62 foot sailing vessel *Sorcery* took a 360 degree roll during a storm 1200 miles north of the Hawaiian Islands (42 degrees north, 162 degrees west). She was en route to California from Japan. Mabel W6YLT was aboard. Because of her roll over, she lost all power, masts, commercial radio gear, and life rafts. One crewman was swept overboard and was recovered, but was suffering from shock. Mabel's daughter suffered a compound fracture of the leg, and another crew member had a badly lacerated face. Below decks was a shambles. Mabel rigged an antenna and got a ham radio on 20 meters with battery power.

I thought I would fill you in on the first hour of the emergency:

I was operating on 14.323 in contact with WB9PRZ in Indiana, with my beam pointing east. KL7HAY, Harold (Hal) Berry in Homer, Alaska, heard us and broke in. Hal is a personal friend who winters in Sequim, Washington, and summers in Alaska. He had just moved up there a few weeks ago. His call in Sequim during the winter is WA7SQZ. During the 3 way contact, Hal (I believe his antenna was facing south) heard the distress call from W6YLT/mm region 2. He informed me and the other station. The Indiana station cleared and signed out. I turned my beam west and also picked her up. She was very weak, but between us we were able to get her location and condition. Hal said he would inform the Coast Guard. It turned out that he did not have a phone yet and had to go about a half mile away to reach one. While he was gone for about 20 minutes, I thought my correct job was to maintain communication with Mabel and keep the channel clear, which I did. I told Mabel that I knew KL7HAY had himself spent many years at sea and that I had complete confidence in him to notify the Coast Guard. WA6EAZ, Bill in San Francisco, heard me broadcasting the alert and broke in. He could not hear Mabel, so I asked him, because of his strong signal, to help keep the channel clear. He did a good job of this, moving above and below the frequency to keep other stations from QRMing. Then he got San Francisco Coast Guard on his phone patch. Hal got back to his rig by this time, and Bill patched both Hal and me into the San Francisco C.G. We filled them in and they notified Juneau, Alaska C.G., which would handle the search. Because Hal did not have a phone in his shack, Juneau Coast Guard called me long distance to confirm that it was no hoax and get further information.

At about the end of the first hour, Kodiak, Ketchikan and Widbey Island, Washington ham stations came on. They were all hearing Mabel somewhat better than we were, so we three, W7SRU, KL7HAY, and WA6EAZ, confined ourselves to a monitoring role and channel guard for the next 25 to 30 hours of the emergency.

I am happy to say that all through the emergency QRM was never a serious problem. All stations were cooperative, and stations whose services were needed at some times bowed out to monitor when they were not needed and remained quiet.

I think Hal KL7HAY should be commended for hearing that first Mayday. Mabel was very weak. We lost her for about 15 or 20 minutes, the boat was taking on water and I thought sure it had sunk. Then Hal's sharp ears heard her again.

Mabel should be commended for her calmness and proficiency during a difficult situation.

Bill WA6EAZ's phone patch for us into San Francisco Coast Guard really helped to get the ball rolling during the first half hour.

Fred A. Boggs W7SRU
Port Townsend WA

WILSON GOOD GUYS

Better put the Wilson gang in Las Vegas on your "good guys" list! Perhaps on the top. Ordered a 5 Watt hand-held by phone on Monday, and it was here in Anchorage on Friday, all crystalled up and working "five by."

Air Mail of course! How's that for service!!!

Lt. Col. Herb Rosenthal KL7AE
Anchorage AK

MASTERPIECE

Received my July, 1976, *73 Magazine* today (May 29). Some service for sure.

Your editorial, "The Good, The Bad, The Ugly," was very interesting. Enjoyed every word. In my opinion, it is a masterpiece. Keep up the good work. I have been a ham 54 years this April and I am proud of it.

W. J. Gentry W5GF
Amarillo TX

BOTHERING THE DIEHARDS

I was interested in your I/O Editorial for July 1976 – particularly where you intend to set up cassette computer programs. Whenever you get set up to where you can show some typical simple computer setups where all you have to do is to plug in a TV monitor for readout, or cheap surplus teletype, and a cassette recorder, thousands of guys like me who are not computer hobbyists will buy them – or make them from kits. For what they do, not for what they are – what they do for us.

This will come about only if you get the programs wanted on cassettes. For the home trade, I think games are kid stuff. I'm busy enough – so are you – not to waste time with games. And not many of us run small businesses! Our major bookkeeping is balancing the bank account, and $5 calculators do that OK.

Program books – take a bunch of books on antennas and program them into an antenna cassette. With graphics if you can, even if the graphics have to be fed into an SSTV monitor.

A cassette on recipes – one for cooking fish, another for vegetarian vegetables, herbs and spices, etc. Microwave ovens – complementary vegs.

One on nutrition – vitamins, minerals, essential amino acids and enzymes – take the McGraw-Hill Nutrition Almanac for a starter. I know of a doctor who updates his computer with nutrition items twice a week from all known sources – and his is a pretty fee, around $300, to outline your initial program.

Cassettes on hints and kinks – there are so many books that this is endless. Get the writers of technical books together with programmers and you will come out with lots of cassettes – and buyers for lots of minicomputers!

We have a computer at our ATV repeater and any user can feed ASCII into his FM audio input and trigger it. You can get it to give you S-meter readings every few seconds with around 12 readings to a page, and updated as long as you run it – unattended. You can rotate your antenna, change antennas, change powers, and see the results from the computer. There is nothing like it – though the FCC would like to take it away from us. And it bothers no one – but a few diehards in the FCC.

Charles E. Spitz W4API
Arlington VA

BRAVE "BRONKO"

I almost applied for a position on your "way out" *73* staff, but decided to have a brain operation instead. (I have Dystonia Musculorum Deforman, a rare disease, and have an appointment at St. Barnabas Hospital, Bronx NY, for brain surgery. So wish me luck and I'll be looking forward to each and every issue with the same excitement as always.)

I have had the opportunity to get to meet and speak with W2NSD/1 at the 1974 and 1975 Dayton Hamventions. At present, however, I speak and walk like a drunk because of my disability. Since it is progressive at this stage, I'm sure he was only showing his PR side and was certainly not impressed – although I was. Very much so. I certainly wish he knew the tremendous amount of energy it took for me to elbow my way through the crowd from the parking lot to the booth to have the honor to meet and shake hands with such a brave "bronko," although I'm sure he did not understand a third of what I was trying to say. My energy level has gotten so low that I could not make it to this year's Dayton Hamfest. If I could have, Wayne would have had to put up with my persistent effort to be friendly and be understood. MAYBE IF AND WHEN I HAVE BRAIN SURGERY I'LL BE ABLE TO WALK, TALK AND BE MORE NORMAL, AS OTHER PEOPLE. Then look out, sir, for I shall be able to be understood and I'll verbally twist your ear off. Thank you for reading this (if you got this far).

Jack E. Foster W8JYE
Newark OH

SIGN ME UP

I read your editorial re probable economic coercion exerted by Eimac against your editorializations.

All I have to say is . . .

Sign me up for another three years!

Henry Gardiner IV WA1GAR
Waltham MA

READY

It was a typical heading-home-from-work crowd on WR4ACN, the Chesapeake-Norfolk, Va. repeater, on the afternoon of May 20. Suddenly, at 1645, K4IIV broke in with an emergency request for amateur portable units to coordinate a foot search for two runaway teenage girls who were feared lost in a highly woody and swampy quicksandish area just south of the Norfolk Naval Shipyard in Portsmouth, Va.

WA4MMP mobile, who was about 5 miles from the scene, immediately took charge, and rapidly established an emergency net soliciting operators with 19/79 hand-held equipment. Within 15 minutes, 5 mobile units with hand-held capability were on their way. These included WA4PRU, WB4MBS, WB4AXY, WB2KEA and WB2KLL. Shortly thereafter, WB4OHZ was on his way and W4THN and WB4WSU were en route to the South Norfolk Airport to take up a light plane with a handie-talkie to assist the foot units. Five other volunteer stations were on the air and waiting at home should they be needed in the field.

By 1815 all units including the aircraft were on the scene, and the search began through the half mile by half mile wooded swamp area. The ground and air units were coordinated by WA4MMP mobile, who had positioned himself with the search organizers midway along the search area frontier. For the next hour and a half an extensive foot/air search was conducted without results, and the operation was secured at 2000 (dusk). The two girls were spotted by police the next day in Hampton, Va., and safely returned to their homes.

Although the operation was unsuccessful in locating the girls (they were not in the searched area), it was an excellent example of how amateur radio operators and their VHF repeater systems can respond quickly and efficiently to their communities in times of need. We know that next time we're called, we're ready!

William R. Shaw WA4MMP
Chesapeake VA

SHOCKED

I just received my July issue of *73*, and I was shocked when looking through it. On page 46 there was an advertisement for a citizens band radio, which is deplorable to put in a magazine whose readers are hams and expect to find information on amateur matters. This includes both articles and advertisements.

I first subscribed to *73* because of the number and quality (both are high) of your articles, but the reason you guys would stoop so low as to CB ads in a ham magazine is beyond me. Wayne, I hope your desk has been flooded with letters like this, and I think you have some explaining to do.

John Pilson AA1UZK
Box 27
Saunderstown RI 02874

Nope, John . . . it's a flood of just a few letters. I've tried several CB rigs in my car and the Standard Horizon 29 is fantastic . . . substantially better than the others, so I was

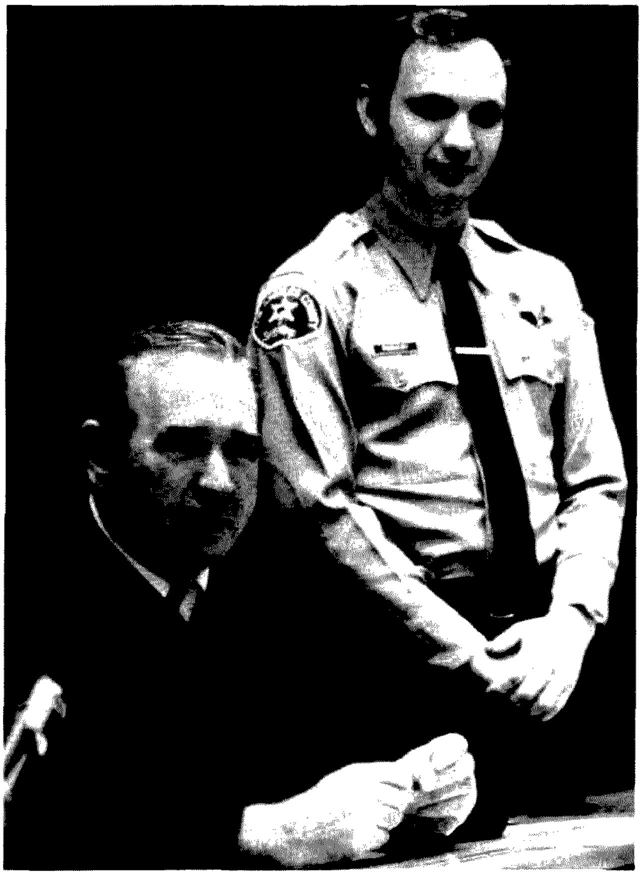

SMALL WORLD

After months of QSOing each other on 2 meter mobile en route to downtown Los Angeles, Bill W6ONC (left) and Andy WA6WXD (right) discovered, to their amazement, that they were Judge Ritzi and Bailiff Romanisky in the very same Superior courtroom each day! Prior to that, they were unaware that they even worked in the same building.

Lenore Jensen W6NAZ
Sherman Oaks CA

happy to see it advertised. Apparently you are not one of the first to get the word on how CB has changed in the last couple of years . . . hopefully a reader or two will drop you a letter and bring you up to date. I just wouldn't drive without CB these days, as it is very valuable. I use it to get road directions, say hello to people along the road (including the fuzz), keep track of traffic problems, etc. Further, most of the new hams these days are coming from CB, so a bigoted attitude toward this group is odd, at best. FCC estimates are that we might well hope for over a million CBers to join amateur radio in the next couple of years. I think we need all the hams we can get on the CB bands. That way we can keep bugging them with the "next step" of hamming — Wayne.

BYE-BYE TVI

I own a three decker three family house and I had TVI with one of my tenants, and a neighbor, who also lives in a three tenement house, one block away. I thought it very peculiar that one tenant should get it, and others not, but subscribed to the popular thinking of insufficient shielding in the i-f of the TV sets. As it happens, in these three decker houses the 220 V ac is brought in to a main box, then is taken to serve three 110 V ac lines. The only way to do that is 2 on one side and one on the other side. After a lot of fuses renewed at the main box, I investigated the cause, and came to the conclusion that I needed a heavier service line in, plus heavier fuses. Being a cheap guy, I sought another way, and that way was to have my tenant taken off my side of the line, and put with the other tenant. Even then, I did not realize that I had done anything remarkable until my tenant said to me, "I cannot listen to talk any more. I liked to hear gossip over the radio. I could tune you in anytime I wanted — now I can get no more news." I am slow on the uptake, so it took two days for it to sink in that the greatest interference is by the power lines. Anyone using the service from the same side of the power line that you are on is 90% liable for TVI. If the amateur is giving trouble to his neighbors (who are surely using the same pole transformer and the same side of the line as the amateur), then all he has to do is *change over to the other side of the 220 V ac line.*

Of course one would say then that he would get another crop of TVI neighbors, but it is hardly ever so. The contractors who put up houses, and the electricians, use the same rule of thumb: The front part of the house goes on one side of the line, the back part on the other. I have passed on this information to the local hams, and it works. So now I am sending it to you to pass over to *hamdom* in your magazine.

Cyril Lievesley WA1LET
Fall River MA

MAKING PLANE'S

I've been lookin tru Ben Franklin's May issue & as per usual it's jus loaded with lot's a info. However, last night arnd 9 I was talkin 2 an HRO dn in the Santa Cruz Mtns on 2 M with my Clegg an my 270 Vertical antenna & a HRO broke in saying that when I was tru he'd like a word with K6OPG . . . it turned out that he'd jus flu in fom SINGAPORE 2 days before, & Doc Charan 9V1NR, my ol friend had tol Ed, this HRO, that if he'd ever hrd Kenny K6OPG 2 please say hello 4 him & 2 tell me that it was abt time 4 me 2 come out & pay him a visit 4 a few weeks, as it hasn't been since 1972 since I've visited him & SINGAPORE (the best Country in the World) . . . Well, I haven't hrd Charan 9V1NR on the Ham bands lately, but then I'm jus Not on the air all of the time. Nevertheless, I'm making plane's 4 my visit (& it won't be via a 747 like the last time that I flu into SINGAPORE complements of my MARS ID card in my wallet, but that another story. This time I'll probley take a few years in getting there, as I jus bought a 32' diesel powered sailboat & I'm sholy learning how 2 navagate fr Leanard Davis W6LZA who's a marine engr that jus happens 2 be on the beach at the presant time & over the week-end wer installing some bronz plate's 4 my radio grounding system I'll need 4 my VHF & low-band ATLAS that I plan 2 use aboard. But, I'm out of paper, but will keep U informed.

Kenny Mahoney K6OPG
San Francisco CA

ON TOP

I'd like to bring your attention to the American military amateurs in D-land. You've heard the DA calls on the bands. Through the attentions of DA2BA/WA5LVT, I took my Tech exam and now am waiting for the results to filter back through the federal maze. Activities of this sort, coupled with clubs like the Wiesbaden Amateur Radio Club, with its multinational membership, make amateur radio in Germany an exciting deal.

In reference to *73 Magazine*, it was the first I read, and none can top it.

Dale LeDoux
Mainz, Germany

LIMARC ATV

LIMARC will shortly put on the air an experimental amateur radio television repeater from the top of the Plainview tower at the Long Island Expressway and Sunnyside Blvd. This repeater will have a center of radiation of 550 feet above sea level and an estimated service radius of forty miles. Its input frequency is 439.25 MHz and it will output at 427.25 MHz, with an effective radiated power of 500 Watts.

This ATV program is planned to be a pioneer operation in the metropolitan New York area for sociological electronic uses of interactive audio visual communication (by radio) through simple home terminals and publicly located terminals (such as in schools, library community rooms and the Hall of Science at Flushing Meadow). Conceivably, operations such as this can usher in a completely new dimension in community educational activity and thereby generate a new radio service of undreamed potential and promise.

We in LIMARC are committed to this program and plan to also explore through this repeater operation other experiments utilizing narrow band high definition slow scan frame grabbing techniques and computer access by remote keyboard through radio links.

Ed Piller W2KPQ
Syosset NY

HURRICANE WATCH

I wish to inform all concerned that the Hurricane Watch Net will be operating on the frequency of 14325 this year. Also, this frequency will be used for emergency traffic (*only*) if and when it is deemed necessary. Other traffic such as health and welfare will be handled on other frequencies as in previous years (the YLISSB, Intercontinental Traffic Net, and IMRA, to mention a few, as well as other bands).

If any other information is needed, write or phone the manager, Phil J. Craig K4CRU, 115 S. Entrada, Hollywood FL 33021, (305)-983-4536, or myself.

Timmie S. McCraw WB4LQO
Box 277
Mountain Home NC 28758
(704)-692-1042

LEMME TELL YOU!

Now just who do you think you're calling a "WN"? I got your 14 wpm tape *months* ago. Do you honestly think that I wouldn't have upgraded by now?

Here's how it happened: I got your tape in the mail and dropped everything to get it on the tape recorder. After about 2 minutes I got very angry at you, Wayne. Please, in the future, try to get the labels on the same side as the code. The code was on the opposite side. Hi, hi.

Well, when I finally found *that* out, the fun first began. The first two groups were okay, but after that — down the drain. Well, to make a short story long, I worked with that tape on the average of one half hour per day for about 6 weeks. Then one day I sat down, and, after being content with copying 5 groups in a row perfectly, I proceeded to copy one half of a loose-leaf sheet — without a single mistake!!! Lemme tell you, Wayne, that tape was really something.

For the technical part of the exam I used the General Class Study Guide which I got from a friend. Hey, thank the author for me, huh? I couldn't make head nor tail out of the License Manual at first, but after reading your book, I went back to the License Manual, and I actually understood what was there! Great!

I knew this Wednesday was it. (And boy was it ever; it was the first day of the new term and I got stuck with the worst seats in each class. Grrrrr.) Tuesday night I fell asleep saying, "You will not be nervous, you will do fine," over and over again.

Wayne, I woke up *so* nervous that morning I would have been happy pulling off a Tech. But finally my stomach settled down as I walked into the FCC office in New York. (I still can't figure out if it just settled down or was killed by that subway ride.)

After an incredibly long wait, we were taken in for our code tests. First they send you one minute of 13 wpm as a warm-up. Funny, it sounded more like 10 wpm. Hey, what are they trying to pull here. Ooops, here comes the real thing. Missed one. Missed another one. "Calm down," I tell myself. I reach the end of the page. I go back to fill In. Wayne, I think I filled in 2 letters in over 15 lines. That 13 wpm was nothing. That code tape really did the trick.

The written part of the General was just bordering on difficult, thanks to your book; the Advanced was even easier.

Well that's about it, Wayne. I'll let you (and everybody else, if this ever gets into print, which I seriously doubt) off the hook. Oh, just one more thing, I want to compliment you and your staff on a fine magazine (*73*, remember?). It never fails to mess up my schedule when it comes. I have to read it from cover to cover.

David M. Krumholz WA2YYL
Rosedale NY

P.S. I like your editorials.

A PLEA

This letter is a plea for more peripheral equipment to interface with the new family of microprocessors.

I have been working in data processing for over 20 years and have been following the development of the small processors. I can now pick up *73* or *Popular Electronics* and find pages and pages of advertisements for CPUs and RAMs at reasonable cost. But where is the I/O? I do not consider the TV typewriter display as an I/O device, but simply one for occasional communication by the operator with the processor. Well, what else do we have? Not much. Disk storage units are nice (nice and

Continued on page 140

CONTESTS

Editor:
Robert Baker WA1SCX
34 White Pine Drive
Littleton MA 01460

NOTE

Just received a note from K5MRU, who says the correct results for the 7th district in the 10-10 Net Winter QSO Party should have been K7PXI 83/207 and WB7AUJ 73/128, and WA7YCQ should have been omitted. Also, please note the date change by ARRL for the VHF QSO Party from the slow weekend of Sept 4th to the following weekend, making 4 contests for the weekend of Sept 11th!

KENTUCKY QSO PARTY

Starts: 000 GMT Aug 28
Ends: 000 GMT Aug 30
(full period)

SPONSOR:

Bluegrass Amateur Radio Club, Lexington, Kentucky.

EXCHANGE:

KY stations send RS(T), county, and consecutive QSO number. Other stations send RS(T), consecutive QSO number, and state, country or province.

SCORING:

One point per QSO. Multipliers for KY stations are total states, countries or provinces worked. Multipliers for other stations are total number of KY counties worked. A bonus multiplier of 1.5 may be taken if power input of 250 Watts or less is used.

ALLOWABLE CONTACTS:

One CW and one other mode per band. 6 and 2 meters to use simplex operation only.

SUGGESTED FREQUENCIES:

Lower edges of General HF CW and phone bands; also Novice frequencies.

LOGS:

Send logs by October 1 to Robert H. van Outer WB4YQY, 285 Hillsboro Ave., Lexington KY 40505. Appropriate awards will be presented.

FOUR LAND QSO PARTY

Starts: 1800 GMT Saturday, Sept 4
Ends: 0200 GMT Monday, Sept 6

This is the 7th annual QSO Party and is sponsored by the Fourth Call District Amateur Radio Assn. of the IARS. The same station may be worked on each band and/or mode fixed, and repeated again if operated portable or mobile from another county. Fourth call district stations may work other stations within the 4th call area.

EXCHANGE:

4th call area stations will send RS(T), state, and county. All others send RS(T) and state, province, or country.

FREQUENCIES:

Phone: 3940, 7260, 14340, 21360, 28600.

CW: 3575, 7060, 14070, 21090, 28090 (+/- 10 kHz).

Novice: 3710, 7110, 28110 (+/- 10 kHz).

SCORING:

4th call area stations score 1 point per W/VE QSO and 3 points per DX QSO (including KH6 and KL7). Final score is total points times total number of states and provinces (regardless of bands). All others score 2 points per QSO times the sum of the number of 4th district states and counties (count each state and county only once). For this bicentennial year, add 2 points for each CHC or FHC member worked. All CHC/FHC members will send their CHC or FHC number along with the report.

AWARDS:

Certificates to top scorers in each state, VE province, and country. Second and third place awards where scores warrant. High Honor Trophy Award (certificate) to high scorer in 4 Land, high W/K outside 4 Land, and to VE and DX country. Also county awards to 4th call area states and special awards to Novice, SWLer and blind-handicapped.

ENTRIES:

Mail logs with score within 30 days of end of party to 4th Call District ARA, Attn: Bob Knapp W4OMW, 105 Dupont Circle, Greenville NC 27834. Include an SASE for results.

ARRL VHF QSO PARTY

Starts: 1900 GMT Sept 11
Ends: 0600 GMT Sept 12

Rules same as June QSO Party; check August issue of QST for any last minute changes!

Entrants may operate no more than 28 of the 35 hours during the contest period. The seven hours off-time must be taken in increments of 30 minutes or more. Listening time counts as operating time. All contacts must be made on amateur bands above 50 MHz using authorized modes. Fixed, portable, or mobile operation under one call, from one location only is permitted. Any transmitter used to contact a station may not be later used to contact another station during the contest period with any other callsign. Contacts made by retransmitting either or both stations (such as repeaters) do not count for contest purposes. Each contact exchange must be acknowledged by both operators before either may claim contact points. A one-way confirmed contact does not count.

EXCHANGE.

Simply exchange your ARRL section.

SCORING:

On 50 or 144 MHz count 1 point per QSO, on 220 or 420 MHz count 2 points per QSO, and on higher UHF bands count 3 points per QSO. Final score is then the total QSO points multiplied by the number of different bands used.

ENTRIES:

Usual awards will be issued and the standard disqualification rules will apply. Logs and entry forms are available from ARRL, 225 Main St., Newington CT 06111. All contest entries should then be returned to this same address.

WASHINGTON STATE QSO PARTY

Starts: 1600 GMT Sept 11
Ends: 2400 GMT Sept 12

Please note the time change from previous years!

The 11th annual WASH State QSO Party is sponsored by the Boeing Employees' Amateur Radio Society (BEARS) and is open to all amateurs. All bands and modes may be used. Stations may be worked once on each band and each mode for contact points and more than once each band/mode if they are additional multipliers.

EXCHANGE:

QSO number, RS(T), and WASH county or state/province/country.

FREQUENCIES:

Phone: 1815, 3935, 7260, 14310, 21380, 28660.

CW: 1805, 3560, 7060, 14060, 21060, 28160.

Novice: 3735, 7125, 21150, 28160.

SCORING:

WASH stations score 1 point per QSO (including other WASH stations); all others score 2 points for each QSO with a WASH station. WASH stations multiply total contact points by the total of different states, provinces, and countries worked. All others multiply total contact points by the total of different WASH counties worked (39 max). There is an extra multiplier of 1 for each group of eight contacts with the same WASH county for non-WASH stations.

AWARDS:

Certificates will be awarded to the highest scoring stations (both single and multi-op) in each state, province, country, and WASH county. Additional certificates may be issued if warranted.

The Worked Five BEARS Award is also available to anyone working 5 club members before, during, or after

CALENDAR

Sept 4 - 5	Albatros SSTV Contest
Sept 4 - 6	Four Land QSO Party
Sept 11 - 12*	European DX Contest – Phone
Sept 11 - 12	ARRL VHF QSO Party
Sept 11 - 12	Washington State QSO Party
Sept 11 - 12	Pennsylvania QSO Party
Sept 16 - 18	YLRL Howdy Days
Sept 18 - 19	Scandinavian Activity Contest – CW
Sept 18 - 20	Maryland/DC QSO Party
Sept 25 - 26	Scandinavian Activity Contest – Phone
Sept 25 - 27	Delta QSO Party
Oct 2 - 3	VK/ZL/Oceania Jubilee DX Contest – Phone
Oct 2 - 4	CARTG Worldwide RTTY DX Contest
Oct 8 - 10	CD Party – Phone
Oct 9 - 10	VK/ZL/Oceania Jubilee DX Contest – CW
Oct 9 - 10	RSGB 21-28 MHz Contest – Phone
Oct 16 - 17	RSGB 7 MHz Contest – CW
Oct 16 - 18	CD Party – CW
Oct 17 - 18	Manitoba QSO Party
Oct 19 - 20	YL Anniversary Party – CW
Oct 30 - 31	CQ Worldwide DX Contest – Phone
Nov 5 - 8	IARS/CHC/FHC/HTH QSO Party
Nov 6 - 7	RSGB 7 MHz Contest – SSB
Nov 6 - 8	ARRL Sweepstakes – CW
Nov 9 - 10	YL Anniversary Party – Phone
Nov 13 - 14*	European DX Contest – RTTY
Nov 14	OK DX Contest
Nov 20 - 22	ARRL Sweepstakes – Phone
Nov 27 - 28	CQ Worldwide DX Contest – CW
Dec 4 - 5	ARRL 160 Meter Contest
Dec 11 - 12	ARRL 10 Meter Contest
Dec 31	Straight Key Night
Feb 19 - 20	YLRL YL-OM Contest – Phone

* = described in last issue

the QSO Party. All QSO Party entries will be screened by the Contest Committee for possible Worked 5 BEARS Awards. A Worked 3 BEAR Cubs Award is also available for working 3 Novice members.

ENTRIES:

Logs must show dates, times in GMT, stations worked, exchanges sent and received, bands, and modes used and scores claimed. Include check sheet for entries with more than 100 QSOs. Each entry must include a signed statement that the decision of the Contest Committee will be accepted as final. No logs can be returned. Results of the QSO party will be mailed to all entries and an SASE is NOT required. Logs must be postmarked no later than October 11, 1976 and sent to Boeing Employees' Amateur Radio Society, c/o Contest Committee, Willis D. Propst K7RSB, 18415 38th Ave. S., Seattle WASH 98188.

PENNSYLVANIA QSO PARTY

Operating Periods:
1600-0500 GMT Saturday, Sept 11
1300-2400 GMT Sunday, Sept 12

The 19th annual PA QSO Party is sponsored by the Nittany ARC and all amateurs are invited to participate. PA stations may work both in-state and out-of-state stations.

EXCHANGE:

QSO number, RS(T), and PA county or ARRL section.

FREQUENCIES:

Phone: 1815, 3980, 7280, 14315, 21380, 28560.

CW: 1810, 3550, 7050, 14050, 21050, 28050.

Novice: 3715, 7160, 21115, 281115.

Please note changes from last year's frequencies!

SCORING:

PA stations score 3 points per non-PA QSO and 1 point per PA QSO. Final score is total number of QSO points times number of ARRL sections worked (including EPA and WPA) plus a multiplier of 1 for any DX. Non-PA stations score 1 point per QSO times the number of PA counties worked (67 max). Stations may be worked once per band and mode.

AWARDS:

Certificates to section winners with 10 or more QSOs.

ENTRIES:

Logs must show dates/times in GMT, stations worked, exchanges sent/received, bands, modes, number of new section/county as worked. A summary sheet should be included indicating number of QSOs, total counties/sections, QSO points, claimed score, rig description, operating time, and any other gripes, suggestions, etc. Mail by October 15th to Douglas R. Maddox W3HDH, 1187 S. Garner St., State College PA 16801. Do not include an SASE.

YLRL HOWDY DAYS

Starts: 1800 GMT Thursday, Sept 16
Ends: 1800 GMT Saturday, Sept 18

Scores will be based on contacts with licensed women operators ONLY. All bands and modes may be used but crossband operation and net contacts are not permitted. Only one contact with each station will be counted.

SCORING:

Score 2 points per YLRL member worked and 1 point for each non-YLRL member YL worked. No multipliers!

AWARDS:

Top scoring YLRL member will receive her choice of a YLRL pin, charm, or stationery. Non-YLRL member will receive a one year membership in YLRL.

ENTRIES:

Logs should be sent to Mrs. Myrtle Cunningham WA6ISY, 1105 East Acacia Ave., El Segundo CA 90245.

VE/W CONTEST

CW
Starts: 0001 GMT Saturday, Sept 18
Ends: 0000 GMT Sunday Sept 19
Phone
Starts: 0001 GMT Sunday Sept 19
Ends: 0000 GMT Monday Sept 20

The Montreal Amateur Radio Club Inc. invites all W/K and VE/VO amateurs to participate in the 1976 VE/W contest to be held the weekend of September 18-20.

Rules for the 1976 contest include some changes from last year, and therefore should be read carefully by everyone intending to participate. These changes were incorporated at the request of many amateurs participating in last year's contest.

A 10X multiplier is continued for W/K participants in an attempt to equate U.S. and Canadian scores, thus encouraging more competition between the two areas.

Stations should look for each other in the "General" part of the phone and CW bands, and are reminded to check all bands for openings.

Log sheets, regardless of score, will be of definite interest in preparing the contest summary. It will also be of definite interest in preparing "soapbox" comments, unusual occurrences, etc.

ELIGIBILITY:

The contest is open to all licensed amateurs located in the ARRL sections listed on page 6 of any *QST*.

CLASSES OF ENTRY:

The contest is divided into two classes: CW and phone. CW and phone scores must be logged, tabulated and submitted separately.

TYPES OF ENTRY:

There are two types of entry — single operator and multi-operator. A single operator station is one manned by an individual amateur who receives no assistance from other persons during the contest, such as log keeping or spotting stations.

Stations where two or more amateurs operate a station, or where a single operator receives assistance in operating the station, must be placed in the multi-operator category.

CONTEST PERIOD:

CW Class — All CW contacts must be made during the period 0001 GMT Saturday, September 18 and 0000 Sunday, September 19. Only 18 hours total operating time may be used during this period. Times on and off the air must be shown in the log. Minimum time off period allowed is 15 minutes. Listening time must count as operating time.

Phone Class — All phone contacts must be made during the period 0001 GMT Sunday, September 19, and 0000 GM Monday, September 20. Only 18 hours total operating time may be used during this period. Times on and off the air must be shown in the log. Minimum time off period allowed is 15 minutes. Listening time must count as operating time.

BANDS:

All bands and modes for which the participating entry is licensed may be used. A station may be worked once on each band in each contest classification. The use of repeaters for contest exchanges is not permitted.

EXCHANGE:

W/Ks will work VE/VO stations and vice versa. W/K to W/K and VE/VO to VE/VO QSOs do not apply. Valid points can be scored by contacting stations not in the contest if complete exchanges are made. The exchange consists of RS or RST report, a consecutive number beginning with 100 for the first CW contact made at the beginning of the contest, and the number 200 for the first SSB contact, and the ARRL section for W/Ks and geographical areas listed below for VE/VOs.

Newfoundland	VO1	NFLD
Labrador	VO2	LAB
P.E.I.	VE1	PEI
Nova Scotia	VE1	NS
New Brunswick	VE1	NB
Quebec	VE2	QUE
Ontario	VE3	ONT
Manitoba	VE4	MAN
Saskatchewan	VE5	SASK
Alberta	VE6	ALTA
British Columbia	VE7	BC
Yukon	VE8	YUK
Northwest Territories	VE8	NWT

Example CW exchange might be "W9XXX DE VE4YYY 579-165 MAN K"; an example SSB exchange might be "VE1WWW, this is W7ZZZ. Your report 5 and 9 and 296 Oregon go ahead."

SCORING:

Each completed contact is 2 points times the number of sections worked on each band, plus a 10 times multiplier for U.S. stations participating,

RESULTS

RESULTS OF THE 1976 YLRL, YL-OM CONTEST

Overall winners:

YL – CW		OM – CW	
WA5VJW	21,532.5 points	AC4CHK	1,500 points
YV5CKR	16,669	W5WZQ	1,365
W4VQZ	13,800	W3ARK	1,282.5

YL – Phone		OM – Phone	
W7JYX	52,345	AD4JRB	2,535
W4VQZ	48,240	I0DUD	2,430
I3MWP	40,128	W4CHK	2,040

Other High Scores were:

YL – CW		YL – Phone	
K1NEI	10,295	LU1BAR/W3	21,538
WA2DMK	7,356.25	W4LYC	1,770
WA3SWU	350	WB5LMZ	6,000
WA4EPM	2,945	WA6ISY	2,450
W5QWI	3,135	K8ONV	18,176
WA6TOD	6,500	W9VNG	24
K8ONV	12,400	WA0YNC	11,115
WA0YNC	11,115	VE7DKC	2,626
VE2EDO	2,565		

OM – CW		OM – Phone	
W1PEG	875	W1PEG	80
W2RPZ	672	K2LFG	522.5
AD3RFB	238	WA3KSQ	227.5
K4IEX	800	W4KFB	625
K5RRG	797.5	WB5GRI	175
W6ZT	638	W7AHZ	165
AC7BKK	300	W9LNQ	906.25
W9LNQ	656.25	W0GNX	1,440
WA0FMD	747.5	VE2QO	61.25
VE3EMA	840		

e.g., 25 contacts in 10 sections on 21 MHz, 10 contacts in 10 sections on 14 MHz, and 20 contacts in 10 sections on 3.7 MHz = 25 + 10 + 20 = 55 contacts x 2 = 110 points x (10 + 10 + 10) 30 = 3300 points for Canada, but 3300 x 10 = 33000 for U.S. stations.

CONTEST SUBMISSION:

Log sheets and a summary sheet are required with every submission. The summary page will be submitted as the first page of each entry showing number of contacts, multipliers and total scores. Any 200 plus contact entries are also required to have check sheets (ARRL, op aid #6) for listing or awards. A separate submission for each class (CW and SSB) is mandatory. All entries must be postmarked no later than October 31, 1976, and become the property of the contest committee.

OPERATING AIDS:

Check and summary sheets are available from the VE/W Contest Committee, P.O. Box 2206, Dorval Station 780, Quebec, Canada. Include SASE (legal size), IRCs or *Canadian* stamps with your request. Official sheets are not necessary and reasonable facsimiles are acceptable. No forms will be sent unless sufficient postage accompanies your request.

AWARDS:

Plaques will be awarded to the high scoring Canadian and to the high scoring U.S. entry for both classes, CW and SSB, donated by the Montreal Amateur Radio Club. A minimum of 25 QSOs is required to qualify. Entrants operating under reciprocal licensing agreements are not eligible for plaques.

Certificates will be awarded for the high scoring stations in each section for each class and type of entry providing at least three entries in each class and type are received from each section.

DISQUALIFICATIONS:

If the claimed score of an entry is reduced by 2% or more, logs may be disqualified. Score reductions may be made for taking credit for unconfirmed QSOs and/or multipliers, duplicate contact, or other scoring discrepancies.

The ruling of the VE/W contest committee will be final in all instances of doubt.

SCANDINAVIAN ACTIVITY CONTEST

CW

Starts: 1500 GMT Saturday, Sept 18

Ends: 1800 GMT Sunday, Sept 19

Phone

Starts: 1500 GMT Saturday, Sept 25

Ends: 1800 GMT Sunday, Sept 26

Non-Scandinavian stations will try to work as many Scandinavian stations as possible. The same station may be worked once on each band during the contest. Only CW-CW and phone-phone QSOs are valid. Valid Scandinavian prefixes will be: LA, JW, JX, OH, OHØ, OX, OY, OZ, and SM/SK/SL. Use all amateur bands, 80 to 10 meters. General call will be CQ SAC for non-Scandinavian stations or CQ TEST for Scandinavian stations.

CLASSES:

Single operator, multi-operator/single transmitter, multi-operator/multi-transmitter. Club stations are in multi-operator class even if operated by a single operator. Multi-op/multi-transmitter stations should use separate series of serial numbers for each band.

EXCHANGE:

RS(T) and serial number starting with 001.

SCORING:

Score 1 point per completed QSO. Multiplier is number of Scandinavian countries per band, maximum of 10: LA — Norway, OH — Finland, OHØ — Market Reef, OY — Faroe Islands, SM/SK/SL — Sweden, JW — Swalbard, OHØ — Aland Islands, JX — Mayen Islands, OX — Greenland, OZ — Denmark.

Final score is the sum of complete QSOs multiplied by the sum of multipliers.

AWARDS:

The two highest scoring stations in all operating classes on CW and phone will receive the Contest Award in each participating country as well as in each participating USA call area. Other certificates may be awarded depending on the activity in each country or call area.

LOGS/ENTRIES:

Logs are to be filled in in the following order: date and time in GMT, station worked, sent #, received #, band, note new multiplier. Separate logs for each band are not necessary but a summary sheet showing totals of each band and final score is required. On summary sheet include: callsign, name, full address, and operating class. Separate logs are required for CW and phone. Include any comments on the summary sheet. Also, include a signed statement that you operated according to all rules and regulations and agree to the final decision of the Contest Committee. Logs must be mailed no later than October 15th to SSA Contest Manager SMØDJZ, P.O. Box 3036, S-195 03 Maersta, SWEDEN.

MARYLAND/DC QSO PARTY

Starts: 2300 GMT Saturday, Sept 18

Ends: 0100 GMT Monday, Sept 20

The 10th QSO Party is sponsored again by the Maydale ARS. The same station may be worked on each band and mode for QSO points as well as band multipliers.

EXCHANGE:

QSO number, RS(T) and QTH. MD/DC send county (Baltimore City and Washington separate). Others send ARRL section or country.

FREQUENCIES:

75 kHz from low end of CW bands on even hours, 25 kHz from top of each phone band on odd hours. Try 10 and 15 on half hours.

SCORING:

Score 2 points for each QSO. MD/DC stations multiply QSO points by number of ARRL sections and countries on each band. Others multiply QSO points by number of MD counties and independent cities (24 max) on each band.

AWARDS:

Certificates to top scorers in each ARRL section and country with 100 points minimum on each mode, to top MD scorers in each county with 1000 points minimum on each mode.

ENTRIES:

Use separate logs for each band and mode as well as a check sheet for each band and mode with over 100 contacts. Include a summary sheet showing scoring, name and address, and a signed declaration that all rules and regulations were observed. Send all entries to Maydale ARS, c/o C.E. Anderson K3JYZ, 14601 Claude Lane, Silver Spring MD 20904.

DELTA QSO PARTY

Starts: 2000 GMT Sept 25

Ends: 0200 GMT Sept 27

All amateurs are invited to participate in the 7th annual Delta QSO Party which is sponsored by the Delta Division of the ARRL. Contacts must take place during the contest period with no time or power restrictions. Any station disrupting a working Delta Div traffic net or whose log exhibits obvious irregularities will be disqualified from award consideration. General call will be "CQ DELTA QSO PARTY" on SSB and "CQ DELTA" or "CQ TEST" on CW.

EXCHANGE:

QSO number, RS(T), and QTH: ARRL section for non-Delta, county and state for Delta. Portables and mobiles may be reworked on the same band/mode if changing counties. Stations may be worked once on each band/mode otherwise. Delta Div stations may work other Delta Div stations.

FREQUENCIES:

Novice: 3725, 7125, 21125, 28125.

SSB: 3990, 7290, 14290, 21390, 28590.

CW: 3550, 7050, 14050, 21050, 28050.

SCORING:

Delta stations take number of QSOs times number of ARRL sections (75 max) worked for final score. Outside Delta Div, take number of QSOs times the number of counties worked within the Delta Div (316 max). DX stations may be worked by Delta Div stations but do not count for multipliers.

AWARDS:

Delta Achievement Award — All amateurs contacting 5 hams in each of the 4 states comprising the Division will receive this certificate. Certificates will be awarded to the 3 highest scoring stations in each state within the Delta Div; 4th and 5th will also be given if warranted. Certificates will go to the high scoring station in each ARRL section and country; 2nd and 3rd will be given if warranted. A plaque will be given to the high scoring station both inside and outside of the Division. Plaques will also be awarded to the high scoring portable and mobile stations operating within the Delta Div. A portable or mobile must be operating outside his home county to be eligible. The Lafayette ARC will sponsor the plaques.

ENTRIES:

Logs must include date/time, station worked, exchange, band, mode, and multipliers. Logs must be postmarked no later than October 21, 1976 to be eligible for award consideration. Logs will be returned if requested. Send logs to Malcolm P. Keown K5RUB, 213 Moonmist, Vicksburg MS 39180.

1976 CALIFORNIA QSO PARTY

Sponsored by the Northern California Contest Club

The 1976 California QSO Party will begin at 1800 UTC (11:00 am PDST) on Saturday, October 2, and end at 2400 UTC (5:00 pm PDST) on Sunday, October 3. Of the thirty hour period, the maximum operating time shall not exceed 24 hours. Times on/off must be clearly marked in the log. Each time off shall not be less than 15 minutes.

BANDS:

All amateur bands may be used, and stations may be worked once on phone and once on CW on each band. A California station which changes counties (i.e., a mobile or portable) is considered to be a new station and may be contacted again on each band and mode.

SCORING:

California stations will transmit consecutive QSO numbers and county. Non-California stations will send consecutive QSO numbers and state, Canadian province, or country. California stations may work each other, but contacts between stations outside of California have no contest value. Each complete QSO shall count two points; no credit is allowed for partial contacts. The multiplier for California stations shall be the number of different states plus Canadian call districts (VE/VO 1 — 8, maximum of 8). California stations may count the state of California as one multiplier. Also, DX may be worked for QSO points, but does not count for multipliers. Non-California stations will use as their multiplier the number of different California counties worked (58 maximum). The final score equals total QSO points times the multiplier.

FREQUENCIES:

CW: 1805, 3560, 7060, 14060, 21060, 28060.

SSB: 1815, 3895, 7230, 14280, 21355, 28560.

Novice: 3725, 7125, 21125, 28125.

Try 10 meters on the hour and 15 meters on the half hour between 1800 and 2200 UTC.

LOGS:

Log information should include date, time, band, mode, callsigns

Continued on page 140

Autobiography of an Ancient Aviator

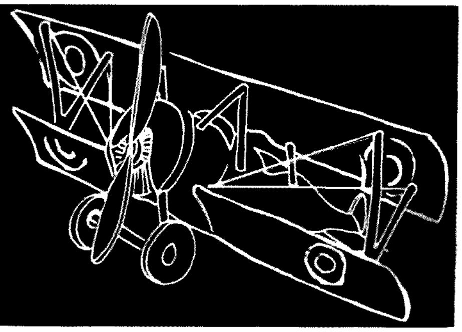

W. Sanger Green
1379 E. 15 Street
Brooklyn NY 11230

TRAGEDY AT TRENTON

In the early 1930s a popular way for various organizations, such as American Legion posts, service clubs, etc., to raise funds was to sponsor so-called "Air Meets" or "Air Races" at their local airports. One of these was a two day affair at Trenton's Mercer Airport on October 19th and 20th, 1930. It carried the prepossessing title of "All Eastern States Air Meet." I was serving as Judge and Starter in the closing event of the meet, a 25 mile race over a triangular closed course with one pylon on the airport field.

Five planes were lined up ready to start when Mrs. Opal Kunz landed and asked to compete in the race. I asked the pilots of the other five planes if they had any objection to her last minute entry and they all agreed to let her compete.

So I started them off at 50 second intervals and went over to the home pylon to make sure that no one was cutting any corners there. On the last lap three ships were bunched on their approach to my pylon. George Zinn in his Taper Wing Waco was low and on the inside, Mrs. Kunz a little ahead of him and on the outside, and Dick Mackie in his Cessna flying a high, safe race about 150 feet above Mrs. Kunz. Just as they got to the pylon, Mrs. Kunz suddenly cut around directly in front of George, which forced him to pull up sharply to avoid hitting the Kunz machine. Just at that moment, however, Mackie was just above. Zinn's Waco collided with the Cessna and cut its whole tail off. Zinn's Waco lost its flying speed and dove in about 100 feet from where I was standing. Mackie's Cessna seemed to fly along straight and level for a few seconds, but when he throttled back it went straight in. Both were killed instantly. From left to right in the photo are the Kunz plane that cut in front of Zinn, the Cessna with its tail cut off, and Zinn's Waco, with pieces of the Cessna's tail over Zinn's engine and, in pieces, behind (photo by S. Dennis Welsh). Pieces were also falling all around me. I'll never forget it.

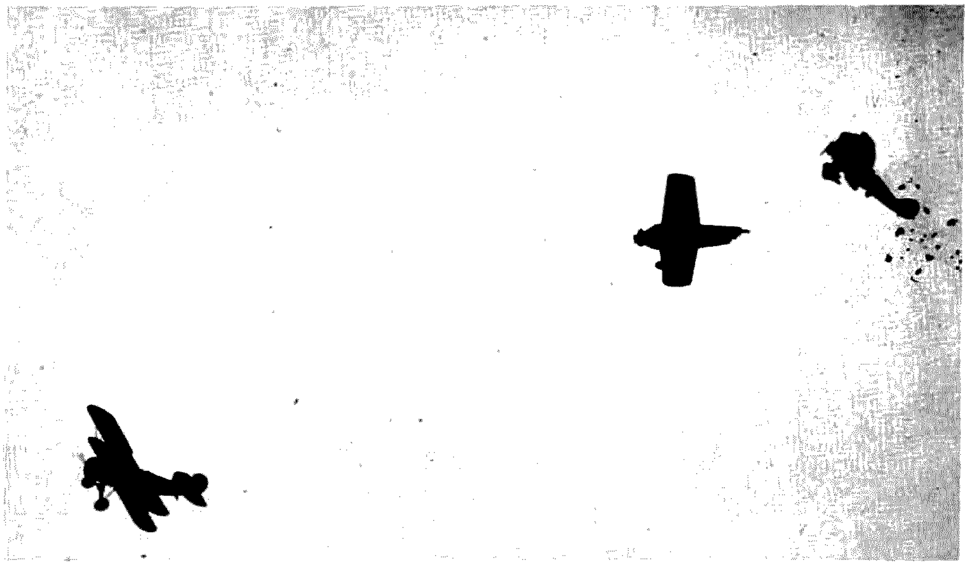

LUDINGTON LINE, ETC.

In early 1931, the New Jersey legislature passed a bill setting up a State Aviation Commission consisting of a Director and five Commissioners. I was one of the five. This Commission had jurisdiction over all aviation activities in the State. Meetings were twice a month. You got a nice commission signed by the Governor, a gold badge of authority, and special auto license plates. Actually there wasn't much for a State Aviation Commission to do, since the Aeronautics Branch of the U.S. Department of Commerce already had jurisdiction over most aviation activities. I resigned my commission in December, 1933, when I changed my official residence to New York State. Just wanted to let you know that I carried a badge for a while.

During the spring and summer of 1931, Gene Vidal, Paul Collins and Amelia Earhart were quite busy getting the Ludington Line ready to start operations. The idea was to furnish a frequent, low fare service between cities on a highly traveled route — in this case, between New York, Philadelphia and Washington. The Ludington brothers furnished the bucks and the "know who," Vidal and Collins, the "know how," and Amelia, the visibility. The original officer lineup was as follows: Chairman of the Board — Townsend Ludington; President — Nicholas Ludington; Executive V.P. — Gene Vidal; V.P. Operations — Paul Collins; V.P. Public Relations — Amelia Earhart; Equipment — 12 Stinson 10 passenger trimotors.

Their "Every Hour on the Hour" service from 7 am to 5 pm, to and from New York and Washington, started Sept. 1, 1930. In the first 14 months of its operations, Ludington Lines carried some 85,000 passengers; in 1931, it carried one fourth of the total passengers of all other airlines in the United States.

In the spring of 1931, Nicholas Ludington developed a case of tuberculosis and had to retire to his house in Santa Barbara, California, for a year in bed. That left his brother, Townsend, who was in very poor health, to direct their investment in the airline. So they hired Jim Eaton from Pan American and installed him as President in the fall of 1931. Eaton then tapped me for Assistant to the President and General Traffic Manager of the line. I was glad to shift from the airport to the airline.

The Stinsons had seats for ten passengers and a crew of one — the pilot. The only radio aboard was an airway radio beacon receiver. As an economy measure, the Stinson's center section 20 gallon tank was filled with aviation gasoline, which was used for take-offs. After climbing to about 1000 feet, the pilot switched to the cheaper automobile fuel in the other tanks. This worked very nicely during the winter of 1930-31, but along in April we had a day of unseasonably hot and humid weather. That day Ludington had five forced landings before they knew what had happend. No damage except for some "seized up" engines and a few scared passengers. It seems that they were a bit late in changing from winter auto gas to the summer type.

A more serious thing happened in November, 1931. In the middle of September, the line introduced a new high speed nonstop service of two round trips a day between Washington and Newark Airport, using a new Lockheed Orion. One of these schedules departed Newark at 4:40 pm, and by the time it reached Central Airport (in mid-November) it was dark. On this flight, Capt. Floyd Cox was on his final approach over a golf course when he "ran out of air" and the unforgiving Orion did half a turn of a spin before hitting the ground. Four passengers, the pilot and the Orion became statistics. Townsend Ludington wanted to shut the airline down the next morning. It was the only accident the line had in its two and a half years of operation.

In March, 1932, our airline headquarters was moved from Philadelphia to the Washington-Hoover Airport, so we rented an apartment out on Conn. Ave. By midsummer, 1932, the "Depression" was being felt by everyone. More and more people were finding air travel, or for that matter, travel of any kind, more than they could afford. So our passenger revenue declined somewhat in spite of the many remedies we tried. Then came the Presidential election of 1932 when FDR swept the country except for Vermont and Maine. As a sort of last resort we made a good try at selling the Post Office Department on putting mail on our frequent service. All to no avail. So Nick Ludington

Continued on page 140

Looking West

Bill Pasternak WA6ITF
14725 Titus St. #4
Panorama City CA 91402

Where were we in the July issue, you ask? Actually, with the July column usually being written in late April and our having to be out of town at the same time, we decided that it would be better to take a vacation for a month than to just write a piece to fill space. Between New York and Dayton we now have a lot to report, and so, on to that wonderful world we love and call amateur radio.

I am beginning to get the impression that I may have opened another can of worms; at least that's the way the mail is running that I am getting about my June "special" on total voluntary coordination (see June 1976 p. 8) and the idea of both offering and/or involving all VHF/UHF oriented amateurs in such a program. There were two specific reasons for my writing that article, plus a third which while left basically unstated is no less important.

First, I, along with many other concerned amateurs, feel that while it would be very nice for the ARRL to officially recognize the work *now being done* by those involved in repeater coordination, it is not for that organization to now, after the majority of the work has already been accomplished, come in and tell the amateur community that they will appoint someone in each area to do this work either in concert with already existing efforts, or by replacing same. In my opinion, the reason that the majority of coordination efforts have been so successful has been that in most cases the people doing the coordinating work have been asked to take on this job by their peers, their fellow amateurs. To carry this one step further, if the League must get itself involved in this work, then it has a sincere obligation to all amateurs, *both League members and non-members alike*, to elect such people in a like manner to the way that League Directors are elected, since any persons elected to this type of position will hold a heck of a lot of power in their hands. I for one would want to be in a position to cast my ballot and help elect such a person based upon what I know about such a person's qualifications, rather than having such "rammed down my throat." Based upon this, I must for now continue to oppose the concept of a League appointed coordinator until such time as the ARRL publically clarifies exactly how such a person will be chosen and by whom, as well as specifically spelling out what his duties will be in relation to already existing coordinating bodies. How will such a person relate to already operational coordinating efforts and, most important, should a disagreement arise between an existing coordinating body and a League coordinator, whose word will be final? At this moment, June 1, 1976, these are questions yet unanswered. I sincerely hope that before you read this, the answers will be in all our hands.

Secondly, today's existing coordinating efforts grew up as a need for "government by crisis." FM and repeaters grew up fast, almost too fast in some places. In a matter of but a year or so, some cities found repeaters sitting on repeaters, repeaters encroaching on area simplex channels, and tempers rising. Order was needed from the chaos and out of this need was born the repeater coordinating council. Now while councils are not perfect entities, at least they are representative of the views and voices of the majority of the FMers in any given administration area. Sure, they make mistakes, but because of the very nature that they are entities of more than one individual, they are less likely to repeat such mistakes. By and large you have to admit that most have done a pretty good job in making things work well. Now with the advent of the multi-mode VHF transceiver — you know, that cute package that lets you run CW, AM, FM, SSB plus other various types of emissions from but one radio — there is a growing trend toward operation on these other modes, especially SSB for "DXing." One of the things that I learned I was right about is that in some areas, two meter SSB is growing so fast that local amateurs are making efforts to set aside specific frequencies for such things as DX calling, local rag-chew calling, tune-up, etc. Sound familiar? Even more interesting, the term being given to these frequencies is "channels." If this is then to be a sign of things to come, do we wait once more until we again need "government by crisis," or do we act now and offer the experience we have garnered from repeater coordination to those expanding into new facets of VHF communication to help them avoid any future crisis? At the moment, one might rightly state that, due to the limited amount of activity coupled with the current high price of such equipment, no such need exists. But, many new amateurs are coming soon into our ranks as a result of the new ARRL training program (many I suspect with eventual VHF interest), and as technology progresses and the market increases, prices may come down on equipment such as this (may I cite the electronic calculator, the digital watch and the under $100 CB radio as examples of what advanced technology coupled with good marketing practice have done for consumer prices) and bring more amateurs to this and other modes. I for one do not believe in forcing any amateur to do something contrary to his or her belief. However, by the same token, I do feel that if the interest is there, then these and all people have a right to have their views aired. Therefore, if amateurs involved in other modes are interested in involving themselves in some form of coordinated band plan, to formulate among themselves a plan for the future that will insure the sanctity of all amateurs, I for one do not feel that they should be relegated to the sidelines just because they do not own a repeater (as you know, "repeaters are the in thing these days"). Yes, repeaters are "in" right now, but in 10 years, what will be "in" then? I for one am glad to see the advent of the multi-mode transceiver for VHF. Slowly but surely it is taking a bit of the pressure off many very crowded VHF repeaters and at the same time adding diversity to the operating habits of many amateurs. Repeaters are great fun, true, but many VHFers fail to realize that there is a whole world below 146 MHz, and that world is an entity unto itself.

As I said, there are three reasons, and the third is possibly the most important of all. If we are to grow, we must develop lines of communication

All it takes to work EME is a station like that of Bruce Sternstein K2RTH and a little patience.

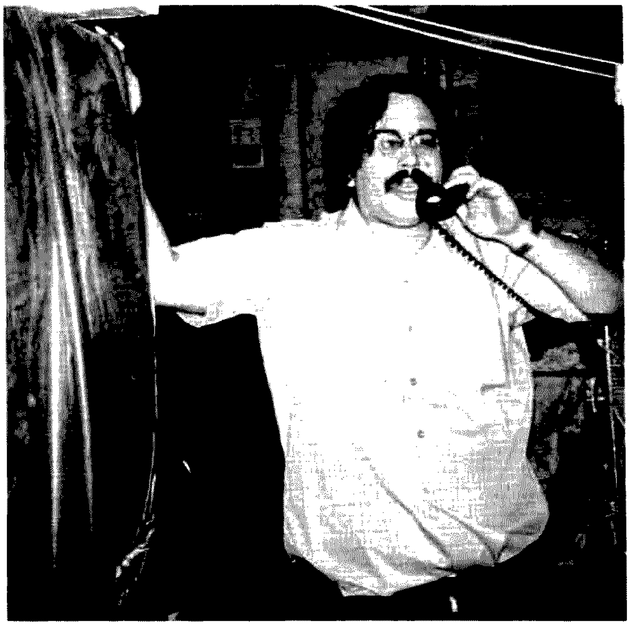

Remember Larry WA2INM who used to write for 73? He is alive, well, on 2 FM, and a champion Siamese cat breeder these days.

that extend far beyond the coverage area of our favorite repeater. We must learn to interact with people whose interests are different than ours and realize that while FM and repeaters are nice, they are but one facet of the overall VHF/UHF picture. If you have never tried working a distant station on 6 meter E or F2, you are missing something. If you have never sat in a round table on two meter AM and been able to talk for 5 or 10 minutes without worrying about timers cutting you off, then you have bypassed a good part of the show. There are people out there, potential friends if you want them. It only takes tuning below 146 MHz to find them.

Now to Southern California and back to that wonderful world of amateur radio. Have you listened to six meters down at the low end lately? Around this part of the country, the DX seems to have started rolling in like in the old days. Most of it is single or double hop E, but as the season progresses there should be some F2 and that will really make it wild. Most of the activity centers around the area of 50.1 to 50.2 SSB, but there is some good stuff on AM as well from around 50.25 up to about .5 or .6. However, the analogy of it being like the "old days" is really not that correct. First, the old days for me were the late 50's and early 60's, but 3000 miles to the east. Therefore, comparisons are a bit hard to make and/or justify. I can tell you that with a ¼ wave ground plane atop the building I am working a bit of the current DX. Since I no longer have my old Swan 250 nor the funds to replace it, I am stuck on medium power AM and CW. For those interested, the six meter station here is nothing more than a Hammarlund HQ110A with an Ameco Nuvistor preamp ahead of it and a choice between an AMECO TX-62 or Knight T-150 transmitter, dependent upon whether I am working the station AM or CW. General band monitoring is done with an old Gonset Comm II. Of note is the fact that most AM users here in Southern California are omnidirectional and vertically polarized, while SSB and CW are horizontal. FM is vertical, with the output of the WA6UJS repeater, 52.525, being the local FM calling channel. Activity here on 6 seems to be on the rise on all modes other than CW, with the majority of CW that I hear being of the MCW variety for code practice.

When you reach a point of "repeater media overload" or more plainly said, the sound of another squelch tale or reset beep will drive you up a wall, six is a real nice place to escape to and lately it seems that more and more people are dusting off their old communicators and 99ers to join the fun. The local people I run into on six are just great, and the best part is that you cannot time out a simplex QSO. After having been wrapped up in repeaters and FM only for a good number of years, getting back on six and back to basics is a real treat. Don't believe me; try it yourself and see.

Last month we mentioned that we would be heading to New York and then on to Dayton for the Hamvention and the festivities there. Next month we will tell you about our impression of the Hamvention, but for now let's all get on board that red and white TWA 707 and go east to the megalopolis of New York. The flight itself must have been good. I am assuming this since I literally slept from Los Angeles to NYC. Sharon told me that around 3 am (we flew the red-eye) we hit a bit of turbulence, but I managed to sleep right through it. I awoke to the sight of the sun coming up over the Atlantic and quickly recorded this event on super 8 movie film. We ate a quick breakfast and then landed at good old JFK International. Right on the numbers for you fellow pilot types.

Sharon's mom and dad were there to meet us and after the customary welcomes and obtaining our baggage (very quickly — one of the advantages of night flying on a medium-sized aircraft), we exited the terminal to be greeted by a blast of 78 degree hot sticky air and the sound of two taxi drivers arguing about who was first in line to pick up a fare. Ah . . . yes, we were in New York! 6:30 am.

The thing that I wondered about most was how well was the right side up split-split repeater plan that they follow working in comparison to the inverted plan that we here in Southern California use. I unpacked my stock FMH that I had equipped with crystals for .25/.85 (WR2ADM) and .13/.73 (WR2AAA) to see what I could hear and to see who was around. It was now about 11 am Sunday morning. There was a QSO on ADM and I recognized the voices and callsigns, so I tried to break. No luck. I figured that the transmit rock was probably off frequency since I did not have the time to net any crystals before the trip. I flipped over to AAA, but heard nothing. Oh well, will have to run into Brooklyn and use INM's counter later. On .52 simplex (in NYC simplex is called "direct") I managed to get a QSO going with one of the locals; we compared notes about two meter activity for about an hour with a number of other stations breaking in and out of the QSO during that time. Soon the friends and relatives started to arrive, including our 6 month old new nephew, Scott, along with his parents (Sharon's sister and brother-in-law), and this signaled an end to my hamming for the day. It was party time and besides, meeting little Scott was the prime reason for the trip. Away with the HT and out with the cameras.

Around four the next afternoon, after visiting my dad and making his Zenith color TV have color again, I stopped over to see Larry Levy WA2INM. You may remember Larry as he was one of *73*'s first technical writers in the 60's. After a cold one to wash away the New York City air pollution, which in my mind is far worse smelling than what LA is famed for, we adjourned to his basement

A sign of things to come? ICOM West representative shows new IC-202 2m SSB portable at SAROC '76. Is it the thing that may replace today's FM hand-held? Who knows?

workshop to count Hz's. Hmmmmm . . . what's this? Seems as if both my .13 and .25 transmit crystals were stone dead. A few more tests showed that my .73 receive had met the same premature fate. Since FMH rocks are a scarce commodity in NYC, Larry graciously offered to loan me his TR-22. Again, this was a stock unmodified TR-22 purchased in 1971. I stress the point unmodified since such a radio will perform without any problem in and around LA under the inverted split plan. To say that the early TR-22s were somewhat broad in the selectivity department, especially by today's standards, would be a fair assumption. This radio was equipped with four repeater pairs plus .52 and .94 simplex and was set up in my father-in-law's Chrysler using a borrowed ¼ wave gutter clip supplied by "Uncle Lou" K2VMR.

No problem on .25/.85. We were staying with Sharon's mom and dad in Valley Stream and were but a stone's throw from the location of WR6ADM. The welcome we were given on that repeater was the warmest we found anywhere on our trip. ADM is sponsored by LIMARC, the Long Island Mobile Amateur Radio Club, and being with LIMARC people is to me very much like being home on WR6ABB with PARC people. In fact, while it has received no publicity to date, last January LIMARC and PARC became sister clubs on an informal basis as a gesture of goodwill between amateurs separated by the miles as part of our nation's bicentennial celebration. In fact, I believe this is probably the first formal public announcement of this happening. The two clubs call it "Hands Across A Nation in '76"; however, I was asked while in NYC to bring word back to PARC that LIMARC would like to make this informal tie permanent. I suspect it will be.

Slipping over to .28/.88, I accessed the Staten Island repeater and ran smack dab into a long time friend of mine Andy Feldman WB2FXN. My, how time flies; the last time I had spoken with Andy was just after he and Eileen had gotten married. Now they have a kid of their own and have moved to a new QTH over in Jersey. I listened for a while after signing with Andy and noted that something on an adjacent channel was being heard by the TR-22. Never did identify it though. On .13/.73 I found the worst adjacent channel problem noted. A repeater in Selden, Long Island 15 kHz away was giving AAA a good run for its capture money. AAA, the old WA2SUR system, is located in lower Manhattan and previously I had never heard any problem using my own TR-22, which had come from the same lot number as Larry's. The people on that Selden repeater seemed to be such a nice bunch that I really wished I had some rocks or a synthesized radio with me so that I could have met them. Think I really missed something good. I was not able to either access or hear the Greenbrook, New Jersey repeater on .34/.94, though in the past I had been able to at least hear it in Valley Stream. Later I was told that it had gone "PL" and activity on it was low. This report was never confirmed. I did, however, hear

some .94 simplex activity both on Long Island and while mobile in Brooklyn; I had a number of good QSOs with some old friends. I do think in retrospect that the WA6 callsign and the 10 codes that I have become used to using out here did shake up a number of people.

Anyhow, if I were to judge solely by what I heard on .73 with a five year old radio, I would not be making a really fair analysis. I can tell you that the stock TR-22 that I have here now (that was also purchased in or around 1971) works flawlessly in LA using the inverted split-split plan. However, I would really like someday to see someone take a good synthesized "amateur type" popular radio such as the Icom 230, or the KDK, or a Clegg FM-DX, and channel by channel evaluate both the right side up and the inverted split-split plans. It would require an amateur who happens to own such a radio with both a fat wallet to cover expenses and about a three week vacation. If I had the bread, I probably would make the time, but alas, in my present financial situation that cannot be. In reality though, such a comparison done in the major high activity areas such as NYC and LA where split-split systems exist is the only way we will ever know which method is best. I can tell you what I found, and I can tell you of the success we have had out here with the inverted splits, but until the time that such a channel by channel comparison is actually made, and made from a user standpoint with a fairly modern day user type radio, it is unfair to make any final decisions or recommendations. Any takers out there for such a project? I guarantee to publish the results. Perhaps this is another good reason for the establishment of a national coordinating council that is technologically and financially able to undertake such a research project.

Two of the people that we were happiest to see were Lou Belsky K2VMR and his lovely wife Linda. It was Lou's guidance as trustee of my old WA2ZWP, now WR2ACV, repeater that brought it back to life and built it into one of the most popular and populous open systems in New York. I discussed doing an article with him about our cross country trip in 1970 just at the time that repeaters were starting to take hold but six meter SSB was still king. From that discussion came the idea for a two or three part article you will be seeing in the near future titled "Lou, Bugsy and Me" or "Can a VW Bug Really Go 3000 Miles Between Gas Stops?" Anyhow, being able to spend time with Lou and Lin were very happy moments for Sharon and myself. Currently, Lou's big amateur radio project is putting together the Amateur Radio Communication Effort for the annual NYC Salute to Israel Parade up Fifth Avenue in June — quite a monumental task in itself.

We also got our first exposure to the art of EME or moonbounce communication thanks to Bruce Sternstein K2RTH. Bruce just happens to live directly across the street from Lou and Lin in Franklin Square, LI, and his antenna array is a bit hard to miss. We meandered across the street to Bruce's place and found out first hand what EME is all about and were thoroughly impressed. As soon as I have my own home, that's an art form I personally want to involve myself in. EME is not just another way to use amateur radio; the skill required to be really successful at it places EME in the art form class.

We had a chance to talk with Abe Schwartz WB2PQR about a project that he is working toward: a user programmable repeater using a microprocessor. The idea is to program specific needs of a given user into the microprocessor, assign each user a specific identity code and have the user punch up his code to have his specific needs performed automatically. With the amount of information that can be stored and recalled at will, it would be possible to perform tasks such as transferring the system to a directional antenna that would automatically adjust to a predetermined direction, store telephone numbers for autopatch service, and a myriad of other things. While strictly in the planning stage right now, Abe hopes to make the thing a reality in the not too distant future, and I got him to agree to drop me a line from time to time and keep me informed of his progress. The concept, if feasible, really interests me and I suspect it might interest you as well.

Southland Hams Win One: California Decides Not To Raise Cost of Ham Plates

Sometimes a letter writing campaign coupled with the proper form of education can win out, as was shown recently in the state of California. For many years only a nominal $3 fee was necessary in addition to the normal license plate fee to obtain amateur radio callsign plates. Then recently a re-evaluation was undertaken by the state that would have meant a reclassification of amateur callsign plates to the status of what is termed "vanity plates," i.e., personalized license plates of one form or another. This would have meant a significant increase in both the cost of initially obtaining such plates and in the cost of yearly renewal.

Rather than "flying off the handle," amateurs in California initiated a letter writing campaign specifically aimed at educating the state legislature as to the important part that the state's amateur radio community plays in regard to both public service and as a ready source of trained volunteer communications personnel in case of disaster. It was pointed out that rather than being simply a sign of one's vanity, the amateur callsign appearing on a license plate is an easily identifiable method of determining who the aforementioned emergency communicators are should ever the need arise.

As a result of this effort, the Honorable Michael Wornum, Assemblyman from the Ninth Assembly District and Chairman of the Committee reviewing the standards for issuance of automobile license plates, has amended this bill (California Assembly Bill 4271) so as to exclude amateur radio callsign plates from any increased fees. We at *73* feel that he deserves a thank you for his action on behalf of the California amateur radio community. It is apparent that Assemblyman Wornum is a public servant who listens to his constituency.

New Products

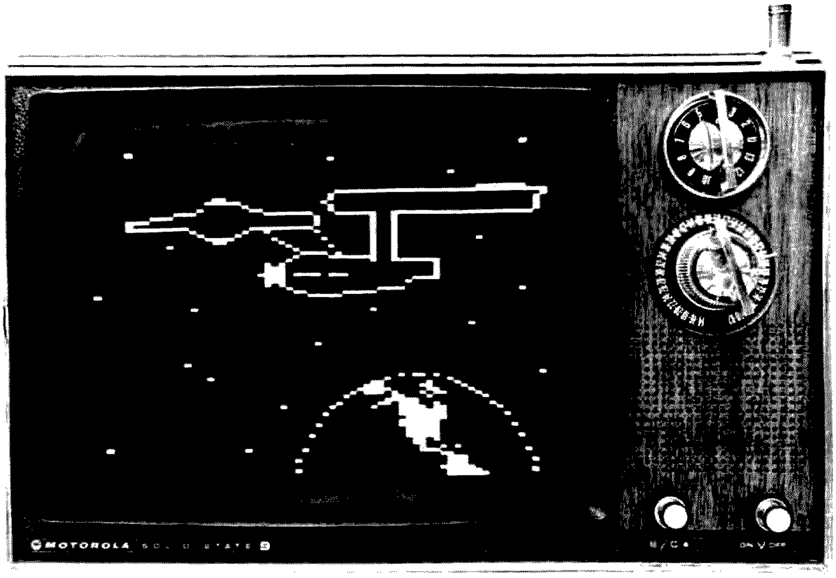

LOW COST GRAPHICS TERMINAL KIT

Southwest Technical's GT-61 Graphics Terminal kit is a low cost graphics unit designed for hobbyists or budget-minded commercial applications. The 9½" x 13" PC board contains all the electronics necessary to display an array of cells 64 wide by 96 high on a standard video monitor or modified television set. The graphics terminal contains its own 6144 bit static memory and thus may be driven by any computer system having a TTL compatible 8 bit parallel interface. The unit is available in kit form only and is sold less power supply, chassis, and monitor for $98.50 postpaid in the US. Delivery is 30 days. Southwest Technical Products Corporation, 219 W. Rhapsody, San Antonio TX 78216, (512) 344-0241.

B&K-PRECISION INTRODUCES NEW LOW COST 3½ DIGIT MULTIMETER

The Model 283, a new 3½ digit multimeter priced at $170, has been announced by B&K-PRECISION, Dynascan Corporation.

The Model 283 uses high intensity, high reliability LED displays, 0.41" high, that can be easily read in brightly lit rooms at a distance of at least six feet, according to the manufacturers. It measures dc volts, ac volts, dc current, ac current and resistance. A special low voltage circuit permits measuring resistance of tran-

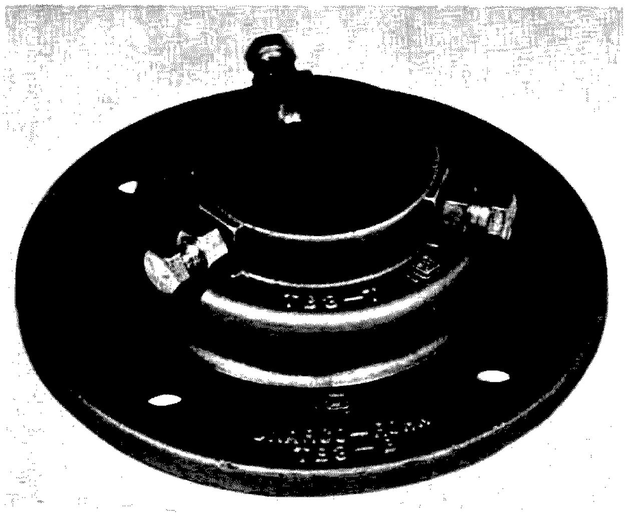

sistor-shunted resistors.

The Model 283 has 100% overrange capability on four ranges, so that one can read to 199.9 on a scale that is normally set for 100.0 maximum. Out-of-range is indicated by a flashing digit and three zeros. All readings have an automatically positioned decimal point.

There are 4 dc voltage ranges, with ±0.5% accuracy on the 1.000, 10.00 and 100.0 ranges and ±1.0% on the 1000 V range. Polarity change is automatic. Four ac voltage ranges have ±1.0% accuracy on 1.000, 10.00 and 1000.0 ranges and 1.5% accuracy on the 1000 V range. There are four ac current and four dc current ranges (±0.1000, 10.00, 100.0 mA) with the similar accuracies. The six resistance ranges, 100 Ohms, 1k, 10k, 100k, 1000k, and 10 megohms, have ±1% accuracy, except top range, which is ±2%. Input impedance is 10 megohms on all voltage ranges.

Overload protection is provided, up to 1000 V on the Ohms, 1500 V on the voltage ranges, and 3 A on current shunts.

An optional battery pack provides 8 hours operation on an overnight charging. Batteries also charge when the Model 283 is used on a 110 V ac line.

The B&K-PRECISION multimeter weighs 3 pounds and measures only 9 x 7 x 3.6 inches. With battery pack, its weight is 6 pounds. The Model 283 and accessories are available from B&K-PRECISION distributors.

For additional information, contact Myron Bond, B&K-PRECISION, Dynascan Corporation, 6460 W. Cortland, Chicago IL 60625, (312)-889-9087.

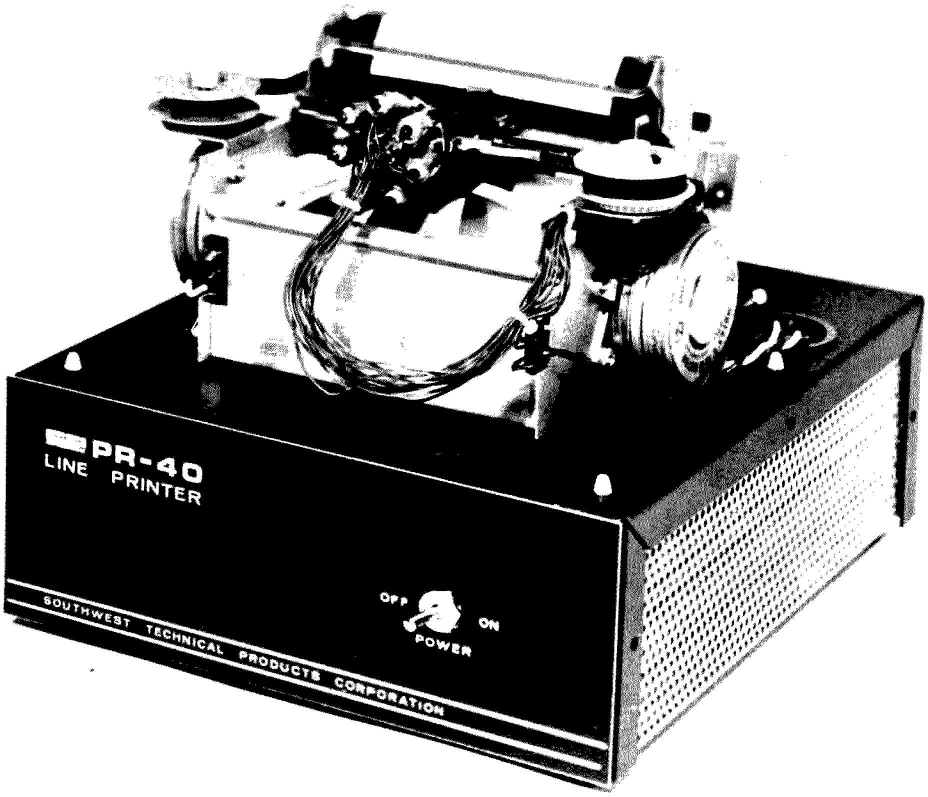

NEW THRUST BEARING

Unarco-Rohn, Division of Unarco Industries, Inc., Peoria, Illinois, has just introduced a new thrust bearing (TB-3) for mounting antennas that is superior to anything on the market today. It is of heat-treated cast aluminum, for extra strength. The bearing incorporates 30 stainless steel ball bearings in a race that is protected from the elements, permitting freer movement at all times. Three lock nuts fasten the antenna mast securely in position. This relieves the weight of the antenna on the rotor, and at the same time allows an exceptionally free turning movement.

Unarco-Rohn is one of the country's leading integrated tower manufacturers. Services include tower manufacturing, engineering, fabrication, in-house galvanizing, site construction and supervision.

LOW COST ALPHANUMERIC PRINTER KIT

Southwest Technical's PR-40 Alphanumeric Printer Kit is a 5X7 dot matrix impact printer similar in operation to the well known Centronics printers. It prints the 64 character upper case ASCII set with 40 characters/line at a print rate of 75 lines/minute on standard 3-7/8" wide rolls of adding machine paper. One complete line is printed at a time from an internal forty character line buffer memory. Printing takes place either on the receipt of a carriage return or automatically whenever the line buffer memory is filled.

The printer is available in kit form only and includes the assembled print mechanism, chassis, circuit boards, components, 120/240 V ac – 50/60 Hz power supply, assembly instructions, one ribbon and one roll of paper. It sells for $250.00 ppd. in the US and delivery is 30 days.

Wayne Green W2NSD/1

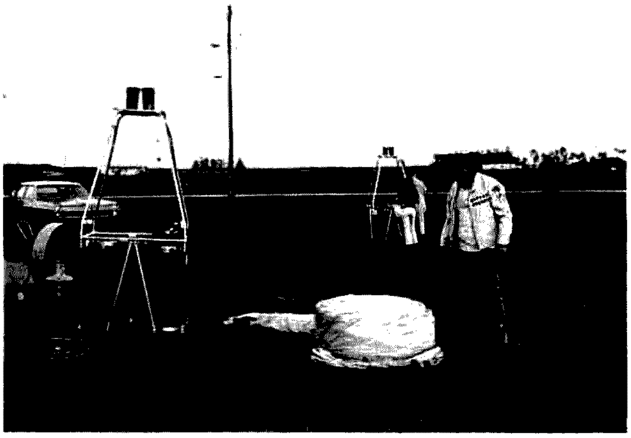

Captain Crunch gets ready to unwrap his balloon. It's in a long thin bag for protection. At the left is the gondola, which breaks down to two parts for hauling around ... the gasoline-powered fan for starting the balloon ... and a spare propane tank. In the background, the second balloon for the First Ham Radio Two Meter FM Two-Way Balloon Contact is being assembled. This is the balloon in which Wayne will go up, manned by John Mickel.

Balloon to Balloon!

--another 73 first

Ed Doll W4KLM helps Will Thrasher W4SAC (Captain Crunch) with the balloon, while Bill Otting and Walt Farley K4QE pull the sleeve off the balloon.

Laura Thrasher (ex-KN3DHI) fastens wires from balloon to gondola while K4QE holds balloon.

Early on the morning of May 18th, two giant balloons rose from the outskirts of Homestead, Florida, lifting two radio amateurs into the skies so that they could establish a new first ... aerostat mobile amateur to aerostat mobile amateur two-way communication.

It all started a few weeks earlier when a letter from Will Thrasher W4SAC (Captain Crunch) arrived at the *73* HQ in Peterborough suggesting the possibility of a new first for amateur radio ... communications between balloons. Why not! I called Crunch and asked when I should be down for the event ... cameras and courage in hand.

On the evening of the 17th Sherry Smythe and I headed for Miami, armed with cameras, lenses, HTs, and a CB rig for the rented car. The CB rig helped us to keep track of traffic on the hour

Wayne holds balloon envelope while Will pulls off the sleeve.

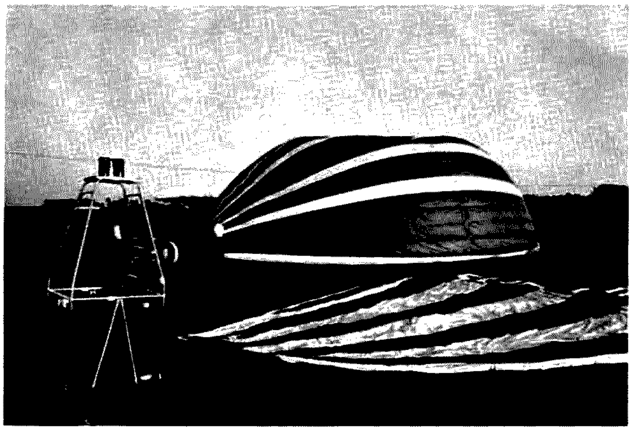

A small gasoline engine-powered fan is used to start inflation of the balloon.

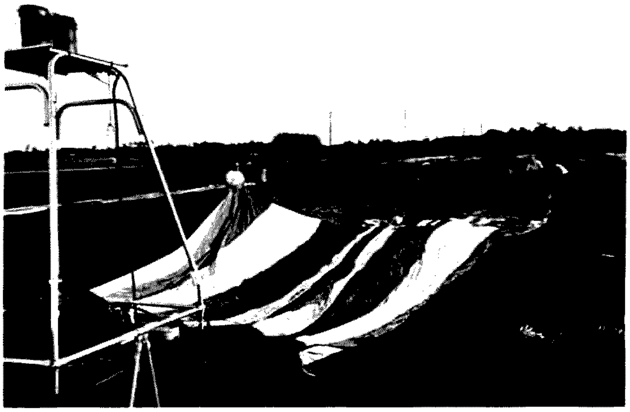

Balloon envelope is spread out and ready to be inflated.

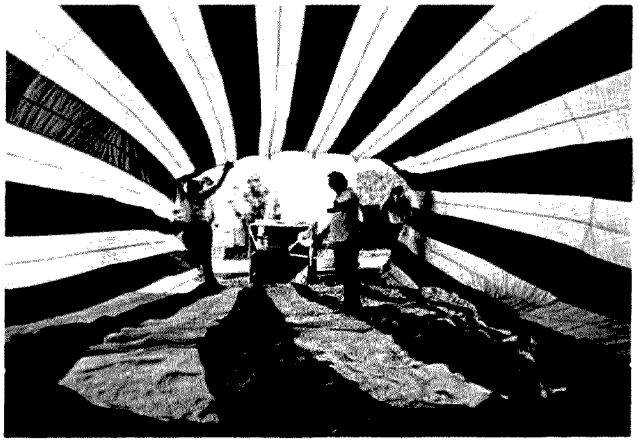

How the balloon looks from inside . . . W4SAC on the right, K4QE on the left.

drive to Homestead . . . and to find the motel when we got there.

We all assembled at Captain Crunch's home the next morning a little after 6:00 am. Present were Will's wife Laura (KN3DHI), the first licensed lady balloonist in Florida . . . Walt Farley K4QE . . . Ed Doll W4KLM (retired from AT&T) . . . Captain Crunch (the second licensed balloonist in Florida) . . . John Mickel, a Florida smokey with a CB handle of Officer Friendly and a car license of FUZZ. John was taught ballooning by Will . . . and he, in turn, taught Laura. John's chase car driver was Nancy Fortier, a Delta Airlines stewardess, who is working on her balloon license. Bill Otting, Will's maintenance man, also helped get the balloons ready.

The balloons were packed in very large hassock-type bags. Once out of the bag and stretched out on the grass, they were amazingly big . . . about 70 feet long. It took three people to pull the protective sheath off the multicolored nylon material. The gondolas were quickly assembled, despite the multitudes of gnats, which were almost thick enough to drive off the mosquitos . . . but not quite. The two propane tanks were put into each gondola and strapped into place, with a pipe going to the burner located just below the open bottom of the envelope.

A gasoline-powered fan was set up to blow air into the envelopes and they quickly billowed out . . . with the help of my running around inside one pushing the material out to catch the air. Once the envelope was fairly full of air from the fan, the propane flames were turned on and shot into the envelope. With this the balloon soon righted itself and had to be held down, while we waited for the second balloon to be blown up and heated.

Soon we were ready to go. I stopped taking pictures of the preparations, gave one HT to Sherry for Will to use . . . she was going up with him . . . gave one to W4KLM to coordinate the ground support (they had to follow us as we floated along so they could bring the balloon back after it landed). Sherry also had a camera. John had his balloon about ready to take off so I hopped aboard, camera in one hand, lenses in my pockets, HT in the other hand, and trying to hold onto the gondola with an elbow as John turned on the propane. The air in the balloon has to be about 100° hotter than outside to get enough lift. It's a little scary with the flames shooting five or six feet up into the nylon balloon, roaring so you can't talk.

We lifted off at 7:22 am, just as smooth as you could ask. John said not to worry about the trees we were dragging through . . . so I didn't . . . it was just the top branches anyway. Soon we were several hundred feet up, with Crunch's balloon just a short way behind us. We'd go up and up . . . then start to settle back down again. As we came down John would give a blast of the propane and we'd slow down . . . then go back

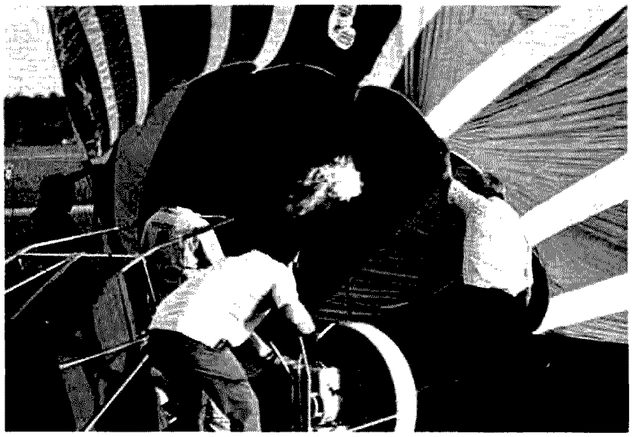

Once the envelope is inflated, the air has to be heated. On the left is Nancy Fortier, who did the chase car routine for Wayne's balloon.

up again . . . bobbing across the landscape.

We soon had our two-way amateur radio contact in the bag . . . 146.52 MHz FM . . . and two-way with the ground to boot. Once that was done, I switched to some of the nearby repeaters and made a few contacts via them as a bonus.

On one of the descents we came down toward a field where a bunch of women were picking okra. We yelled hello to them and arranged to come down close enough so that they could throw up an okra to us. It was a fairly open field with a road leading into it, so Crunch decided to end his flight there. He touched down gently and that was that. John and I went on a few miles further, with Nancy following in the FUZZ car. We eventually spotted a nice clear field ahead and plopped quietly into the middle of an exercise ring for horses.

Once down you have to collapse the envelope as quickly as you can so it won't be caught in a sudden breeze and drag you. We took our time . . . gave the balloon a little blast to make it lighter and walked it a couple hundred feet over to the road to deflate it there. You pull a ring and that opens up the whole top of the balloon, letting the hot air out.

The only damage done was when a propane bottle was dropped on the instrument panel as the gondola was being packed for return home. The instruments are an altimeter, a rate of climb indicator, a temperature gauge, and a watch. The thermometer got it good from the propane tank and needed at least a new cover.

Back at Crunch's home we played a tape of the morning's events and ate doughnuts. Laura has a fan-

As the air heats up, the balloon rises . . . here is John Mickel (Officer Friendly on CB) getting just the right amount of hot air into the balloon to keep it upright yet not have it take off before everyone is ready.

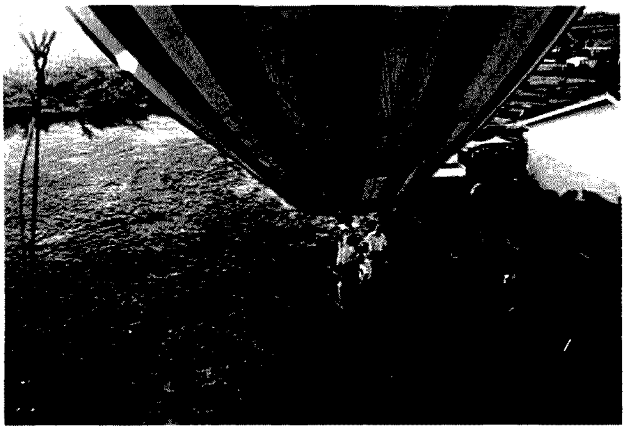

The W4SAC balloon about ready to take off, with 73 staffer and Marketing Manager Sherry Smythe just getting into the gondola.

Here's the W4SAC home and the second balloon about to take off for the historic ham QSO.

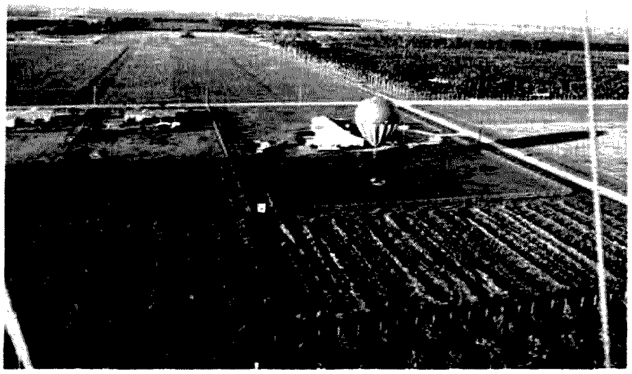

We're both airborne and the contact is made . . . W4SAC aerostat mobile four with W2NSD aerostat mobile four . . . roger over and out.

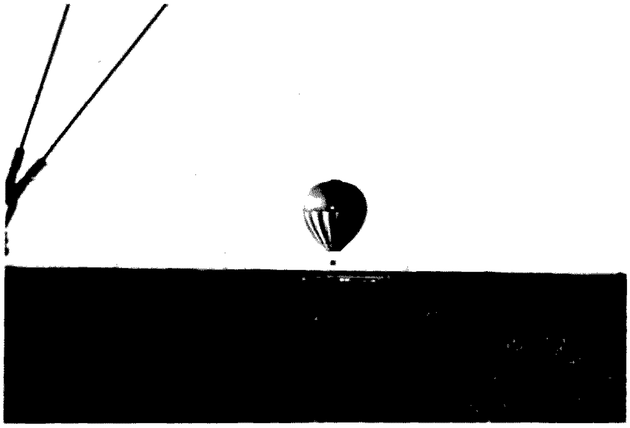

The two balloons rise and fall with the air currents and propane heating flames, making their way across southern Florida. Will Wayne be blown out to sea and never heard from again? No . . . Wayne is busy making contacts via local repeaters with his HT . . . keeping in touch with the ground crew . . . and talking with the W4SAC/4 balloon. Maybe next time.

73 staffer Sherry Smythe helped take the pictures for the article, including the beautiful cover shot. Working at 73 is not all on the level . . . sometimes it means odd things like ballooning.

Crunch lives up to his name by coming down solidly in an okra field a few miles from his home. By using just enough flames to keep the hot air right, it is possible to come down very gently.

tastic organ setup and she played some music for us . . . in all, it was a most successful day.

Balloons are fun . . . no question about that at all. They run from $5000 on up, and can stay in the air three to four hours on the two propane tanks. The balloon

Here's Will with his trailer . . . it carries the balloon and gondola for return to home. Will is the chap to see if you are interested in getting into the ballooning hobby . . . or maybe in renting a balloon for a hamfest.

W4SAC and 73's Marketing Manager Smythe wave as the first balloon-to-balloon ham contact is completed.

has a diameter of about 50 feet and goes up about 70 feet. It has a ceiling of about 20,000 feet . . . but this is higher than you want to go without oxygen. They'll lift about 400 pounds.

While you don't have a lot of control over which direction you are going to go . . . you go with the wind . . . you can control your speed quite a bit by picking an elevation which has the winds you want. We were able to slow down and wait for Captain Crunch and Sherry to catch up with us by staying low and waiting for the higher winds to bring them up to us.

I sure want to thank Will for setting up the event. He even brought in a second balloon from Atlanta for it. And I want to thank Laura, Walt, Ed, Nancy and Bill for helping out. Both Sherry and I had a wonderful time. Sherry had the same problems I did . . . she had binoculars around her neck, an HT in one hand, a camera in the other . . . and then she was told to hold on to the gondola!

What with trying to keep in touch with Captain Crunch in the other balloon, Ed on the ground, hold onto the gondola, and take pictures with various long lenses, I had my hands and knees full . . . and pockets. When you're about 500 feet up in the air you have a sort of automatic need to hold onto something. Tight. ■

Joseph M. Boyer
17302 Yukon, Suite 63
Torrance CA 90504

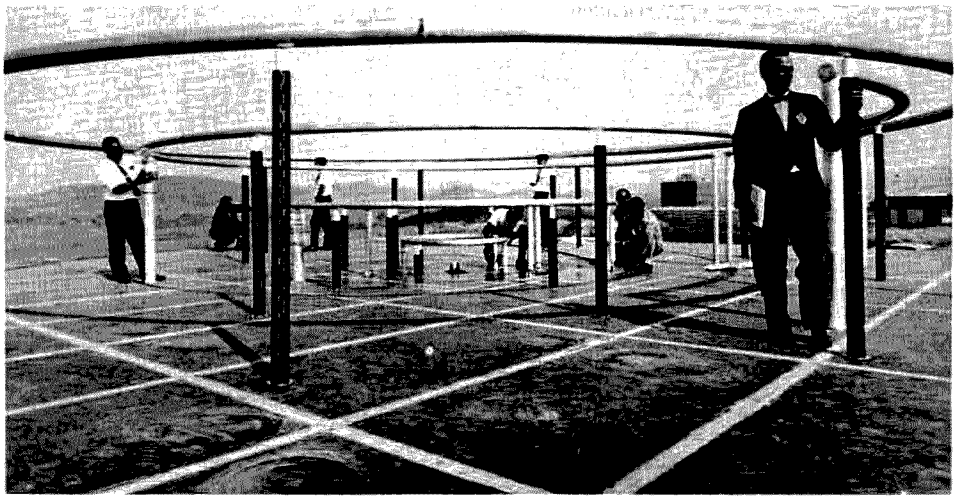

Northrop Corporation Photo

The Surprising DDRR Low Noise Antenna

--part II

The intent of this two part article is to describe certain modern transmitting antennas of small electrical size useful to the radio amateur who has limited outdoor space available in which to erect radiators of conventional design. All the antennas discussed, such as the DDRR, LPT, and magnetic transmitting doublet, are forms of radiating rf transmission lines. Each is capable of rapid frequency tuning using very low loss variable condensers. Most are narrowly banded in frequency response due to small electrical size and low radiation resistance; this seeming limitation, however, turns out to afford a substantial improvement in signal-to-noise ratio during the receiving phase of the two way communications process.

By the end of Part I the reader had been provided with the relations needed to design a DDRR antenna for optimum tuning across any amateur band (or a bit more), and to match it directly to standard fifty Ohm coaxial feed transmission line to obtain low vswr across an entire ham band. Here the DDRR design will be completed and, in the process, any need for use of space-consuming radial wire ground plane systems will be removed.

Radiation Resistance of Small Antennas

Radiation resistance R_r can be defined in terms of the amount of energy an antenna loses per rf cycle to a distant space region occupied by all the other antennas in the universe (as compared to that supplied to its input terminals). The radiation energy loss must be related to a "distant space" region because in its "near space" an antenna also *stores* input power within a field surrounding its conductors. Such stored field power exists in the form of a standing wave,

the energy merely flowing back and forth between the antenna and near space during each rf cycle; this space standing wave antenna field is very much like that found very close to *open wire*, rf *transmission lines.*

As the size of an antenna shrinks in comparison to the wavelength λ at which it is operated, less and less of its supplied power is lost as radiation per rf cycle into the far space, and more and more is stored in its near zone standing wave field. By the definition given here, then, the radiation resistance R_r of electrically short antennas is small in value. Although the exact EM field process which creates antenna radiation is a complex subject, it is possible to give the radiation resistance of monopole antennas whose length h° is equal to or less than thirty-six electrical degrees quite simply. We will start off by giving two *engineering*-type axioms:

1.0. When an electrically short monopole antenna operating either over ground or its electrical image is brought to electrical resonance *solely* by placing a reactance jX_1 in series between its base and ground to cancel out the antenna's self-reactance, such an antenna possesses a current distribution yielding *minimum* radiation resistance in relation to its conductor length h in degrees.

2.0. When an electrically short monopole antenna operating either over ground or its electrical image is brought to electrical resonance *solely* by placing a reactance jX_2 in parallel with its top end and ground to cancel out the antenna's self-reactance, such an antenna possesses a current distribution yielding *maximum* radiation resistance in relation to its conductor length h in degrees.

The term "engineering" is used here in giving the two axioms because they are limited by the following premise: The loading reactances jX_1 or jX_2 are not themselves sources of wave radiation which is in phase opposition to the radiation produced by the short antenna. With such a restriction understood, the current distributions for these two types of reactance loading limits of the small antenna are given in Fig. 1 (a, b). Each antenna's current distribution is assumed to be in the form of a sine wave. However, the shape of the current distribution in each antenna is straight-sided because a plot of the function sine h° over a distance less than thirty-six degrees produces a graph which "looks" like a straight line.

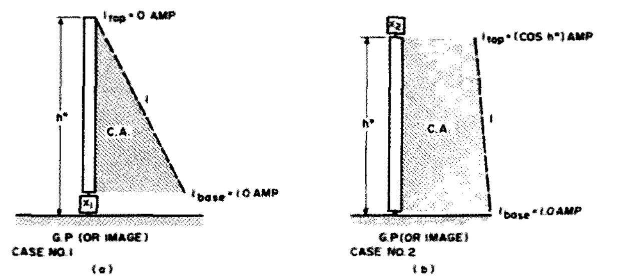

Fig. 1. Limiting cases of current distribution along electrically short, cylindrical monopole antennas resonated solely with (a) base reactance and (b) top reactance. Height h° is equal to or less than thirty-six electrical degrees.

In Fig. 1(a) for the short monopole solely base-loaded, the antenna current goes to zero magnitude at its conductor top end because at this point it is "open circuited" into free space. At the base of this monopole the *relative* resonant current amplitude there is assumed to be equal to 1.0 Amperes. Inside the straight-sided current distribution shapes of both antennas, the shaded region is labeled CA. This means current area or, more specifically: *relative current distribution area.* With the antenna height h° given in degree units and the current relative amplitude given in Amperes, these relative areas CA have the dimensions of *degree-Amperes.* For the solely base-loaded monopole of Fig. 1(a) (case 1.0), the triangularly shaped current distribution area CA is found from plane geometry as

$$CA_{(\text{base loaded})} = \tfrac{1}{2}\left[h^\circ\ (1.0\ \text{Amps})\right]\ \text{degree-Amperes} \qquad (2\text{-}1.0)$$

For the solely top-loaded monopole of Fig. 1(b) (case 2.0), the trapezoid-shaped current distribution area CA is

$$CA_{(\text{top loaded})} = \tfrac{1}{2}\left[h^\circ\ (1.0\ \text{Amps} + \cos h^\circ\ \text{Amps})\right]\ \text{degree-Amperes} \qquad (2\text{-}2.0)$$

In this case the current amplitude at the antenna conductor top is no longer zero Amperes; with resonance produced solely by the top reactance jX_2, the current I_{top} now equals (cosine h°) Amperes in relative value. The current I_{base} is still assumed to be equal to 1.0 relative Amperes. In terms of such *relative*[1] current distribution area CA, the radiation resistance R_r of short monopole antennas of height h° equal to or less than thirty-six electrical degrees is just

$$R_r = 0.01215\ (CA\ \text{degree-Amperes})^2\ \text{Ohms} \qquad (2\text{-}3.0)$$

Electrically short doublets in free space, of total length 2h°, have a radiation resistance R_r twice as large as that given by (2-3.0) when each "monopole" half of such doublet is loaded as stated here. Equation (2-3.0) is important in the design of electrically small antennas because it emphasizes that radiation resistance R_r is *not a constant* for a given monopole height h°, but may be increased by *control* of the current distribution along the short antenna.

Radiation Resistance of the DDRR Antenna

The reader may recall from Part I that the electrical height h° of the six foot vertical post conductor in the 75 meter band DDRR antenna was 8.78 degrees at 4.0 MHz. Viewed as a monopole antenna, Schelkunoff's equation (1-2.0) gave the average characteristic impedance of the four inch diameter conductor transmission line as K_m = 197.57 Ohms. It is noted that K_m does not enter into the expression for radiation resistance. If we wished, however, to use just such a post itself as a simple cylindrical monopole over ground, K_m would come in handy in determining the value of the reactance jX_1 needed to solely bring it to resonance at 4.0 MHz by *base loading:*

$$jX_1 = jX_{coil} = jK_m \cot h^\circ = j197.57 \cot 8.78^\circ = +j\,1{,}279.18\ \text{Ohms}$$

For the vertical post, used as a simple monopole antenna, (2-1.0) gives us the CA for this case as

$$CA_{(\text{base loaded})} = \tfrac{1}{2}\left[8.78^\circ\ (1.0\ \text{Amps})\right] = 4.390\ \text{degree-Amperes}$$

The radiation resistance for this case would then be

$$R_{r(\text{base loaded})} = 0.01215\ (4.390\ \text{degree-Amperes})^2 = 0.234\ \text{Ohms}$$

Now, if the missing elements of the DDRR antenna system consisting of the horizontal ring transmission line section of S° and the tuning condenser C were restored and adjusted to resonate the DDRR at 4.0 MHz, we would have case 2.0. As cosine 8.78 degrees equals 0.988, this becomes the relative magnitude of I_{top} in Amperes, giving for CA:

$$CA_{(\text{DDRR})} = 8.729\ \text{degree-Amperes} \qquad (4.0\ \text{MHz})$$
$$R_{r(\text{DDRR})} = 0.926\ \text{Ohms} \qquad (4.0\ \text{MHz})$$

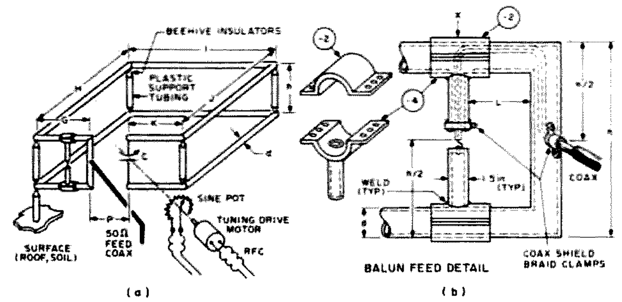

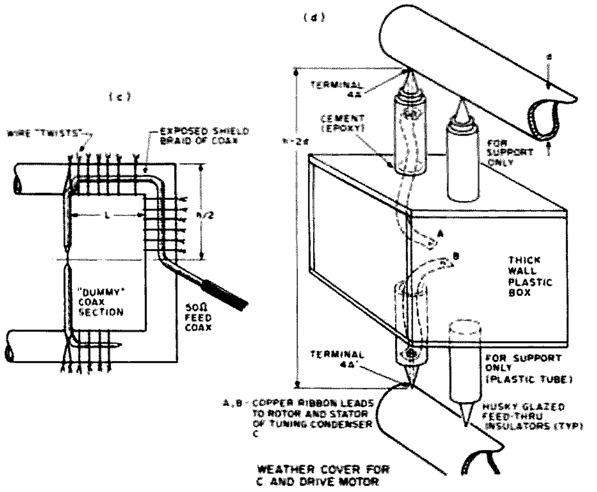

Fig. 2. (a) Construction suggestions for a ham band, "doublet" DDRR antenna. (b) Permanent unbalanced-to-balanced feed. (c) "Jury rigged" coax feed to find fifty Ohm input point X. (d) Suggested heavy plastic weather housing for tuning condenser, motor drive, and sine potentiometer; control wires to shack are brought out of box at right angles to DDRR conductors.

Needless three decimal place accuracy was used here because the current ratio I_{top}/I_{base} of the DDRR at 4.0 MHz closely approaches unity, giving almost a four-to-one increase in radiation resistance over the same monopole antenna solely base-loaded to resonance. A four-to-one increase in radiation resistance R_r represents the theoretical upper limit attainable for a short monopole antenna as compared to its R_r when solely base-loaded. Does that mean that the DDRR antenna actually reaches the theoretical limit of loading for short antennas? Not quite! This is where the limitation placed on the axioms comes in; because the DDRR tuning condenser C has displacement current I_{cap} flowing through it in proportion to its capacity setting, it represents a concentrated radiation source itself. As the current flow I_{cap} is in the *opposite* direction to the conduction current I_{base} in the vertical post monopole, the total effect is to "drive down" the effective radiation resistance R_e of the DDRR as a system. This effect is represented by the equation

$$R_e = R_{r(DDRR)} \left[1 - \frac{I_{cap}}{I_{base}} \right]^2 \text{ Ohms} \quad (2\text{-}4.0)$$

The detrimental effect on R_e of the DDRR represented by (2-4.0) is negligible at 4.0 MHz due to the high reactance $-jX_c$ of the tuning condenser set to minimum capacity. Although not serious, it becomes worthy of notice at 3.5 MHz. Hence the warning in Part I related to attempting to make one ring element cover two hf bands.

Frequency Bandwidth of Antennas

A practical way to describe the concept of antenna frequency bandwidth is as follows: Assume that at the resonant frequency f_o of the DDRR the correct feed point X (discussed in Part I) and ground produces an input impedance $Z_{in} = 50 + j0$ Ohms; a fifty Ohm coaxial line connected to the DDRR there would display a vswr of 1.0:1 at f_o. Now, *without retuning* the DDRR capacitor C, assume that the transmitter frequency only is increased to some higher frequency f_{high} where $Z_{in} = 50 + j50$ Ohms; then assume that the transmitter frequency only is reduced below f_o to some frequency f_{low} where $Z_{in} = 50 - j50$ Ohms. At frequencies f_{high} and f_{low} the feed coax vswr would increase to 2.6:1. The total frequency span $f_{high} - f_{low}$ is the *half power* width of the antenna. In the DDRR antenna case it is the *fixed-tune* half power frequency bandwidth. In the case of non-tunable antennas such as a half wave doublet, quarter wave vertical, yagi, etc., it is the antenna half power frequency bandwidth, period! Another way to describe this term is that at f_{high} and f_{low} the reactive part of antenna input impedance jX_{in} becomes equal to the resistive part R_{in}.

In Part I we mentioned that a transmission line antenna could be regarded as a highly *mismatched*, open wire transmission line "stub" section and that, due to such mismatch, the line stub possessed high amplitude standing waves along its length (*on* the antenna itself; *not* in the feedline to it). All hf antennas are forms of relatively mismatched rf transmission line stubs. The term "mismatched" is used in relation to a mismatch between the antenna wave impedance and the distant space wave impedance Z_o equals 377 Ohms. The lower the antenna radiation resistance value R_r is, (for a fixed value of ohmic environmental loss R_Ω), the higher the vswr on the antenna itself. The vswr on small antennas does not go to infinity to one, however, because a small amount of input power energy is (a) lost in the small but finite R_r and (b) lost into R_Ω in heating the antenna's near zone EM environment.

This vswr on the antenna itself can be related to the antenna half power frequency width or antenna Q. To get the right answers using conventional methods is very difficult and requires use of higher mathematics. Fortunately, Schelkunoff comes to the rescue in making things easy for us with his very useful expression for the characteristic impedance of an antenna as an rf transmission line. When you know K_m – and can calculate R_r from the simple equations (2-1.0), (2-2.0), and (2-3.0) – difficulties evaporate. All you need then are the following relations:[2]

$$m = \frac{K_m - R_r}{K_m + R_r} \quad (2\text{-}5.0)$$

$$Q = \frac{1 + m}{1 - m} \quad (2\text{-}6.0)$$

$$f_{high} - f_{low} = \frac{f_o}{Q} \quad (2\text{-}7.0)$$

As an example, let us take the calculations we just made for the case of the vertical post monopole element of the 75 meter band DDRR. Our K_m (regardless of loading) was 197.57 Ohms. When solely base-loaded, the DDRR monopole post alone gave us an R_r equal to 0.234 Ohms at 4.0 MHz. For this case,

$$m = \frac{197.57 - 0.234}{197.57 + 0.234} = 0.9976 \qquad Q = \frac{1 + 0.9976}{1 - 0.9976} = 832.33$$

$$f_{high} - f_{low} = \frac{4.0 \times 10^6 \text{ Hz}}{832.33} = 4.80 \times 10^3 \text{ Hz} = 4.80 \text{ kHz}$$

The same height post monopole of K_m = 197.57 Ohms, when solely top-loaded as an element of the DDRR antenna, produced an initial value of R_r equal to 0.93 Ohms. As C is set to minimum capacity at 4.0 MHz, its reactance is high and can be calcuated. Therefore, let us set $R_{e(DDRR)}$ equal to 0.850 Ohms at 4.0 MHz. Then again,

$$m = \frac{197.57 - 0.850}{197.57 + 0.850} = 0.9914 \qquad Q = \frac{1 + 0.9914}{1 - 0.9914} = 231.56$$

$$f_{high} - f_{low} = \frac{4 \times 10^6 \text{ Hz}}{231.56} = 17.27 \times 10^3 \text{ Hz} = 17.27 \text{ kHz}$$

Again here, we have employed needless decimal point accuracy to illustrate the method, using relations which are approximations. Nevertheless, the answers secured are useful. It is seen that using the monopole base-resonated with a *lossless* loading coil, the half power frequency bandwidth obtained is just barely wide enough to pass a 3 kHz SSB signal or CW-type transmission. Conversely, the same monopole — as part of the DDRR — would easily pass "high fidelity" double sideband AM; however, we based our calculations on R_r alone. As R_Ω adds to R_r in terms of the "dampening" of the vswr on the antenna system, both antennas would actually display a wider bandwidth found by substituting R_t equals $R_r + R_\Omega$ in (2-5.0). We don't know what R_Ω is in value as yet, but we certainly wish in some way to keep it to a minimum. Securing antenna bandwidth increase due to the "swamping" influence of R_Ω is a poor way to go, as it will drop antenna efficiency N as

$$N = \frac{R_r}{R_r + R_\Omega} \times 100\%$$

We will include the environmental ohmic loss resistance R_Ω in our discussion a bit later. Here is a critical point, however: In two-way hf communications, employing a *single antenna*, we wish to secure a total half power antenna bandwidth just wide enough to pass the data information rate to be communicated (CW speed, FM, SSB spectral content) while avoiding excess or redundant antenna bandwidth. During the transmission phase of our communications, an increase in antenna bandwidth of fifty octaves or more greater than we need doesn't count one way or the other. In the reception mode of our two-way communications, however, excess antenna bandwidth permits more random noise to pass and load the front end of the receiver to effectively decrease signal-to-noise ratio. Too wide an antenna bandwidth also increases the QRM we experience on the desired signal we are trying to copy in the presence of strong, just-off channel carriers. Modern communications receivers rely heavily on i-f selectivity. Here, we wish to assist the front end stages of the receiver by placing a narrow, tunable, "bandpass filter" between them and the rf universe — in the form of the antenna.

I said "tunable!" That is a key factor here. When we use antennas which exhibit a narrow but just "wide enough" bandwidth, we must be able to move this filter "slot" quickly in frequency to carry on practical hf communications. If we secured such a narrow frequency width "slot" from an electrically small antenna resonated solely by the lowest possible loss, extremely high Q loading coil placed very high up in the monopole (to increase CA), the instant we tried to vary the coil inductance (by coil taps, turn sliders, etc.) and change the frequency of resonance, effects from eddy currents and consequent departure from optimum coil shape factor would immediately run up coil loss — and the antenna radiation efficiency would plunge downward. An air or vacuum condenser is of exceedingly high Q at a given capacity setting; varying capacity over wide limits to change antenna frequency hardly affects condenser Q at all.

An Image for the DDRR (and Other Transmission Line Antennas)

Those among the ham brotherhood who hold calls with only two letters after the area prefix may still remember a device now relegated to moth balls together with the spark gap, galena detector, and super-sensitive regenerative receiver: the *counterpoise* (especially the *tuned* counterpoise). The counterpoise was placed under your linear monopole, "T", or "L" antenna when there was less than $\lambda/2$ horizontal space area diameter available in which to lay out a radial wire ground system on the soil. You found it very curious: If you did go ahead and lay out n number of electrically short radial wires on the soil and operated the antenna, you got some value of radiation efficiency N_1 from the total antenna/ground system. But if you (a) lifted the same n number of short radial wires a bit above the soil, (b) insulated the whole system of n wires from soil ground, and (c) then tuned *each* short radial wire in the system to resonance at f_0 using individual series *loading coils* — if you did that, you obtained a substantial improvement[2] in total antenna system efficiency.

The old-time professional antenna men who first observed this phenomenon said to themselves, "Wow, this is really weird! For some reason my insulated, tuned wire ground system collects more electric E lines of the antenna near zone field and returns this energy back to the antenna input terminals with less total ohmic loss R_Ω than the same number of short wires just laid on the soil surface!" Unfortunately, space does not permit our having a QSO at this point about the beautiful phenomenon of rf soil and space current (displacement) diffraction which relates to this very effective but now almost forgotten low frequency antenna technique. It can only be noted that such electrically small, insulated and tuned counterpoise systems even permitted erection of monopole antennas on the roofs of tall municipal buildings in the early days of BC radio where the small roof space there didn't offer a prayer's hope for use of a conventional wire "ground" system. The *tuned* radial wire counterpoise worked well. A de-tuned radial wire system, however, was inefficient by comparison. Therefore, the tuned radial wire counterpoise was just fine for use in *one way: fixed frequency* broadcast type transmission. For use in two-way hf communications where frequent and rapid frequency changes are necessary, it is an impractical nightmare! You have to retune *each* of those series loading coils — n of them! An automated system to do this would not only be a Rube Goldberg mechanical mess, but run into the same efficiency problem in varying coil inductance mentioned a ways back. Now, we said *radial* wire ground system!

In Fig. 3(a) of Part I, you will notice that the image currents flowing in a continuous surface, electrical "mirror" ground plane beneath a DDRR antenna are *not radial* in geometry. Instead, the image currents of the DDRR flow around in circles, going in the opposite direction to the currents flowing in the ring conductor just above them. Very careful

laboratory measurements carried out on a 5λ by 5λ sheet copper ground plane beneath a DDRR show that these image currents do not begin to turn outward radially until you get at least λ/8 distance away from the ring conductor. At such a distance, these image currents are very weak in magnitude; they do not decay by the 1/r rule at all. It was found that DDRR antennas of the purely monopole form did not operate efficiently when placed over a true radial wire ground plane — only over sheet metal mirrors. Of course, in the case of the *U.S.S. Wheeling* DDRR, we had a pretty good approximation to such a sheet metal mirror in the form of the hangar roof, welded ship's structure nearby, and that immense surrounding sea plane, so we used it effectively. But what if the Navy had asked us to errect that 2-30 MHz DDRR on *Old Ironsides* (all wood in spite of her heroic name)? Well, we would have just said, "Aye, aye, Sir. You can have it on the teakwood deck or at the peak of the foremast."

This is the way we would have handled the job on the double:

Under each of those overhead, separate frequency band DDRR ring elements we would have placed a "mirror" image ring conductor — an exact duplicate ring, using the same tubing conductor diameter d, same circumferential length S°, and so forth. Instead of each of those tuning condensers C being connected to the metal roof of the helicopter hangar at terminals 4G, each would have been returned to a duplicate terminal 4A' on the image ring conductor below. In such a conversion to a mirror image DDRR, we would not have increased the vertical height h at all. Instead of the view of each of those fiberglass posts which we see in Fig. 1, Part I, supporting the DDRR ring elements in parallel alignment above the hanger roof, we would now see another beehive insulator at each's base end, used to hold the two ring conductors in parallel alignment. Unlike that system of radial wire, tuned images in the old counterpoise system, however, there would be no need for a bull gang of sailors to rush out on deck each time a QSY was needed to start madly grid dipping all those series loading coils to the new operating frequency. Instead the operator, in the comfort of the shack, would merely push the DDRR tuning control button. Because the two ring elements are mirror images of each other, tuning condenser C would now move the entire DDRR system to the new operating frequency f_o as before. Of course, the converted Navy DDRR now sitting on the mizzen forepeak of *Old Ironsides* would no longer be a monopole: It would be a DDRR *doublet* antenna: still vertically polarized, still a low angle, omnipattern antenna. Its radiation resistance R_r(doublet) would remain unchanged. This is because, although you would use now ½h (instead of h) to get CA from equation (2-2.0), you would multiply the answer you get from the monopole radiation resistance equation (2-3.0) by two for the doublet case. Finally, although this is not a "construction" article, Fig. 2 is included to guide the amateur experimenter who desires to complete a compact size DDRR and put it on the air.

From Fig. 2 you see that the minimum size ham band DDRR is a single post model. Also, because it is costly and difficult to form large diameter tubing into circular shape, the ham band model has a square shape: *square*, not rectangular. The total path length G + H + I + J + K should be equal to the length S° you obtain from the relations in Part 1, with H = I = J = G + P + K. In an hf band DDRR, the gap P between the tuning condenser end and the monopole post should be about 1.5 degrees at the high frequency end of frequency coverage. *All* ring conductor joints *must be welded.* This means heliarc welding, when high conductivity aluminum tubing is used. Please don't use automobile exhaust tubing or cad-plated conductors. Contact resistance and conductor loss spells disaster in electrically small antennas, due to the high magnitude currents in such radiators. Oh yes — use an absolute minimum diameter of 3 inches for the conductor diameter in antenna elements operating lower than 7.3 MHz. The smaller K_m (equation 1-2.0) gets, the higher both efficiency and bandwidth (fixed tune) becomes. As the image doublet DDRR requires no other ground plane, most users will probably mount it on a roof of some kind (garage, house, pole). When the height above ground is at least equal to h, use the formula

$$K_c = 276 \log_{10} \frac{2h}{d} \text{ Ohms}$$

instead of equation (1-1.0) for the characteristic impedance of the horizontal transmission line section (in getting the needed capacity values for tuning). The change in K_c of the image DDRR does not impair performance of the antenna when in operation.

Finally, it is seen that if we are dealing with a "doublet" DDRR, the "base" terminals 1A,1G of the "monopole" are now located at the *center* of the vertical post. The doublet requires a balanced rather than unbalanced feed, yet we still want to feed it with a coax line to the shack. OK — as seen, the coax line from the shack now *enters* the vertical

Fig. 3. (a) Low Profile Tunable (LPT) antenna operated in parasitically-coupled, wide passband, single channel mode using n elements. (b) Typical vswr versus frequency curve; solid line indicates half power frequency bandwidth of total array; broken lines indicate individual vswr response of each coupled element.

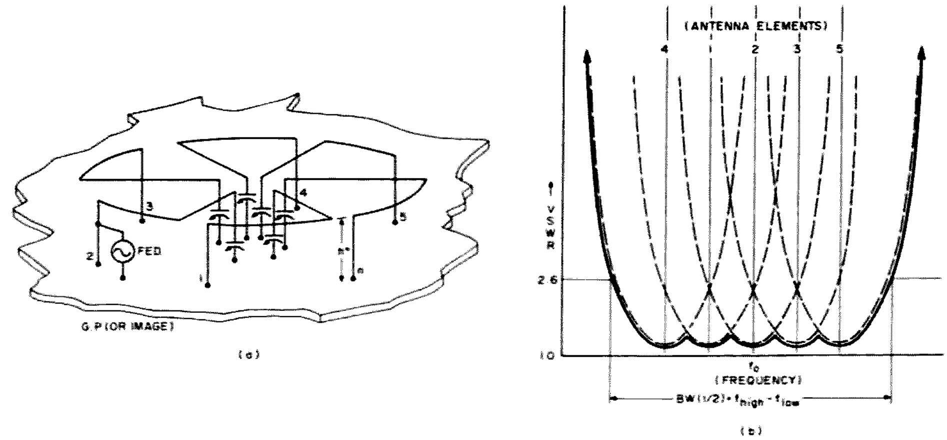

post via a hole through the conductor wall at ½h, then is pushed around inside the top horizontal element conductor, passes down through a hole in its *bottom side*, and continues on down the inside of a .5 inch o.d. thin wall tubing section to the ½h point.

At this point, the shield of the coax is folded back over the outside of the feed tube and clamped in contact with the metal. The coax inner conductor spans about a one inch gap to connect to the upper end of another 1.5 inch feed tube extending down to the lower "ring" conductor. You need first to determine the location of X for this balanced feed arrangement.

In Fig. 2(c), a suggestion is given for a *temporary* arrangement of coax to locate X and spacing L from the vertical post. The black vinyl coax jacket is stripped back to expose the shield braid over a sufficient length section of coax end. An additional "dummy" length is cut off and the inner conductor and shield shorted together to make a bottom feed section conductor. The aluminum tubing is polished with sandpaper to permit *good* electrical contact, and the coax line section temporarily "jury rigged," as shown, at a trial spacing L. Loops of wire "twists" are used to hold the coax shield in contact with the aluminum ring conductor and post. With the rig tuned to the *center* of the band, vary dimension L carefully until a vswr of close to 1.0:1 can be secured in the feed coax when tuning condenser C is "tweaked" to bring the DDRR to resonance at the transmitter frequency. With the temporary feed tightened down at this X location, now tune the rig up to the desired top frequency of tuning for that band element. If, without relocating the feedpoint X, a vswr of at least 2:1 cannot be attained at the f_{high} with tuning condenser C close to its minimum capacity, a bit of "pruning" is needed. Small, equal length conductor sections must then be removed from the conductor ends 4A, 4A' until a clear minimum vswr dip is observed at the high frequency end of coverage with C close to minimum capacity. The exact minimum vswr is not important, but the "dip" in vswr should be clearly seen. The location procedure for X at the *center of the band* must then be repeated until a 1.0:1 vswr is secured with the DDRR resonated by tuning C. It will then be found that the vswr will be less than 2:1 at both the high and low band limits for a fixed feedpoint X. The "jury rigged" coax feed is then removed and the permanent feed conductor system substituted. When cutting the hole to pass the coaxial line on the underside of the top horizontal tubing conductor, the hole should be elongated about one inch on either side of the X location to permit "inching" the permanent feed in final tests for vswr. An old-fashioned tube "socket" die cutter is handy for this purpose. Warning: *Do not* attempt to make the above described matching rests until (a) the DDRR is mounted at its permanent site and (b) the tuning condenser C is mounted inside its plastic weather housing and connected across the points 4A,4A', as shown, using beehive or cone feedthrough insulators.

An idea is suggested for cementing up a plastic weatherproof housing for both the high voltage tuning condenser, motor drive, and simple tuning frequency indicator. See Fig. 2(d). Note that although the plastic box is in the intense electric field at the tuning position, the actual leads (copper shim stock ribbons about 1.5 inches wide) to the tuning condenser rotor and stator terminals are insulated solely by the glazed ceramic insulators on the box. The leads should not be permitted to touch the plastic walls anywhere. Small ceramic button insulators space the condenser off the internal plastic mounting shelf inside the box. The *shaft* of the tuning condenser is also *isolated* from the motor and tuning indicator by means of a high quality rf shaft coupling insulator.

The condenser should be remotely controlled from the shack by a reversible, voltage speed controlled motor. Its shaft speed should be such as to permit "high speed" tuning across the entire band in about one half minute, yet slow enough to "tweak" the DDRR right onto channel center at f_0. An efficient DDRR is quite sharp in tuning. Once X is set correctly, you will find yourself tuning by means of the sharp receiving "noise peak." Hunting around the band, you will "tweak" this receiving gain point of the DDRR along the dial with the tuning control, as if the antenna were a dog on a long leash. A simple frequency setting indicator is suggested in the form of a sine potentiometer geared 1:1 to the motor shaft. At the shack end a dc meter calibrated in frequency for the current in the sine pot is a help in operating the DDRR. Otherwise, spin the receiver dial until you spot the noise peak – that's where the DDRR is. Small rf chokes should be placed in series with both the motor and sine pot leads at *both* the remote antenna weather box and shack end terminals. In multiband DDRR models, elements for the other bands are mounted concentrically to one another and operated as separate systems, each being designed according to the relations given in Part I. When in the process of finding the feedpoint X for these other band elements, make sure all other band rings are tuned off from harmonic relationship with the tested ring element. Oh yes, a final word: In a multiband model DDRR, the field coupling isolation between ring elements is very large in value so that even simultaneous working can be carried on in two bands. If, however, you suddenly find it strangely impossible to get low vswr tuning at some spot frequency in a given band, this means the ring element in the *next lower* band is tuned inadvertently to a "subharmonic" relationship. No problem: A touch of the tuning button to the offending band element easily cures this.

We have devoted considerable space here to the DDRR antenna. Fortunately, this detail is not for naught; understanding the DDRR not only permits us to grasp quickly the function of other transmission line antennas, but gives us a deeper appreciation for the small antenna problem in general: both the good and the bad of it.

The Low Profile, Tunable (LPT) Antenna

The narrow frequency bandpass nature of electrically small antennas of high efficiency has been noted. There are certain modes of transmission, even in amateur service (double sideband AM, FSK teletype), and in commercial and military practice (Loran, hf radar, "data burst"), where a wider fixed frequency bandwidth is desired. If it is also necessary, for various installation or tactical reasons, that an electrically small antenna be employed, a serious problem results. Conventional antenna practice would indicate sacrificing antenna radiation efficiency by letting R_Ω in the system increase to obtain the necessary bandwidth. Such practice even goes to an extreme called "swamping," where actual ohmic resistors are connected across the

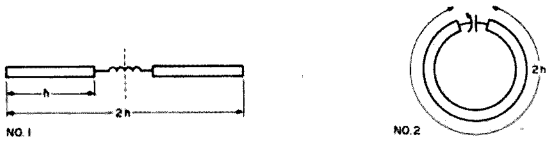

Fig. 4.

small antenna input terminals.

One version of the LPT transmission line antenna[4] answers this need for securing a controllable width frequency bandpass from an electrically small but efficient antenna. Shown in Fig. 3(a), the LPT antenna of this form consists of n number of radially aligned antenna transmission line elements of small size. Each is tuned at one end by a shunt variable tuning condenser. The "post" at the perimeter end of the short length circumferential conductor section is "grounded" to serve as a monopole antenna. Naturally, a "mirror image" doublet scheme can be used here, as in the DDRR, to improve efficiency. Our familiarity with the DDRR antenna principle would allow us to easily design these LPT elements as well.

However, it is noticed that only *one* of the vertical posts in the array of n antenna elements is actually fed rf power, as indicated by the "generator" symbol. In Fig. 3(b), the explanation for this strange configuration is made clear. In a manner analogous to the operation of a "stagger tuned" i-f transformer in a wide band receiver, all the other tuned elements in the LPT array are electromagnetically coupled to the driven element as parasites. Each of the n parasitic elements is tuned to a slightly different frequency above and below the center f_o of the radio channel. The staggered, overlapping frequency responses of the n element array results in a *single* overall frequency passband. The vswr "ripple" across the frequency passband is governed by the number of parasitic elements employed in the same way that the ripple in impedance response of a bandpass filter is governed by the number of network sections used. The analogy is almost exact, except that we deal here with radiators of EM waves. Not shown are small details such as provision for auxiliary reactors to control the coupling coefficient between elements to secure "overcoupling" if desired.

In amateur service where bandwidth increase need is modest, only a few elements would be required, making such an antenna practical, say, for 160 meter application. On the other hand, for such a small antenna to pass the forty microsecond width shaped pulse from a Loran transmitter without distortion, more parasitic elements in the LPT array would be required. There are other forms of the LPT for use in services requiring a large number of n transmission channels over, say, the 15:1 span of the hf spectrum from 2 to 30 MHz. Others can establish the so-called Bessel function circular array to produce directional beams which can be "slewed" rapidly in direction at hf similar to early German WWII radar systems. These do not find application in amateur service, however, and will not be detailed here.

The Loop or Magnetic Transmission Line Antenna

Take two equal length sections of aluminum tubing of conductor radius a. Call their respective equal lengths 2h, where 2h° is only twenty electrical degrees at f_o; calculate the K_m of of a section h° in length. Label one straight section "number 1," and then cut it exactly in half. In a very small gap left at the center of length 2h, connect a *lossless* loading coil whose inductance is

$$\tfrac{1}{2}(X_{coil}) = \tfrac{1}{2}K_m \tan 10°) \text{ Ohms}$$

Bend the other conductor, labeled "number 2," into a circle whose circumference is 2h°, leaving a small gap between the ends of the conductor. In this gap connect a lossless series condenser whose reactance is

$$|X_C| = |X_{loop}| \text{ Ohms}$$

where the reactance X_{loop} is that of the one turn loop inductor. The two electrically small, reactance loaded antennas will then look like Fig. 4.

Excite both the number 1 and number 2 antennas with rf at f_o. Now take measurements of the electric E and magnetic H parts of the fields produced by each of these two antennas, starting out very close to their conductors and then moving away in steps until a very large distance r/λ is reached. Your results will look like Fig. 5.

Very close to the straight, coil-loaded number 1 antenna, it can be seen that the electric E field is extremely large in intensity, while the magnetic H field part is minute in strength; in this near zone region the field ratio E/H is immense in value. At increasing distance from the number 1 antenna, however, this E/H field ratio decreases until at large r/λ distances it approaches a value of 377:1. Over on the right, we see that the result for the case of the loop antenna, however, is just opposite; now it is the magnetic H field which is tremendously strong near the conductor and the electric E part of the field which is very weak in intensity. The E/H ratio, in this case, is close to zero in the near zone. Yet as the distance r/λ from the number 2 loop antenna increases, we see that the E/H ratio value still ends up at the same magnitude of 377:1. Because of the radically different but "dual" nature of the near zone fields of these two *basic* types of antennas, the number 1 antenna is called an *electric* antenna; number 2 is called a *magnetic* antenna. So far this sounds like boring textbook stuff; who cares about this fancy near zone field phenomenon? We're hams – practical radio communicators. It's that far zone DX field we are really interested in, right? No, wrong! – as you will see in a minute!

Saw number 1 doublet antenna in half, cutting right through the *center of the loading coil.* You now have made it into an electrically small, coil-loaded monopole antenna of length h°. But it won't work! You must now stick either a flat metal sheet or a set of resonant radial wires under this number 1 antenna to get it oscillating again at f_o as a resonant monopole over this necessary electrical "mirror": You need a ground plane. However, the little condenser-resonated magnetic loop antenna keeps working nicely with or *without* any ground plane beneath it; it doesn't need one. The

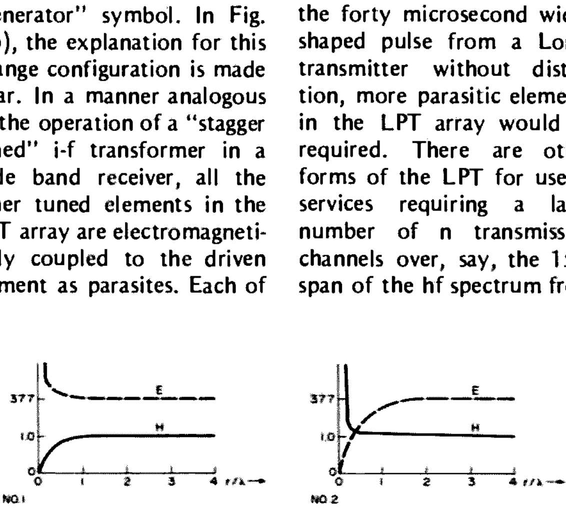

Fig. 5.

loop or magnetic antenna is *always* a doublet. There is also another, very critical, *practical* difference between these two basic kinds of antennas.

Take identical masses of real world dielectric matter such as soil, rock, vegetable tissue, etc., both containing equal amounts of moisture. Set the radial wire "mirror" part of the vertical electric monopole down onto one pile of such matter and the magnetic loop down on the other pile of this real world stuff. Immediately the temperature of the matter beneath the electric antenna will rise; part of the near zone field energy of the electric monopole is being lost into heating the dielectric matter. A check of the same kind of matter beneath the loop, however, shows almost no antenna near zone field energy loss – almost no heating. The tiny amount of heating which *is* taking place is entirely due to the small value of the electric E field in the near zone necessary to make up an *electromagnetic* rf field. The H part of the loop antenna field could care less about the presence of this wet dielectric matter near to it. Theoretically, equal input power fed to ideal electric and magnetic antennas of the same small electrical size in free space, when resonated with reactors of equal ohmic loss, will produce identical amounts of radiated energy at great distance in λ. This is *not the case* when the same electric and magnetic antennas must be erected near to real world, lossy dielectric QTH environments. Under these real world conditions, the electrically small magnetic loop antenna wins the antenna efficiency race over the electrically small electric antenna. By now you are thinking, "Boy, what a neat antenna that loop is!"

You would think, from what has been said up to

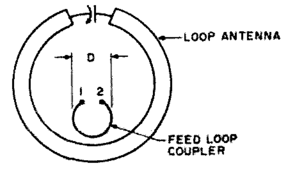

Fig. 6.

here, that communicators would use the magnetic kind of antenna exclusively in at least the hf and lower frequency radio region where antennas must be erected over this lossy, mostly dielectric planet surface of ours. When radio was born in the first spark transmission experiments carried out by Heinrich R. Hertz (1888) in verifying James Clerk Maxwell's prediction of the existence of rf waves, a loop antenna was employed. Since then, however, it is the electric type transmitting antenna which has ruled the ether waves. The loop antenna has been relegated almost completely to receiving service, particularly as a direction finder, where its twin, narrow width pattern nulls give accurate bearings. Why is this? First, the radiation resistance of a small loop is

$$R_{r(loop)} = 31{,}200 \left[n \frac{A}{\lambda^2} \right]^2 \text{ Ohms} \qquad (2.7.0)$$

where A is the årea of space enclosed by the loop conductor in the same units as λ, and n is the number of turns in the loop. This $R_{r(loop)}$ comes out to be a very low number value when the area A of the loop is small in terms of wavelength. As mentioned before in relation to the DDRR antenna's "base" impedance, this makes it very difficult to make an impedance match between the resulting small value of $Z_{in(loop)}$ and the Z_o of a standard feed transmission line. The always necessary complex network or transformer is inconvenient, invariably gives added ohmic loss, and must be "track-tuned" in step with the antenna. Some invention is required in the form of a simple, efficient coupler between the loop itself and the transmission line which does not itself need tuning.

Another problem is that, due to the very small value of $R_{r(loop)}$ – when the loop inductive reactance is canceled out by use of a *series* tuning condenser at f_o – the rf current circulating in the electrically small resonant loop at, say, one kW power input can get up to one hundred Amperes or more. Like the DDRR, therefore, you just don't make *transmitting loops* out of wire conductors; you use large cross-sectional diameter, highly conducting tubing. Finally, because the loop inductive reactance jX_{loop} is quite small in an electrically tiny loop of few turns, the small $-jX_c$ of the condenser spells lots of capacity in Farads. Although $-jX_c$ is not large in Ohms, the appreciable current magnitude in the loop produces a respectable magnitude of $|jX_c$, so the voltage rating of the tuning condenser is in the high hundreds to a few thousand volt range at one kW peak power.

Loop antennas will work well even when buried in the soil. During WWII, German submarines in "wolf packs" used loop antennas to communicate over relatively short distances while submerged.[5] Knowing all these facts, the U.S. military over the last few years has been field testing a loop transmitting antenna in the 2-30 MHz frequency range at power inputs up to one kW. Needing no ground plane and being of conveniently small physical size, it is well suited to "quickly transportable" two-way radio communications (field day?) applications. However, what makes this new loop transmitting antenna practical and efficient at long last is the ingenious patented[6] way it is matched in broadband fashion to the feedline. One form of this feed invention looks like Fig. 6.

A balanced two wire feed transmission line is connected to terminals 1,2 of the small feed loop of diameter D. As in the DDRR, all you do is tune the main loop variable condenser for resonance at f_o, then experimentally change D while "tweaking" the condenser to obtain a minimum vswr reading in the feedline. At the correct diameter D, feedline vswr will fall to 1.0:1. Once D is found, it need not be changed in order to get a good match over a large frequency tuning range. There is no need to actually make electrical contact between the base of the small feed loop and an adjacent point on the main loop conductor; coupling is achieved to the main loop antenna's H field. As expected in a magnetic antenna, even a sheet of varnished plywood can be used to hold the coupling loop in alignment while obtaining negligible dielectric loss. The feed loop can be made of, say, one half inch o.d. copper refrigerator tubing.

For ham band service in the lower hf range, main loops of from eight to sixteen feet in diameter would be practical, made from one or two turns of two inch or larger o.d. thin wall aluminum tubing. Naturally, they can be made square in shape instead of round. All main loop conductor joints must be welded, and husky "ribbon" leads made to the variable tuning condenser. The large total capacity size needed in the condenser for 160/75/40 meter band use could be attained by shunting a smaller size variable air or vacuum condenser with less expensive *fixed* air or vacuum

insulated condenser units. Only the tuning condenser and associated components like a drive motor need be protected by a plastic weather housing.

A little ham ingenuity would result in easy, inexpensive ways to mount and rotate such a transmitting loop antenna and even remotely tune it to resonance from the shack. The very sharp twin nulls in the horizontal pattern plane can be used effectively to slice through QRM by pointing one of the nulls in the direction of the interfering station – sort of like using a 160 meter "beam" antenna. The very broad width maximum lobes of the pattern produce almost omni-response to desired signals. One last but important word: The loop/coupler is a patented concept. No consideration should be given to manufacturing a loop antenna incorporating this excellent idea for sale without legal arrangements being first made with the listed patent holder. ■

Footnotes

[1] Relative amplitude is necessary in such relations because the radiation resistance of an antenna is not dependent upon the actual current magnitude – only its geometric shape of distribution. If this were not so, R_r would vary with changes in the power input to the antenna.

[2] Edmund A. Laport, "Radio Antenna Engineering," page 240, McGraw-Hill Book Company, Inc., N.Y., 1952. Unfortunately, this unique and invaluable book is out of print, but it may be found in some libraries.

[3] Edmund A. Laport, loc. cit., pp. 139-141.

[4] U.S. patent: J. M. Boyer, #3,680,135.

[5] Long range underwater radio communications is inefficient; this is *not* due, however, to any appreciable loss in the submerged loop antenna. It is due to the conductivity of water "shorting" the radio waves' E field at a large distance in λ, where the E/H ratio becomes appreciable.

[6] U.S. patent: John H. Dunlavy, Jr., #3,588,905, Antenna Research Associates, P.O. Box 196, Beltsville MD 20705.

Ultrasimple Regulation with New IC

- - power supply design greatly simplified

James Kucera WB0JLS
1477 Brenner Ave.
St. Paul MN 55113

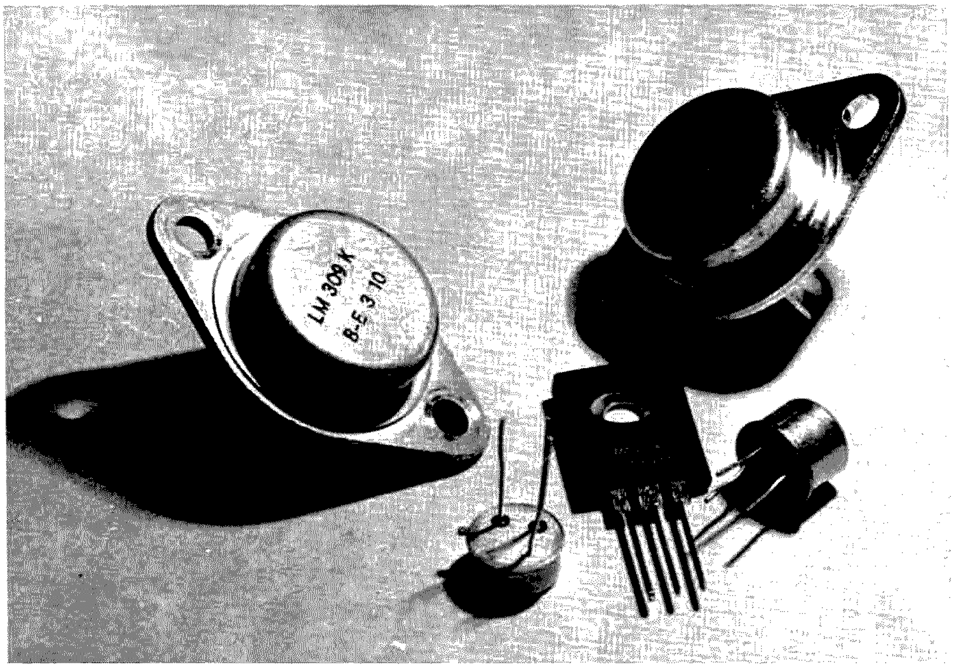

Three terminal IC regulators, available in a wide variety of voltage ratings, current capacities, and package styles, are easily used to make high quality power supplies.

Some time ago there became available to the electronics experimenter a number of three terminal monolithic integrated circuit voltage regulators. With a minimum of external parts, these ICs can be easily and inexpensively used in the design and construction of high quality, low voltage regulated power supplies.

In this article I am going to explain the basic use of the LM309 and uA7800 series of regulators. They are all fixed voltage units, most exhibiting a continuous duty current capacity of one Ampere. Available through many surplus dealers, they cost under two dollars, and the price is still going down, *in single unit quantities!*

There are many other regulators available on the surplus market, but I have chosen to describe only the LM309 and uA7800. However, if you spend a little time studying the published data sheets on other units, I think you will find that most of the circuit design procedures I have outlined here are directly transferable to use with other three terminal regulators.

Parts Selection

The specifications for the regulators I am describing are shown in Table 1.

Fig. 1 shows a practical power supply circuit, using any one of the regulators in Table 1. It needs no additional parts. It will work with all of these three terminal devices by simply varying a few component values and ratings.

Fig. 2 is also practical: If you cannot locate a center-tapped transformer, replace T1 and D1-D2 from Fig. 1 with the transformer and bridge rectifier circuit shown in Fig. 2. The full wave rectifier is preferred, because of the smaller diode drop of the two diodes in Fig. 1 than of the four in Fig. 2, but the difference is not that crucial.

Now let's assign some values to the components in those circuits. Use Table 1 to determine what regulator to use for IC1. Make your choice on the basis of voltage rating and current capacity.

Refer to the graphs in Fig. 3. There are five graphs for use in determining the T1 transformer voltage and C1 filter capacitance for five separate one Amp regulators. The transformer voltage is for a center-tapped transformer with a full wave rectifier, as in Fig. 1. If you use the bridge rectifier configuration from Fig. 2, halve the transformer voltage but remember to *add one volt* to compensate for the voltage drop of the extra diodes. If you use the schematic from Fig. 1, the current capacity of T1 need only be half an Amp – or half of what you want the completed supply to deliver. The lower voltage transformer needed for the less efficient bridge of Fig. 2, however, must be rated the full Amp.

Filter capacitor C1 should be an aluminum computer-grade electrolytic. If you have any question concerning interpolating a capacitance to use with any given transformer, round *up*. This will help to make up for component tolerances and line voltage fluctuations. Since readings off the graph are minimum allowable capacitances, you might want to use a larger value capacitor anyway.

Since the graphs were calculated using one Ampere of drain, if some fraction of an Amp is to be drawn, the C1 value can be reduced by that fraction. For example, if only 100 mA is needed, then only one tenth the capacitance is necessary, or any other such fraction. It works the other way around, also – if you make a ten Ampere supply (with a pass transistor), you will need ten times the filter size.

Exercise prudence when calculating capacitor voltage ratings. Use at least one and a half times, but preferably twice, the rms transformer voltage across the capacitor.

Do not omit C2. It is an rf bypass capacitor, especially necessary if the power supply is to be used in an area of strong rf such as a ham shack – but still needed even if used elsewhere. C2 helps to absorb the spikes and glitches on the line that are too sharp for C1 to respond to. It can be anywhere from around .10 uF to .33 uF – .22 uF is a happy medium.

Selection of the value of the output capacitor (C3) need not be very exacting. You can use anywhere from around .005 uF to a couple of microfarads. Generally, use larger values for larger currents. A common value for a one Amp supply is about a 1 or 2 uF tantalum. Some of the manufacturers' data sheets insist that it is not needed, but, since the very next phrase in the paragraph is always that its presence "helps to improve transient response," I would not suggest omitting it.

These regulators do not work well at low current drains – around 5 mA and under. Therefore, R1 has been calculated to draw about 5 mA from the supply. A half or quarter watter is sufficient. A pilot light (LED or incandescent) could be wired in to serve the same purpose. If the supply is being built into a project so that the drain is never allowed to go below 5 mA, R1 could be altogether eliminated.

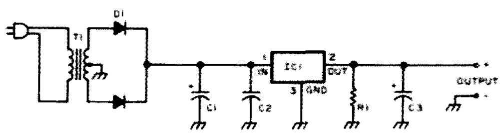

Fig. 1. Here is a practical diagram for a power supply of any voltage, needing no other parts. Use this schematic with center-tapped transformers in a full wave rectifier configuration. Regulator voltage/R1 value: 5/1.0kΩ, 12/2.2k, 15/2.7k, 18/3.3k, 24/4.7k.

Device	Current	Voltage	Package
LM309H	200 mA	+5 volts	T0-5
LM309K	1.0 Amp	+5 volts	T0-3
uA7805	1.0 Amp	+5 volts	T0-220
uA7812	1.0 Amp	+12 volts	T0-220
uA7815	1.0 Amp	+15 volts	T0-220
uA7818	1.0 Amp	+18 volts	T0-220
uA7824	1.0 Amp	+24 volts	T0-220

Table 1.

The choice of rectifiers for D1 through D4 is not at all critical. The graphs were compiled using 1.3 volts as the forward diode drop. This figure is based on the 1N4000 series silicon one Amp rectifiers. It should be close enough for interchanging with any of their surplus equivalents or replacements. 1N4002 or 1N4003 diodes would be a good choice for any of the transformer voltages on the graphs. Some of the lower voltage units can even get by with 1N4001s. Just make sure that you don't exceed the diodes' piv ratings.

Automotive Applications

There are many times when you want to operate a transistorized device in your car that requires a supply voltage different from that of the standard 12 volt automotive electrical system. A higher voltage requirement would take a power convertor exceeding the scope of this article, or a separate battery. But these IC regulators are ideal for obtaining lower voltages from the 12 volt electrical system. Fig. 4 is a supply circuit tailored specifically for use in a car.

An automotive environment is, however, very prone to transience. Special precautions should be exercised to protect the regulator. Positive spikes on the input line can very easily cause that input terminal to go above the maximum allowable input voltage for the IC. Therefore, the zener diode (Z1) has been put into the circuit to help shunt any higher spikes to ground. You can use whatever zener you have in your junk box in the 24 to 30 volt range.

The rectifiers are absent in this version, but note that the filter capacitor is still there. Keep it there – your car's alternator puts out an awful dc waveform. Filtering is still needed.

All of the other parts are the same as the other circuit diagrams.

Construction Considerations

The construction considerations you need concern yourself with when using these IC regulators are not very numerous. But those that do exist should be carefully observed.

There are definite reasons for the endpoints of the graphs in Fig. 3. *Do NOT extrapolate transformer voltages from either end of the graphs.*

These regulators will only work when an input voltage between certain limits is present at the input terminal. The dropout voltage, or level below which the unit will not operate properly, is usually two volts greater than the rated output voltage. Thus the LM309 needs an input of at least 7 volts to work correctly. If the input is too low, it will not regulate at the desired voltage and the ripple will be excessive.

The input level to these regulators cannot be too high,

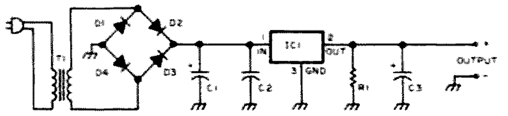

Fig. 2. If you cannot locate a center-tapped transformer, substitute this schematic for that of Fig. 1. Keep in mind the additional design considerations explained in the text necessitated by the extra diodes.

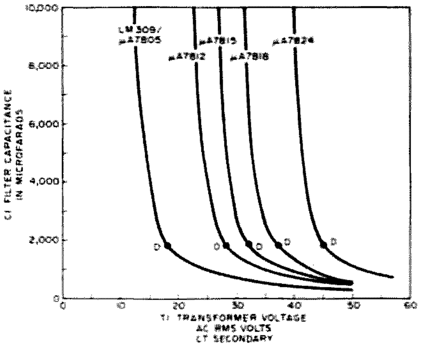

Fig. 3. Use this graph for determining C1 capacitance and T1 voltages. The points labeled "D" are the dissipation limits explained in the text.

either. The upper limit is almost always 35 volts, except in some of those regulators with a high output voltage. For example, the uA7824 will take an input of up to 40 volts, but the other units in the uA7800 series (and the LM309) are limited to 35 volts. This figure includes *peak* ripple voltage. If the input exceeds the absolute maximum input rating, *permanent damage may result.*

There is another reason for keeping the input voltage as low as possible. The dissipation of the devices in the T0-3 or T0-220 packages must be limited to around 5 to 10 Watts, depending upon heat sink efficiency. (The LM309H, in its T0-5 metal can package, is limited to around 1 or 2 Watts power dissipation.) In this case, exceeding the junction temperature limit, for whatever reason, will only trigger the internal protective features – thermal shutdown and current limiting – causing no permanent damage. This is especially important if you want to draw a full Ampere from the supply. Although the dissipation capacity is still a function of heat sink efficiency, 20 Watts is the absolute maximum dissipation regardless of how much heat you remove from the case.

For these reasons I have included points, labeled D (for dissipation limit), on the graphs in Fig. 3. If you want to draw high currents from the IC, use a transformer voltage to the left of (above) points D and attach the regulator to an adequate heat sink with liberally applied silicone grease. The Signetics LM309 data sheet indicates that a typical commercial heat sink, the Wakefield 680-75, should be sufficient to allow the T0-3 package of the LM309K to dissipate from 5 to 7 Watts at room temperature before thermal shutdown is triggered. Use this as a guideline for determining your own heat sink requirements. Keep in mind that my placement of the dissipation limits in Fig. 3 is in no way absolute. Dissipation capacity is very dependent upon heat sink size and efficiency. Simple experimentation should be used to determine what size is needed for your specific application.

Refer to the base diagrams in Fig. 5 for finding the pin connections of the T0-5 metal can, T0-3 metal power, and the T0-220 plastic power packages. Follow normal wiring procedures, with no other special precautions except to make sure that you use large enough wire for the current you intend to draw.

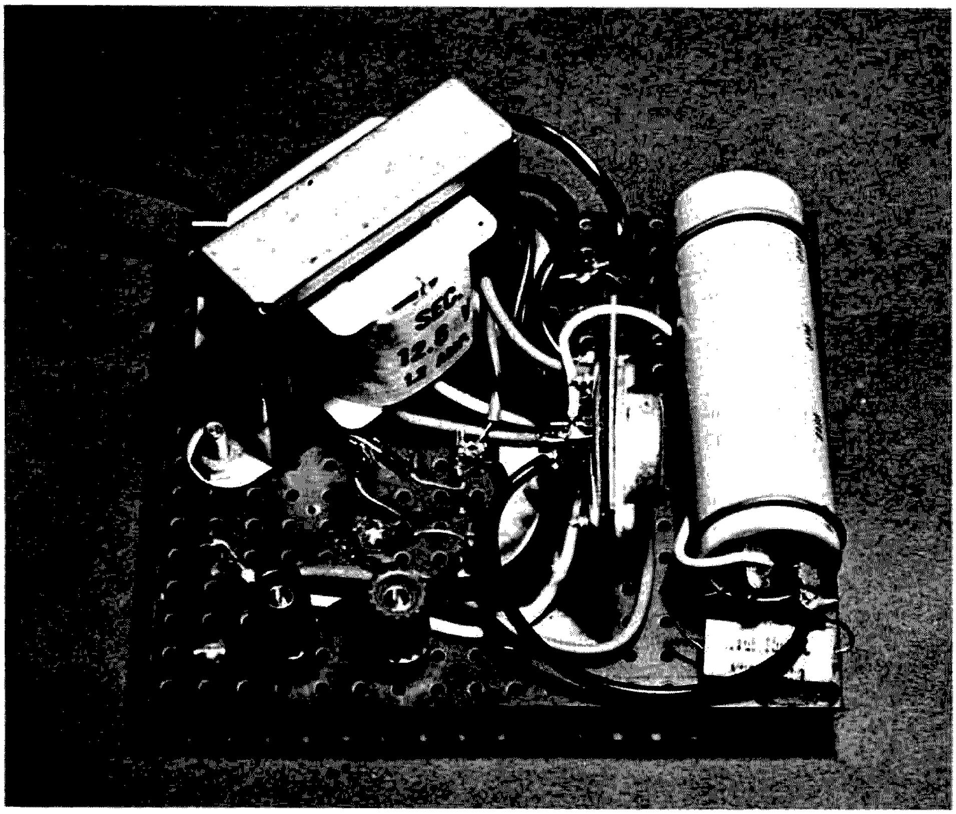

This breadboarded supply was assembled with an LM309K for use in testing TTL circuits.

Design Calculations

For those of you who want to apply my design procedures to other three terminal regulators, or just simply want to know a little of the theory behind this shortened design method, here are all the necessary

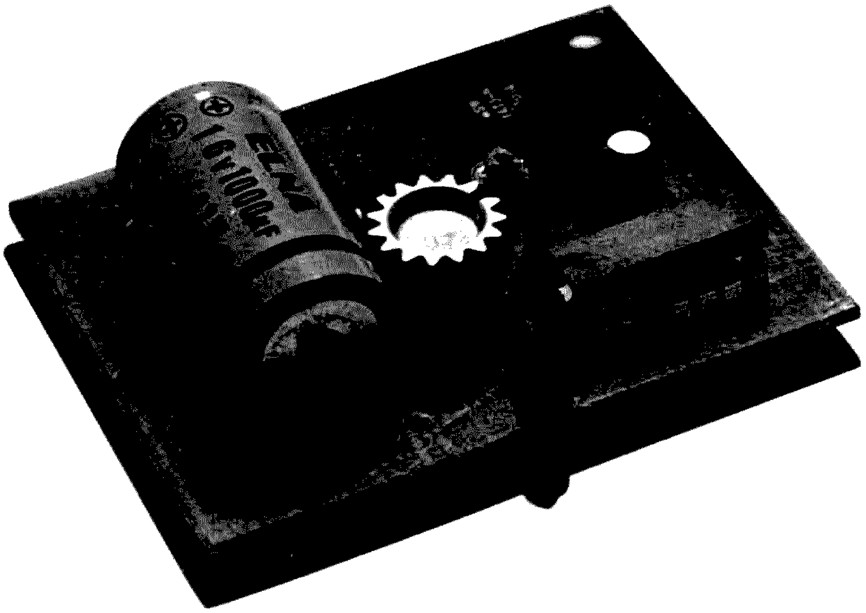

Here is an example of an on-card regulator using the LM309H. The circuit is a T.TL heads-tails game, taking its power from a 9 volt battery.

calculations and a little on why they are used:

You do not get exactly 12.6 volts dc from a 12.6 volt transformer. Nor do you get 6.3; in fact, there is no such easy one-to-one relationship. Rather, you get a fluctuating dc waveform whose amplitude varies all the way from zero to a peak value of $\sqrt{2}$ (or about 1.414) times the transformer voltage.

As you increase the size of the filter capacitor, the ripple stabilizes. The waveform approaches an inverse sawtooth — an almost vertical charge time, followed by a nearly steady linear discharge rate, all repeating every 8.333 milliseconds (cycling at 120 Hertz). The peak value of the waveform remains where it was, but the amount of ripple subtracted from it decreases. Approximating a sawtooth will be close enough for our purposes.

Since specific transformer voltages are a lot easier to come by than are capacitor sizes (especially if you rewind them yourself — but that's another whole story), we will calculate the necessary transformer size needed with a given capacitor. Let's start by taking that capacitor size and calculating its ripple per given current drain:

$$V_r = \frac{8I}{C}$$

where V_r = peak-to-peak ripple voltage, I = current drain in mA, and C = filter capacitance in uF.

We now have the amount of ripple, the diode drop, and the dropout voltage of our IC regulator. The sum of these voltages equals our minimum necessary peak transformer value. The *minimum* rms voltage that we can use therefore is:

$$V_t = (1.414)\,(V_d + V_r + 1.3)$$

where V_t = transformer voltage, volts center-tapped (rms), V_d = regulator dropout voltage (usually 2 + V_{out}), and V_r = the ripple voltage we calculated above.

Since this equation is for use with a center-tapped transformer and a full wave rectifier, here is a modified formula to use for Fig. 2's bridge. It is not simply half of the full wave value, so use this modified formula instead of trying to work it out of the other one:

$$V_t = (.707)\,(V_d + V_r + 2.6)$$

where all variable names are the same as before.

If you are using other rectifiers and have more accurate data on them, you can insert your diodes' forward drop in place of the 1.3 and 2.6 that I use for 1N4000 series rectifiers. Remember that, whatever the *average* current, the peak value is much higher at specific instances. Currents above ten Amperes can be in a one Amp power supply! Keep this in mind if you calculate your own rectifiers' forward drop.

Round up your final answer. This will incorporate a safety margin to allow for component tolerances and line voltage fluctuations. A ten or twenty percent round up margin could safely be used, providing that you do not approach the absolute maximum input ratings of your device. Your final calculation should be a check to make certain that the instantaneous voltage, with the actual component values you have decided to use, never exceeds the capacitor or regulator input ratings. When you round up, all that you in fact are doing is improving the line regulation at only a slight trade-off in size and efficiency.

Device Availability

The LM309 regulator (both the H and K package styles) has been designated to be worst case 7400 TTL compatible. Barring thermal shutdown or current limiting, their output voltage will never deviate outside the 4.75 to 5.25 volt range that 7400 TTL logic requires — even counting line, load, and thermal regulation summed worst case.

The LM309H is therefore a prime candidate for on-card regulators for logic circuits needing less than 200 mA — and it is in fact somewhat unique in this respect. The larger package styles, although still small enough for PC board mounting, are more conducive to chassis mounting.

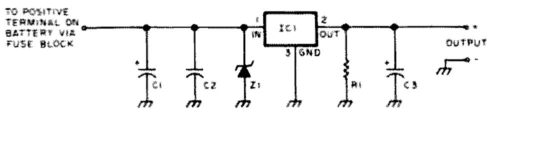

Fig. 4. This is a supply tailored for use in the transient-prone environment of a car. Zener Z1 can be anywhere from around 24 to 30 volts. All other parts are as in Figs. 1 and 2.

The LM309 is by far the most readily available of the many three terminal voltage regulators. For the sake of printing costs, some suppliers have omitted the LM prefix in their magazine advertisements. Others do not make obvious the distinction between the H and K case styles. Nevertheless, a good share of the surplus dealers that advertise in the back of this or any other experimenter-oriented electronics magazine do carry the LM309.

A different story exists concerning the uA7800 series. Even though here again some distributors have dropped the prefix in their advertisements for the sake of brevity, there simply are not as many firms carrying it. Careful reading of advertising, especially the literature sent by suppliers in response to Reader Service inquiries, will show you who sells what. There are some commercial and industrial suppliers who carry the units at prices only slightly higher than mail order surplus dealers. Surplus prices are all about the same, but since slight discrepancies do exist, shop around before you send anyone your money.

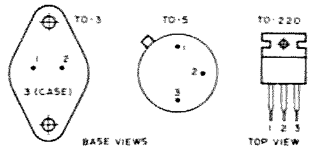

Fig. 5. Here are the pin connections for the TO-5 metal can, TO-3 metal power, and TO-220 plastic power packages.

There are quite a few regulators available that I have not mentioned here. Don't be afraid to try some of them. However, remember to make sure that you are buying a fixed voltage, three terminal voltage regulator integrated circuit. Some chips, such as the 723, are not three terminal devices, and they require a number of external components to adjust the output voltage and set the current limiting point. They have to be used with a much larger number of external components, in circuit whose design is much more involved than this. The giveaway should be that no specific output voltage is mentioned. If the device is advertised simply as a "monolithic voltage regulator," you can be pretty sure that it is a multiterminal unit. Some ads do not give a verbal description of the device, but just its number and price. You can cross-reference to other advertisements to figure out what the product is.

A series of regulators that you might be interested in – especially if you want to build a ±15 volt op amp supply – is the uA7900 series. They are negative voltage complements to the uA7800s. Availability is still somewhat limited, but hopefully it will improve shortly. Both series are produced in a wide range of output voltages, including a couple that I have not mentioned here. Again, check through the ads in the back of this magazine.

Make sure that, for any device you buy, you also obtain a set of the manufacturer's specification sheets and also, if possible, application notes. Originally the LM309 was produced by National Semiconductor and the uA7800 series by Fairchild, but quite a number of other manufacturers have since second-sourced them. So don't be too upset if you receive from a single distributor spec sheets and regulators with different manufacturers' names on them. There is enough industry-wide compatibility so that you need not worry about differences between manufacturers. (Actually, a more likely case would be to find no manufacturer's imprint at all on one or the other.) Hopefully, a little bit of reading through those data sheets and application notes will answer most of your questions.

There are external circuits, available from suppliers' and manufacturers' application notes, that can be used to make these regulators even more versatile. A typical circuit in this category is one enabling the output voltage to be set at different points, or even to be continuously adjustable. But since the main objective of this article is to introduce three terminal regulators in a relatively simple way, I will have to reserve discussion on them for the present time.

Three terminal regulators come into their own for the simple supplies. Usually, by the time you hang on all of the necessary parts to one of these three terminal units to achieve a specialized application, you find that you would have been better off by using a multiterminal device from the start. The 723 that I mentioned before is only one of a large number of these chips available.

I hope, even if you never actually use a three terminal IC regulator, that reading this article has given you a little knowledge about them and their use. If you have any specific questions you would like answered, or would like more explicit information concerning suppliers' names, feel free to write and ask me. (Please include a self-addressed, stamped envelope for my reply.) Maybe I won't know the answers to all of your questions, but hopefully I can at least refer your inquiries to someone who does. ■

Can An Indoor Antenna Work?

--making the best of a bad bargain

Many amateurs are forced to use indoor antennas on the HF bands either from their home QTH or while traveling. No form of indoor antenna is ever going to be as efficient a radiator as an outdoor antenna but there definitely are a few rules to be observed if one is going to achieve reasonable performance from an indoor antenna. In brief, these rules might be stated as:

1. The fact that an antenna is used indoors does not change basic antenna principles.
2. Choose an indoor location which provides minimum coupling loss to the outside.
3. Use an antenna form which is long enough to get power at least efficiently transferred from the transmitter into the antenna.

This article discusses each of the above rules in some detail and gives a number of examples to illustrate various indoor antenna ideas.

Radiation Characteristics

Many amateurs feel that, when an antenna is used indoors, its radiation characteristics can no longer follow the typical patterns shown in the various antenna manuals. It is true that, because of increased capacitive effects and coupling to the building structure, the wavelength formulas given in manuals do not always apply. But, the basic radiation patterns do not change greatly. For instance, a horizontal dipole still has its maximum radiation broadside to the line of the antenna. The same is true for an end feed wire unless it is several wavelengths long at the operating frequency, which normally would not be the case in an indoor location. Fig. 1 shows a bent half-wave antenna, end fed, used in a room. Maximum radiation is broadside to the antenna, or in this case in the direction bisecting the sides of the antenna. Obviously, if one forgets the "basics" and constructs an indoor antenna so it radiates maximum energy in a direction where few stations can be worked, one is wasting power in a situation where every bit of radiated power is precious.

Knowing the directional characteristics of loop antennas is particularly important since they are one of the most useful forms of indoor antenna. A large square loop (¼λ per side), such as the usual quad antenna element, has its maximum radiation perpendicular to the plane of the loop. If constructed as a closed loop, its terminal impedance is relatively low. For the loop described, it is about 80 Ohms. If the loop is fed at the bottom, the radiation is horizontally polarized. If fed at the side, the radiation becomes vertically polarized. Fig. 2(a) shows this type of loop. Many variations can be made on a full size loop by shaping it into different forms such as a triangle, by using loading coils to shorten the physical lengths needed and by more exotic shape deformations. One of the most interesting of the latter is shown in Fig. 3. It appeared in *QST* some time ago and good results were claimed for it. The radiation is vertically polarized and omni-directional. Supposedly, it could be turned around and used horizontally. With dimensions of only 1/10λ per side, it becomes feasible to construct it indoors (even on 40 meters) in large rooms.

Although large loops (even the compact version of Fig. 3) look attractive on paper, they become difficult to construct in reality. This is especially true if one wants to set up an antenna indoors for portable operation. A second

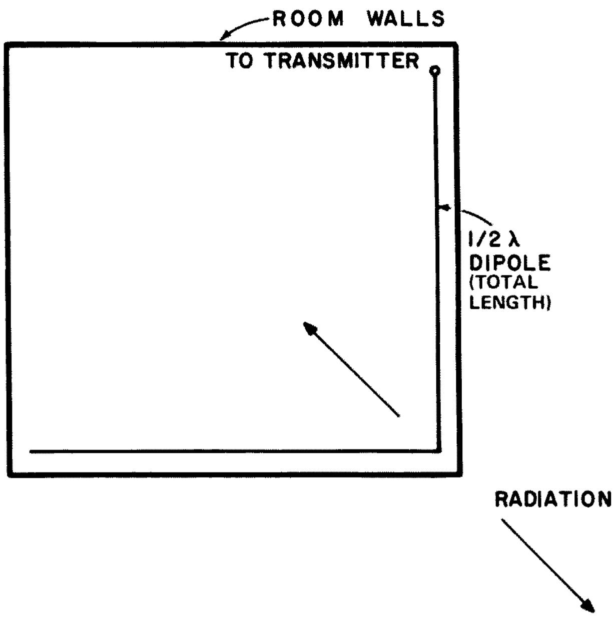

Fig. 1. A dipole antenna (1/2λ) retains its broadside radiation characteristic inside a room, whether center or end fed.

important class of loop antennas and the one most generally useful for indoor work is the $1/2\lambda$ loop ($1/8\lambda$ long per side). Such a loop can be considered as a half wave dipole antenna bent in the form of a loop. An important change in directional characteristics occurs, however. Maximum radiation is now in the plane of the loop *and* in the direction towards which the antenna is fed. This is shown in Fig. 2(b) for a loop which is "open" at its far end. The reason for "opening" the far end is to reduce the input impedance to about 50 Ohms. Otherwise, it would be in the order of several thousand Ohms and difficult to match. If the antenna is constructed vertically (diagonally across a room), its polarization will be vertical. If constructed horizontally (around the corners of a ceiling), its polarization will be horizontal. The direction of maximum radiation can be controlled by choosing at which end to feed the antenna.

The small loop adapts very well to usage in small to medium size rooms. By noting the dimensions of the room involved, one can quickly determine with a pocket calculator the lowest frequency band on which operation is feasible.

Operation on a second harmonic band is possible by shorting the far end of the loop and using it as a full size loop, but note how the directional properties of the antenna change! If the original $1/2\lambda$ loop used horizontally is used on a band where it becomes a 1λ loop, most of the radiation is straight up and down and useful only for extreme short skip contacts.

The next smaller class of loop is one having a total side length of $1/4\lambda$. Such a loop is similar to the loop of Fig. 2(b) except that capacitive loading is required at both the transmitter terminals and at the "open" terminals to bring the loop into resonance at the operating frequency. The capacitances needed depend upon the operating frequency but are 500-1500 uF at the transmitter end and 50-100 uF at the "open end" for 40/80 meter operation. A BC variable will suffice at the transmitter end but a wide-spaced variable is needed at the "open end." The capacitances are adjusted for minimum swr if a coax feedline is used or for best transmitter loading. The $1/4\lambda$ loop is a poor radiator – efficiency is only 8-10%. Yet, it may be the only usable antenna form if operation on a low frequency band such as 40 or 80 meters is necessary in a small room. Unlike the other larger loops, antennas where wire size is not critical, the efficiency of the $1/4\lambda$ loop is very much dependent upon using wire with low ohmic losses.

Indoor Locations

The idea of an outdoor antenna being located "as high as possible and as clear as possible" pretty well applies to the indoor antenna as well. Coaxial transmission line loss, even that of miniature coax such as RG-174, is quite low on the HF bands. It would be better to have an indoor antenna located as high as possible within a building, even with a long transmission line, rather than use an indoor antenna at a building level where it is shielded by other nearby buildings. In a private residence this usually means an attic location. In an apartment location one has to examine all the possibilities available since conditions will obviously vary quite widely. A disguised TV transmission line, for instance, might lead instead to a suitable loop antenna located inside or immediately around a roof level housing.

When choosing a portable indoor location one might

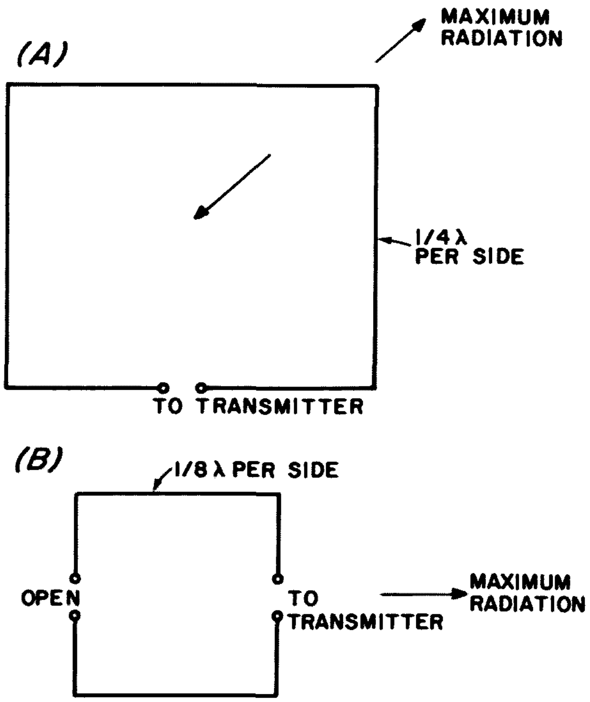

Fig. 2. The 1λ and $1/2\lambda$ loops are the most useful of indoor antenna forms. Both provide a good, direct match to coax line.

have a bit more choice of locations, such as when traveling on vacations. If any choice of building locations is possible, one of the principal rules is to avoid any steel-reinforced building locations. Such buildings will provide the same effect as though one were trying to work out of a screen-shielded room! Buildings can be examined for such construction by a variety of means. For instance, a simple compass can be used to examine walls for metal reinforcements. Sudden deflections at periodic intervals will indicate metal reinforcement as the compass is moved around closely against the wall. Most often, however, the basic nature of the building involved will provide the necessary clues. Any high-rise structure obviously has to be of metal-reinforced construction. Two or three story buildings may or may not be, even those of masonry construction. Wood frame buildings are obviously the most suitable, the only exception being to avoid being immediately under the roof of such a building if the roof is of tin or other metal. If one must work from a metal-reinforced building, one should try to be as high as possible in the building and in rooms with large glass areas.

Whatever indoor location is chosen, the antenna wire should be held a few inches away from the walls or molding if at all possible. The only exception concerns glass areas. If one is fortunate enough to be in a location with large glass areas, a good antenna construction material to consider is stainless steel tape. The tape can be placed directly on the glass and wires soldered to it, to join sections of an antenna and for connection of a transmission line.

Which Antenna Form to Use?

Working from an indoor location is a bad enough handicap, without having to lose transmitter power before it has a chance to be radiated. In other words, an antenna form should be used which will take and radiate as much of the available transmitter

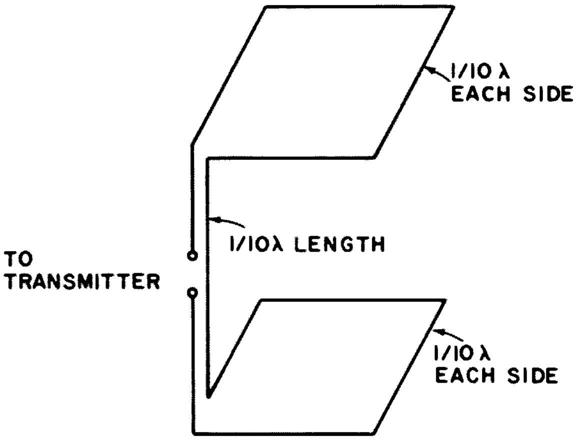

Fig. 3. An unusual method of folding a 1λ loop together.

power as possible without having that power burned up in ohmic losses in the antenna or antenna matching devices. In simple terms, put up as much antenna wire as feasible. A rule of thumb is not to use an antenna shorter than about 1/8λ. This would mean about 32' on 80 meters and would be a piece of wire which was being worked against some ground system such as the water pipes in a building. One can squeeze QSOs out of shorter antennas but it would be better to find some way to lengthen the indoor antenna by going through doorways between rooms or utilizing hallways where possible.

Progressing from the 1/8λ long wire one can go up to a 1/4λ or even 1/2λ long wire, all being worked against some ground connection. However, if at all feasible one should try to use a ground-independent antenna. The simplest is a dipole, either stretched out fully or formed into a "V" shape. Such an antenna can usually be used in attics on the higher frequency bands but the only solution in most cases for the lower frequency bands such as 40 and 80 meters is a loop antenna. The form of loop to aim for is the 1/2λ open-ended loop. Being a full 1/2λ long, its losses are low and it provides a convenient match to a transmission line or directly to a transmitter. Transmitters with adjustable pi-networks or similar networks can usually work into this antenna form without the need of additional antenna tuning devices. Being only about 8 foot on a side for 20 meters, it can be constructed in almost any room on that band or higher frequency bands. Being about 16 foot on a side for 40 meters means it can be accommodated vertically in only unusually nigh rooms. But, the diagonal run of many moderate size rooms will accommodate the horizontal legs of such a loop. In that case the vertical legs should be made as long as possible and the extra length made up by having a "U" fold in each vertical leg. Placed horizontally, such an antenna can be accommodated fully stretched out in larger size rooms. On 80 meters, a room would have to have unusual dimensions to accommodate a 1/2λ loop placed in any orientation and the only choice here would be the 1/4λ, tuned as previously described. Such an antenna has poor efficiency but still it will generally prove to be a better radiator than a 1/8 or even 1/4λ piece of wire worked against a lossy water pipe ground. ■

M. Lynn Lovell WA8WVF
202 E. Hgts. Blvd.
Elyria OH 44035

12 Inexpensive Volts for Your Base Station

--parts right out of your local Radio Shack

The two 12 volt power supplies use the same circuit. Meters were added to the version on the right to monitor the voltage and current.

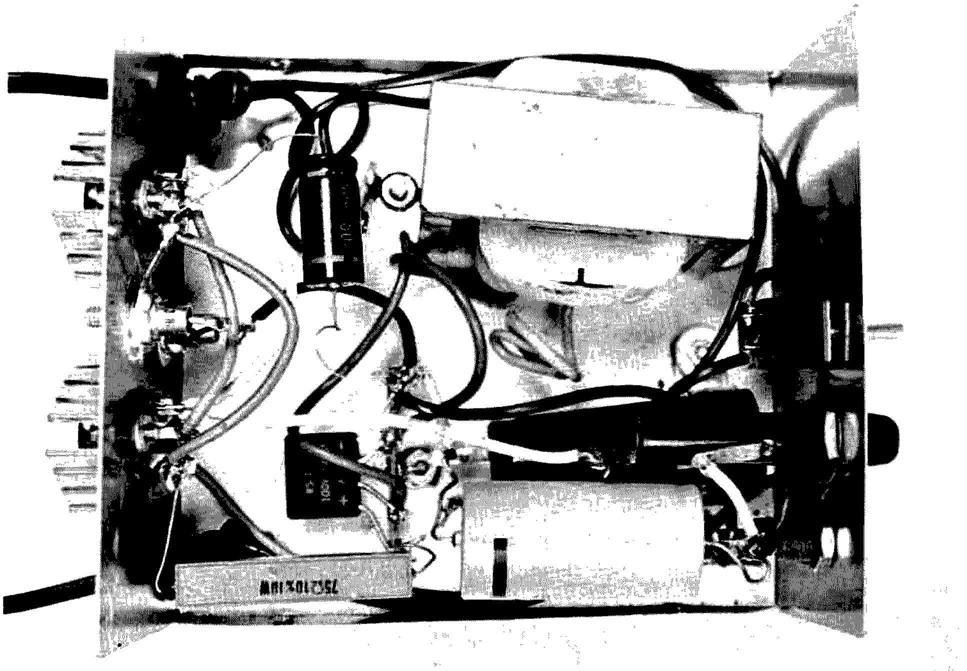

Parts layout is not critical. The cabinet louvers are kept in the rear to aid in cooling Q1 and Q2.

The purchase of a new two meter FM rig a few months ago rekindled my interest in ham radio. My ham activity had fallen to an all-time low, but the FM rig helped me rediscover many of my old ham buddies who had already gone the two meter route. It also helped me discover several other things, among them the rapid advancement the state of the art had taken during my absence from the ham bands.

My FM rig worked great mobile; however, base operations were difficult due to the lack of an adequate power supply. The XYL took a dim view of the car battery and charger set up in the living room every time I wanted to monitor the machine from the easy chair. Battery acid and carpet do not a happy home make.

After reading the latest on regulated supplies, I decided to build one. They look simple and are, except for one small item; those nice little IC regulators are about as easy to find in my area as a pocket in a nudist camp. Not wanting a divorce, but desiring to work the rig at home, a solution had to be found. This little power supply was the result.

The circuit is very straightforward and simple. It is by no means original, but is a combination taken from several articles. The great thing about this power supply is that all the parts except the two 10 Watt zener diodes can be obtained from a local Radio Shack store. The entire supply should cost no more than $24.00 if all the parts are purchased new, and a less expensive cabinet or modest junk box will bring this down considerably.

I have built three of these supplies over the past couple of months and all have worked like a charm. The one on the right in the first photo is the main shack supply now in use. I added the meters to monitor voltage and current so the supply could be used for future projects. The small one on top of the Regency is the latest version. I wanted to run the rig at work, so this one was built.

Every part in this one was purchased at Radio Shack, except the 10 Watt zeners. These I bought from a local TV parts store, so they

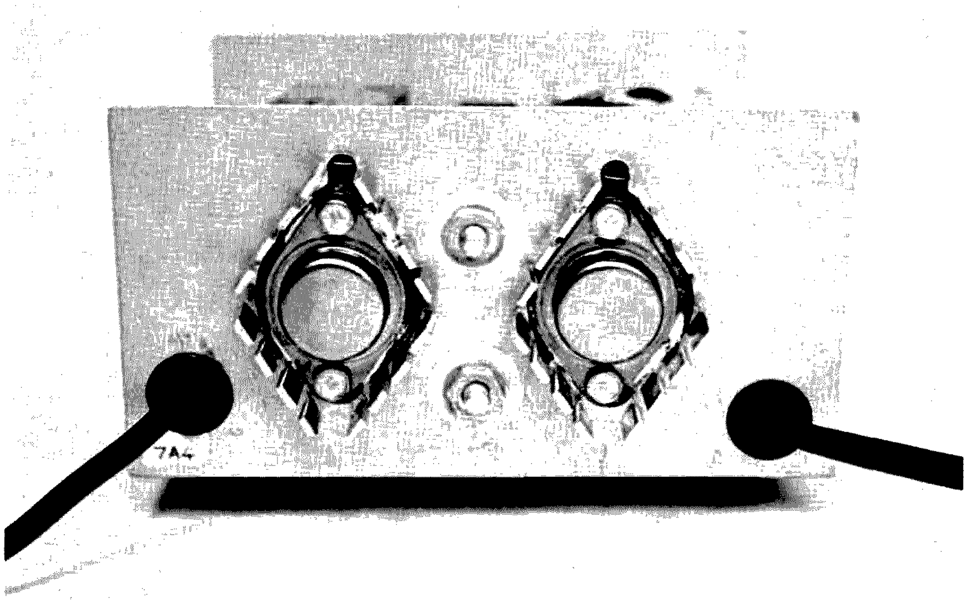

The 10 Watt zener diodes are mounted with insulating mica washers on rear of chassis along with the power transistors. Ac line is on left, 12 volt output on right.

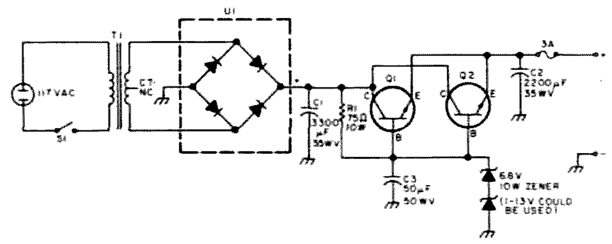

Fig. 1. Super simple 12 volt power supply. Q1, Q2 – 40 Watt power transistors, Radio Shack 276-592; T-1 – 12.6 V, 3 Amps, Radio Shack 273-1510; U1 – full wave bridge rectifier, 100 V, 6 Amps, Radio Shack 276-1171; cabinet – 5¼" x 3" x 5-7/8", Radio Shack 270-253.

should present no problem for anyone wishing to duplicate this supply.

Parts layout is not critical. The only suggestion I would make is to use a bus line for the negative voltage instead of a common chassis ground. This way a stray screwdriver from the case of Q1 or Q2 to the chassis will not short the transistors. The 40 Watt power transistors come 4 to a package. I had to do a bit of experimenting to find a pair that match, but at 30¢ each this is a minor problem. The rear chassis panel works fine as a heat sink; however, for added cooling I added the small heat sinks shown.

All in all, this little supply works great, looks good and is easy and economical to build. The regulation for the HR2B in the 15 Watt mode is less than ½ volt at 2.8 Amps. I have used this supply with other rigs such as the ICOM IC22A and other ten Watt rigs and the voltage drop has been less than ¼ volt. ■

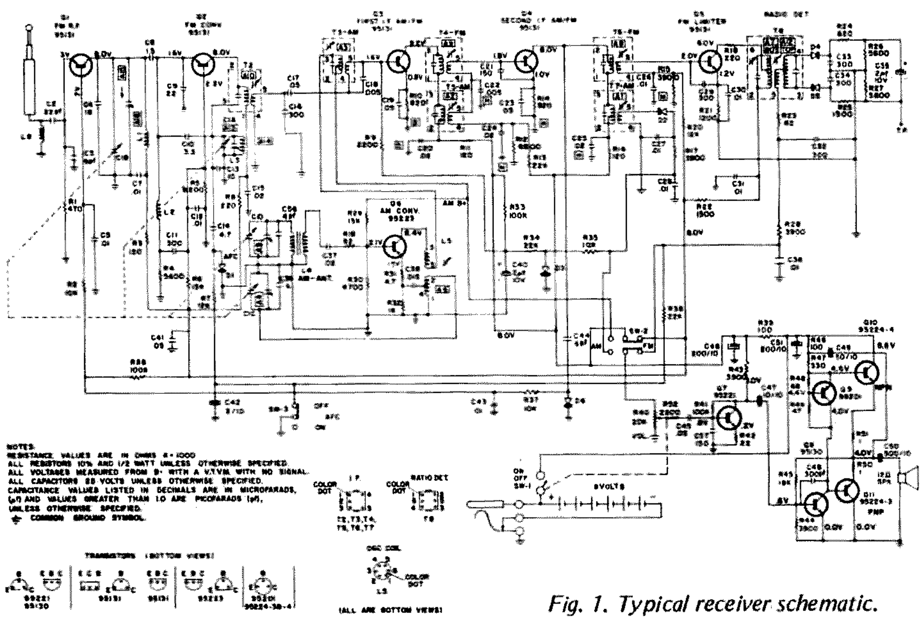

Jim Huffman WA7SCB
PO Box 357
Provo UT 84601

Fig. 1. Typical receiver schematic.

A Test Lab Bonanza -- Free!

--using a transistor radio

Just about everyone needs more test equipment, or easier ways to use the test equipment he already has. Just about everyone has an old radio sitting around and this can provide the needed test equipment. You merely need to make the proper modifications to the radio, then know how to apply the resultant piece of test gear. Here are some modifications which will allow you to add a mess of handy test equipment to your shop, and still leave your old transistor radio in working order. The finished device will be everything from a speaker subber to a transistor checker, and will still provide your favorite news or music while just sitting on the bench.

The first consideration is what to do about packaging the radio. You may decide to leave the radio intact and add plugs and jacks of your choice in the radio cabinet. You could run leads out from the radio cabinet and put the plugs, jacks, and switches on a minibox. Or you could package the radio complete with modifications in the box of your choice. No matter what the package you choose, be sure to decide on plugs and jacks that you already have around so you don't make all your test leads obsolete. The diagrams in this article show the use of phone jacks, but you could just as well use banana jacks or whatever. Fig. 1 shows a typical radio schematic. Some

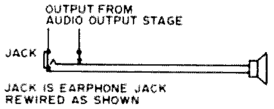

Fig. 2. Using the radio as a substitute speaker. You may wish to add a jack as shown while retaining the original earphone jack on the unit.

will differ, especially in part values, but the stages are essentially the same as the one shown. At least this diagram is helpful in locating where to put the modifications in your particular radio. You may add any or all the modifications to make a speaker subber, power supply, audio oscillator, signal injector, transistor checker, alignment generator, or weather receiver.

Speaker Subber

This is the simplest modification. You may add a plug as shown in Fig. 2 or you may modify the earphone jack already on many radios. When a phone plug is plugged in, the speaker is automatically disconnected. A pair of alligator clips on the end of the leads will allow you to connect to almost any source.

Power Supply

Whether your radio is battery or ac power, it will give you an easy source of 9-12 volts dc depending on the radio. All this without tying up the main power supply in your shop. When you are using the other radio circuits to check out a radio or experimenting with a circuit on the bench, the radio power supply will run both the test equipment and the radio or circuit under test. Fig. 3 shows some of the suggested modifications for both battery and ac power supplies. In Fig. 3(c) a transistor is used as a voltage source to provide variable voltage outputs from the

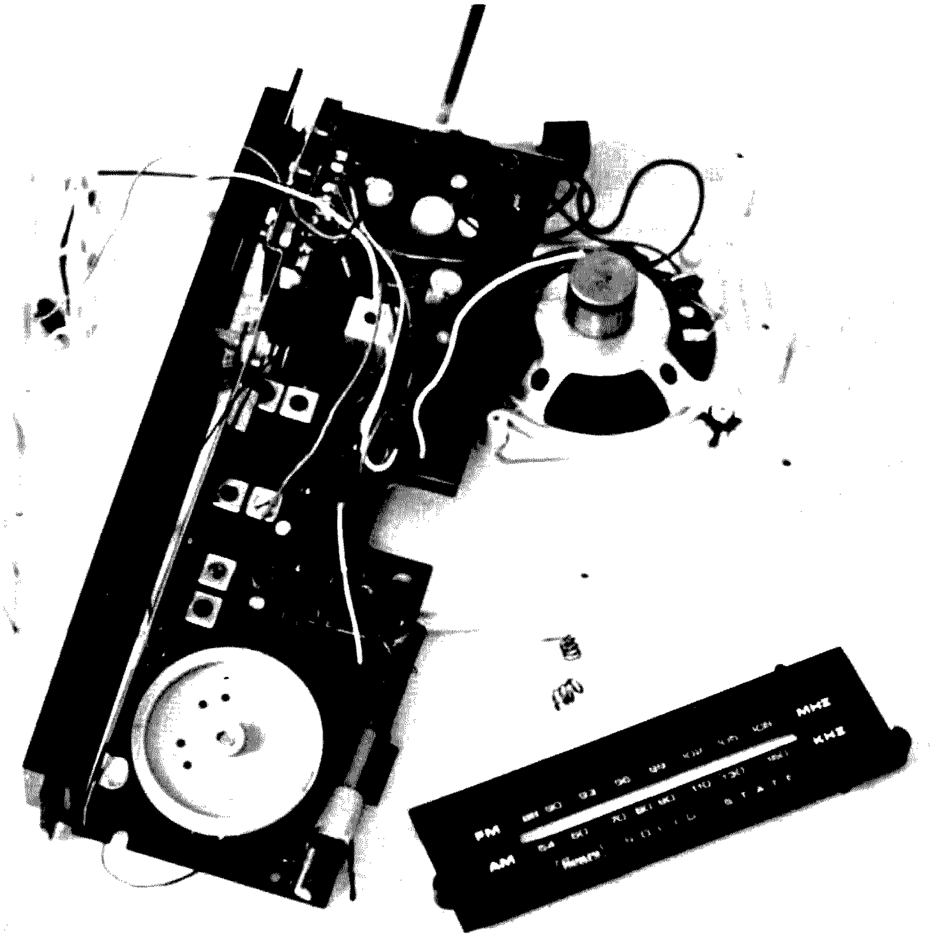

Here is a typical small radio undergoing transformation into a VHF receiver, one of the many applications described in the text. Add any or all to make your radio a handy piece of test equipment and still use it for a radio when it is not working for you. Note the coils in photo; these are the original FM coils removed for the frequency conversion described in the text.

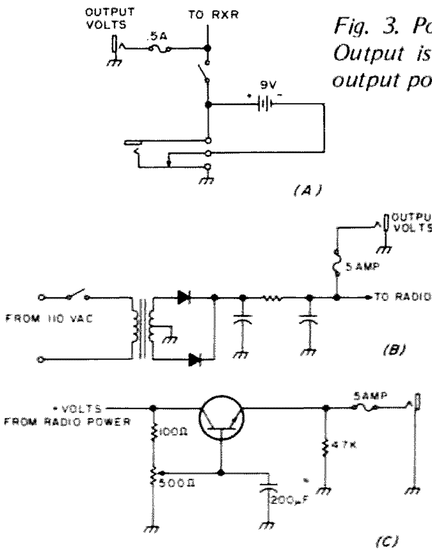

Fig. 3. Power supply circuits. (a) Simple battery supply. (b) Output is taken from an ac supply. (c) Continuously variable output power supply.

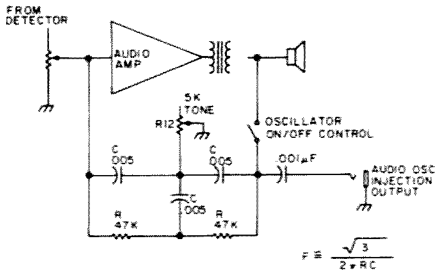

Fig. 4. Audio oscillator. May be used as an audio signal generator, code practice oscillator, etc. Values shown are for approximately 1 kHz; use formula for other frequencies.

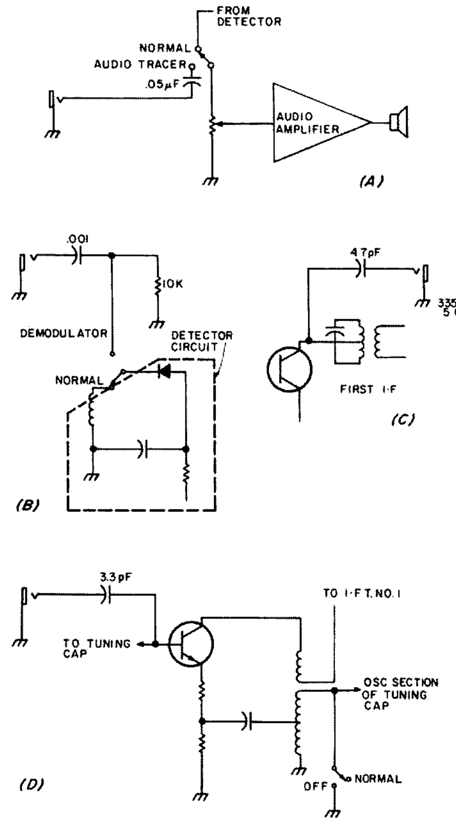

Fig. 5. Signal tracers. (a) Switch permits use as audio signal tracer. (b) The input is applied to the detector for use as a demodulator. (c) I-f injection for 455 kHz. (d) Oscillator is disabled to allow injection of oscillator from another set to test its operation. With switch at normal, radio can be tuned to detect 1600 kHz i-fs.

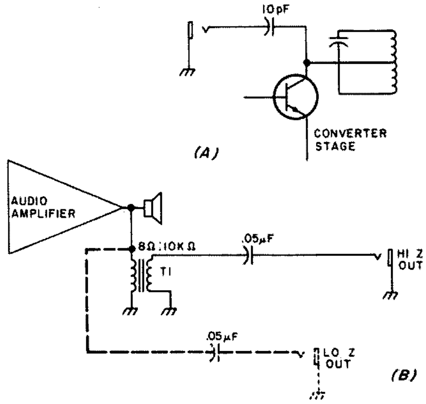

Fig. 6. Signal injectors. (a) The 455 kHz output from the converter can be injected in various i-f stages to check out their operation. (b) Addition of an impedance matching transformer for an audio signal injector with high output impedance. Dotted lines show alternate connection.

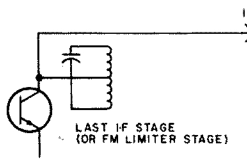

Fig. 7. This configuration will act as a fairly accurate i-f alignment generator. Since the output is from the last stage at the i-f, you have the advantage of the narrowing from all the tuned circuits at the intermediate frequency.

radio supply. You cannot ruin the pass transistor because you cannot short circuit the transistor circuit. If you have a battery level indicator on your radio, it may be calibrated and used as a voltage indicator. By adding a resistor network and range switch in place of the potentiometer, you can have discrete voltage outputs such as 1.5, 5.9, etc.

Audio Oscillator

Fig. 4 gives the modifications which make an audio oscillator. The result can be used as a code practice oscillator, test oscillator, audible continuity checker, or audio signal injector. The tone control provides some measure of control of the basic oscillator frequency.

Signal Tracer

The radio will work as several different tracers. The most obvious use is shown in Fig. 5(a), an audio signal tracer. Injecting a signal at the detector as shown in Fig. 5(b) yields an rf demodulator tracer. If you inject a signal into the i-f as shown in Fig. 5(c), you have a 455 kHz tuned tracer (or 10.7 MHz if the radio has FM) for use with standard i-fs. If you allow disabling the oscillator as in 5(d), you can inject another radio's oscillator signal to test the oscillator section of the other radio. Just inject the local oscillator from the radio being serviced, juggle the dial on both radios, and if you can pick up signals, the oscillator in the other radio is working. The same method could be used for FM systems; in that case, couple the oscillator signal to the FM converter stage through a gimmick of about 7 twists of hookup wire connected in the same place on the FM converter stage. You will have to add a switch to disable the oscillator as shown on the AM converter circuit. For the AM radio, the oscillator injection point also serves as a point to inject rf from a system that uses 1600 kHz i-fs by letting the oscillator run and tuning the radio to 1600 kHz.

Signal Injector

The output of the converter taken from the point shown in Fig. 6(a) provides a 455 kHz signal for checking the i-f of a radio. (An equivalent point on the FM converter provides 10.7 MHz signals.) Tune the radio to a station and the 455 kHz output will be the signal transmitted from that station. Fig. 6(b) shows the connection for injecting audio signals; just tune in a station and use its audio to check out the audio circuits under test.

Alignment Generator

In Fig. 7 the output from the i-f is taken after it has gone through several stages of i-f amplification. Since this signal has the benefit of the several stages of selectivity, the i-f output signal can be used as a source of accurate 455 kHz (or 10.7 MHz) assuming the radio has been accurately aligned. Merely align the radio as one of the steps to making it into a piece of test equipment. Signals tuned in on the radio will be translated to their equivalent

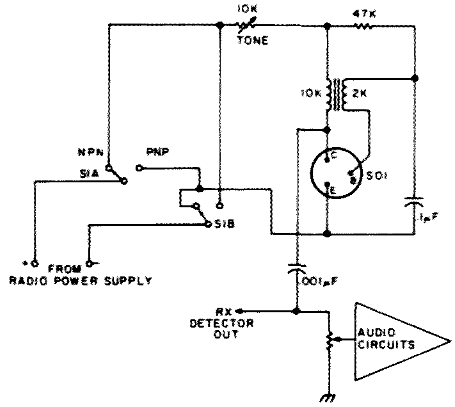

Fig. 8. Go-No Go transistor checker will work with silicon or germanium types with reasonable HFEs. Use a good unit for checkout; if circuit fails to oscillate, reverse either the primary or secondary connections. A good transistor will produce a tone in the speaker. You may wish to use clip leads in place of a socket.

i-f frequency and can be used as alignment signals.

Transistor Checker

Fig. 8 shows an outboard circuit added to the radio to allow in or out of circuit transistor checking. If the transistor under test will oscillate, it is generally good. This is a fairly accurate check in or out of circuit. Another simpler tester can be fabricated by merely replacing one of the transistors in the radio with a socket. When a transistor close to the type you are replacing it with is put in the socket, the radio should work. This test is only accurate for the NPN or PNP transistor type being replaced, and will only work with silicon or germanium types depending on what the radio has originally. This simple tester will not allow in-circuit checks at all, but the radio will operate normally as soon as the original transistor is placed in its socket.

Band Opening Monitor

Fig. 9 shows the schematic of a citizens band converter that works into the 455 kHz i-f of an AM radio. You may shudder at the thought of listening to the citizens band, but it sure is a good band opening monitoring device. Just buy a crystal for channel 10 and you will rejoice when the DX comes rolling in. Crystals are available at your handy Radio Shack store for a few pennies. Just don't let 'em worry you with that stuff about what model transceiver the crystal is for . . . any one will do.

Commercial FM Receiver

If your radio has FM, it can be modified to make a receiver that will pick up commercial business-band FM signals such as police, fire, public service, weather, etc. Some find the idea of listening to these signals more appealing than music when the radio is resting on the bench. Begin the modification by changing the oscillator coil. Reduce the number of turns by 1/3, then bring it on frequency by adjusting the spacing of the turns and the trimmer capacitor on the radio. If you can't measure the oscillator frequency with a grid-dip meter or equivalent, use a TV tuned to channel 7. Watch the TV as you tune the oscillator; when you can see and hear a signal on the TV, the oscillator is set around 175 MHz. The radio will now tune around 185 MHz or 165 MHz, depending on the resonant frequency of the circuits in the rf amp and mixer stages. Reduce the number of turns in the rf stage and the mixer by the same factor as the oscillator coil. Tune them in by adjusting the spacing and by resetting the trimmers on the tuning capacitor. Final tuneup should come while listening to a signal.

Now that the radio is completely modified, it will serve you well as a radio as well as a handy test jig ideal for servicing transistor radios. The unit is also perfect for the experimenter who may need to use one or all its functions in checking out breadboard circuits. Once you master use of all its possibilities, it will prove as handy on your bench as your VOM. ■

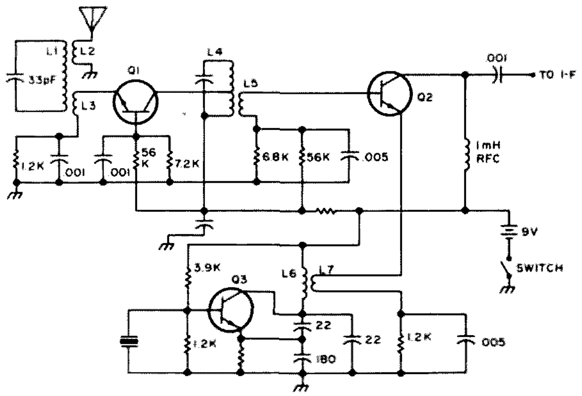

Fig. 9. CB converter for band opening monitor.

Frank Passage WB2NTP
54A Union Avenue
Little Falls NJ 07424

Protect Your VHF Converter

--with a novel antenna relay

Today's modern VHF receiving converters are superior in many respects to their older tube conterparts. Their noise figures are lower, gain is usually higher, power consumption is down, and because they are solid state, they lend themselves easily to portable operation.

They have one shortcoming: They must be protected against transients from the transmitter. This is especially true of converters with MOSFET front ends.

The standard antenna changeover relay may not be fast enough. The transmitter should be turned on after the antenna has been switched and should be turned off before the antenna has been switched back for maximum protection. Of course, the changeover relay should provide a high degree of isolation between transmitter and receiver ports.

Fig. 1 illustrates such a system. The theory of operation for the system follows (refer to Fig. 1).

When the push-to-talk switch S1 is closed, relay RY1 is energized. This energizes relay RY2 and partially completes the circuit that will allow relay RY3 to be energized. This allows the antenna to be switched and the receiver muted. Closure of RY2 completes the circuit for RY3, energizing it and allowing the transmitter to be keyed.

When switch S1 is opened, RY1 opens, opening the circuit for RY2 and RY3. Relay RY3 opens, turning off transmitter power, but RY2 is held in by the charged capacitor C1. This keeps the antenna connected to the transmitter until all output from the transmitter has ceased.

The relay RY2 can be a Dow Key 12 V relay with outboard DPDT contacts. If this relay is used, the other relays should be 12 V also. Capacitor C1 should be selected to operate with the coil impedance of RY2. (My system used a 300 uF capacitor.) Diodes D1 and D2 serve to short the transient developed by the collapsing field of RY1 and RY2 after they have been turned off.

Although the circuit may look involved, it does offer good protection for solid state VHF converters. ■

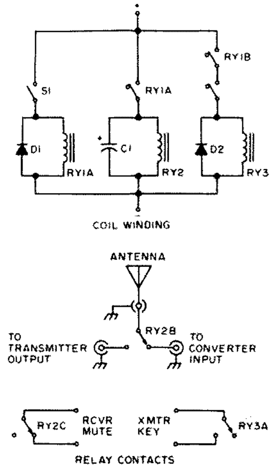

Fig. 1.

It all started through the courtesy of K3CPG. He had heard that some teletype page printers were to become available through the time-honored grapevine. With the expenditure of a bit of physical energy, our home was adorned with a large black box nicely mounted on its own pedestal. Having never worked with teletype, I was given the short course by WA3RMA.

The first order of business was not too tough: Build a loop supply. The result is diagrammed in Fig. 1. Do not omit the 1.0 uF capacitor and do not significantly increase its value. The teletype machine seems to be the home of some rather nasty electrical noises, when running, and the function of this capacitor is to keep those electrical disturbances from getting into your receiver and your terminal unit.

When I first completed the loop supply, I put a key in series with it. With the machine running I was able, by keying, to generate letters and numbers in random fashion. This did nothing but prove to me that the loop supply and the machine were functioning in some fashion.

The next step, again taken with the help of WA3RMA, was to test the machine using his TD or tape distributor. The RTTY magnet is plugged into J1 of the loop supply and J2 accepted the TD output. The sights and sounds of good copy coming from the punched tape of the TD let me know that the machine was in proper adjustment.

This led to the next step, namely building a TU or terminal unit that would take the output of my receiver or tape recorder and let the machine do its stuff.

I had purchased copies of two books: *Teletype from A to Z* by Durward J. Tucker and the *RTTY Handbook* by Wayne Green. These volumes are excellent, and while they do have some duplication of material, they are complementary and well worth having in your technical library.

Having enough printed matter to completely avoid re-inventing the wheel, I was, however, determined to try my hand at designing a TU.

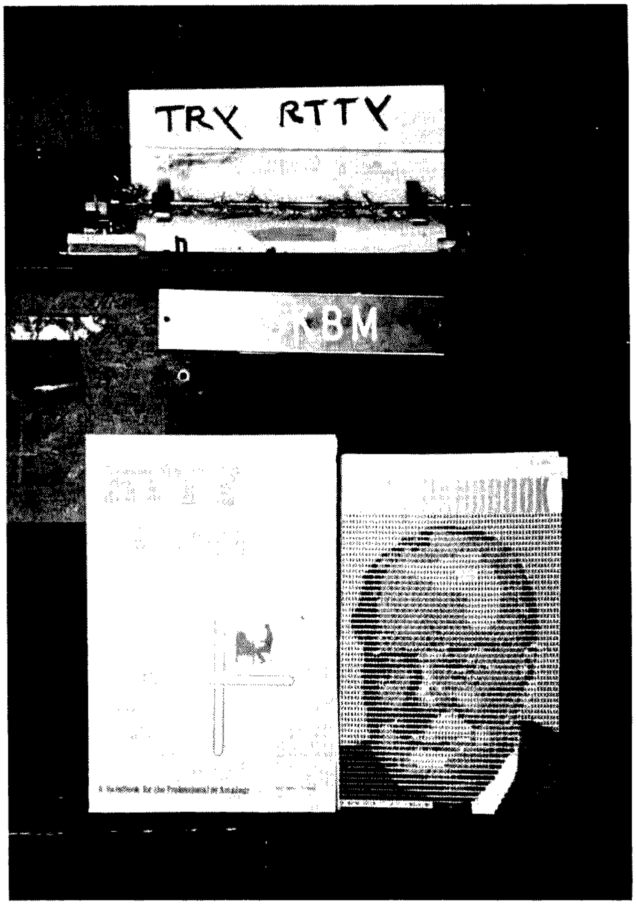

The requirements were low cost, simplicity, solid state, and the capability of copying wide shift and narrow shift. Early in the design I decided to try copying on one tone only, choosing the space tone. Fig.

Ridiculously Simple RTTY System

-- get on the air in one day

Allan S. Joffe W3KBM
1005 Twining Road
Dresher PA 19025

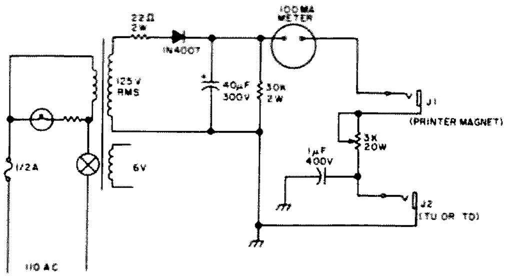

Fig. 1. RTTY loop supply. Transformer: Stancor PA-8421. Adjust 3k resistor so loop current runs about 60 mA, steady state. Note: If you use a metal panel, J-1 must be insulated from the panel.

2 shows the schematic of the finished product.

The input sensitivity is such that about 150 millivolts will produce RTTY copy. However, it is best to use enough input to take advantage of the clipping effect of the diodes shown as part of the input circuit to counter the effects of fading on the low frequency bands.

The next element in line is the audio filter that selects the space tone from the RTTY signal and also insulates the unit from QRN and other interference. This filter owes most of its form to an excellent article by Courtney Hall (September 1975 *Ham Radio*).

In his article, he indicated trouble with oscillation at certain filter settings and boy, he was right. I managed to cure the problem with the 0.001 capacitor that goes from the junction of the 1500 Ohm resistor and one end of the tuning pot. This capacitor to ground made the filter circuit stable at all settings. The unstable portion of the tuning range was the low frequency end, and I did do enough playing with different values of capacity to determine that significantly more than the 0.001 made other troubles, so stay close to this value.

The tuning pot is a 5k linear which will allow the filter to tune from 1500 Hz at the low end to just a bit over 3000 Hz at the high end.

The 1500 Ohm resistor connected to one end of the pot has the greatest effect on tuning range. The 150k resistor connected to the other end of the pot mainly affects the sharpness of the filter peak. Here again these values were diddled with enough to know that they are "on the money."

The filter is connected in the feedback loop of IC1 which is an 8 pin minidip 741. Curiosity impelled me to see if various ICs of the same type would significantly vary the filter tuning. The average of five different ICs showed no significant shift in either frequency or peak as the case may be.

The output of this IC is rectified by the diode, and the rectified voltage is developed across the 15k resistor from diode to ground. Notice that the polarity is negative. In passing, I will note that in the finished unit I have tried bypassing this resistor with a small capacitor ranging up to 0.05 uF with indifferent results. You can try this yourself with the understanding that as you approach 0.05 uF, the circuit starts to lose its immunity to QRN of the static random impulse variety.

Before we leave this area of the circuit, let's examine the meter which is connected across the 15k diode load. This is a very useful item as it serves as a tuning meter for the TU. The meter is multiplied (50 microamp basic scale) so that it becomes a three volt full scale dc meter. With a RTTY signal applied to the TU, the tuning pot is varied until the meter indicates that the filter is tuned to the desired tone. In normal operation, the meter will show about 1½ to two volts. The reading will vary with the incoming transmission characters, with fading of signals, etc. Do not omit this feature unless you enjoy headaches with your RTTY.

Up to this point, we have selectively filtered the RTTY signal, limited it to take care of input level variations, within reason, and supplied a tuning indicator. The next step concerns IC2, which is another 8 pin minidip 741 op amp.

This stage is used as a dc comparator. A negative polarity reference voltage of about 0.75 volts is provided by the voltage divider which goes between the minus terminal of the split voltage power supply and ground. When this voltage is applied to the designated input of the comparator, the output is highly positive on pin 6 of the IC. The other input of the IC is connected to the rectified signal output of the previous stage which, as has been stated before, is also negative in polarity.

When a RTTY signal that can pass through the filter is present, and if its value causes the voltage applied to IC2 input to *exceed* the reference voltage from the divider, the output of IC2 will imme-

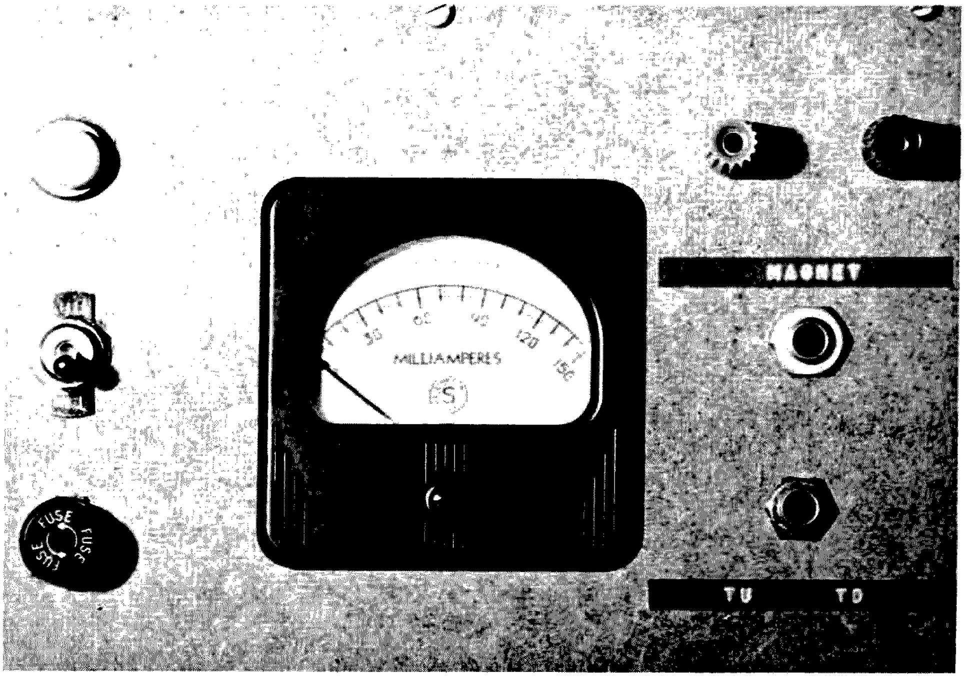

diately swing to ground or even a small amount negative.

The output of IC2 is directly coupled to the base of Q1. When IC2 output is positive, Q1 is biased full on and current will flow in the printer magnet. When the output of IC2 is at ground or slightly negative, Q1 has no base drive and no current flows in the printer magnet. Thus Q1 acts as a switch turning the printer magnet current on and off with the incoming RTTY signal, hopefully creating our objective of solid RTTY copy.

Q1 deserves a bit of special attention. It is an MJE-340 which is rated at some 300 volts and was obtained from SD sales through an ad in this magazine. Notice that there is a diode in series with the collector. This serves to protect the transistor from high voltage negative transients that may be present when the current in the printer magnet decays upon opening. To heat sink or not to heat sink is an open question. When the unit was under development, I had it running for some 20 minutes with RTTY going through it, and the MJE-340 remained quite comfortable, thermally speaking. In the final version, I chickened out and attached a symbolic heat sink of thin sheet copper approximately 6 cm square in area.

That about wraps up the unit but still leaves some explaining to do. For wide shift RTTY, the space tone which we are using to produce copy is 2975 Hz. The other tone you hear is the mark tone, and for wide shift it is 850 Hz below the space tone, or 2125 Hz. When the RTTY signal is applied to the TU, we tune the frequency pot so that the space tone is accepted by the system. The effect of the mark tone is acquired by indirection. Hopefully, since the RTTY signal is composed of mark and space tones, our TU will respond faithfully to the presence of space tones and by doing essentially nothing will indicate to the RTTY machine where the mark tones are in the transmitted characters. This is what I mean by "mark by indirection." This has one added plus. When no signal at all is present, the machine will run "closed." This is the equivalent of a simple "mark hold" circuit. Its additional virtue derives from the fact that when the machine is running "closed" it makes a lot less noise than when running "open," strictly because there is much less mechanical activity going on within its innards.

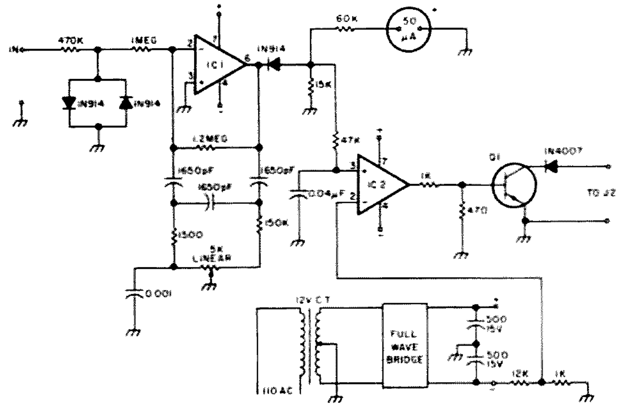

Fig. 2. RTTY TU. IC1, IC2 – 741 op amps; Q1 – MJE-340. All resistors ¼ W if wattage not indicated.

When receiving narrow shift RTTY, the mark tone is not changed, but the space tone usually becomes 2295 Hz which is only a 170 Hz separation. It is under narrow shift conditions that you can begin to appreciate just how good the simple audio filter really is (Table 1).

You are going to run into two different RTTY transmission types on the ham bands, FSK and AFSK. AFSK is the simpler mode to receive and will be found on six meters and two meters and possibly higher.

Basically, in AFSK, the RTTY machine at the sending end keys an audio oscillator to produce the two tones usually transmitted. This varying frequency audio signal is used to modulate the transmitter. At the receiving end you merely tune in the signal in the same manner as a voice transmission, apply it to the TU, and sit back and let the machine do its thing.

I said that AFSK is by far the simpler mode to receive for the following reasons. Most of us, as I am, are burdened with super selective receivers for the low bands where FSK is used. My receiver has a selectivity of about 2.1 kHz and there's no way in the world that I am going to be able to get a decent 2975 Hz audio signal through it. This is the reason that the audio filter has been designed to function effectively down to 1500 Hz. What you do is receive the signal just like any CW signal. In FSK, the transmitted carrier is actually shifted in frequency and arrives at your receiver just like a CW signal as far as sound coming out of

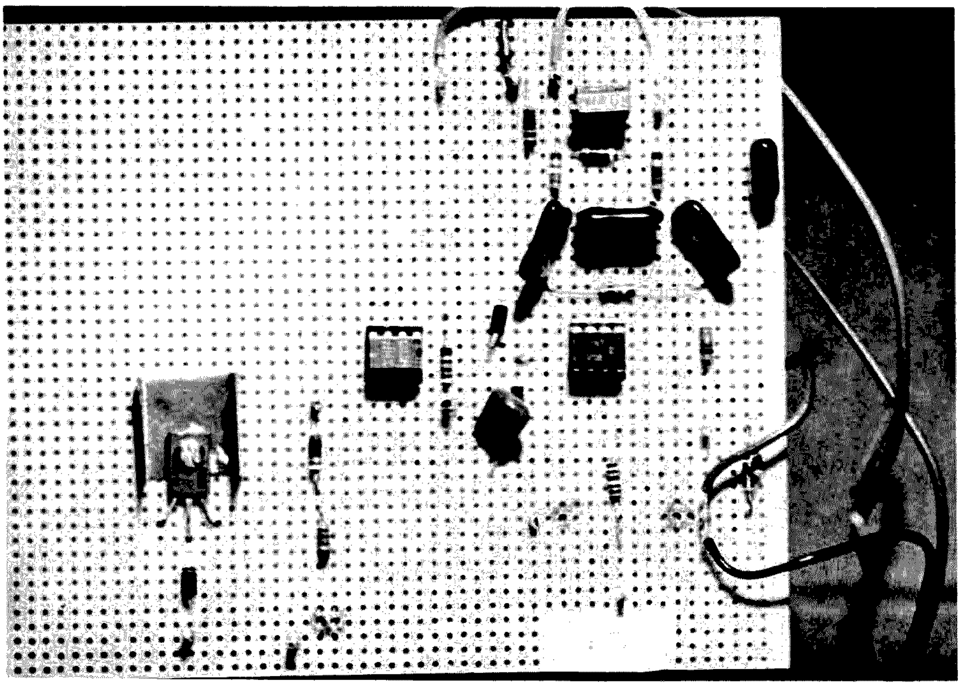

the audio system goes. Without the BFO on, it is just a series of clicks. Now, how do we solve the dilemma of getting a signal out of the receiver when I said that my receiver won't pass the signal, audiowise, due to the tight bandpass? Simple ... you just vary the tuning or the BFO until the generated audio beat tone is down within the tuning range of the audio filter in the TU.

The tuning meter greatly facilitates this process, and after several tries you readily get the feel of what sounds right. The procedure for wide shift or for narrow shift is the same. If your receiver is a wide band job, it will make the translation process unnecessary, but you will pay the penalty for lack of a narrow pass band, namely more interference from adjacent signals.

Using this TU, I have gotten very good copy from W1AW on their satellite transmissions which let one and all know what "Oscar" is up to. The transmissions I copied were aired on Sundays at 5 pm on a frequency of 3620 kHz. The first transmission used wide shift, and the same information was repeated after this using narrow shift. This is an excellent transmission to use for test copy as the signal is strong, clean and uses both shifts.

It is practical to copy a signal on a reasonably good reel to reel tape recorder. During the test period of the TU, I would feed the receiver both to the TU and the tape machine. The taped copy gave me a known signal to pump into the TU while changing parts values during the design. From experience, I can freely and sadly state that all tape machines running at a given speed, say 7½ IPS, really do not. Play the RTTY tape back on the same machine that it was made on, to avoid real grief.

Decibels	Frequency Hz	Voltage shown on tuning meter
±0	2295	1.50 volts
-3	2285	1.25 volts
-6	2275	0.75 volts
-11	2265	0.40 volts
-23	2255	0.10 volts
	2245	For these two frequencies, voltage
	2235	was too low for accurate reading.

Conditions of measurement: Enough voltage was applied at 2295 Hz to make tuning meter read 1.50 volts with filter peaked. Frequency was monitored by counter and varied in 10 Hz steps.

Table 1. Values showing effectiveness of filter when tuned for narrow shift. Space frequency is 2295 Hz.

If you enjoy suffering, try using a run of the mill cassette recorder.

For those inclined to put a scope on things they build, you should see nothing but nice clean square waves bouncing merrily at the base of Q1. It is the function of the 0.04 capacitor at the non-inverting input of IC2 to clean up any RTTY signal ripple. Do not increase the value of this capacitor. However, you can drop it down to an 0.03 with very little difference in effect.

You will notice after a bit that the rhythm and sound of your printer will tell you if all is well with the printing process. This is particularly true if the transmission is coming in from a punched tape. You will soon learn that any radical departure from that nice steady mechanical chuga chuga chuga means that something is amiss. Of course, if the transmission is manual, this is not true, particularly if a hunt and peck artist is at the other end of the circuit. ■
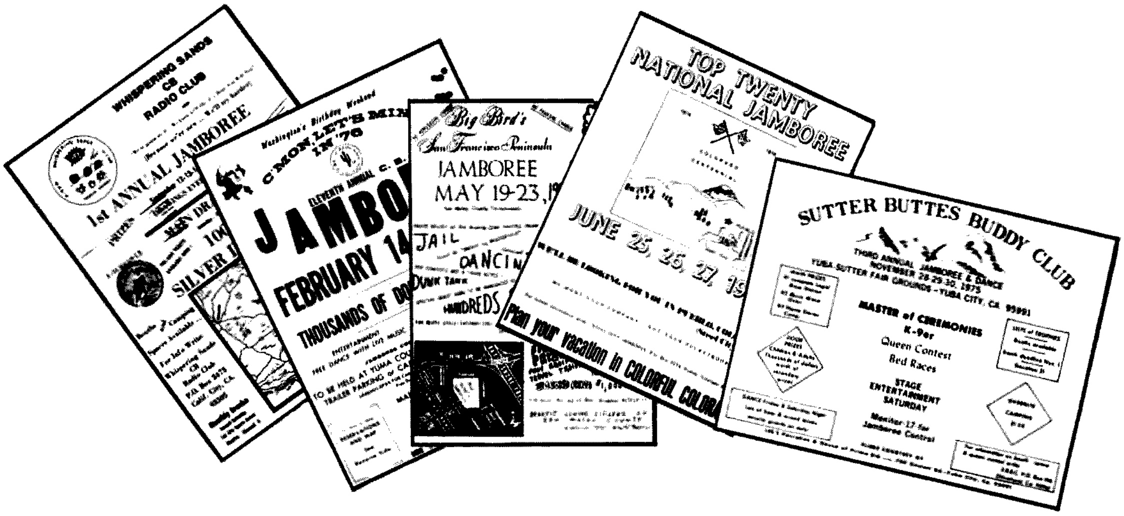
Robert Lee Fields
Box 884
El Sobrante CA 94803

How to Catch a CBer

-- practical hints

Judging from the title of this article, your first thoughts were that someone finally wrote "An Elementary Guide to Catching and Prosecuting Your Local Bootleg Citizen Band Operator." He's that "good buddy" that is wiping out all your neighbors' boob-tubes with his 1 kilowatt linear and spreading hate and discontent throughout the whole area. I'm sorry to disappoint you, but this article is intended to help you catch those CBers who are just about ready to turn in their skip handles because they have had enough of the CB retailers' "big bonanza." This article is from an ex-CBer, ex-Novice, and almost a General Class ham's point of view on what to do to catch a new ham – or if you prefer, a CBer.

My background in CB runs the whole interest spectrum. I started as a legal call letters CBer, progressed through the "track down those lawbreakers" period, and finally ended up joining their ranks as the "Spook." After attending their social gatherings for a few months, I met the girl of my dreams and had the traditional CB wedding. One guest remarked that the church parking lot looked as if the fishing fleet had come in because of all the cars with CB antennas on them. Luckily, my marriage has lasted longer than my interest in CB. And that is why I turned to ham radio and away from the "good buddy" part of my life in 1972.

Somewhere in the scads of CB articles in the *Pop Electronics* magazines, I have read that the average life expectancy of a "good buddy" is 3 or 4 years. That's from when he first gets excited about CB until he no longer has any interest in it as a hobby or way of life.

During this time the average CBer buys a SSB base radio, 2 mobile AM rigs, a groundplane, tower, rotor, and beam antenna, plus a linear and all the extra goodies to make his station the talk of the town. This means the fellow can spend a couple of hundred or a couple of thousand dollars, but spend they do in a big way. Through this period of second mortgaging his house to buy CB equipment, the "good buddy" can usually be found at coffee breaks shooting the bull and trading QSL cards, going to CB jamborees hundreds or thousands

of miles away, and making himself known for miles around by yakking on the radio day and night. Then along comes about the fourth year and the CBer realizes that it's just no fun trying to fight the local "channel hog" for a break or trying to compete with the thousands of new CBers on his channel just to attempt to talk 15 miles. Even skip shooting is becoming impossible with these new fellows and their new linears in the local area. So the "good buddy" decides to sell his station for that camera equipment that he has always longed for, and his CB way of life ends.

Now this is the chance that ham radio clubs have been waiting for to pick up some new recruits. Hundreds of these "good buddies" have gotten to the point of selling out because of a general lack of interest and the enormous crowds since the CB boom of 1976 came along.

Of course, I am speaking of C. W. McCall's hit record "Convoy" (about the CBing truck drivers), television's "Movin' On" with those CB truckers Sonny and Will, and the country western and rock stations across the country that are giving CB rigs away by the bushel to promote the song. And then there are all the clubs: CB, custom vans, custom 4 wheelers, custom pickups, custom VWs, custom skateboards, custom motorcycles, custom 18 wheelers, custom motorhomes; and don't forget airplanes, hot air balloons, hang gliders, and the ever popular U.S.S. Enterprize "Star Trek" Space Communicators with twin warp sound for the kiddies. A quick analysis of the situation leads me to ask these vital questions: Is everybody in this country a "good buddy"? Does everyone drive a semi and say "negatory" and "10-4"? Is everybody from Oklahoma and what is bodacious?

Millions of people are "turning off" CB after long and illustrious careers (to buy camera equipment) because of the CB boom. With something like 500,000 CBers a month seeking FCC licenses, there just isn't any place for the old timers to go to have room to talk. Even the high channels above channel 23 are filling up with sidebanders and their funny Donald Duck talking. So the "good buddies" with their Yaesus, Trams, and Tempos try to use off channels, ham bands, or just give up and finally sell out completely. The reason always seems the same: all their friends are gone and the channels are too crowded to use.

So how do the hams attract all these CBers into their clubs? Let's find out how the average guy gets interested in CB in the first place.

The Neighborhood CBer

Most CBers are drawn in by the advertisements in the media, or by a friend or relative who shows the prospective CBer what fun it is to talk on his cute little radio, get these nifty QSL cards, and use a catchy little handle like "Spook" or "Li'l Goober." The neighborhood CBer takes him to a CB coffee break to meet other CBers, and later helps the new guy buy a rig, put up antennas, check swr, fill out applications and give him all the help he needs to get into the CB groove.

CB Coffee Breaks

Coffee breaks are family style get-togethers usually held at pizza parlors with food, beverage, a live country western band for dancing, drawings, and a meeting thrown in. The drawings and prizes are what bring the crowds to the breaks — the better the prizes, the bigger the crowd. Most of the money goes to buy more prizes, but any left over goes to the club to sponsor picnics, dances, or campouts. Family participation is really stressed with all sorts of kids' prizes, food or appliances for the wife, and lots of radio gear for the hubby. An awards ceremony usually follows with presentations such as Channel Hog Award, Rachet Jaw Award, Bucket Mouth Award, and the coveted All Mouth No Ears Alligator Awards. The CB family comes home with a full stomach after a fun evening with friends, and with a little luck, all sorts of prizes just for buying a few bucks worth of tickets. My wife and I have furnished our kitchen in this manner for years — sure saved us a bundle.

CB Jamborees

Jamborees are the big brothers of coffee breaks and are usually held at county or state fairgrounds. An individual or club rents the fairgrounds, then rents out sales space for business and controls the food concessions. The club has printed thousands of flyers which are carried or sent to other jamborees all over the country hoping to bring droves of CBers to this jamboree. And not wanting to be left out of the "big one," a typical "good buddy" packs up the family camper, and family and friends caravan a thousand miles for a weekend jamboree.

Jamborees are like big fairs with something for everyone. Activities at most jamborees are dealer displays, carnival, flea market, kids' games and rides, bed racing, country western dances, liquid refreshment, and the thrill of meeting all those other skip talkers eyeball to eyeball. Two full days of excitement with your friends in a party atmosphere for only the cost of parking your camper on the grounds with hookups and buying tickets for the thousands of dollars of prizes the jamboree has put up to
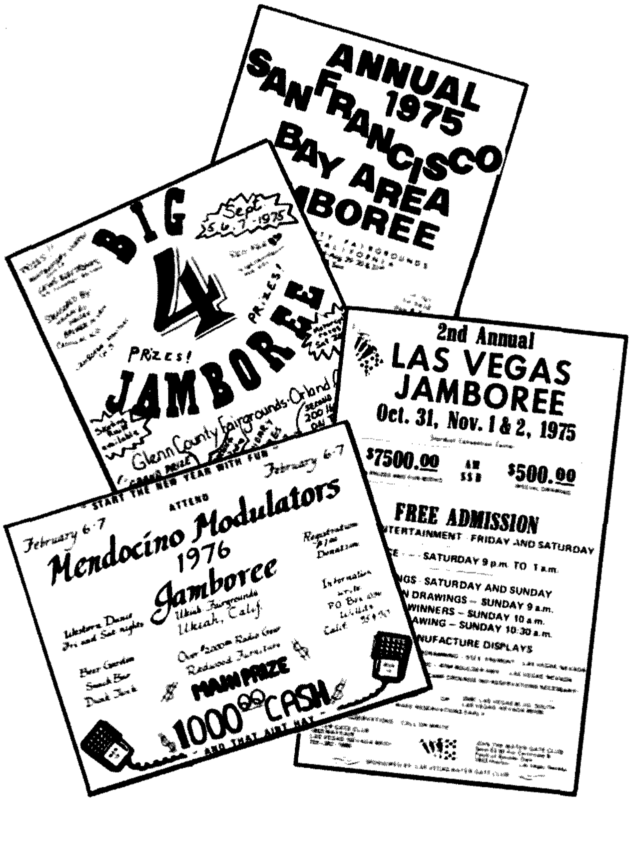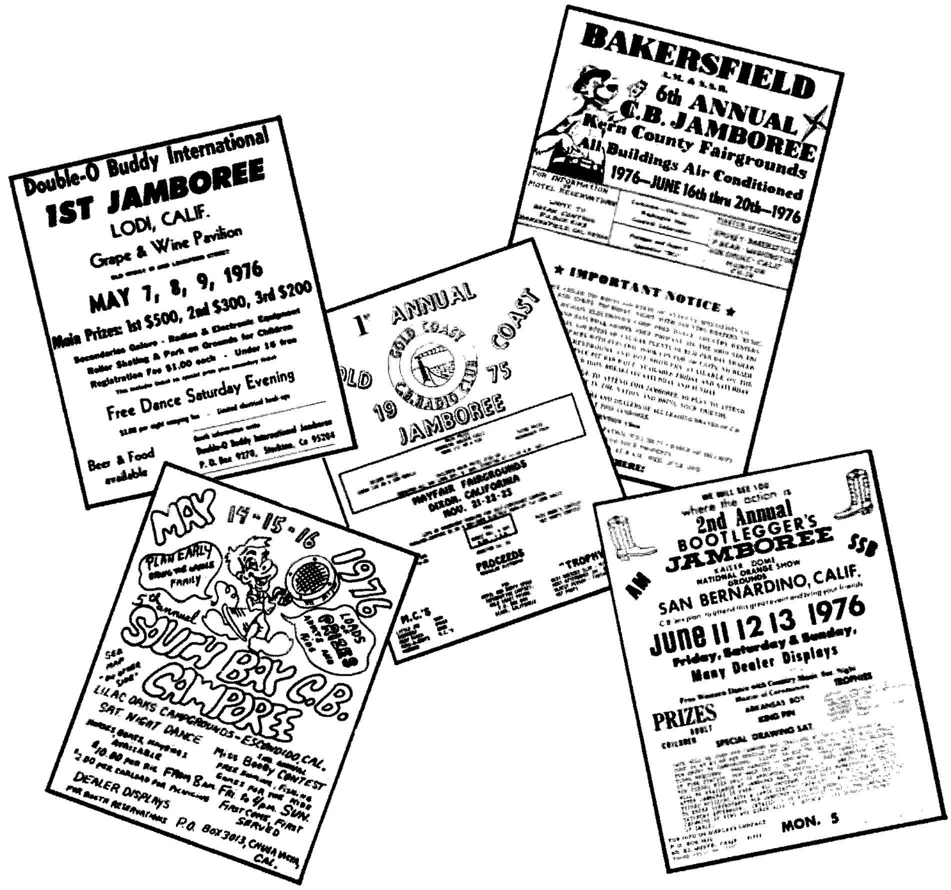
bring in the crowds. The family has a great time and the "good buddy" comes home with a prize or two if he buys enough tickets. No admissions price, no banquet, no expensive hotel room – just the cost of getting there with the family and tent or camper.

I once had the pleasure of writing to the ARRL to tell them of the CB jamboree in Southern California at Bakersfield. This is the largest one in California and last year brought in around 12,000+ people. It cost nothing to park the car and go take a look see, only to camp and buy raffle tickets. The CBers put on these free jamborees to bring in the crowds (and make money), but the ham conventions charge for the same privilege.

A case in point: At the recent ARRL Pacific Convention held at the Royal Coach Motor Inn at San Mateo, California, I telephoned to find out about just going over to see the exhibits. The fellow on the phone told me that I couldn't get in without either buying the banquet dinner or paying ten bucks to see the exhibits. "Outrageous!" I said. Why should I drive a hundred miles to pay and see the exhibits when I can look in a ham magazine and see the same thing? And how is a young person going to scrape up the money to pay for the privilege of trying to get interested in ham radio as a hobby? No wonder there are so many new CBers if this is ham radio's attitude towards new members.

This convention was held in one of the most expensive hotels in the bay area. It would only draw in people with the big money to pay for it, and how many of us are rich these days? I'm sure there are plenty of hams who either cannot afford the fancy convention or are not willing to part with 10 hard earned bucks just to look at radio displays. My letter to the ARRL convinced me that they are not interested in the family aspect of ham radio and neither are those who put on conventions. It is the family activity that has made CB so popular and with that idea in mind here are some suggestions to catch a new ham:

1. Don't charge admission to get into an event for those who just want to browse around. This discourages the people who aren't sure they are that interested and who would leave rather than spend the money. Charge only for the lectures and banquet if you have to make money, but give these people a chance to see what it's all about.

2. Get your ham club to advertise classes for Novices and Generals at places where CBs are sold with the selling point being "Tired of CB? Get into the exciting world of ham radio with its wide open and uncrowded spaces!" When they call to find out more information, invite them over to see your station. Sell them so hard that they will trade the CB gear for ham gear and not cameras.

3. Don't ever have a Novice class without a General class scheduled back-to-back. I attended a class with 7 disgusted fellow CBers who were eager to get into ham radio. After we all worked hard to get the Novice there was no one there to help them set up their stations and no hope of doing what these CBers had really set out to do – TALK. CBers are talkers and they want to get to the talking stage as fast as possible or find something better to do with their time. Get them through that grand canyon between Novice and General quickly so they don't become discouraged and quit too soon.

4. Get the whole family interested in your ham radio club. Have picnics, parties, dances, and get the young blood interested in social activities. It is the young men and women who will be the future hams if there is something to spark their interest. Friendship with other young people is a great start towards sharing the ham experience. Get your wife or lover involved in social parts of the meetings; wives love to get involved with other wives at social gatherings and yak while you're yakking with the men. Here's your chance to sell her on ham radio as something other than the hobby you waste all your time and money on. Save the dull activities for regular meetings and the fun things for the family get-togethers.

I'm certainly not advocating the complete overthrow of ham radio as we know it today. I'd just like to

see interest generated from within the clubs rather than having the FCC constantly tell us "Use it or lose it." There may be a future in their Communicator class license, but it could also lead us right into the mess that CB is in today. Then how do we stop it in our bands?

Wouldn't it be better to get your family and friends participating in your hobby and also become socially active rather than be hiding in the shack all the time? This is a great way to meet the fellow hams you have spoken to but never met. The CBers have done this for years with obvious success, and even the square dancers make a family event out of their hobby. It's time to get rid of the stuffy, antisocial attitude that most hams have about CBers and show them we are friendly types who are interested in bringing new members into our hobby. A typical CBer feels that hams talk like computers in 26 syllable words that scare them away before they can learn what those big words mean. And you'd be surprised the number of hams that I've met through CB because they crave the social family excitement that CB has to offer.

But most of all, don't lose the Novices before they become Generals. They have worked hard and you've wasted your time and turned them off completely if the Novice license expires and no one has come forward to show them how to get into the big leagues. New hams are out there for the asking; it's just a case of showing them that you are real people and are interested in them personally. With a little effort in the right direction those clicks you hear will be energetic new Novices rather than ex-CBers with their Japanese cameras. ■

G. R. Allen W1HCI
80 Farmstead Lane
Windsor CT 06095

Alexander J. Joseph K1ELT
202 Dix Ave.
Newington CT 06111

A 450 MHz Transceiver for Under $130?

-- bringing 450 within everyone's reach

A UHF 450 MHz FM transceiver may be built for less than $130 by following the details given in this article. This basic transceiver is a single channel unit, developing better than 1 Watt of output, and has a receiver sensitivity of at least .3 uV. The unit is totally modular and may be expanded upon at a later date to include a 10 W amplifier, multi-channel operation and scanning capability. All components are readily available and the unit may be constructed by the average amateur in 16 hours or less.

The Basic Transceiver

In a previous article[1], a complete modular two meter transceiver was described using VHF Engineering kits. Because of the success of this approach and because of the large amount of interest and favorable comments received, we decided to use the same approach for a 450 MHz transceiver. Thus, this transceiver uses the transmitter and receiver kits manufactured by VHF Engineering of Binghamton, N.Y. These kits are a good choice since they are inexpensive, reliable, easy to build and perform well.

The Receiver

The receiver used for this transceiver is the VHF Engineering RX 432C. It consists of 4 basic modules: an audio module, a 455 kHz module, a 10.7 MHz module and a 450 MHz converter. The first three modules are the same modules as used in the 2 meter receiver. The converter module is different. The converter module will tune any 2 MHz range between 420 and 470 MHz without retuning and features a varicap controlled AFC circuit.

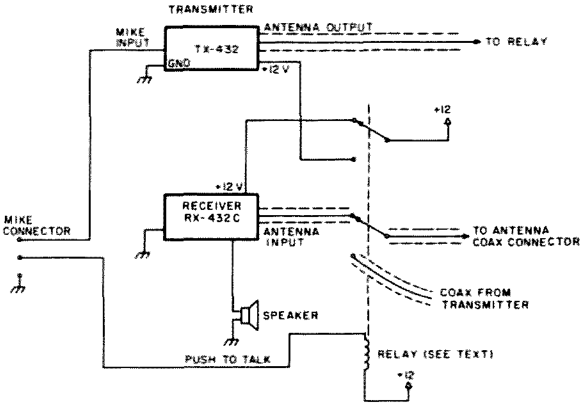

Fig. 1. Basic transceiver connections.

The AFC circuit is designed to control the receiver crystal oscillator and serves to keep it on frequency. It has a maximum control or pull in range of approximately 3 kHz.

Since the receiver, with the exception of the rf converter module, is the same as the VHF Engineering 2 meter receiver, owners of the 2 meter receiver need not purchase a complete 450 MHz receiver in order to receive 450. Only the 450 MHz converter need be purchased and substituted for the 2 meter rf converter board. If the builder wishes, he may use both converters and connect a switch to select one or the other front ends.

Receiver Multi-Channel Option

The basic 450 MHz transceiver as shown in the photographs did not include the multi-channel option since this option did not arrive in time to be incorporated into this article. The 450 MHz receiver multi-channel option differs from the 2 meter option in that a separate oscillator is provided on the multi-channel deck. This option may be incorporated into the basic unit or it may be added at a later date. The option adds 10 receiver channels to the transceiver.

Scanner Option

The latest version of the channel scanner from VHF Engineering scans 10 channels and incorporates a priority channel feature. The priority channel feature causes the scanner to periodically check a designated priority channel for activity when the scanner is locked on another channel. If activity is detected on the priority channel, the scanner will switch to the priority channel until the channel becomes quiet. It then will return to the channel that it was previously locked onto.

The Transmitter

The 450 MHz transmitter uses the same basic circuitry as the 2 meter and 220 MHz transmitters, but contains an additional doubler stage to drive the final directly at 450 MHz. It is rated at a nominal 1 Watt output; however, the units which we have built have given outputs in the 2 to 3 Watt range as measured on the Bird Wattmeter.

The basic transceiver did not incorporate an amplifier in order to keep the cost of the basic unit to a minimum and to keep the current drain down to a point where portable operation using battery power would be feasible. An amplifier may be added later if desired by using the VHF Engineering PA 432/10 10 Watt power amplifier.

Transmitter Multi-Channel Option

The transmitter multichannel option expands the basic transmitter to 10 channel transmit capability. It is the same option as used on the 144 and 220 MHz transmitters.

Construction

The 450 MHz transceiver as shown in the photographs was built into a standard Calectro cabinet and measures 9" x 5¼" x 4½". This cabinet was used because its size and construction would facilitate easy assembly of the transceiver without undue crowding. The receiver was mounted on the bottom panel of the cabinet and the transmitter was mounted on the rear panel as shown. The speaker was mounted on the top panel projecting upwards, but will be moved to a side panel location if an amplifier is eventually used. The top panel would then be used for the 10 Watt amplifier module.

VHF Engineering is now offering a cabinet specifically designed for this transceiver. The builder may wish to purchase the cabinet specifically designed for these units.

Hookup

The hookup for the 450 MHz transceiver is the same as for the 2 meter transceiver as shown in Fig. 1, except that the high pass filter used

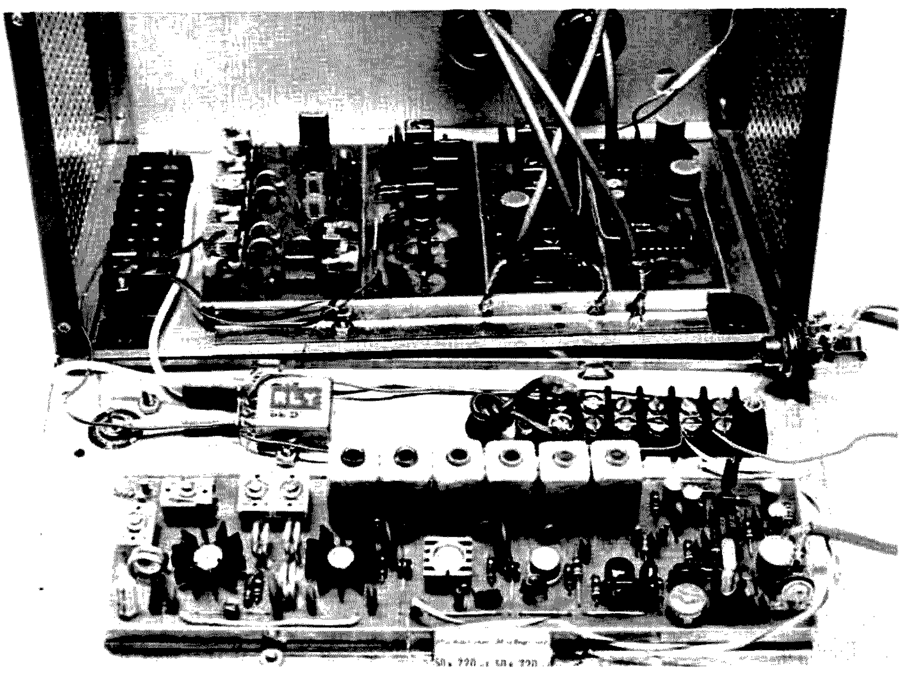

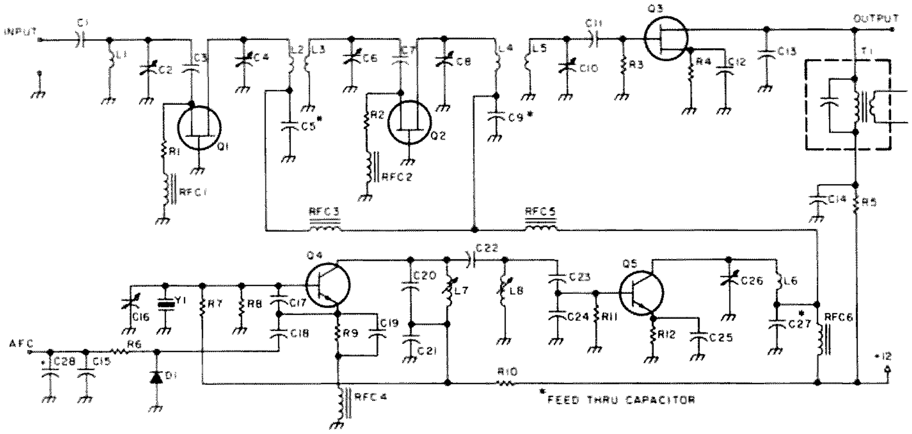

Fig. 2. 432 MHz converter portion of receiver.

in the microphone circuit for the 2 meter transmitter is not needed for the 450 MHz unit. This high pass filter is included on the 450 MHz transmitter board. (Note: All current VHF Engineering transmitters now have the high pass filter included on the PC boards.)

It is important to use a good quality transmit/receive relay to avoid excessive losses at the UHF frequencies. Further, it is important to use coaxial cable (52Ω) from the transmitter and receiver to the relay. VHF Engineering can furnish a T/R relay if you wish.

For a microphone, a medium impedance dynamic unit (also available from VHF Engineering) may be used.

Operation and Performance

The units that we have assembled for use into the WR1ABM 450 MHz repeater have been performing far beyond all expectations. Receiver sensitivity as measured in the lab has been better than .15 uV, while transmitter output power has been running from 2 to 3 Watts. Operation, from both mobile and base station environments, shows that the power output from the transmitter is sufficient to maintain a full quieting signal over most of the repeater coverage area. This transceiver has shown itself to be very rugged and it appears to be equal in performance to any solid state unit now on the market. ■

Reference

[1]G. R. Allen, R. Brown, *73 Magazine,* Jan. 1976, p. 144, *"Module Kits, A Low Cost Home Brewing Breakthrough."*

Parts Lists and Board Layouts

Space does not permit the printing of complete parts lists, board layouts, and detailed assembly instruction. To obtain these, send $5.95 to

VHF Engineering
320 Water Street
Binghamton NY 13902

The microphone and T/R relay are also available from VHF Engineering.

David Brown W9CGI
RR 5 Box 39
Noblesville IN 46060

Space Age Junque II

--updating the 348 by 30 years

If I may make reference to the first paragraphs of Part I of this article (*73 Magazine*, March, 1976, p. 34), it should be easy for you to see why my 12 years of designing, adapting, and modifying around the basic BC-348 receiver package could not be covered in a single article, even if all the failures and quasi-successes were left out – and I assure you that they will be!

It is my purpose in Part II to add one more modification, AFC, that we have found very useful in copying both Oscar and EME signals. In addition, since alignment is required for this modification, and in general for a properly operating receiver, I'll throw in a few tips I have found very handy in securing top performance from any receiver – even if the AFC doesn't interest you. I have the sometimes envied position of having electronics as both my career and hobby, and because of this all of my ideas and modifications have been checked and evaluated both in amateur-equipped shops and in those using more sophisticated lab grade equipment.

My modifications are kept straight by my use of the letter M (modification) and a number (you did M-1, the power supply, and M-2, the audio module, from the March *73* article). Since all modifications are not in all of our receivers at any one time, and the M-# described the order in which I tried things, don't let any missing numbers in these articles bother you. The AFC part to be described in this article, for instance, is M-3A (M-3B was a transistor version).

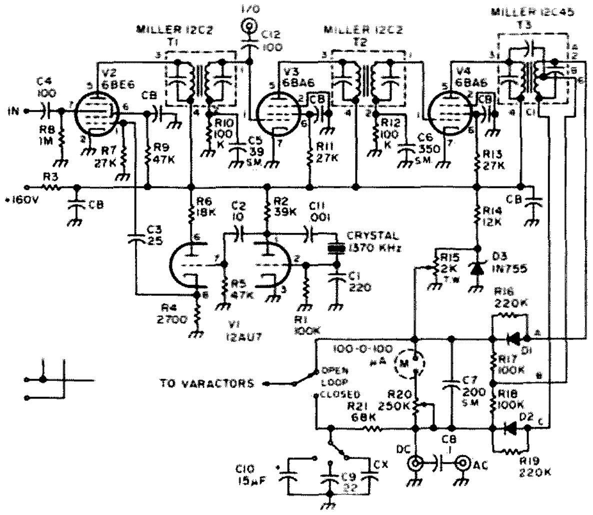

Fig. 1. Schematic.

The M-3A AFC unit is an adaptation from an article by W4EPL (*QST*, March, 1966) for the low i-f mixer scheme, and another by K7DEP (*73*, October, 1973) for the rf discriminator. Whether the overall unit is run "open loop," and only the tuning meter is used for manually tuning and correcting frequency, or you later use another of my modifications (M-4) to change the HFO portion of the BC-348 to a varactor oscillator to run full "closed loop" AFC, this modification makes itself well worthwhile.

When you get your receiver up to full AFC capability, you will wonder how you ever worked some modes without it (e.g., Oscar, EME, RTTY, SSTV, FAX, etc.). At least I don't remember Wayne ever having any articles on growing a third and fourth hand, and, with one on the elevation controls and one on azimuth, I find that both of mine are full – without having to tune a receiver drifting with Doppler, etc.

The AFC is a simple tube-type, with a circuit board layout to remove the pains of punching the chassis, wiring terminal boards, and so forth. The board is laid out so that you can run my 28 V dc filament scheme or use your 6.3 V ac filament line in a present receiver, if that is how you did your BC series rig. The components are all common parts, and within reason I left pad sizes large enough to allow for substitutions (i-f transformers, etc.). The mixer-oscillator alone is worth the time it takes to bring the odd 915 kHz i-f frequency of the BC-348 down to 455 kHz for other uses (panadapters, Q multipliers, etc.). The overall board size was chosen to fit over the dynamotor well where many BC-348 modifications placed the power supply. I have found the external power supply (along with its cable)

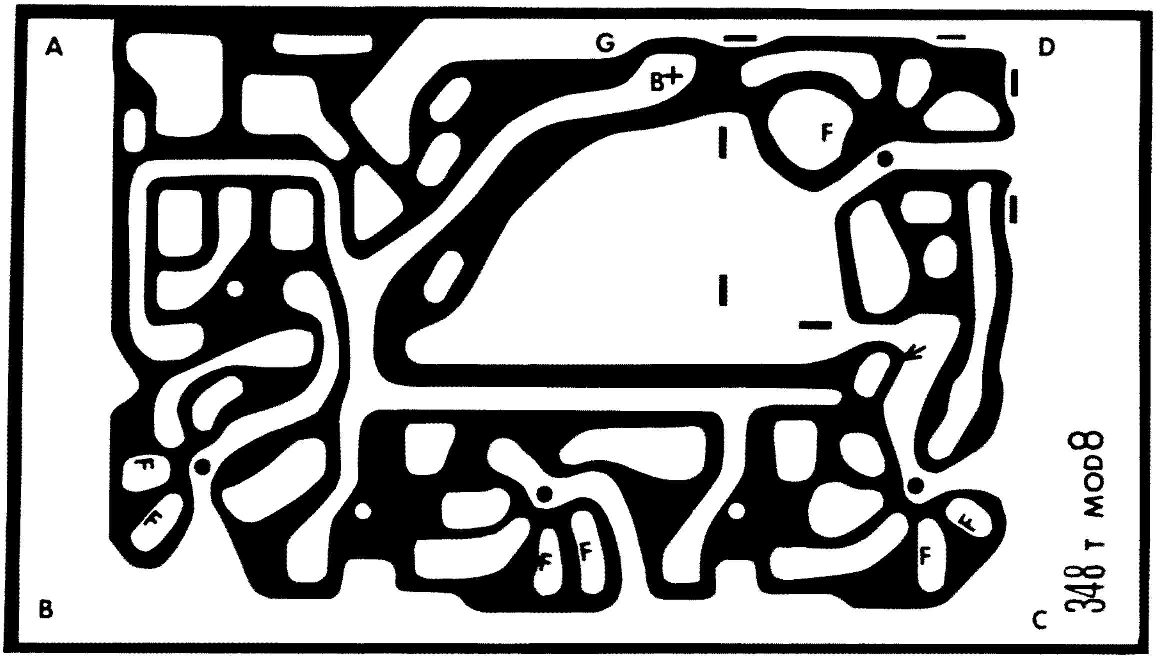

Fig. 2. PC Board (full size).

to be of no special disadvantage, since an external speaker was already called for (meaning at least a two piece rig anyway). If nothing else, a decent size speaker can be used in this layout, versus a pip-squeak tinny type if you tried building it in.

As with all circuit board projects, a minimum of part by part construction help will be written out. Follow the parts list, board layout, and schematic carefully, and you should encounter no problems. A tuned input circuit was intentionally omitted, so you can put a crystal into the unit that is 455 kHz *above* the i-f frequency you are going to feed in and get an AFC action the same as or comparable to mine.

I will make some brief notes on a few of the parts and their action, if for no other reason than to convince the wary that they *can* build projects, substitute parts reasonably, *and* get the projects to work.

Say your junk (sorry – junque) box contains a crystal on 1375 instead of 1370 kHz as called out – fine, the transformers T1 to T3 do have *some* tuning range – try it! R15 is a TW (thumbwheel), small, printed circuit pot of 2k. I made a nice spot for it on the board. If you have a place in the BC-348 (and there are lots of them) to put a full size pot or slider resistor of 2 to 4k for R15 – and you have one – use it! The same goes for R20. A bit harder to adjust a slider? Sure, but time – not money – should control what you try to do in your hobby, shouldn't it? Often you are scared off by a project because you don't have the exact parts, and on this one you shouldn't be. That is one reason (of many) I chose the BC-348 as a starting point. You need not have dreams of dollars with wings (your trade-in value) or crying spells every time I tell you to take drill in hand. The switch for AFC time constants (C9, C10, Cx), and the switch for the loop (open, closed), should be put on the BC-348 front panel, obviously, but the other things coming to the outside world can go where *you* want them. The meter can go in the panel, a box, with the speaker and power supply in that panel, etc. My S-meter (another modification), speaker, power supply, AFC meter, etc., are all in a box separate from the receiver and are at the operating position (my receivers are rack-mounted and remote-tuned).

The parts list describes the parts I used and should be pretty well self-explanatory. One incidental I should mention, however, is that the dc output jack can be used with a pen recorder – or to drive a VCO like the 566 IC, to produce a tone that can go onto any inexpensive tape recorder. I have used the tone to track Doppler shifts on many of the satellites. It (the dc) can also be used as a point that gives demodulated FSK signals (RTTY fans?). Also, the ac output just happens to be the FM (desired or undesired) of the incoming carrier (FM anyone?). The capacitors shown unmarked in T1, T2, and T3 come in the transformers that are specified, the CB are bypasses as called out in the parts list, and R3 is not needed if the unit is run off the +160 V dc (replace it with a jumper wire). The B+ at the connection to the board should be +160 V dc regardless.

If your present i-f is already 455 kHz, or you want a 455 kHz take-off point for other projects, include C12 and the jack. If you have 455 kHz, all of V1 and V2 and components can be deleted; feed 455 kHz into the AFC unit through the jack. If you don't, include C12 and the jack, and use it in the future as a 455 kHz take-off point.

It's built – now what?

Now, as promised, the rundown on noise, alignment, etc., for all receivers. Most of it we have learned the hard way, having either evaluated it with lab grade equipment and then duplicated it using somewhat more crude instruments, or vice versa. Either way, the ideas work and have been proven out *both* ways, so you can have some faith in the premise that they are worth your time and trouble.

First, the AFC unit, since it is the simplest and its initial alignment can even be done while it's completely out of the receiver. Hook +160 V dc

to the +160 point (B+) of the circuit board, and the +28 V dc or 6.3 V ac to the filament point, depending on how you put the jumpers into the board. M, the meter, should be a zero center type; a 100-0-100 uA was used. If new transformers are used, feed in the same frequency unmodulated carrier as that of the i-f you intend to connect to (BC-348, 915 kHz), and place the proper crystal into the socket (BC-348, 1370 kHz). A VTVM set for minus (-) dc at VI pin 2 will tell you if V1 is oscillating as the grid bias varies when you place the crystal into the socket. With the new LFO running and a moderate signal fed in, align T1 and T2 for maximum negative voltage at pin 1 of V3 and V4, respectively. Remove generator input. Set R15 for about 6 V dc at the open loop terminal of the loop switch (may have to be varied later with varactors chosen). Set R2 for a zero reading on the meter for now. Connect the signal generator again and, using the rf probe on a VTVM or scope, tune the primary *only* of T3 for a maximum of 455 kHz across the secondary of T3 (A to C). Do not attempt to zero the secondary of T3 at this time. That's it for the AFC unit for now.

The basic receiver alignment and noise:

The receiver referred to here is our BC-348 series, but the ideas and methods used work equally well with any receiver. First, alignment. To do a good job of alignment using ham grade test equipment, let the generator stay on a *minimum* of 24 hours, and the receiver at *least* one hour. Our receiver runs a whole day, and the generator, a not too shaggy military item, is *always* running!) Pick the tuning range of interest. I used the 15 to 15.7 MHz region for my 2 meter convertors, such that 145 MHz equalled 15 MHz, 145.1 MHz equalled 15.1 MHz, and so forth. If you want a top-notch tunable i-f for convertors, give up the idea of using the same receiver as a general coverage instrument. We aren't going to "kill" the rest of the receiver – just put its best kind of performance where it counts.

Use 15 MHz WWV to very accurately set your oscillator trimmer, and allow one minute after each adjustment to be sure it stays put! Compression trimmers sometimes "relax" after your mechanical pressure, as well as torque, leaves them. If you have a counter, put its probe "near" the grid of the mixer and not down the oscillator's "throat," as that would pull the oscillator off frequency from where it will be when you remove the counter. If you are going to use the crystal filter or some other i-f filter, have it in and running at this point. Monitor the AGC line in the receiver – don't use your ears to judge alignment or improvement! More negative AGC is more signal. Keep the generator low enough in output to let the meter vary with i-f transformer adjustments. You want the 915 kHz i-f lined up on the crystal filter or filter you are using, so rock the generator around slightly and look for improvement – output. You won't get such a gain drop when the filter is switched in this way, and those old crystals do age in (one of mine is at 913.8 kHz). Align slowly and carefully, getting every tenth of a volt more negative AGC that you can. Work from the audio end toward the rf in

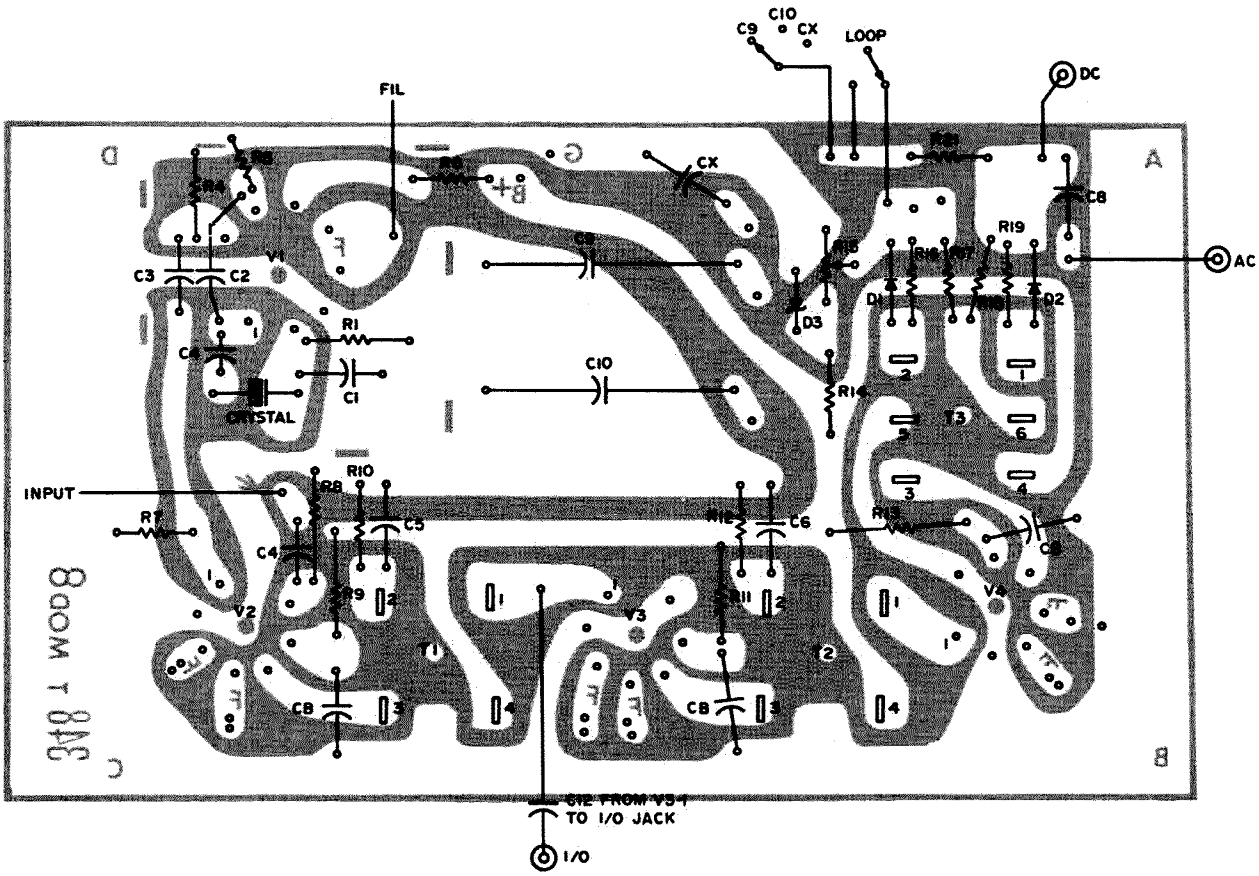

Fig. 3. Component layout. Some resistors are mounted standing up (e.g., R5). R2 is on copper side (B+ to pin 1 of V1).

and do it several times, as each time may gain a bit more. Remember, a volt of AGC increase is a lot of signal gain carried to the detector.

On my BC-348, a good AGC reading to maintain seems to be about -3 V dc on a 0-10 V scale. Adjust a slug or trimmer to get maximum negative AGC, then reduce the generator to return to the -3 V dc reading, then do another slug or trimmer, then return to -3 V dc, etc. This seems to maintain a good rf level at the detector, without saturating or "cramming" it. The result is a meter that gives good smooth changes that are easy to see and follow as you are adjusting. Follow this procedure throughout the low i-f (915 kHz), and then tune the generator and receiver to the upper limit of interest (15.7 MHz).

At this point, align the trimmer capacitors on the rf tank circuits. You will wreck the 13 to 18 MHz tracking and gain ability doing so, but the 15 to 15.7 MHz region will be set up at its best, as we wanted. Also, the rest of the bands remain unchanged (for those who care). You are setting up the maximum gain L-C condition for your tunable i-f, and not trying for a general wideband receiver.

With the alignment done, change the front panel rf connector to a BNC or UHF type to mate your convertor cable. Remove the 100k or 470k resistor from the center of the old antenna input to ground, and discard it. You are no longer going to have this point tied directly to an antenna, much less to a static noisy aircraft antenna, and the resistors change value – sometimes going down to 1k. Replace the wire from that connector to the first rf can, and replace it with a short piece of coax (RG-174 is fine), with the ground tied at the panel end only. While in this region of the receiver, short the wires on the pot mounted to the end of the main tuning capacitors (this pot helped keep gain variations down from band end to band end – by reducing gain!). Another improvement, if only small, will be noticed.

As for the noise cures, several noted here apply to all receivers. Mass produced goods just can't get handbuilt care – another reason for rolling your own – even if you start with the hard mechanical part already done.

The 991 gas voltage regulator used to regulate the B+ to the oscillator is the best little rf "hash" generator you can find, and there it sits, right next to the rf and 1st mixer grids. (Nobody said the BC-348 was perfect as purchased!) The 991 or a suitable zener diode replacement must be moved to your power supply, but be sure to remove the 991 at all costs. Clip one of its supply resistors so you don't ever accidentally replace it. Use another wire of the power supply cable to bring this oscillator B+ up to the receiver. A .1 mF capacitor to ground should be added to the point where this B+ line enters the oscillator can, where it enters the receiver, and where it leaves the power supply. Now the oscillator should be running on dc at least, and the ton of hash stays "canned" at the power supply.

The improvement to the whole receiver (other bands, too) in the noise and racket department should be dramatic (and include the lack of hum, if you used the +28 V dc on the filaments as suggested). While on the subject of the +28 V dc, you can now try our most noticeable improvement for the amount of effort! Tune in a fairly weak but steady station, preferably voice (so you don't need to concentrate on CW). Put your dc voltmeter on the +28 V dc line and begin to reduce the +28 V dc by turning the pot down on the regulator board. The gain available in the audio module will go down, as well as the thermionic emission from each tube. The oscillator *may* move frequency slightly, and the overall noise goes down. Correct any frequency shift, and turn up the volume control only. Hear the difference?

An SASE has become mandatory since Uncle Sam went to his unlucky "13," but I *will* try to help anyone with problems. ■

Parts List

Printed circuit board (per 1:1 template)
Assorted jacks to suit builder (outputs/inputs)
V1 – 12AU7 – osc.-buffer
V2 – 6BE6 - mixer
V3 – 6BA6 – low i-f
V4 – 6BA6 – low i-f
T1-T2 – Miller 12C2
T3 – Miller 12C45
D1-D2 – 1N914
D3 – 1N755 – zener
R1 – 100k ½ W
R2 – 39k ½ W
R3 - as req.
R4 – 2700 ½ W
R5 – 47k ½ W
R6 – 18k ½ W
R7 – 27k ½ W
R8 – 1 meg ½ W
R9 – 47k ½ W
R10 – 100k ½ W
R11 – 27k ½ W
R12 – 100k ½ W
R13 – 27k ½ W
R14 – 12k ½ W
R15 – 2k lin. pot
R16 – 220k ½ W
R17 – 100k ½ W
R18 – 100k ½ W
R19 – 220k ½ W
R20 – 250k lin. pot
R21 – 68k ½ W
C1 – 220 pF s.m.
C2 – 10 pF disc
C3 – 25 pF disc
C4 – 100 pF disc
C5 – 39 pF s.m.
C6 – 350 pF s.m.
C7 – 200 pF s.m.
C8 – 0.1 uF mylar or paper, 100 V
C9 – .22 uF mylar or paper, 100 V
C10 – 15 uF elect., 25 to 50 V
C11 – .001 uF disc
CB – .1 to .33 uF mylar or paper, 200 V
C12 – 100 pF disc
Assorted switches to suit location and builder
Loop (open/closed) – DPDT – second half to lamp indicator
Loop (capacitor) – SP3T – slide or rotary
Meter – 100-0-100 uA – size and shape to fit builder req.

by Wayne Green W2NSD/1

I/O EDITORIAL

uP IN OSCAR

The next Oscar is being designed and built in Germany with help from Canada, and they're putting in a microprocessor . . . RCA COSMAC CDP1801 . . . to help sort out the input stations running more power than they should . . . one of the more serious problems which have been bothering Oscar 7 on the 432 MHz uplink.

The uP will also control the attitude of the satellite with magnetic torquing, spin rate and boost motor control, transponder times on and off, format of the telemetry beacons plus analog to digital conversion of signals and commands.

By the time Oscar 8 is up there, a good many ground stations should be running with uP control and probably a number of automatic contacts between uP operated stations. Even a simple microprocessor will let you know exactly when Oscar is accessible . . . and exactly where . . . even what Doppler shift to expect. It will control your antennas and keep them aimed exactly at the satellite. Hmmm . . . one hundred countries worked in one hundred seconds? Maybe we should offer a certificate.

OPPORTUNITIES

Hardly a day goes by when I don't get a phone call from someone wanting me to answer some questions in the microprocessor field. As more and more businessmen become aware of the possibilities of these computer systems, anyone with a good knowledge of them will be able to do very well.

I get calls from microcomputer manufacturers asking if I know people who might be able to work for them in developing their equipment and software. Other manufacturers are looking for people with enough uP background to open computer stores and sell their systems. And about once a day I get a call from a businessman who would like to have a uP system put together and programmed for a particular application . . . can I suggest what equipment would be best and how he would get the programs? Other manufacturers are desperately looking for people who can write and help them put together ads, instruction books, articles and brochures.

My answer to them is the obvious one: get in touch with some of the authors of articles which appear in *73*. About the *only* way to establish a reputation in a brand new field is by writing articles and books . . . publish and prosper. It's nice not only to be paid for the article, but also to have manufacturers and businesses fall all over you with job offers and consulting assignments.

Okay, you'd like to make some money writing . . . and it wouldn't look bad on your resume . . . or perhaps you'd like to get out there and really get going in the uP field and be in the line for the big money that is going to be here . . . and that means you want to build your reputation . . . so you wonder what to write about.

Once you get started writing you'll find it impossible to stop. There is so much to cover that it is endless. If you've gotten an Altair up and working you've managed to solve a dozen or a hundred problems. Hopefully you've kept a day-to-day diary of your progress (or lack of it). This didn't work at first and you found the problem . . . a whole lot of other people are desperate to know how you got that solved. Like all the time I wasted with my Altair trying to get it to interface with the Southwest Tech TVT-II . . . what a hassle! It turned out that the TVT was sending out lower case letters to the Altair, but was printing upper case on its screen. Once someone suggested using the shift key on letters, there was no further problem. Little problem, big deal.

Sphere system users have had their share of miseries and there are a lot of us who would like to learn from them. Ditto Imsai and all the other systems. Like how many of you have been able to get a teletype working right off with your system? Or a cassette recorder? We still don't have the ability to put a program on a tape without dumping everything, but we'll get it solved one of these days.

Maybe you've tried the Ohio Scientific learning system . . . what was your experience? How about terminals . . . all of us need some perspective on the various terminals available . . . HAL, SWTPC, Interactive Systems, etc. How about using some surplus terminals such as the Sanders, Burroughs?

Software . . . readers are gradually getting used to the idea that they are going to have to program their systems, but they don't know much as yet about where they will get the programs or how to learn to use them. Where can the reader get all of the free programs that are available? What books are best to learn to use FORTRAN . . . BASIC . . . etc?

BEST uP YET?

We've had several letters from readers all excited about the Levy microprocessor in the June issue (page 106), saying that this is by far the best microcomputer design yet and the *first* how-to-build-it uP article in *any* ham magazine. A letter from Pete Stark K2OAW, who is an expert in this field since he teaches it in college and has several books out on computers and programming, was particularly welcome.

FACTORY RECALLS

A call came from Bill Godbout with a request that all purchasers of his Econoram kits (before June 15th) drop a card to Godbout with the invoice number of their order. It appears that the kit was too good, in a way. It works a bit too fast for some of the systems and Bill has a retrofit kit which will fix up any problems purchasers may have been having or might eventually have. How about *that* for an advertiser?

WORD PROCESSING

You'll be seeing a lot of the term "word processing," so it will help if you understand just what this means. Good luck . . . for in the computer field it has a wide range of meanings and when you bring up word processing (can we shorten that to WP for now?) you still have to make sure that you and your friend are talking about similar things.

One person will think of WP in the context of setting type for a book or magazine. It is being used for this, and such uses will be growing rapidly. In this case you set your words on a video terminal and then, when you are satisfied, you can put them on tape to be set by a photo typesetting unit.

The use of a video terminal allows a lot of flexibility. With a good WP program and some "intelligence" to use the program, you can move characters, words, sentences or even paragraphs around as you please. Once you are done, you can have the finished work printed or put on some memory medium for later printing. This is one very good application for low cost microprocessors.

Your WP program can be made to justify lines or to have them fit around illustrations, as in magazine pages. Some magazines and newspapers are using such systems to set and arrange whole pages at a time. These systems are not inexpensive . . . yet.

Perhaps you can see why a secretary or a businessman would go for a WP system . . . the savings in typing letters can be enormous. One error on a letter . . . or a change in a shipping date . . . does not force the whole letter to be retyped. Sentences or even paragraphs can be held in memory and put in letters easily. It is the invention that could do away with the typewriter.

Suppose you want to send essentially the same letter to fifty firms (or congressmen). A typist had to type out the fifty letters before . . . now the WP system will turn them out quickly with but one typing. You can even have the mailing list in memory and tell the processor to send one letter to each on the list. A system along this line is used to generate those letters which appear to be typed directly to you . . . *Reader's Digest* is big on this idea. Blanks are left in the letter form to be filled in by the processor with your name and address.

How much stock would you buy in a typewriter company when you can see word processing on the way? We're looking at possible video terminal prices on the order of $500 (eventually half that) and line printer ones of $1000, which can handle dozens of terminals for all but large scale production of form letters.

CREDIT DUE

Several readers have asked about the Biorhythm computer program I mentioned as being available in my review of the MITS Altair Convention. I got my copy from In-Touch Systems of El Paso and my thanks to Richard Bandat for his consideration. I also got three business programs, but haven't been able to use them as yet. The *73* uP lab is just now being finished . . . once it is in shape we'll have a lot of equipment up and running and be able to start testing out programs for possible distribution.

Recent equipment received for the lab includes two Imsai computers, a MITS disc system, a Burroughs video terminal, and a Wavemate Jupiter II computer. The Jupiter is on test by John Craig.

D. W. Ishmael WA6VVL
1118 Paularino Ave.
Costa Mesa CA 92626

PROM Memory Revisited

-- getting back to May's CW blockbuster

The thought of using a CW memory did not occur to me until Greg Kordes WA6EEB demonstrated his keyer/memory at the local radio club (Newport Amateur Radio Society, NARS). Greg's keyer/memory utilized a 512-bit random access memory (RAM) which was easy to operate and program, and generated considerable interest.

Here was a piece of equipment which would complement my keyer, be fun to operate, and store those often repeated parts of the QSO.

During the following weeks, I sent for some specification sheets and resurrected old ham magazines looking for related articles. When I first started, I had no idea what exactly I wanted or where I was going. All I knew is that I wanted a keyer with a CW memory and that I had several articles I could use for reference.

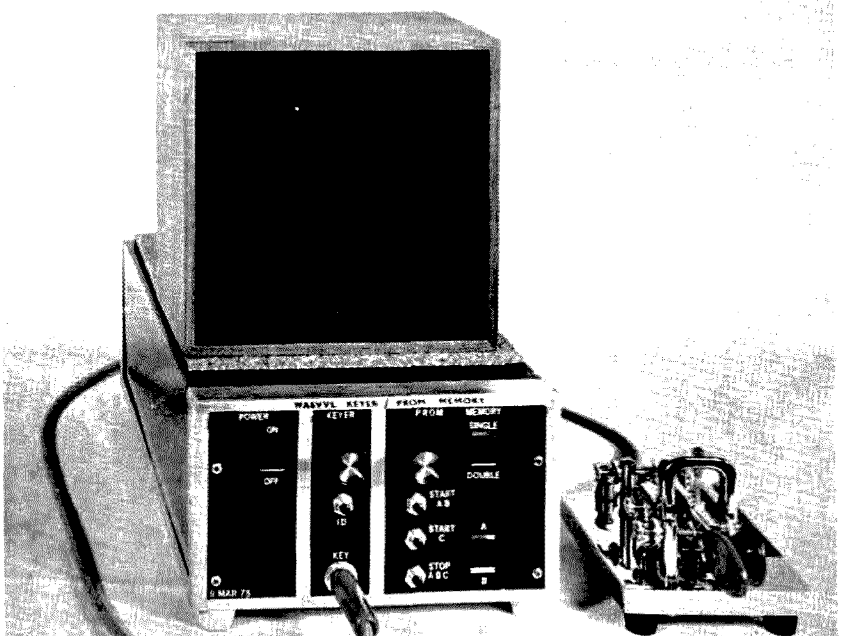

Photos by Alan Burgstahler WA6AWD

My first attempt at building a keyer/memory was a 2560-bit keyer/RAM memory which utilized ten 256-bit RAMs. Memory retrieval was either automatic, using a decade counter and decoder to select the appropriate chip, or manual, using a ten position thumbwheel switch. An LED readout let me see which RAM was being programmed or read. My first attempt was about 90% completed and operating before I found that I was programming the same information into the RAM memory every time I turned on the power.

At this point, I determined that *my* CW operating habits did not require the versatility of the RAM and that my memory requirements could be satisfied with one or more programmable read only memories (PROMs). Although the control logic for the read modes are similar for RAMs and PROMs, PROMs offer a non-destructible memory (within their recommended operating parameters) after their initial programming, without the need to frequently refresh the memory as is necessary with RAMs.

My next CW memory was a self-contained 1024-bit PROM memory utilizing four 256-bit Intersil PROMs[1]. This was so successful that I decided to integrate the PROM memory with the WB4VVF accu-keyer[2].

The memory was increased an additional 1280 bits for an effective memory capacity

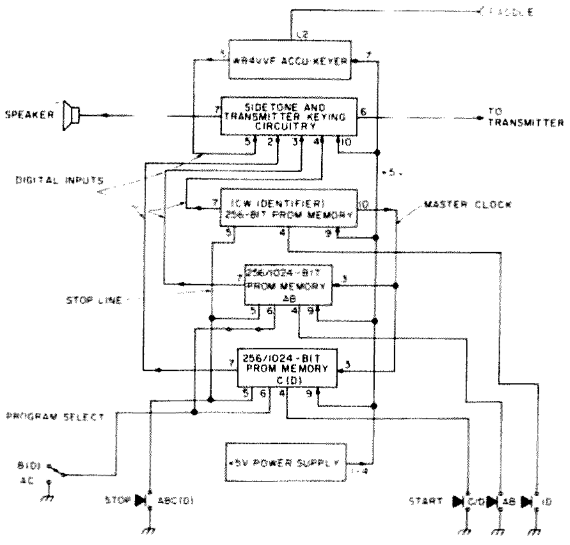

Fig. 1. Block diagram, keyer/memory.

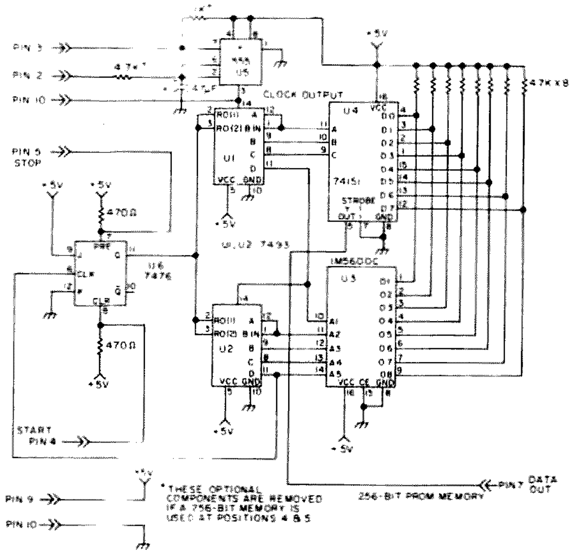

Fig. 2. 256-bit PROM memory.

of 2304 bits (2304 bits = 2 x 1024 bits + 256 bits). Memory expansion is simplified by adding additional memories as the reader's memory requirements, space and pocketbook allow.

The keyer/memory described is completely self-contained and is designed to drive grid-block keyed transmitters with key-up voltages not exceeding -100 volts.

Fig. 1 shows a simplified block diagram of the keyer/memory.

Memory

The PROM memory section (boards 4-6) contains one to three memory boards using two Intersil PROMs, an IM5600C (256-bit, 32 words by 8 bits) and/or an IM5603A (1024-bit, 256 words by 4 bits) as memory elements.

A 256-bit memory, used as a CW identifier, contains a "master clock" for the memories. Both memory boards are laid out for a clock, but the components are not installed on boards 4 and 5. The schematic of the 256-bit memory, Fig. 2, shows the similarities in logic between this and my May article. 256-bit PROMs programmed for the previous memories can be used.

The 1024-bit memory contains approximately 90 characters of memory. The control logic for the 1024-bit PROM is such that two 512-bit programs can be selected by a front panel SPST program select switch (A/B). Removing W5 on the mother board (Fig. 6) and W3 on the 1024-bit memory, and adding W2 and W4 on the 1024-bit memory will enable the entire 1024-bit program instead of two 512-bit programs. Looking at the schematic of the 1024-bit memory in Fig. 3, notice that the method of addressing the PROM (U3) and U4 is slightly different than that of the 256-bit memory, necessitating a change in the programming format for the PROM. The larger PROM requires eight programming cards.

Except for a clock, the memory boards are completely self-contained with start/stop circuitry, address counters, parallel to serial conversion and PROM.

Memory retrieval for all memories is initiated with the appropriate program select push-button switch. The program(s) can be stopped at any point with the stop push-button switch.

Sidetone/Transmitter Keying Circuitry

The keying circuitry in Fig. 4 is essentially the same as that of my May article, with the addition of U2, an NE555 timer IC which is used as a sidetone oscillator,[3] and its control transistor Q2. A small speaker may be mounted on the board or the chassis, or connected through the external speaker jack (as illustrated).

Unused digital inputs (pins 2-5) must be grounded to prevent the transmitter from being keyed. Since no provisions have been made on the board or mother board for grounding the unused inputs, the output pin(s) of U1 (3, 6, 8 and 11) corresponding to the unused input(s) are not inserted into the socket.

Keyer

This position is "up for grabs." The reader may use his favorite keyer circuit or the accu-keyer which is adequately covered in the 1974 ARRL *Handbook.*[4]

My adaptation of the accu-keyer is virtually identical to the original with the exception of the board and removal of the power supply components (C3, C6, CR2, R13 and VR1 in the ARRL *Handbook*).

The speed controls for the keyer clock and memory clock can be ganged or mounted separately. I chose to use an SPDT switch and use both techniques (single/double). If your keyer utilizes a nonsynchronous clock, the memory master clock may be used for your keyer also.

Power Supply

The 5 volt supply illustrated in Fig. 5 satisfies the power supply requirements of the keyer/memory, supplying 600-900 mA with all boards in place.

As can be seen in the photograph, I used a 6.3 V filament transformer for the 5 volt supply. These transformers, when used with 5 volt three-terminal regulators, do not provide enough unregulated voltage at the input of the regulator to work satisfactorily at nominal line at high supply currents. There also seem to be large variations between similar transformers. The previous PROM memory was marginal at low line while the keyer/memory did not begin to regulate until 125 V ac line voltage. No problems with the keyer/memory have been experienced operating at 95 V ac with this transformer. For this reason and to keep U1's dissipation low, I did not replace the transformer. However, good design dictates a transformer with a secondary voltage of 7.5-8.0 Vrms and I would recommend using it.

Construction

The keyer/memory is housed in a BUD 12" x 7" x 4" aluminum minibox. The majority of the components are mounted on six single-sided 5½" x 3" glass-epoxy circuit boards. The boards are fabricated to fit standard 10-pin card edge connectors with .156" spacing. The boards, in turn, plug into a 6" x 3½" single-sided glass-epoxy mother board mounted against the front panel with mating 10-pin card edge connectors.

Using this modular approach, I have changed individual circuit boards and revised the mother board without affecting the front panel wiring. Also, the boards may be quickly removed for repair or inspection in just a few seconds.

The boards, in order of their appearance, are as follows:

1. WB4VVF accu-keyer.
2. +5 volt logic power supply.
3. Sidetone/transmitter keying circuitry.
4. 256/1024-bit PROM memory.
5. 256/1024-bit PROM memory.
6. 256-bit PROM memory/CW identifier (includes the master clock for boards 4, 5 and 6).

The power transformer, fuse holders, ac connector, panel switches and controls are mounted on the aluminum minibox.

There are 27 integrated circuits and approximately 68 discrete components.

Again, sockets are advisable due to the cost of the integrated circuits and PROMs. They not only speed troubleshooting when

Fig. 3. 1024-bit PROM memory.

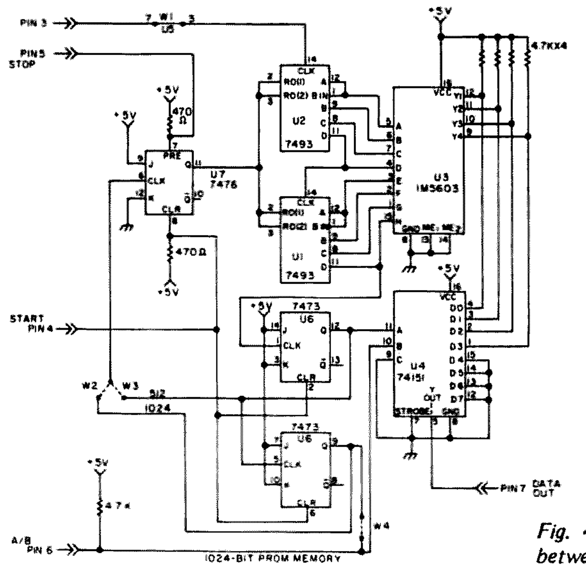

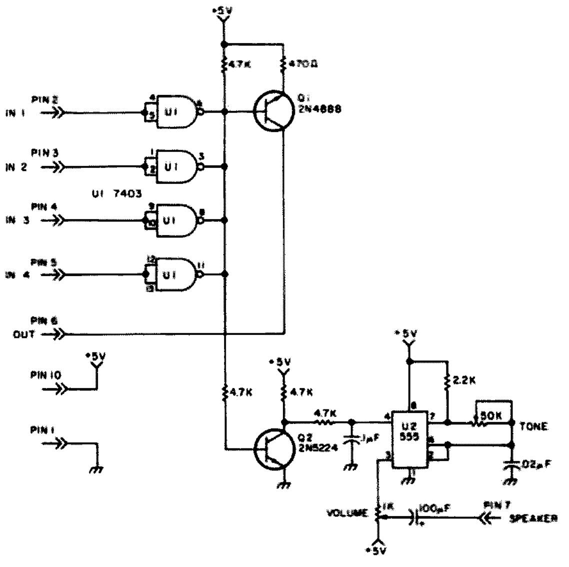

Fig. 4. Sidetone/transmitter keying circuitry. Note: Speaker is connected between +5 V and speaker out.

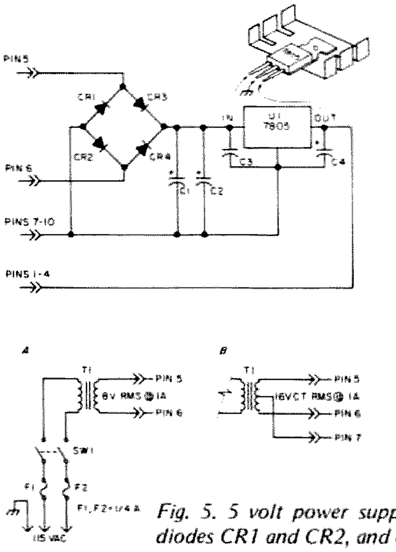

Fig. 5. 5 volt power supply. If a center-tapped transformer is used, remove diodes CR1 and CR2, and connect accordingly.

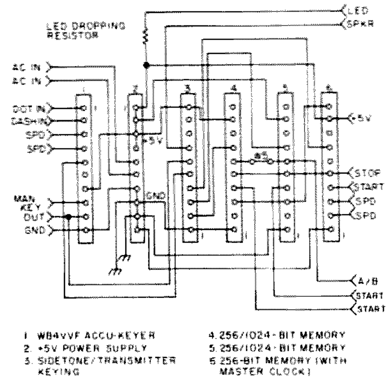

Fig. 6. Mother board.

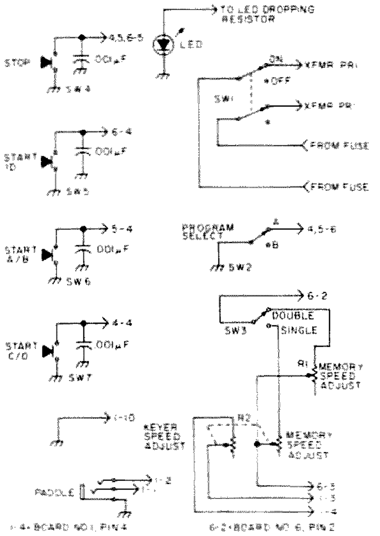

Fig. 7. Front panel wiring.

the need arises but also avoid overheating during the soldering operation.

After assembly, check the power supply voltage *before* plugging in the remaining boards.

If all parts were purchased new (based on the Cramer, Newark, and/or Allied industrial electronics catalogs) and you built your own printed circuit boards averaging $6 apiece, the total cost would approach $225. My total investment, purchasing most of the parts at electronic discount/surplus stores in the Costa Mesa area, was $100. It could have been lower but I made some mistakes along the way and changed design in midstream more than once.

Printed Circuit Boards

The artworks for all boards were prepared at home using commercially available artwork aids. They were taped 2:1 and photographically reduced at a local photo shop. The artworks were small enough to reduce two on one positive, cutting costs a bit.

Using direct positive photoresist-coated boards available from the Vector Electronic Co. (CU70/45WE-1R, 7" x 4½" 1/16" single-sided glass-epoxy), the boards were exposed in my darkroom (bathroom) using a positive. Following the instructions that came with the boards, I was able to make some very outstanding circuit boards.

After cutting and drilling, I tin-plate the finished board with Shipley LT-25 chemical plating solution[5].

I usually get better results etching with ferric chloride than with ammonium persulphate.

With careful planning and the above materials, I can produce a production quality board for approximately $6, which includes the photographic reduction of my artworks.

Programming

All of my PROM memories have utilized Intersil bipolar PROMs whose programming procedure forces a resistive shaft through the junction of one diode in the memory cell, resulting in a logic 1 at selected locations in the memory as determined from the user's program. Once the memory cell has been programmed to a logic 1, that bit cannot be altered (reprogrammed).

Although design data sheets and application notes are available from the manufacturer and distributors which describe the programming procedures (electrical) in detail, the reader will probably take advantage of the custom programming services offered through the manufacturer or distributor. Programming methods vary from

Fig. 8(a). PC board, 256-bit PROM memory (full size).

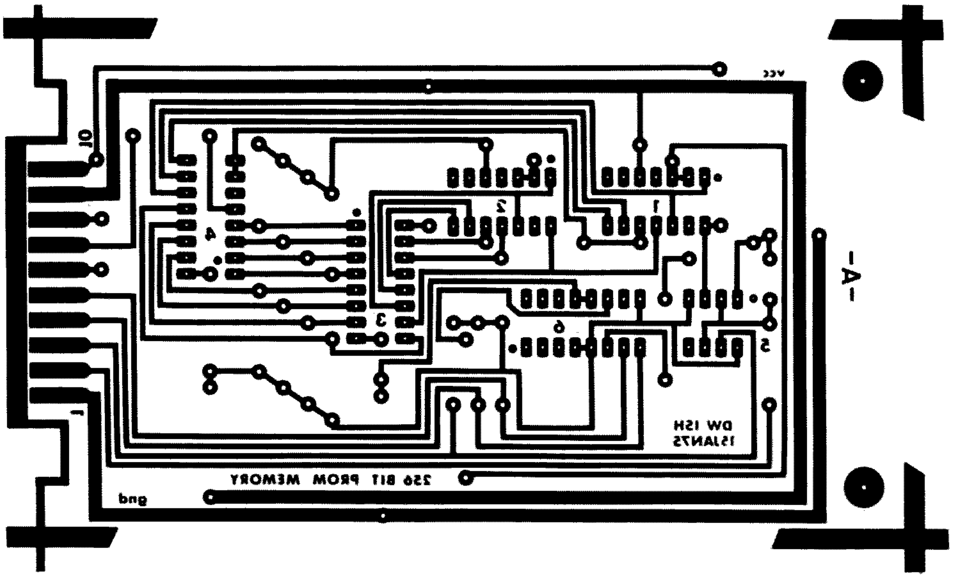

Note: PC boards are top views, or as viewed from the component side. Component layouts are bottom views, or as viewed from the circuit side.

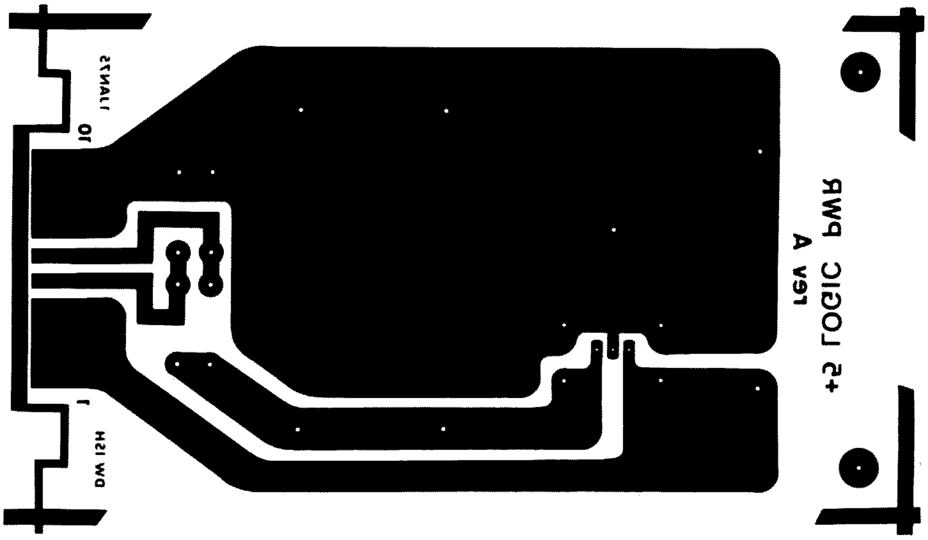

Fig. 10(a). PC board, +5 volt power supply (full size).

manufacturer to manufacturer and from type to type so that the reader will have to do some homework and some independent research in selecting PROMs. Send for the design data sheets and application notes corresponding to the PROMs selected. READ THESE PROGRAMMING INSTRUCTIONS CAREFULLY AND FULLY UNDERSTAND THE ADDRESS METHODS AS PROGRAMMING ERRORS CAN BE COSTLY. The quoted prices from R. V. Weatherford included programming costs and they supplied the programming cards and instructions.

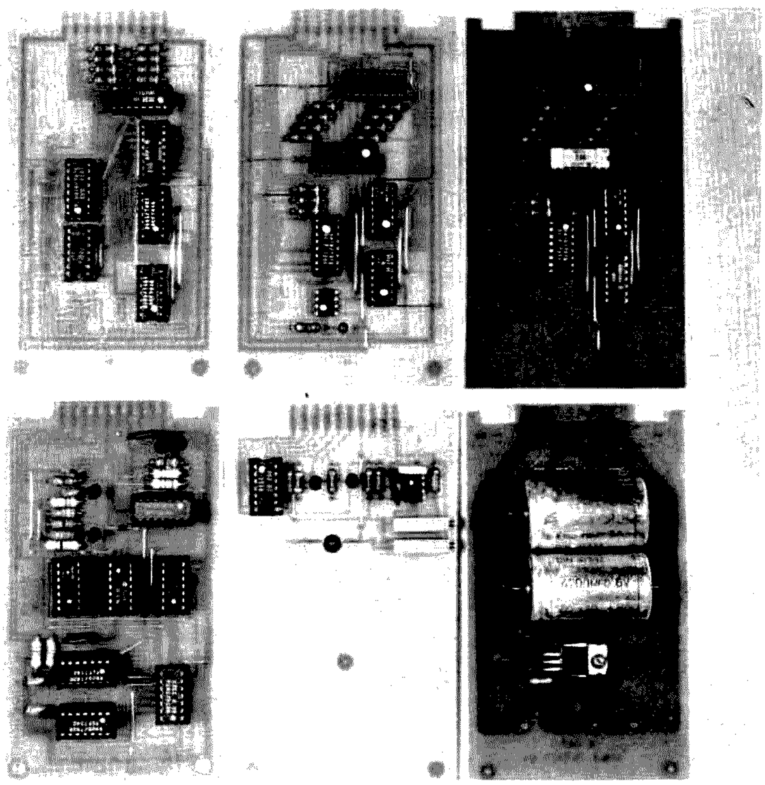

Circuit boards. Clockwise, from upper left: 1024-bit PROM memory, 256-bit PROM memory w/clock, 256-bit PROM memory w/o clock, +5 V power supply, sidetone/transmitter, Accu-keyer.

Standard spacing should be used in writing your program: 7 bits for a word space, 3 bits for a letter space, 3 bits for a dash, and 1 bit for a dot.

Conclusion

The size of the memory and the PROM(s) used depend entirely upon how complicated your memory access is, your pocketbook, and your CW operating habits. PROM memories, because of their nature, are not versatile. For the CW operator requiring a versatile memory, PROMs are not the way to go unless a large memory is used which can be easily accessed. The more complicated your access scheme, the more complicated the memory manipulations during a QSO. Memory access in my case is through push-button switches, making it fast and fairly foolproof.

There have been about a dozen "good" articles on keyers with memories which have appeared during the last three to four years, and yet none of them has really satisfied my memory requirements. They were, however, invaluable as food for thought. The keyer/memory described in this article is the result of reading and partially building many of these articles which have appeared in *73*, *Ham Radio* and *QST*.

My primary purpose in writing this article was to demonstrate another method of building a CW memory so that, if one was interested, he could use this and other articles to build his own, tailored to his operating habits. The keyer/memory described has been designed specifically for my CW operating habits and is not meant to be a "better mousetrap."

There is little difference when switching from "fist" to memory other than character and letter spacing. No one has noticed a difference to date, or commented on it if he has.

No RFI problems have been encountered

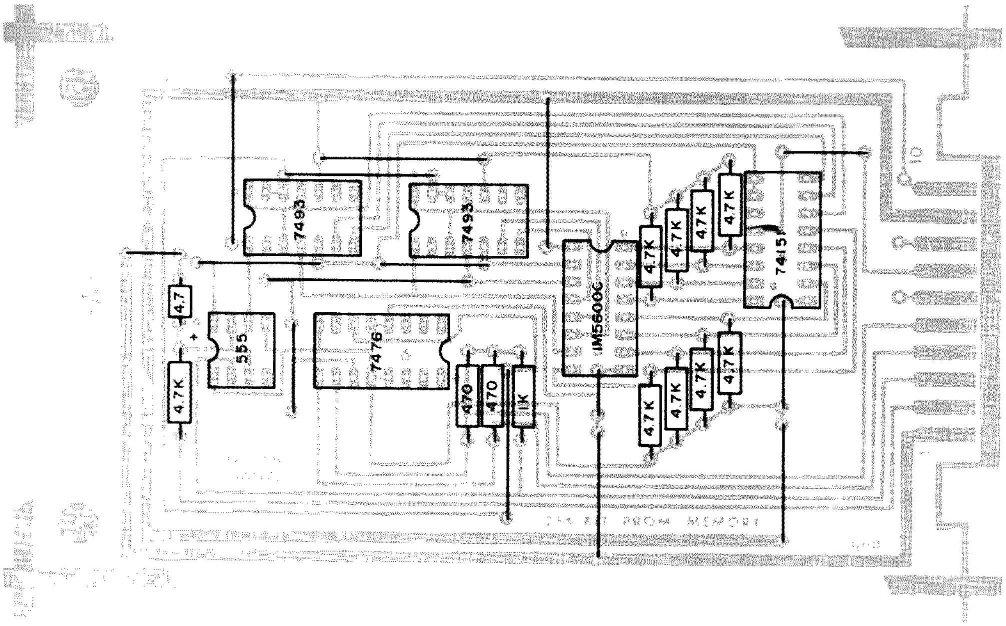

Fig. 8(b). Component layout, 256-bit PROM memory.

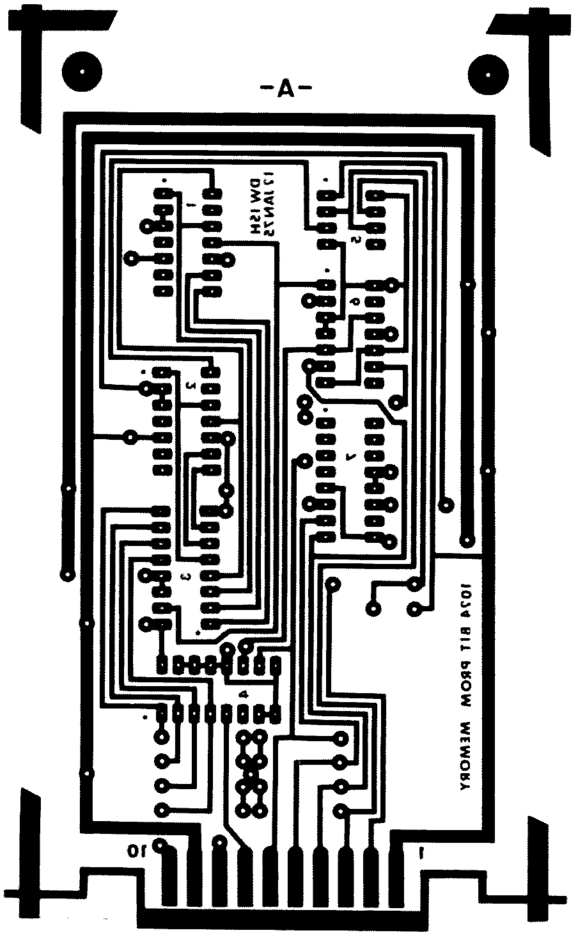

Fig. 9(a). PC board, 1024-bit PROM memory (full size).

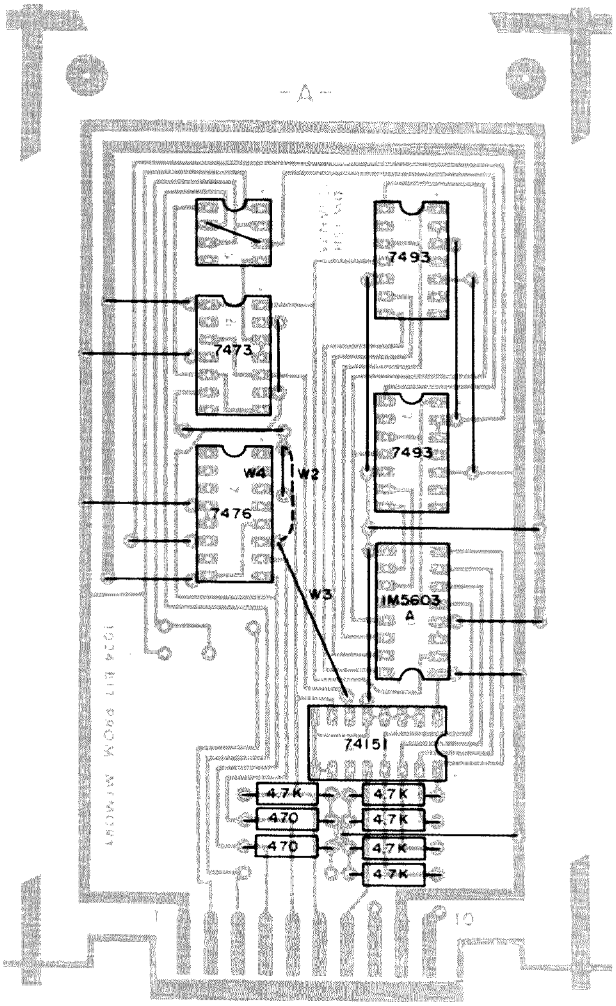

Fig. 9(b). Component layout, 1024-bit PROM memory.

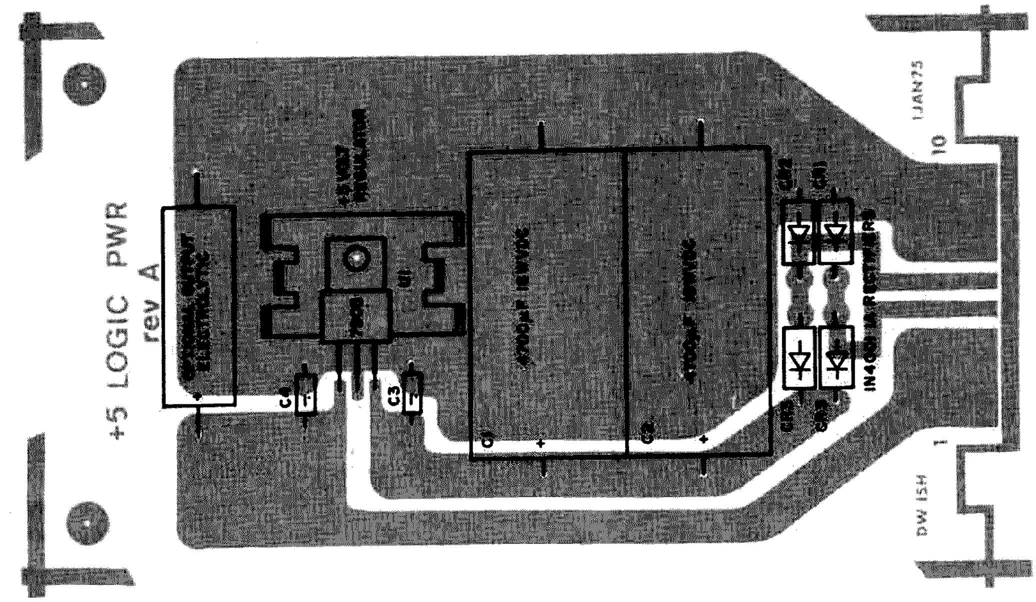

Fig. 10(b). Component layout, +5 volt power supply.

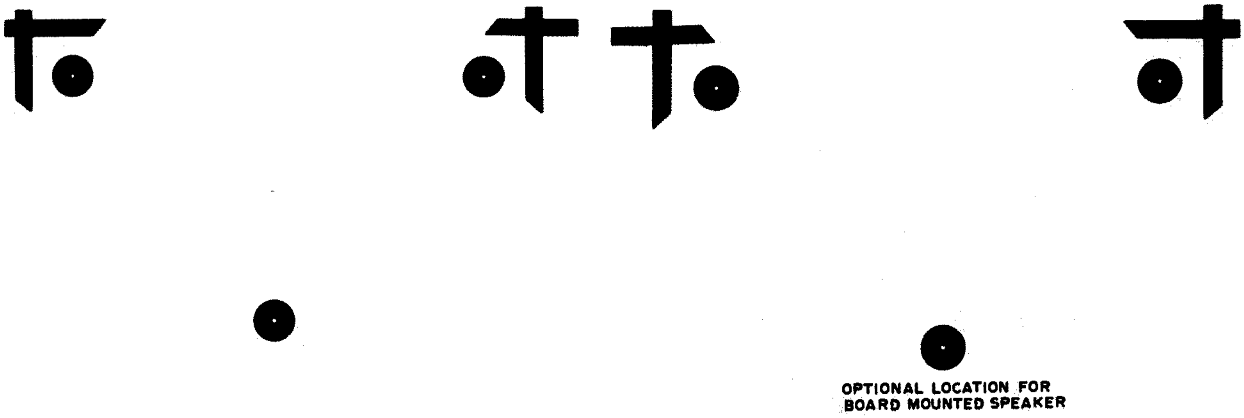

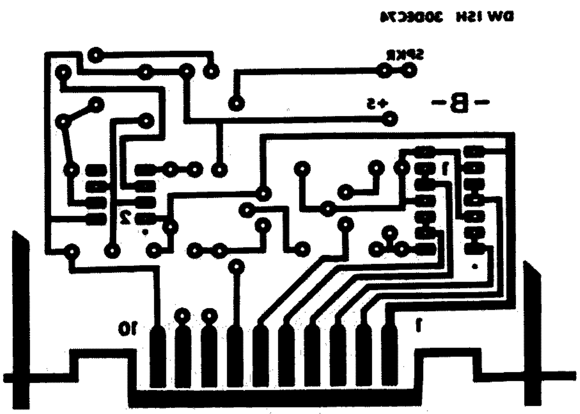

Fig. 11(a). PC board, sidetone/transmitter keying circuitry (full size).

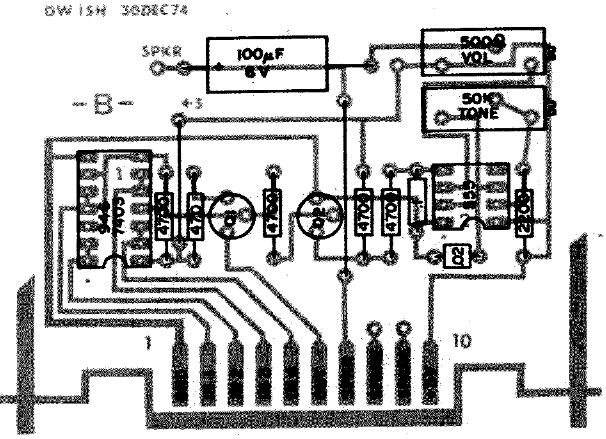

Fig. 11(b). Component layout, sidetone/transmitter keying circuitry.

to date keying a Kenwood TS-511S to 350 Watts (input). Additional bypassing may be required at higher inputs.

Whether the reader chooses RAMs or PROMs for his CW memory, anything which can be sent with a key can be put into memory. Try it, you'll like it. ■

References

[1] D.W. Ishmael WA6VVL, "Building a CW PROM Memory," *73*, May, 1976, pages 102-108.

[2] James Garrett WB4VVF, "The WB4VVF Accu-Keyer," *QST*, August, 1973, pages 19-23.

[3] Signetics, *Digital/Linear/MOS Applications*, "555 Timer," pages 6-78 through 6-90.

[4] "Deluxe All-Solid-State Keyer," *The Radio Amateur's Handbook*, ARRL, pages 362-366, 1974 edition.

[5] Shipley Co. Inc., 2300 Washington St., Newton MA 02162.

Additional References

The Weatherford Universal P/ROM Programming Center, Bulletin W-2123. Weatherford, 6921 San Fernando Rd., Glendale CA 91201.
Intersil IM5600C Data Sheet.
Intersil IM5603A Data Sheet.
Intersil IM5600 Reliability Evaluation Data Sheet.
The TTL Data Book For Design Engineers, Texas Instruments, Inc.

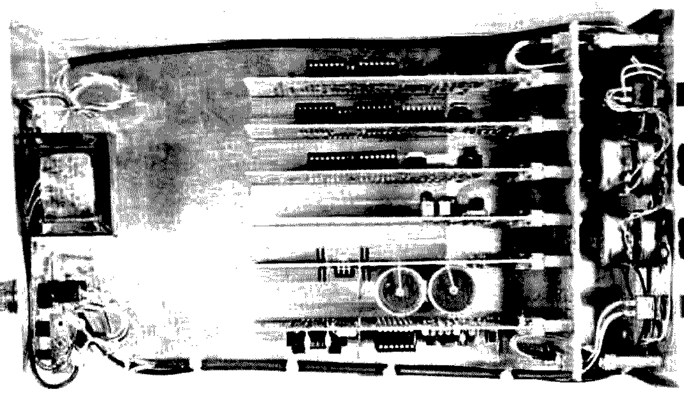

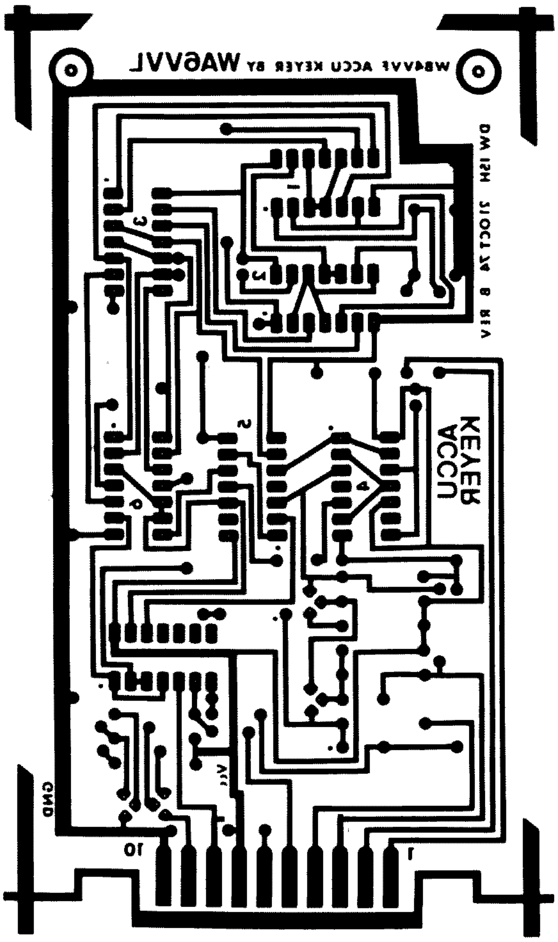

Fig. 12(a). PC board, WB4VVF Accu-keyer (full size).

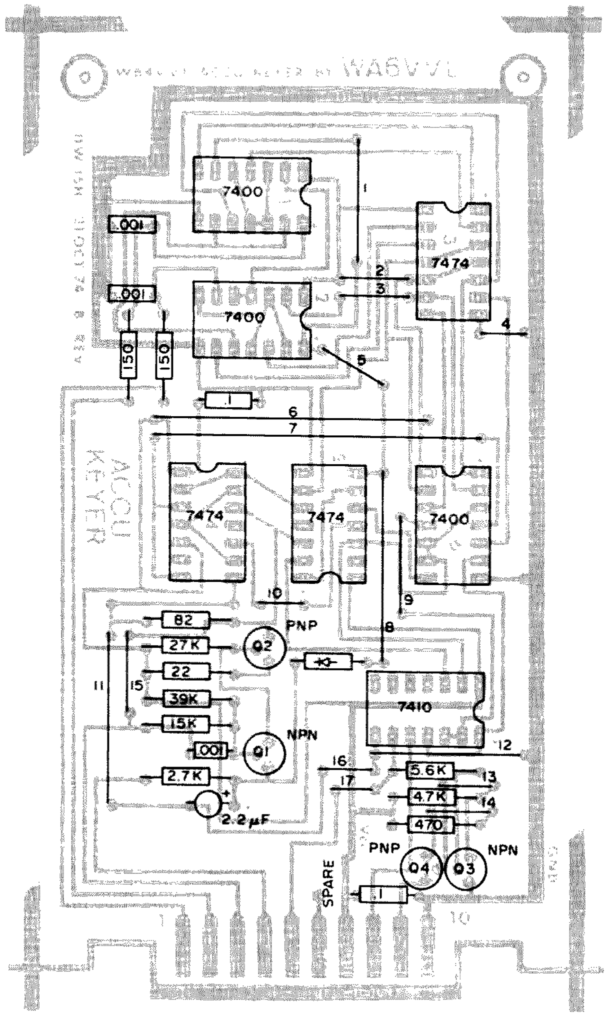

Fig. 12(b). Component layout, WB4VVF Accu-keyer.

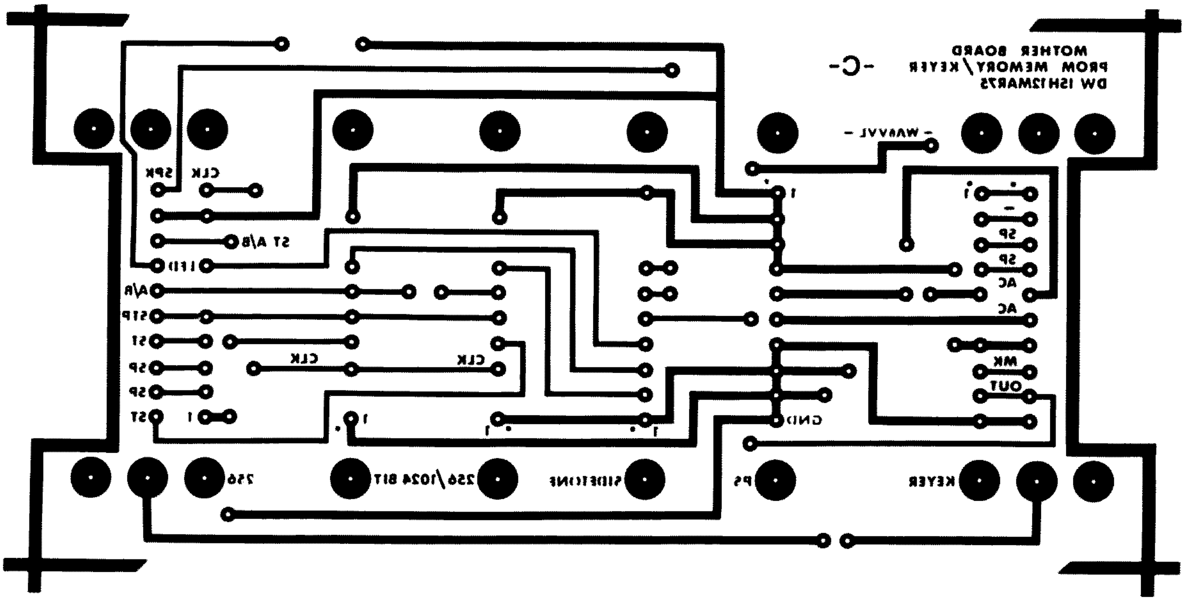

Fig. 14(a). PC board, mother board (full size).

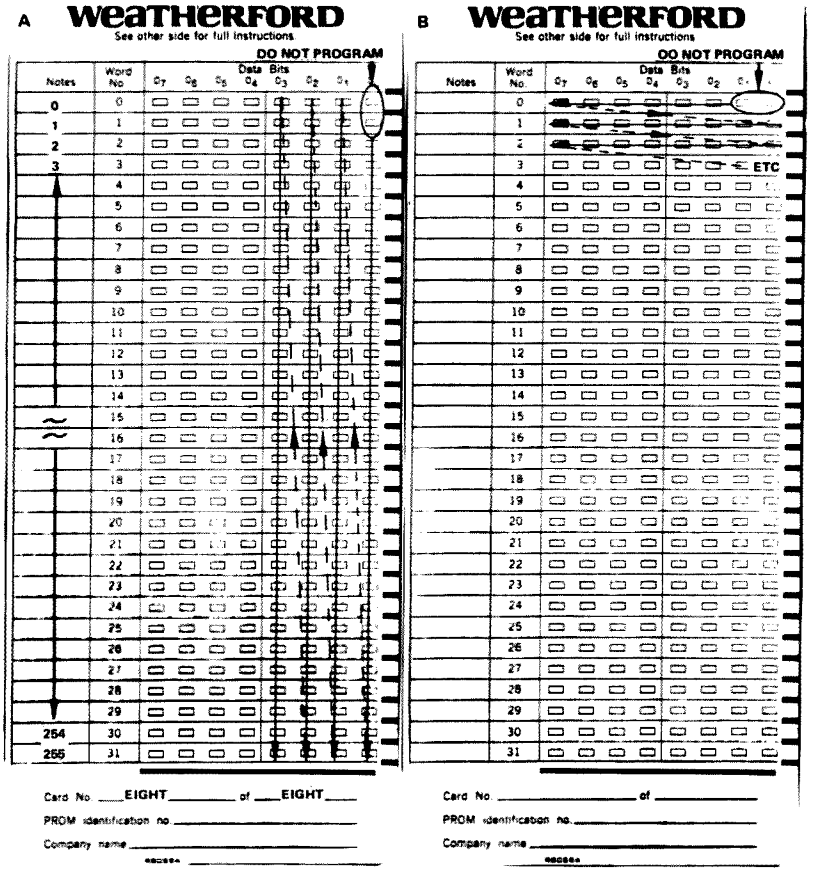

Fig. 13. PROM programming. (a) The data bits are programmed first on 256-bit PROMs right to left, 0_0 through 0_7, followed by 0-31 words, top to bottom. Do not program the first two data bits, but leave at logical 0. One program card is required for 256-bit PROMs. (b) The words, 0 through 255, are programmed first on 1024-bit PROMs, top to bottom, for a total of eight programming cards followed by 0_0 through 0_3 bits. Do not program the first two words, but leave at logical 0.

Fig. 14(b). Component layout, mother board.

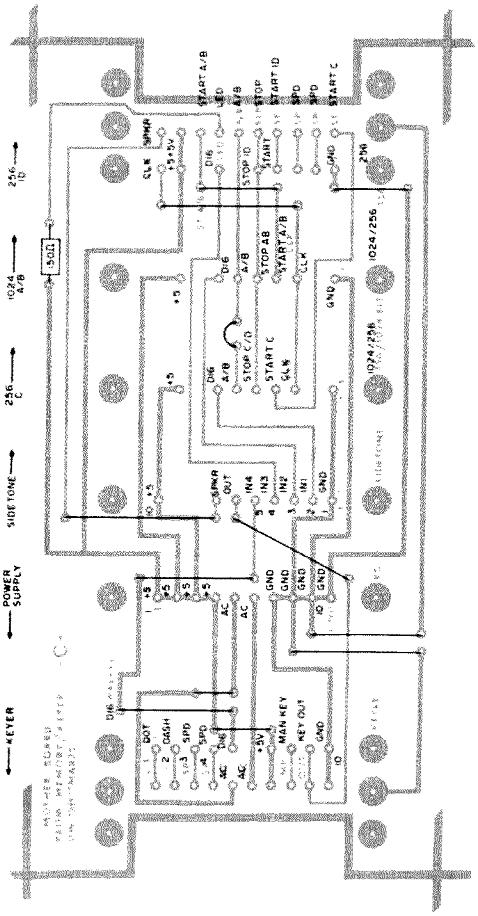

John T. Craig
I/O Editor

What's When

--timing diagrams

A timing diagram is one of several "road maps" for digital circuits. Aside from providing us with a "picture" of what a waveform should look like at the output of a circuit, it can also tell us the exact conditions which exist within a circuit for any particular instant in time. The latter can be very helpful information when troubleshooting a circuit. Being able to generate a timing diagram to the point of determining what the output waveform looks like is a useful tool in analyzing and learning digital circuits.

We're going to be discussing timing diagrams from two different angles. First, we're going to take a look at some of the fundamentals and techniques involved in *generating* a timing diagram. Secondly, we're going to examine a couple of manufacturers' diagrams and discuss the *interpretation* of same.

A Basic Timing Diagram

Fig. 1 illustrates the fundamentals of a simple timing diagram. Perhaps one of the first things worth pointing out is the desirability of using *graph paper*. This will help you establish a time reference (by assigning a time period for each division) and certainly help in keeping events lined up vertically, which is one of the objectives.

The arrow at the bottom of the diagram indicates *time* is going from left to right. It's the only way to go . . . there aren't many things as confusing as trying to use a timing diagram drawn the other way. (Keep in mind that an oscilloscope display is also from left to right with respect to time.)

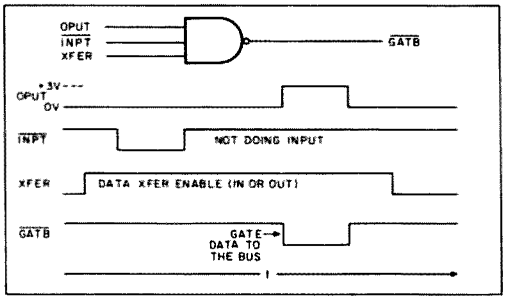

Fig. 1. A simple timing diagram illustrating the output of a 3-input NAND gate.

The diagram illustrates the inputs and outputs of a 3-input NAND gate. Assuming we had the three input signals down on paper our next step would be to generate the output. Remembering the rules for a NAND gate (that is, the output will go low only when all of the inputs are high), we begin examining the input signals from the left. As long as any of the inputs are low, the output will remain high. And, as you can see, the output drops low when all three are high. Signal OPUT ("OUTPUT") is high, indicating an output function is to be performed. $\overline{\text{INPT}}$ ("INPUT" NOT) is high, indicating an input function is not currently being done. And, XFER ("Transfer") goes high to enable the data transfer. The output signal, $\overline{\text{GATB}}$, ("Gate to Bus" NOT) is low when we're gating data to the bus.

One more point before leaving this basic diagram. Notice the comments. Now, it doesn't matter if you put comments with the signal mnemonic or with the waveform, as shown. But, it's a good idea to do it . . . and for a very good reason. This timing diagram is to the hardware man what a program and/or flowchart is to a software man. All of them will be easier to read and understand by others (and yourself, a year from now) if there are comments included. (By the way, the reference to "hardware" and "software" shouldn't imply that this discussion is aimed toward computers. We're dealing with *digital electronics*, and that covers a wide range of equipment and applications.)

Timing Diagram Generation

It was evident from Fig. 1 that we needed to know what the input signals were before we could start. This will, of course, hold true for any timing diagram we wish to generate (i.e., the inputs will be our "known" values, and the other signals – including the output – will be our variables, or "unknowns").

We have three signals coming into the circuit shown in Fig. 2. These are Θ1 (Phase 1), Θ2 (Phase 2), and $\overline{\text{RST}}$ (RESET NOT). As you can see, this circuit has a flip flop, and it is very important that you establish in the beginning the state of that flip flop (either set or reset). Note that $\overline{\text{RST}}$ goes true (low) in the beginning to put the flip flop in a reset condition. (And, as part of the "comments" in this diagram, the arrow illus-

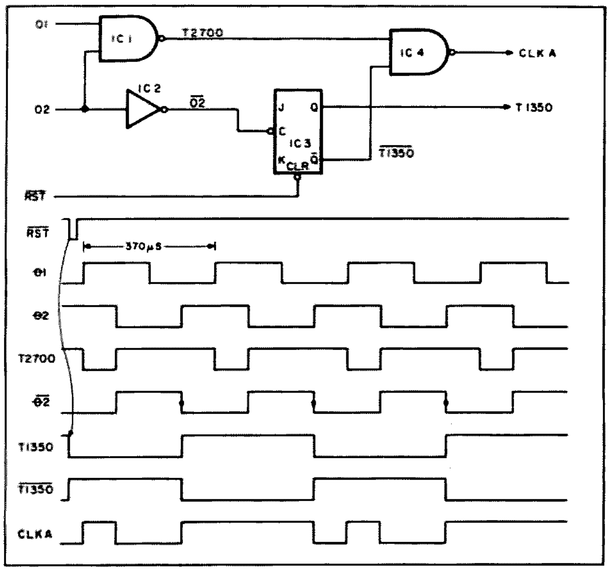

Fig. 2. Generation of a nonsymmetrical clock.

trates this.)

As a suggestion, why don't you take a piece of paper and cover the waveforms below the three inputs, and we'll see if you can anticipate the outputs as we go along (or better yet, draw them on the paper).

Θ1 has a period of 370 microseconds. If you grab your handy-dandy little calculator and take the reciprocal of that, you should come up with a frequency of 2700 Hz. The ANDing of 01 and 02 (through NAND gate IC1) produces the signal T2700. So much for IC1 ... and doing it first was strictly arbitrary. Now, let's take the inversion of 02 (through IC2) and generate the clock for the JK flip flop. On the trailing edge (or "down-clock" or "one-to-zero transition") of $\overline{02}$ the flip flop will change state. It started off in the reset condition (because of $\overline{RST}$) and is clocked set (i.e., Q output high, and $\overline{Q}$ low) on the first trailing edge of $\overline{02}$. And, as you can see, it is toggled (change of state) two more times during the duration of the diagram. The outputs of the flip flop are labeled T1350 and $\overline{T1350}$. The signal names in this case are derived from the frequency of the output, which is 1350 Hz. (The flip flop divided the input frequency of 2700 Hz by two.)

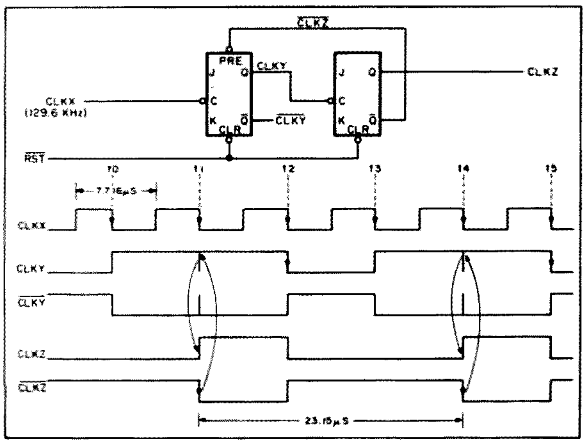

Fig. 3. A divide-by-three circuit.

In order to complete the timing diagram for this circuit, we need to AND together (through NAND gate IC4) the signals T2700 and $\overline{T1350}$. Once again, remembering the rule that the output goes low only when the inputs are both high, we generate the signal CLKA (which is, of course, a nonsymmetrical clock, or signal).

Fig. 3 is an interesting circuit, a divide-by-three. Note that in this case we didn't show the reset signal ($\overline{RST}$) in the timing diagram. Regardless, it's very important that you establish the starting conditions for the flip flops (either set or reset). The labeling of various timing points (t_0, t_1 ... t_5) can be very useful for reference when discussing the diagram. Also notice the "comments," the period of the input waveform (7.716 usec), the period of the output waveform (23.15 usec), and the arrows indicating which transition caused which change of state. The divide-by-three function of the circuit is evident when you see that it took three cycles at the input to develop one full cycle at the output. (If you haven't seen this circuit before, and you find it interesting, it's suggested that you examine it more closely, because it is definitely a tricky little devil!)

Fig. 4 is an "exercise" circuit for those of you who would like to try your hand at generating a diagram from scratch. The "answer" (timing diagram) is shown in Fig. 6. Assume that all three flip flops are in a reset condition initially, and the input frequency of 10.8 kHz is a symmetrical square wave. (NOTE: Have at least ten full cycles of the input signal across the page.)

Interpretation

There are several techniques regarding timing diagrams which haven't been mentioned (but are very common) and will help you in interpreting others. For example, we've been using the bar (or vinculum) over the signal mnemonic to indicate the not term (e.g., $\overline{INPT}$ = "INPUT NOT"). There are several methods in use today for representing the true and false terms in signal notation. Most of them are listed in Table 1.

Fig. 5 illustrates several techniques used to indicate various conditions or states. The first line (DAL 0-7) represents the data and address lines of an eight bit computer. The crossing over of the lines simply indicates that the data and address will be either ones or zeros. This is especially true for multiple lines (as per the example) but can also be used for a single line. The signal called SYNC in the second example is depicted with a broken line, which means that the signal may or may not occur at that particular point. The third line (ADDR) illustrates the "settling time" for a signal. (Settling time is the time it takes for a signal to become stable after being applied to a line or bus.) This is of primary concern when the signal is initially applied to a

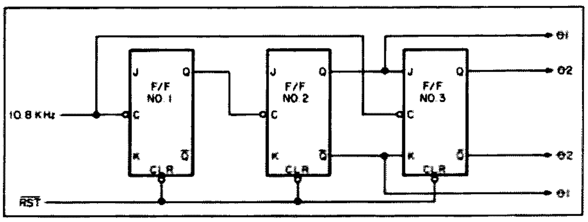

Fig. 4. Exercise circuit.

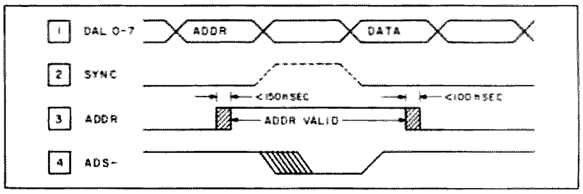

Fig. 5. Some miscellaneous techniques.

line, and therefore the fourth line illustrates another method of showing this, but only at the beginning of the signal.

Summary

Timing diagrams are just one of several useful tools for evaluating, designing, and analyzing logic circuits. It's like anything else ... the more you use it, the better tool it becomes.

If you've been waiting for the punch line regarding "the illogical characteristics of logic circuits," I'm afraid there really isn't one. But, there are times during the course of troubleshooting a digital monster that I (and others) have been known to throw up their hands and scream, "Is there really anything *logical* about this mess!??" Usually, after sitting down and analyzing the "mess" (with a timing diagram, or other means), we find that there is. ■

High True Condition	Low True Condition
STRB+	STRB-
STEP	$\overline{\text{STEP}}$
EADR	NEADR
CRST	CRST'
INTF	INTF L
INIT	*INIT

Table 1. Examples of signal notation.

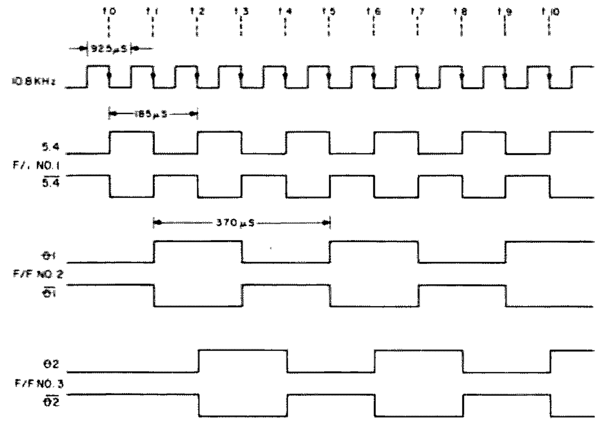

Fig. 6. Timing diagram for exercise circuit. Hopefully your diagram came out the same as the one shown here. Let's discuss it briefly. Flip flop #1 divided the input frequency by two, and we came up with 5.4 kHz. Flip flop #2 divided the 5.4 kHz by two and we now have a frequency of 2700 Hz. In order to make this circuit work you must take the input conditions to flip flop #3 prior to the trailing edge of the t_1 clock pulse (i.e., a low should have been clocked to the "Q" output, as shown here). The high output (Θ1) from flip flop #2 won't be clocked into flip flop #3 until clock t_2. This circuit has generated a frequency of 2700 Hz at four different phases. Consider signal "Θ1" as 0° Phase, and "$\overline{Θ1}$" will be the 180° Phase. "Θ2" is 90° removed from 0° Phase (and is therefore the 90° Phase). Signal "$\overline{Θ2}$" is 180° removed from 90°, and must therefore be the 270° Phase.

Robert A. Johnson
5707 - 101A Ave.
Edmonton, Alberta
Canada T6A 0L9

Eight Trace Scope Adapter

--test accessory for digital timing

Probably the most frustrating problem faced when designing digital circuitry is control of timing. After working out a design on paper, one usually breadboards the circuit to prove it out. In accordance with Murphy's well-known laws, there will be several logic errors which will then be apparent but very elusive. Depending upon the complexity of the design, the errors may be (but usually are not) easily located and corrected.

A number of tools are helpful in tracking down these problems – the logic probe and oscilloscope probably being the most helpful. A logic probe establishes the steady-state status of various points in the circuit, but tells nothing about pulse widths or repetition rates. The oscilloscope is used to visually illustrate these waveshapes, pulse widths, and repetition rates. What most scopes do not show is the time relationship between pulses at different locations in the circuit. Sometimes this relationship is crucial in searching out a problem that may be caused by "glitches" (extremely short pulses caused by unexpected and unwanted time overlaps). Well-equipped laboratories use special multi-channel logic scopes for this sort of work, but most of us are not equipped with the kilobuck pocketbook required to manage this. Even a dual channel high speed scope requires a considerable investment.

While such a scope would be most welcome in any experimenter's laboratory, most of us must settle for a relatively inexpensive general purpose scope. Fortunately, it is neither difficult nor expensive to build an adapter to display multi-channel logic signals. The adapter permits viewing up to 8 channels of logic signals simultaneously, and thereby examination of the relative timing between them. Although analog waveshapes cannot be displayed (you can use your scope without the adapter for this function), it will show the low or high states, in precise time positions, of any signals present in TTL or DTL circuits.

Almost any general purpose scope should work with this adapter, but it is recommended that it be equipped with a triggered sweep. The viewing of simple repetitive signals without a triggered sweep can be frustrating enough, but attempting to lock onto one of eight channels being displayed may be virtually impossible. If you are using a scope without this feature, I highly recommend that you consider adding a new triggered sweep, even if you do not build this adapter. The attractive scope described by WØACR in *73* (November/December, 1975) includes such a circuit, which could be easily added to any

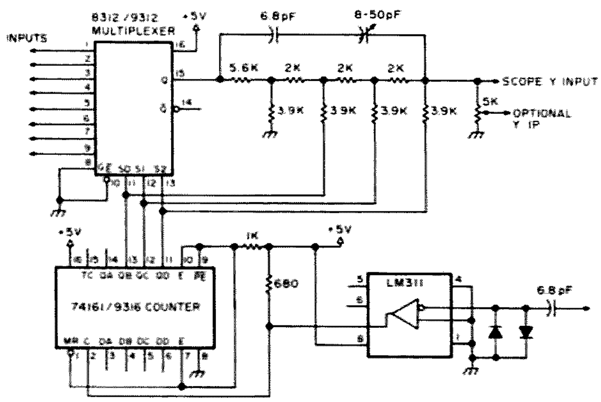

Fig. 1. Schematic.

scope. *Radio Electronics* for February, 1975 (p. 143), has another simple 2 IC sweep circuit. Scope bandwidth is not critical unless you are working with really high speed stuff, and a 4 MHz bandwidth will let you examine almost all you need to see. You must have a way to externally trigger the scope sweep, and you will have to find the sweep signal or blanking pulse to permit changing the input channels during the retrace interval.

The circuit itself is very simple: A small capacitor couples the scope sweep circuit to a voltage comparator (you may find it necessary to adjust the size of the capacitor for reliable trace switching). The sweep retrace causes a negative excursion at pin 3 of the LM311, forcing its output to go high. Each time this occurs, a 16 stage counter advances one count. Three output bits of the counter are connected to an eight-to-one 9312 multiplexer, which selects each input in turn, and outputs to pin 15. If most of your work is at the lower frequencies, use the low order 3 bits of the counter, instead of the 3 high order bits shown. When using the 3 high order bits, you may use the adapter with a dual channel scope operating in the "alternate" mode.

A ladder network commonly used for digital to analog conversion is used to position each channel on the screen. The resistors should be well matched (i.e., 1%), but satisfactory results have been experienced with 5% units. If your display is not evenly spaced vertically, try swapping resistors in this network for best spacing. The variable capacitor is used to compensate for the scope input capacitance, and should be adjusted for best waveshapes. The output potentiometer will not be required in most instances, and should not be used unless essential.

Fig. 2(a). PC board (full size).

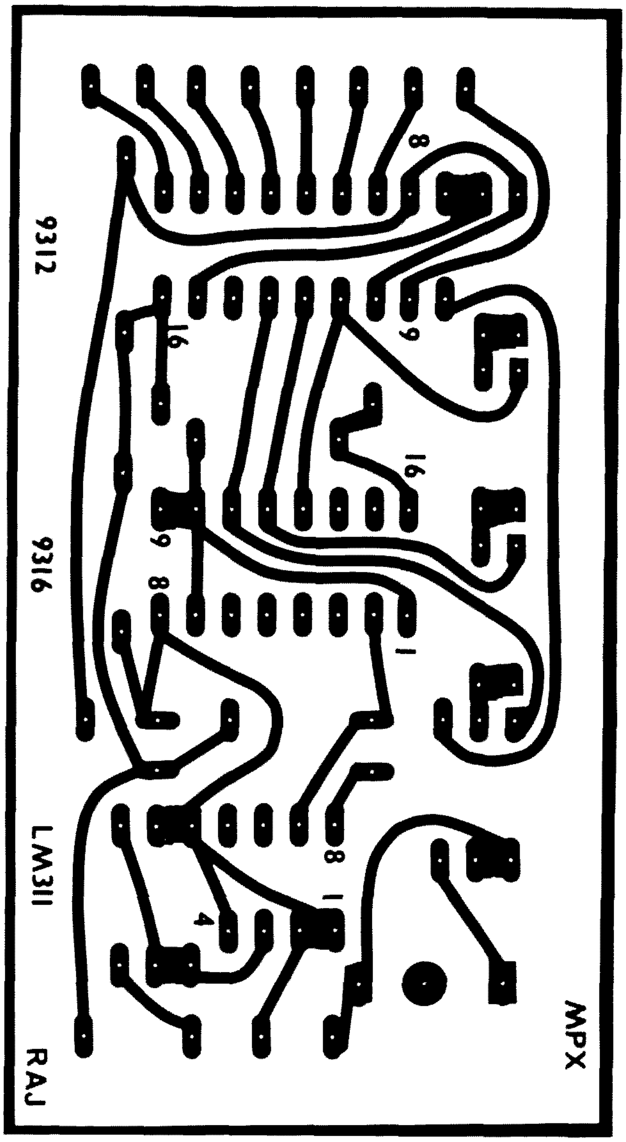

Note that a 74161 or 9316 synchronous counter is recommended, rather than a 7493 or similar asynchronous type. It is unlikely that propagation delays in an asynchronous counter would result in viewable glitches on the scope in this application, but it is good design practice to always use a synchronous counter where the output states are decoded and fed back to the counter.

The adapter may be built on a small printed circuit board (note the IC polarity!) and installed inside your scope. However, it may be very conveniently enclosed in a small box which can be located near and powered from the digital project, and coupled to the scope via cables. You will need the usual vertical input cable and a sweep-out signal. Many scopes have an "Ext" jack for horizontal input, which is permanently connected to the input of the horizontal amplifier. When the sweep is running, this also happens to be the output of the sweep generator!

Should you experience difficulty in obtaining a stable trace, the sweep circuit may not be advancing the counter properly. Try a

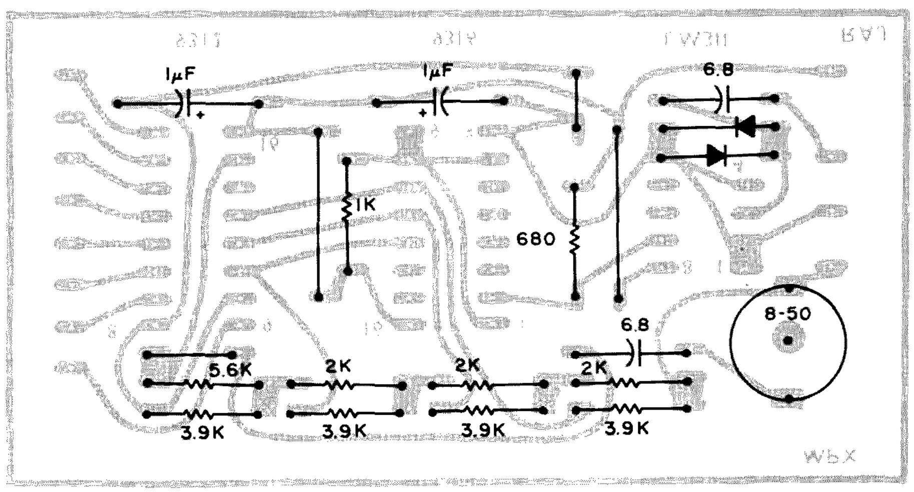

Fig. 2(b). Component layout.

different spot in the sweep circuit first. You may find it necessary to invert the signal by using pin 2 of the LM311 (grounding pin 3) if the signal is reversed in polarity. The 74161 counts on a rising edge, and reverse polarity will cause the channel change to occur in mid-sweep, with obvious visible distortion. You may find experimenting with the size of the sweep input capacitor to be helpful, but be careful to avoid distorting the sweep. The scope will not be as bright as usual, as the trace is being time-shared among 8 signals. A slight adjustment of the brightness control compensates for this. The variable capacitor is adjusted for best waveform using a 10 kHz or higher digital pulse. A 74151 multiplexer is functionally identical, but not pin compatible, with the 9312 unit. The LM311 comes in either a mini-dip or TO-5 package. As the pin-outs are identical, either may be used with the circuit board shown.

Using your multi-trace scope is a delightful experience: You see all of those signals at the same time, and can really tell what is going on. Remember that you must trigger the sweep from the slowest signal you are viewing; otherwise, you will not be able to sync the slower signals. Also, be aware that the inputs are not protected in any way, and connection to potentials outside of the proper logic levels will destroy the multiplexer IC. Protective diodes may be added on the input lines to give marginal security, but care, plus a socket for the 9312, are probably adequate.

The small investment required to construct this unit will be quickly repaid the first time you use it to track down a problem.

Happy hunting! ■

The PROM Zapper

--build this simple PROM programmer

Geoffry W. Kufchak WA1UFE
15 Fourth Ave.
Westover AFB MA 01022

Quite a few articles have been published recently in *73* and other magazines wherein a PROM has been required. Usually a schematic like the one in this article is supplied along with instructions for programming, but not the construction of the programmer. This is the one I built for programming the 8223 PROM used in my CW ID. (See *73*, July 1976, page 58.) The 8223 PROM is a 32 word by 8 bit memory element. It is similar to the circuit in the Signetics *Bipolar Memories* book, but I added a built-in 5 volt regulator and a low current LED to verify the output programming. The switches are also somewhat different. The only power needed is a regulated 12.5 volt supply or auto battery.

Construction

The programmer is built in a 4" x 6" x 2" aluminum chassis. A parts layout is given, but may be altered to suit your own taste, depending on the enclosure used. All wiring is point-to-point, with only one PC board used. The PC board has a socket for the 8223 and also provides solder pads for wiring.

First, lay out the top panel. Then drill the holes for the switches and LM309K. Drill two 7/16" holes and file to a rectangular shape for the IC socket to fit snug. Using the PC board as a template, mark and drill the two mounting holes. Drill a hole somewhere on the panel for the LED and two holes on a side panel for the power connections. Deburr all holes and cutouts. Apply lettering if desired.

Mount all the parts on the chassis with appropriate hardware, using insulated washers where necessary. A few ground lugs will also help. Install the resistors, capacitors and LED first, then wire the output selector switch, using color-coded wire to avoid confusion. Then wire the address and program switches, the Vcc and ground lines.

Operation

Recheck all your wiring and then program according to the following instructions:

1. Connect programmer to a regulated 12.5 volt source.

2. Set the PROGRAM-VERIFY switch to OFF.

3. Insert the 8223 to be programmed in the socket, paying attention to the location of pin 1.

4. Set the ADDRESS switches to the proper word to be programmed.

5. Set the OUTPUT switch to the output to be programmed for the corresponding word.

6. Set the PROGRAM-VERIFY switch to PROGRAM.

7. Momentarily depress the PUSH-TO-PROGRAM switch to program a logic 1. (Do not exceed 1 second.)

8. Set the PROGRAM-VERIFY switch to VERIFY. The LED will light indicating a logic 1 has been programmed. Set switch to OFF.

9. Repeat steps 4 through 8 to program the rest of the chip.

Only logic 1s need be programmed as the chip comes with all outputs at a logic 0. Also, by using the VERIFY position, pre-programmed chips may be tested and a truth table made up. ■

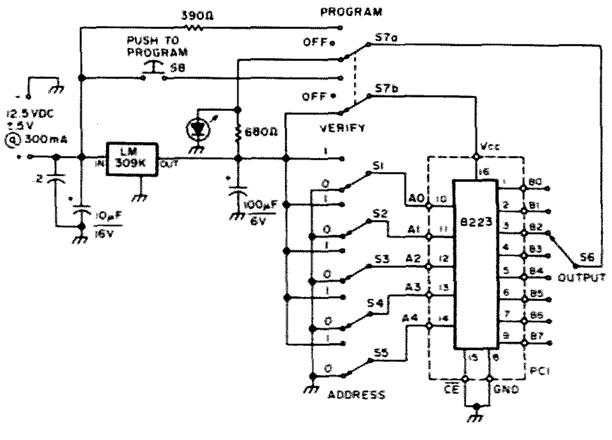

Fig. 1. 8223 PROM programmer schematic diagram.

Parts List

(Most parts available at Radio Shack)

1	LM309K
1	390 Ohm ½ W
1	680 Ohm ½ W
1	LED
1	.2 uF disc
1	10 uF 16 V
1	100 uF 6 V
1	Chassis RS#270-245
2	Banana jacks
1	16 pin DIP socket
PC1	Printed Circuit-RS#276-024
S1-S5	SPDT RS#275-326
S6	8-position rotary or thumbwheel
S7	DPDT Neutral Center RS#275-1545
S8	SPST Momentary Contact push-button

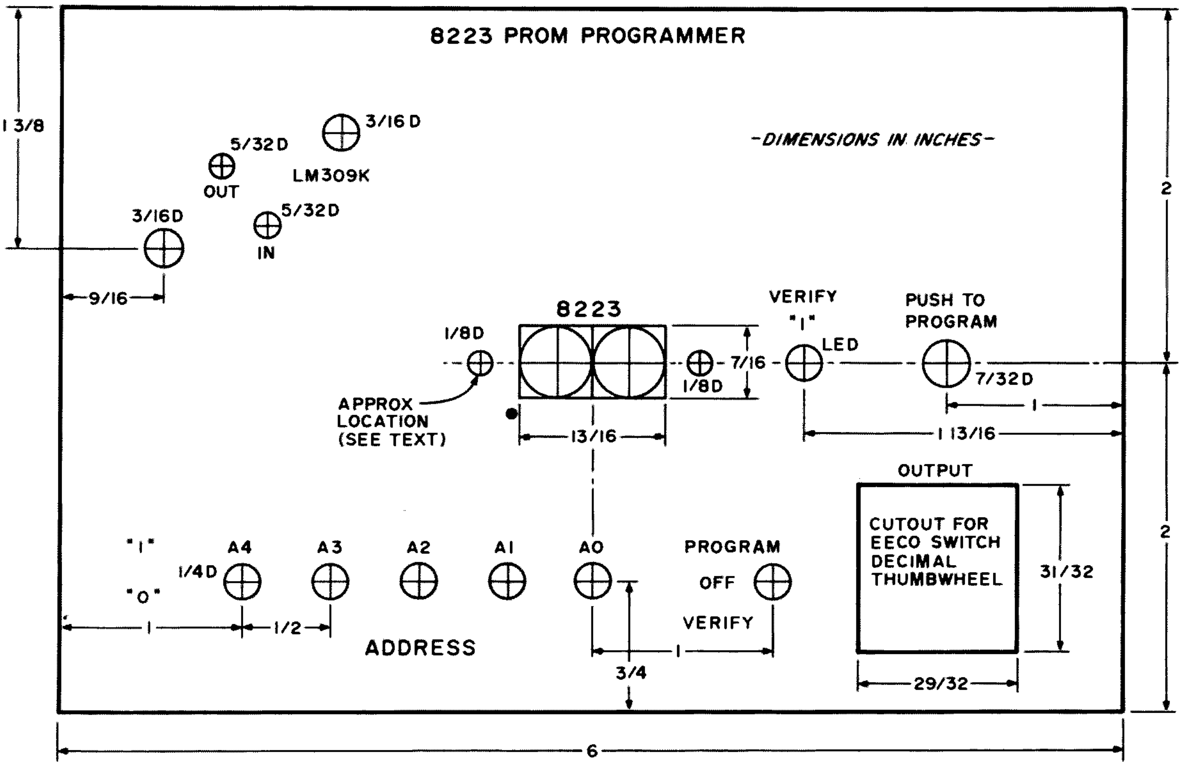

Fig. 2. Parts layout of top panel (full size) with suggested labeling. Hole for LED should ensure tight press-fit.

THE Z-80 REVOLUTION

TDL IS PROUD TO ANNOUNCE THE REVOLUTIONARY Z-80 CPU CARD, AN ALTAIR/IMSAI COMPATIBLE CPU CARD FEATURING THE POWERFUL Z-80 uP PRODUCED BY ZILOG INCORPORATED. WHAT'S SO REVOLUTIONARY ABOUT THE Z-80? A LOOK AT THE FOLLOWING COMPARISONS WILL SHOW YOU:

As you can see, the Z-80 is a very powerful and fast uP - in fact its a NEXT generation microprocessor. And its available to you in a totally compatible format, NOW. Just unplug your current CPU card, plug in the Z-80 CPU, load a program, and you're up and running - with a NEXT generation uP. The power and versatility of the Z-80 is unequalled in the uP field, and it opens the door to tremendous developments in the state of the art. More powerful, faster, and less memory consuming versions of your current 8080 software are just a part of the possibilities the Z-80 provides. (TDL's own 8-K BASIC for the Z-80 will be available in September.)

Each Z-80 CPU kit comes complete with:

- Prime commercial quality boards, IC sockets etc.
- easy to follow instructions
- Zilog's Z-80 Manual
- Schematics
- An easy to understand and apply user's guide
- TDL's Z-MONITOR on paper tape (soon to be available in deluxe PROM version)
- And membership in the Z-80 user's group.

Move up to the Z-80. Only $269.

Comparison of the Zilog Z-80, Intel 8080, and Motorola 6800CPU chips

	Z80	*8080*	*6800*
NUMBER OF:			
Instructions	158*	78	72
Internal Registers	17	7	6
Addressing Modes	10	7	8
Voltage Required	+5	+5,-5,+12	+5
Standard Clock Rate	DC-3MHz	0.5-2MHz	0.1-1MHz
Clock Phases	1	2	2
Clock Voltage	4.2	8.4	4.8
DynamicRAM refresh and timing signals without slowing down CPU or requiring additional circuitry	Yes	No	No
Single instruction memory to memory and memory to I/O BLOCK TRANSFERS	Yes	No	No
Single instruction SET, RESET, or TEST *of any bit in accumulator, any general purpose register, or any external memory location*	Yes	No	No
Single instruction BLOCK SEARCH of any desired length of external memory for any 8-bit character	Yes	No	No
Non-Maskable Interrupt and TTL compatible inputs	Yes	No	Yes
Internal sync of inputs and direct strobe of outputs	Yes	No	No

* Includes all 78 machine code instructions of the 8080A and is therefore capable of running any standard 8080A software without modification.

ADDITIONAL FEATURES OF THE Z-80:

- Up to 500% more throughput than the 8080A
- Requires 25% to 50% less memory space than the 8080A CPU
- Three modes of fast interrupt response plus a non-maskable interrupt
- Outperforms any other microcomputer in 4-, 8-, 16-bit applications

THE FASTEST RAM? The high speed capability of the Z-80 demands an extra-fast RAM to back it up, and TDL's new Z8K RAM board fills the bill. The Z8K is an 8K by 8 static RAM with the fastest access time in personal computing - 215ns. Its the only RAM in personal computing fast enough to let the Z-80 run at full speed with no wait states. If that isn't enough, it also happens to be one of the lowest powered RAMs around as well. Only 150 ma typical current load on the 5V supply. That makes the Z8K run cool -and perfect for battery standby operation as well. Other so-called "low power" 4K RAM boards can't compete with these specs. Its the perfect match for the Z-80, and its features and low cost make it a perfect match for ANY uP. (It's fully Altair bus compatible of course...) Price: Only $295

WHAT ABOUT QUALITY? All TDL products share one thing in common - exceptionally high quality. The quality starts with engineering that is dedicated to keep your system state of the art at the lowest possible cost. Consider also the "Qual Division" whose ONLY purpose is to keep TDL's products the best in the industry. And our products use only the finest boards available, prime components, sockets for all ICs, gold plated edge contacts and other earmarks of a commercial grade product. And its backed by a solid 90 day guarantee on parts and materials.

SAVE MONEY NOW Order both a Z-80 CPU card, and one or more Z8K RAM boards before September 1st, 1976, and you can deduct 10% on the total cost. Act now while this special offer lasts. (Does not apply to COD orders.)

HOW TO ORDER Just send check or money order, or use your BankAmericard or Mastercharge, and your orders will be shipped to you postpaid within 30 days. COD orders must be accompanied by a 25% deposit. Your credit card order must include the serial # of the card, expiration date, and your order must be signed. New Jersey residents add 5% state sales tax. For more information, send for our free catalog.

Dealer Inquiries Invited

TDL

(609) 392-7070

TECHNICAL DESIGN LABS INC.
342 COLUMBUS AVENUE
TRENTON, NEW JERSEY 08629

Allan S. Joffe W3KBM
1005 Twining Road
Dresher PA 19025

Sneaky Baudot

--with an ASCII keyboard!

Character or Function	ASCII character to match Baudot code
A	C or #
B	Y or 9
C	N or period
D	I or)
E	A or !
F	M or carriage return
G	Z or :
H	T or 4
I	& or F
J	K or +
K	Letter O or /
L	R or 2
M	\ or <
N	L or ,
O	X or 8
P	6 or V
Q	W or 7
R	J or line feed
S	E or %
T	P or Zero
U	G or ' or Bell
V	Λ or >
W	S or 3
X	= or]
Y	U or 5
Z	Q or 1
CR	H or (
LF	B or "
Letters	- or ?
Figures	; or [
Space	D or $

Table 1. ASCII keyboard characters which will produce corresponding Baudot characters. Only bits one through five of the ASCII character are used.

Here are some apparently unrelated items to fit together.

1. From what I have heard and copied RTTY-wise, most of us hams are not the world's greatest typists; hunt and peck sounds like the order of the day.

2. The April '76 issue of *73 Magazine* has a great idea article on a RTTY generator by WA6JMM.

3. There are lots of keyboards around but they mostly spit out their dope in ASCII whilst we ply our trade with Baudot.

4. There are splendid circuits for getting Baudot from an ASCII keyboard, but they tend to be exotic and mildly expensive.

If we are willing to compromise our aesthetic sensibilities just a smidgin, accept hunt and peck as a legitimate life style, we can take the ASCII keyboard, rearrange the key caps a bit, throw away bits 6 and 7 of the ASCII code, and feed the result into the versatile TTY generator of WA6JMM.

The accompanying table shows the cross referencing of Baudot to the first five bits of the ASCII code. Naturally you will have a lot of keys on the standard ASCII keyboard that you will have no use for as the entire Baudot budget uses but 31 keys. Notice that at least two of the ASCII keys will produce the same Baudot code group character, which gives you some choice as to how to lay out your revised keyboard. ■

C. L. Robertson K1MRK
6 King Richard Drive
Londonderry NH 03053

Steve Ciarcia
124 Hebron Ave.
Glastonbury CT 06033

Simple Graphics Terminal

--using inexpensive surplus equipment

Several designs have been presented in the past that would, in one way or another, allow the display of graphical data on a CRT. Although these several approaches will accomplish the stated objective, each has the shortcomings of requiring the builder to fend for himself when it comes to the actual output device to be used. The graphics display described in this article takes advantage of a group of ready-made subassemblies, which when interconnected and properly interfaced with the graphics driver portion of this project, will result in a first class graphics display with capabilities far in excess of those attainable with a simple oscilloscope adaptation or a raster-scan television readout device.

To illustrate that point, consider the following. The raster-scan home television type display, such as that used in several popular alphanumeric displays, can be used. But, the display is overly complicated and will appear as a connection of blocks rather than as pure line segments. Consequently, since graphics display implies a random display, a single memory cell is required for every defined location on the screen, with the block size determining the maximum number of locations and hence, the resolution. The finer the detail required, the smaller the blocks and the more memory cells required. If the complete screen is to have 256 elements or blocks, these individual units could be defined by four bit X and Y addresses and 32 bytes of 8 bit memory. The resolution in a display with these few points would be terrible.

An 8 bit microprocessor works best with multiples of 8 bits. If we, therefore, made a display incorporating an 8 bit X address and an 8 bit Y address, it would fit nicely and be easy to work with. This display would be of fairly high resolution since it now has 65,000 discrete locations. The only complication is that it will require 8K bytes of memory to store, regardless of the picture being displayed. This will always be the case in any digital storage system. The computer must account for every dot on the screen (65K) and, depending on whether there is a one or a zero stored in the memory location defining that spot, it will make it either black or white. Additional information is

required if gray tones are involved.

A much better system is one which incorporates this same high resolution but does not have to provide storage for anything other than the actual displayed points. The one described here is just such a system.

What Is Graphics Display?

Everybody knows what a graphics display is, right? We all know that a graphics display will allow us to observe phenomona in that familiar Etch-A-Sketch format drilled into us since kindergarten days. Using appropriate input signal conditioning, a graphics display can be just about anything we want it to be . . . from a simple tic-tac-toe pattern to a very complex schematic or logic diagram. We can even play games such as Space War and tennis, display a graph of the current stock market trends, plot temperature and humidity, and on and on.

That's terrific. Everyone should have one, you say? Agreed. The following paragraphs will describe, in sufficient detail, a method whereby the average experimenter can acquire all of the parts and subassemblies needed to construct just such a device. Basically, this graphics display consists of a group of ready-made subassemblies which, when modified per the instructions contained herein, will result in a very high performance X-Y display. The readout device is a 12" diagonal TV-like CRT with a very bright green-blue trace. This CRT has a medium persistence, which is desirable in the interests of flicker reduction. Additional electronics are described to transform the output instructions from any microprocessor into the analog voltages and positioning signals used to actually produce the various line segments that will make up the desired display of information.

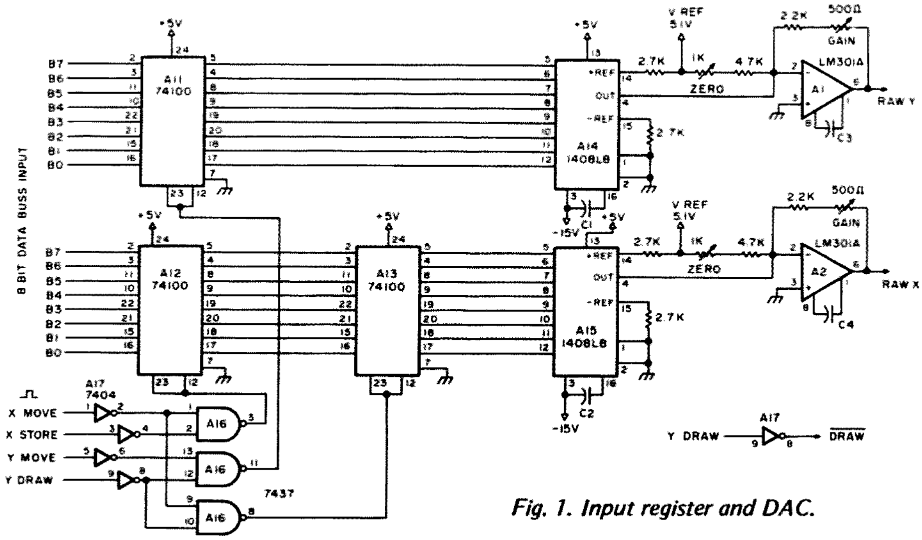

Fig. 1. Input register and DAC.

It should be noted that this article and the graphics display described are the result of the joint efforts of the authors to pull together the many bits and pieces of pertinent information and ideas which abound in the field today. We've drawn on ideas, and in some cases used portions, of previously described circuits to arrive at the final configuration presented here. Our only claim to originality is that we have integrated these various data into a workable, practicable and AVAILABLE piece of equipment intended to do a specific task well, but also have a degree of expandability for new techniques of the future.

So much for the commercial. Now it's time to get on with the description of the project. We'll start with the basic CRT display, since that is the easiest portion. What could be easier than simply sending off an order for a couple of boxes full of already constructed gear and waiting patiently for the order to arrive? Well, there's a wee bit more to it than that, but not much. Suntronix Company (Londonderry, N.H. and Lawrence, Mass.) is once again selling a package of electronic subassemblies that include all of the basic electronic items needed to construct the X-Y display portion of this project. These subassemblies include all of the power supplies, both high and low voltage, the vertical and horizontal deflection amplifiers, a special yoke for the magnetically deflected 12" CRT, four PC cards, a chassis and base to hold these subassemblies and a neat enclosure to hide all of the above. Also included in the package price is a keyboard, ASCII encoded, with an enclosure that fits nicely with the rest of the equipment. Complete data in the form of schematic diagrams for each subassembly is included. As received from Suntronix, these subassemblies will interconnect without major modification to provide the basic X-Y display. So, first thing to do is fire off an order to Suntronix for the complete package of subassemblies.

Now the hard part. You must decide whether you want to build the CRT driver from scratch or order one from Suntronix. Whichever route you choose, you should read the following technical description anyhow, so put off the hard part (the decision-making) and continue to read.

CRT Graphics Driver

The graphics driver is the interface between the actual display and the microprocessor. It translates the binary coded coordinates presented to it through software routines to analog voltages which position the CRT beam appropriately. This driver is a fairly simple system designed to draw line segments with a very high degree of resolution, yet requires only beginning and ending cartesian coordinates to define that line segment. For example, a line running diagonally across the CRT screen from upper left to lower right (-X, +Y to +X, -Y) requires only four eight bit bytes to define the line. Beam position is proportional to the analog voltages applied to the inputs of the deflection amplifiers. The digital to analog converters (DACs) in the graphics driver convert the eight bit coordinates to the analog voltages they represent. Continuous scanning of a series of these values connects many individual line segments to produce the desired figures or pictures or whatever. Additional circuitry is included to assure a relatively uniform beam intensity regardless of where the beam is commanded to go. Also, blanking of unwanted beam

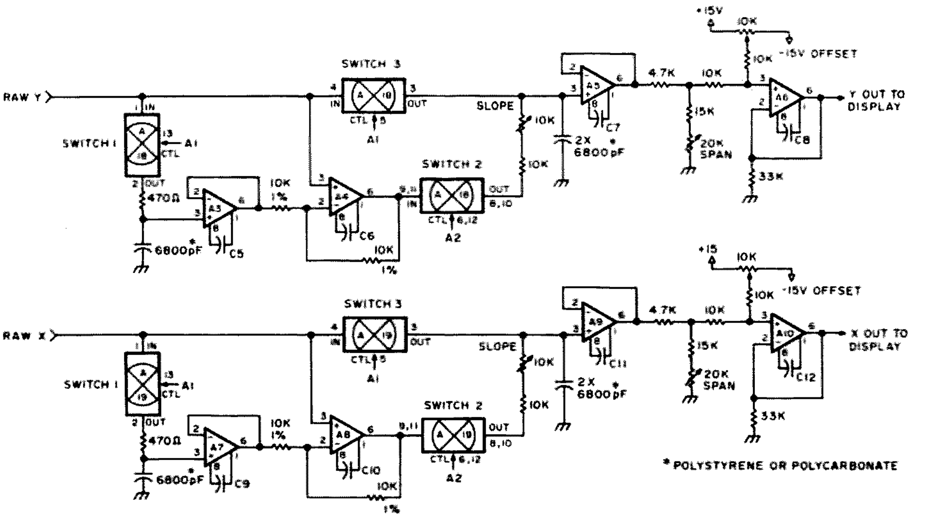

Fig. 2. Vector generator. Note: A1-A10 – pin 7 to +5 V, pin 4 to -15 V; A16-A17, A21, A22 – pin 14 to +5 V, pin 7 to ground; A20 – pin 16 to +5 V, pin 8 to ground.

movements is included.

Input Registers and DACs

The graphics driver has been designed to be driven by any eight bit microprocessor such as the 8008, 8008-1. It is compatible with any faster eight bit machine so long as the software scanning routines do not exceed the processing and analog conversion time of the driver. Though somewhat modified, this circuit is based upon a similar design by Hal Chamberlin and presented in the first three issues of *TCH*. Basically, the design is a software graphics driver. Computer instructions are used to output the binary position coordinates to the driver eight bits at a time; first an X position, then a Y position. Together, these sixteen bits represent the X,Y beginning position of a line segment. Next, the computer outputs the X,Y values of the ending position of that line segment and the driver unblanks the CRT beam to allow display of this motion between the start and end positions. Since this display is software driven, the total number of displayed lines is a function of the computer's speed. Refresh of the display is accomplished by having the computer scan the coordinates continuously. If there are too many points, the display will appear to blink or jitter. The CRT's P31 phosphor helps to correct this condition by allowing more time between refresh cycles. This will be helpful to people with slow computers!

Four instructions are used: Xmove, Ymove, Xstore and Ydraw. They are actually four output strobes from the computer which are enabled by the transfer of position data to the graphics driver storage registers. When Xmove (the I/O instruction outputting data to whatever output port is chosen) is executed, the contents of the microprocessor's accumulator are transferred via the eight bit data bus to an eight bit register, A13. Next a Ymove is executed and the accumulator contents are transferred to A11. Connected to these registers are two eight bit DACs, A14 and A15. The converters free run and will follow any change in value of the input registers. Within a few microseconds of data input, the respective raw X and raw Y voltages will have settled out and now represent, in analog form, the digital X and Y coordinates from the computer. As the instructions implied (Xmove and Ymove), the beam position changes to follow this new input but is not displayed since the beam is blanked during this period.

The actual analog voltage is a function of the 1408L8 DAC. This device behaves like a programmable current source set by the reference current at pin 14. In this particular design, the reference current is approximately 2.0 mA. Binary inputs to the DAC provide the equivalent fraction of the reference current at the output. For example, if the input to the DAC were 00100000, the output current would be 32/256 of the reference current. This signal is more useful and manageable in voltage form. That's the job of op amps A1 and A2. These op amps are configured as current to voltage converters with adjustable gain and offset. With an input of 00000000 binary, the output should be adjusted to a value of -2.5 volts. Adjusting the gain and offset trimmers alternately will produce the desired results. Conversely, an input of 10000000 should produce an output of +2.5 volts. This voltage range is not compatible with the display deflection amplifiers as received, and will be scaled by additional circuitry in the display driver electronics.

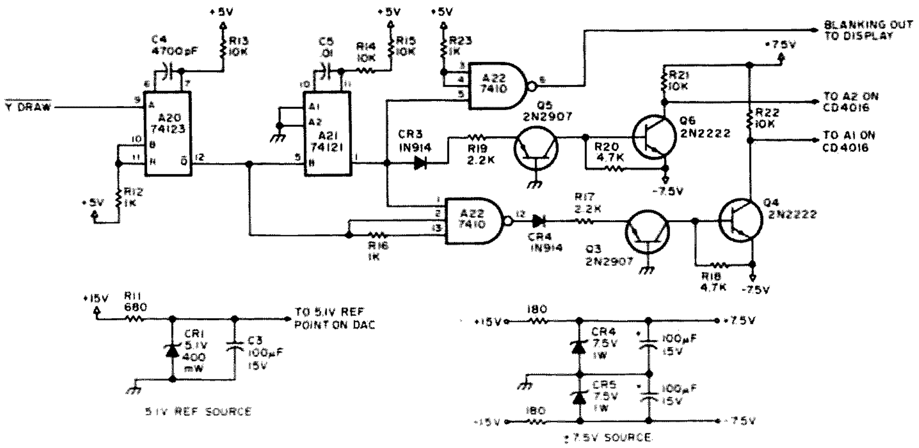

Fig. 3.

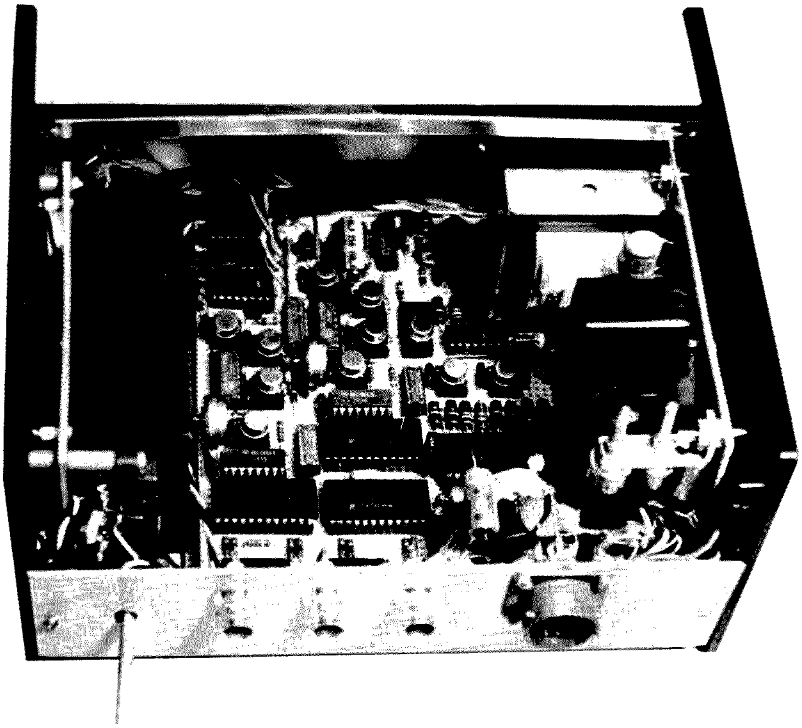

Vector Generator

The raw X and raw Y voltages from the DACs go to the vector generator which uses CD4016 quad analog switches. These switches are controlled by Q1, Q2, Q3, and Q4, a level shifter that changes the voltages from TTL levels to MOS levels, required by the CD4016s. Each switch section consists of a signal input and output terminal and a switch control terminal. When this control terminal is at +7.5 volts, the switch is on, and when the control terminal is at -7.5 volts, it is off. A DM8800 level shifter could be used in place of the four transistors and associated components if you can find it. The Suntronix graphics driver uses the transistor version in the interest of simply being able to obtain the parts readily.

In the quiescent state, switches 1 and 3 are on, 2 is off, and the output of the vector generator is equal to the raw input voltage. When a Ydraw is executed, A20 fires for approximately 20 microseconds and turns off switches 1 and 3. During this one shot period, raw X and raw Y voltages are settling toward the new input values loaded into the registers. These values correspond to the end point of the line segment. The display is still in a blanked state, and with switches 1 and 3 off, the vector generator is acting as a sample and hold circuit in a hold condition with the output constant.

When the first one shot times out, it fires A21 which has a period of approximately 100 microseconds. While A21 is on, the beam is unblanked, switch 2 turns on, and switches 1 and 3 remain off. In this state, the integrating capacitor at A9 starts charging through switch 2 along an exponential curve. Even though this voltage is actually 2 times the new raw value minus the original raw value, the one shot's period is adjusted to time out at the correct end point voltage and provide the appearance of a straight line. The fact that the output voltage changes along an exponential curve is irrelevant as long as both axes are identical. At the conclusion of this one shot period, switch 2 turns off, switches 1 and 3 turn on, and the display blanks again. The output voltage readjusts itself to exactly the new voltage through switch 3.

The driver electronics, to this point, have been set to produce minus and plus 2.5 volt signals for octal inputs of 000 and 377 respectively. This five volt magnitude is incompatible with the deflection amplifiers as purchased. The purpose of A6 and A10 is to scale and offset the vector generator outputs so they are within 0 to -3 volts as required. Each op amp is configured as a non-inverting summing amplifier. The span adjustment alternates the 5 volt absolute magnitude from the vector generator to 3 volts (plus 1.5 volts to -1.5 volts). The offset pot is then set to produce an offset of -1.5 volts with no signal in. The resulting signal level will be minus 3 volts for an octal 000 input and 0 volts for an octal 377 input. These two settings, as well as the gain and offset adjustments of the D to A converters, are best done by loading single values in the registers and not trying to program an actual display.

The vector generators will need slope and end match calibration. It is easiest to adjust the vector generator if a square with diagonals from corner to corner is displayed. The worst case for the driver, and hence the optimum case for calibration, is the display of a square with full scale coordinates. A square with two diagonals can be drawn with 6 line segments and is illustrated with full scale octal coordinate numbers in Fig. 5. The brute force display method is to write a program which treats each line segment as a separate entity and outputs the display coordinates to the driver sequentially. For this particular square, the program would do successive outputs from the accumulator of Xmove, Ymove, Xstore, and Ydraw, respectively, for the following series of octal coordinates: 000,000,000,377 (line segment 1); 000,377,377,377 (line segment 2); 377,377,377,000 (line segment 3); 377,000,000,000 (line segment 4); 000,000,377,377 (diagonal line segment 5); and 000,377,377,000 (diagonal line segment 6). Repeat continually for a constant display.

This again is the worst case display and requires optimum performance from the driver. End point timing problems will appear either as under- or over-shoot of line segment length and can be compensated by adjusting the end match pot on A21. Slope problems will result in the diagonals of the square not meeting in the corners. Slope adjustments are made with the appropriate pots at A5 and A9. It is important not to

A1-A10	LM301A Op amp
A11-A13	74100 8 bit Reg.
A14-A15	1408L8 8 bit D to A converter – Motorola
A16	7437 Quad NAND
A17	7404 Hex inverter
A18-A19	4016 CMOS quad analog switch
A20	74123 One shot
A21	74121 One shot
A22	7410 3 input NAND

All resistors ¼ W 5% unless otherwise noted.
All variable resistors are trimpots or equivalent.

Fig. 4. Parts list for graphics driver.

substitute any operational amplifiers which may have a slower frequency response than the LM301A's because this will compromise the driver's ability to track large changes in input coordinates and will attenuate full scale response. An additional area of concern is power supply bypassing and grounding. The largest ground plane and thickest wire appropriate for connecting grounds will result in the least noise and the cleanest display. Bypass capacitors (.1 microfarad/25 volt) should be placed between supply voltage points and the ground plane at a number of locations on the display driver board. Too many is always better than too few when it comes to bypass capacitors. Make the layout orderly and neat to reduce crosstalk and avoid ground loops. If separate power supplies for the +5 volts, +15 volts and -15 volts are built and connected by a cable, it is a good idea to put extra filter capacitors (100 microfarad or higher/25 volts) on these power lines where they enter the display board. Tantalum capacitors are the best choice but aluminum foil capacitors are adequate.

Now that you know how it works, it has once again come to the hard part; a decision must be made whether to "build or buy." Obviously, the quickest and easiest way to get this fascinating and useful instrument up and running is to purchase the graphics driver and the set of subassemblies being offered by Suntronix Company. Certainly that is not the only way. You may choose to build the graphics driver from scratch. With the printed circuit card available from Suntronix it should be a relatively simple and even enjoyable task. Merely follow the instructions in the following paragraphs and those that come with the PC card.

If you want to build the driver and elect not to purchase the driver PC card, some additional comments are in order.

Much of the electronics on the four PC cards that come with the subassemblies is superfluous when used as an X,Y display. The two 6 bit digital to analog converters previously used for character placement can be eliminated, as well as the actual starburst pattern generator. The only other alteration is to isolate the blanking signal. When these few tasks are completed and external voltages applied where the DAC inputs had been previously, one will have an operational 12" X,Y input CRT all ready for graphics.

Testing the Unmodified CRT Subassemblies

Before any modifications can be made, the operational integrity of the terminal must be established. Even though the refrigerator sized controller necessary for alphanumerics is missing, the unit is capable of self-scanning through a combination of positions and blanking control with the D to A cards as they are. To test the unit, install the four cards. The card closest to the screen is the horizontal DAC and the next card behind it is the vertical DAC. Both cards are identical. The third card in from the tube end is the integrator, clock conditioner, and starburst generator card. Behind it is the digital position and unblanking card. On the back connector, labeled J103, it will be necessary to put in a 1 MHz clock signal and an unblanking signal. The 1 MHz clock, which is required both for the high voltage generation and character position, is applied to pins 8 and 9 (8 ground and 9 high). A suitable TTL circuit to feed the 50 Ohm load presented by the CRT is illustrated in Fig. 6. It is not necessary that it be crystal controlled, but a clock input is required at all times to operate this unit. The unblanking signal is applied to pins 10 and 11 (10 ground and 11 signal in). With the clock signal applied, and -5 volts from pin 11 to ground, turn on the display. A fairly noticeable high pitched tone should be heard. This is the high voltage oscillator. Slowly rotate the intensity control (same shaft with the on/off control), and a pattern should appear. This pattern will appear as though one were looking at ten layers of chicken wire, but it is actually all starburst locations unblanked and displayed. Removing the -5 volts from the blanking input will leave one starburst pattern displayed on the screen in a random location. Repeated applications of the blanking input will make this single pattern appear to jump around the screen.

At this point, initial checkout is complete and modifications can begin. Although not absolutely necessary, it was determined that all of the modifications to this terminal could be carried out on the four PC cards. The easiest approach is always the preferred method when dealing with surplus electronics because of the numerous design revisions such equipment has had over the years. The latest schematics are always hard to find.

TTL Level Blanking Input

One of the first modifications necessary is to change the blanking level input from the previous level of -5 volts into 50Ω which is inconvenient to use. This negative voltage is an external requirement only. From there it feeds a level translator on the integrator card which converts it to a +4.5 volt blanking level compatible for use in the digital logic of the position and unblanking board. After transferring through all the logic, this

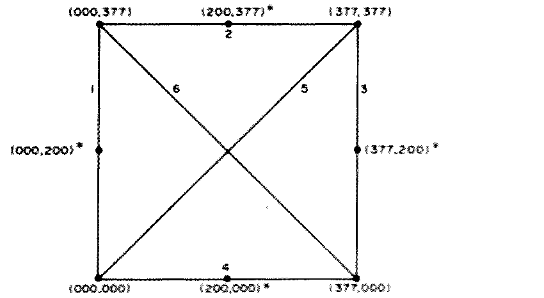

*Fig. 5. Example of a square for calibration. Note: Reference numbers refer to line segments. *Locations given for example only.*

signal leaves the board as an unblank to video amp signal on pin 3 of connector J107 on the base of the card. Between terminal E31 (connected to pin 3) and E30 is a jumper. By removing this jumper and attaching a separate TTL level input to terminal E31, this unblanking option can be externally controlled. The card itself cannot be discarded and has to be inserted for the unit to be operational. There is additional logic on this card necessary to generate the high voltage for the CRT. This concludes the modifications necessary to allow external blanking.

Eliminating the Starburst Generator

The starburst generator is located on the integrator and clock conditioner card. The output of this generator feeds directly to the video amplifier and must be disabled or a moving starburst will be displayed rather than a line segment when the beam is moved. This simple modification can be accomplished by removing a transistor, Q9, and cutting a tape between pin 15 and the junction of

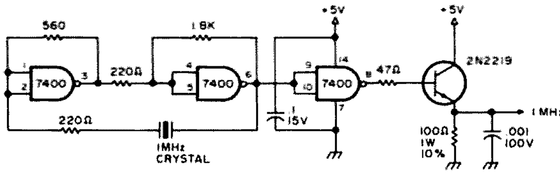

Fig. 6. 1 MHz oscillator. All resistors ¼ W 5% unless otherwise noted.

R21 and the emitter of Q8. By cutting these two signals to the video amp, we are eliminating a 2 bit D to A converter which continually causes the beam to trace a starburst pattern. What is left is a single dot on the screen whose position is completely controlled by the vertical and horizontal deflection voltages generated on the vertical and horizontal D to A cards. As in the previous case, there is other circuitry on this card, such as the clock conditioner, which requires that the card be inserted for the display to be used. This concludes the integrator card modifications.

Vertical and Horizontal Deflection Inputs

The modification to the deflection amplifiers to allow external deflection voltage input is indeed simple. It essentially means throwing away the two D to A converter cards and applying the external input voltages directly to the connector pins. Unfortunately, getting at these pins is difficult and requires removing the high voltage section. An easier method is to disconnect the DAC outputs on each card and attach the external input on the card in its place. The two cards are identical and require the same modification. Each of these boards is a 6 bit digital to analog converter card. The output of the converter is jumpered from terminal E1 to terminal E2. Terminal E2 is also the output pin M on the base of the card. By removing this jumper, the card electronics is disconnected. A coaxial cable can then be attached to terminal E2 on each board to provide the external input. There is plenty of foil grounding area on the cards to which to solder the coax shield directly, and this serves to reduce input noise considerably.

Warning! With all these modifications, the automatic blanking and sweep circuits of the unit have been defeated. This is of no real consequence, but extreme care must be taken not to damage the CRT. The blue-green phosphor is exceedingly bright, and has to be protected from over-intensity which would otherwise burn a permanent mark on the screen. The graphics driver is designed to prevent this occurrence, but at this stage of the checkout process, none of those protective circuits is involved.

It is important to check the display terminal as it stands now. For all practical purposes, it is a 12" oscilloscope at this point and can be checked out as such. The deflection voltage which must be externally applied to both horizontal and vertical inputs is in the range of 0 to -3 volts. It is of the *gravest* importance that the polarity not be reversed or the magnitude exceeded on these inputs. Schematically, it would appear quite acceptable to do this, but in actuality it is disastrous. The deflection yoke resistance is less than .1 Ohm and demands considerable current to drive it. This deflection current is directly proportional to the input voltage. When a 0 to -3 volt signal is applied, the deflection current sweeps from -2 Amps to +2 Amps approximately. The low voltage power supply is a real brute capable of better than 10 Amps. When voltages of other than the optimum are applied, the deflection will try to follow. The unfortunate problem is that the manufacturer didn't build the deflection amplifiers to handle this much current and

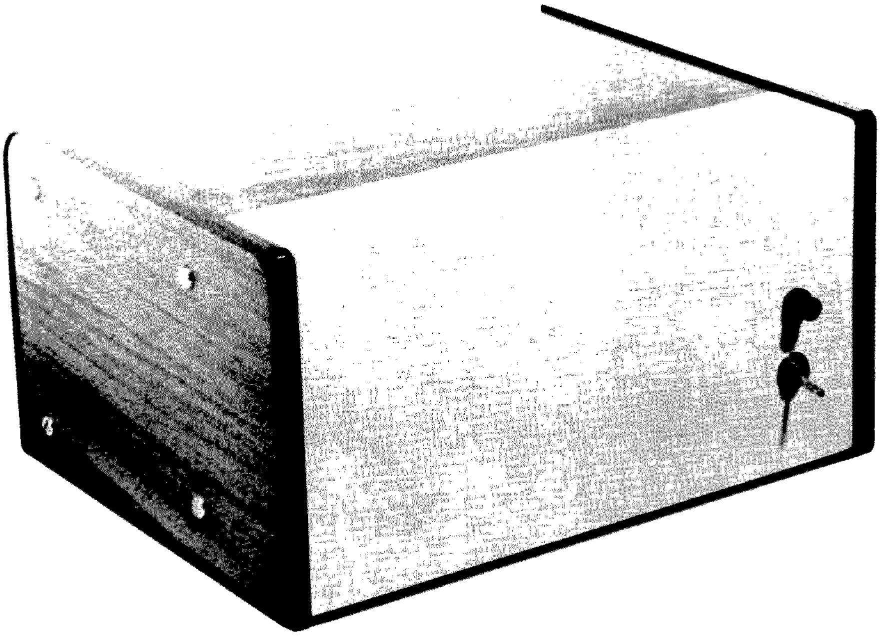

they go poof! They, of course, never were concerned with this problem because the D to A converter cards could not have produced these voltages. It is a wise idea, if this display is not going to be permanently attached to a driver of some sort, to put some clamping and voltage limiting circuitry on these inputs. It wasn't without hard reality that these facts were determined.

To continue the deflection checkout, it is necessary to have two 3 volt supplies. Two pair of "C" cells in series are quite adequate and safest. Fig. 7 is a sketch of these checkout requirements. Each 3 volt supply should be placed across a 10k Ohm pot with the positive side of the battery connected to the display chassis ground. The output voltage at the wiper of the pot will go from 0 to -3 volts with respect to chassis ground. When this fact is agreed upon, one can feel fairly safe in attaching this variable voltage to the horizontal and vertical inputs as described previously.

Now comes the acid test. Using a meter, set each input to -1.5 volts. This will correspond to a null or no deflection condition and should place the beam position directly in the center of the screen. The blanking input should be ungrounded and open and the 1 MHz oscillator turned on. Very carefully turn on the display, but don't immediately rotate the intensity adjustment. After allowing about 30 seconds warmup, and taking note the high voltage is on, slowly increase the intensity. Eventually there will appear a single dot near the center of the screen. Do not make it too bright because it will burn the screen. When this phase is accomplished, increase the voltage applied from the battery sources and notice that the beam moves proportionally with the voltage change. The horizontal input obviously is driving the beam in an X direction from left to right and back, while the vertical is driving it in the Y direction which is up and down. If both pots are turned simultaneously, the beam will move at an angle.

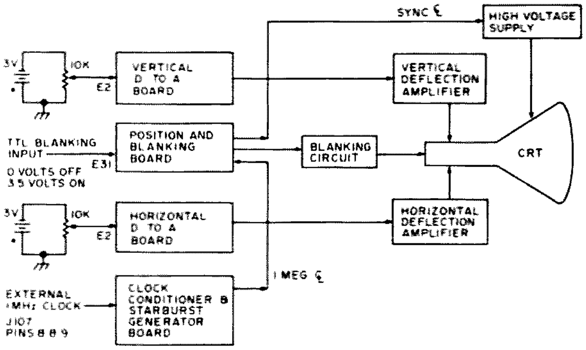

Fig. 7. Deflection amp subassembly checkout.

That's all there is to it. Be sure to use coax between the driver and the horizontal and vertical inputs and watch the ground loops. Properly adjusted and imaginatively programmed, this graphic display will very quickly become your favorite form of entertainment as well as an extremely useful tool.

The authors will be happy to hear from any who build this unit. We'll try to answer your questions as quickly as possible as fully as possible, but please, enclose an SASE when requesting answers. That will insure a reply. ■

by John Craig

I/O REPORT

"*73* West" is located on a hill outside of Lompoc, California, overlooking the beautiful Valley of the Flowers and in the "backyard" of Vandenberg Air Force Base. Because of this vantage point, we're treated to two beautiful sights not found in many spots around the country. One is the panorama of flower fields laid out below us during the summer; the other is the spectacular launching of spacecraft from Vandenberg. Another benefit derived from living here is that the weather never demands snow chains on our cars or galoshes on our feet . . . as you might find in other parts of the country (e.g., New Hampshire).

I couldn't have picked a better "in between" location for keeping track of the computer field here in California. San Francisco, and the "Silicon Valley," is about 4½ hours away and the tremendous amount of activity in the Los Angeles area is only 3 hours away.

We've set up a computer center here for evaluating and testing all the new microcomputer systems and peripherals coming on the market. The objective is to be able to better serve you, the reader, and manufacturers, by having additional facilities for checking out these units. I'm going to be generating both articles and new product reports on systems, options, and peripherals. And, not incidentally, the editorial functions for "I/O" are being taken care of here.

Aside from the systems which have been passing through regularly, I have my own personal home computer, which is of the wall-mounted variety. It's a Varian Data Machines model V-73 which, as I'm sure you're all aware, is fast becoming one of the most popular home computer systems among hobbyists. (Actually, I recently formed a user's group of privately-owned Varian computers and it turns out that there are only two other V-73s owned by individuals in the entire country . . . that I know of, anyway.) It may not be the most practical home system (because of the cost), but you can rest assured that it is *the* machine for *73 Magazine*! Varian was undoubtedly thinking of us when they gave it the 73 model number, right?

The V-73 is a microprogrammed computer. Through the use of ROMs, as a control memory, it is set up to emulate an earlier Varian computer . . . and through the use of a Writable Control Store board (which is equivalent to Erasable Programmable Read Only Memory . . . EPROMS), the machine can be programmed to emulate *any* computer. I'm in the process of developing the firmware (microprograms) to emulate the 8080 . . . so I can run all that software being developed out there.

If you haven't already discovered the "thrill" of getting your kids turned on to your computer, then maybe you should consider yourself lucky! Actually, I'm just kidding . . . one of the reasons I have a home computer is to introduce my kids to the fun. (They do have a habit of tying the machine up, and we may be seeing the beginning of a problem in home systems — a problem which will very likely be resolved by developing time-share systems for the home computer of the future.) One of the most popular programs run on the Craig system is a game called Qubic, and here you see my daughter Sheri tying up the machine playing it.

User Groups

As I mentioned earlier, I own a Varian Data Machines computer, and I have formed a user's group (of about ten people). By doing so, I've definitely increased the potential of my machine. We swap parts, software, and quite often some very good ideas. Regardless of what type of computer you have, you can reap the same benefits by checking around and seeing if a group has been formed for your particular machine. And, if one hasn't been formed, give some thought to starting one. This can be done by looking through some of the computer hobbyist newsletters and finding people with the same computer as yours. Be prepared for a little work if you decide to start one. But, once it's going . . . no problem . . . you just become another member.

If you know of any user groups which have been formed, drop me a line and we'll publish them in upcoming issues of *73*. Also, if you have word on any new computer clubs which have started up, let us know about them. We'll be publishing a list of clubs soon, too.

Dr. Dobb's Journal of Computer Calisthenics

This could be a big one! Jim Warren, who went to work for the People's Computer Company (PCC) part-time to crank out three newsletters on Tiny BASIC, is now the editor of *another* hobbyist magazine! All of the programs they publish (Tiny BASIC, interpreters, compilers, assemblers, cassette and floppy disc file systems, TV Dazzler software, graphics, music, and on and on) will go into the public domain . . . i.e., it's gonna be free! If you're interested, drop him a line: *Dr. Dobb's Journal of Computer Calisthenics & Orthodontia*, P.O. Box 310, Menlo Park CA 94025.

Baudot — Hardware or Software?

If you've got a Model 15 or Model 19 and it isn't hooked up to a computer, it should be. One of the things which would make me hesitate (if I were in your shoes) would be the interfacing and conversion from ASCII to Baudot and vice versa. Well, the interfacing isn't that much of a problem (see the article by Dick Whipple and John Arnold in the May *73*) . . . and, if you're hung up on the *hardware* for accomplishing the ASCII/Baudot conversion, don't be. There's no need to do it with hardware! The conversion in both directions can be accomplished very easily using two small *software* routines. Once again, I refer you to the above article. Software is really the only way to go for something like code conversion. Keep your eyes open for the articles by Don Alexander (the winner of the Grand Prize at the Altair Convention in March). He has a Model 19 for hard copy . . . and does the conversion via software. But you'll really want to catch his article on the home brew TVT he built. It has split-screen, multiple cursors, scrolling, and several other features. And . . . almost all of it is done with software! Stay tuned . . . it's all coming up in *73*.

The Sinister Microprocessor

If we're blessed with many more TV script writers like the guy who wrote a recent "Six Million Dollar Man," our kids are really going to have some warped ideas. (Incidentally, my family hates it when I occasionally join them to watch the program because of my running comments, such as, "How stupid!!", "They must

Continued on page 139

Larry Kahaner WB2NEL
4259 Bedford Ave.
Brooklyn NY 11229

Counters Are Not Magic -- They're Simple

--getting right down to basics

There are plenty of counter projects about. You can easily build one of them and it will work fine, first try, too. But how do they actually operate? It was hinted at in "Flip Flops Exposed," Nov/Dec 75, but many readers demanded more details.

My pleasure.

The basic counting circuit has four elements: a decade counter, a latch, a BCD-to-7 segment decoder/driver and a 7 segment LED. One of each will allow us to count from 0 to 9. To count higher we cascade, or add, more elements. Fig. 1 shows the block diagram of a counter circuit.

Let's work backwards. Believe me, it's easier.

Fig. 1. Block diagram of counter.

A Short Course in 7 Segment LEDs

The 7 segment LED is composed of 7 segments, each of which is one light emitting diode. When a current flows through, in the correct direction (it's a diode, after all), it lights. By placing the segments in the proper configuration we can form all the numbers (Fig. 2). Each segment is identified by a letter from a-g.

7 segment LEDs come in two varieties, common anode and common cathode. In the common anode case, all the anodes are connected together internally and we light each segment by touching it to ground. In the common cathode configuration, the negatives are connected together and we light the segments by connecting them to a positive potential. Fig. 2a shows the pin designations.

The Decoder/Driver

Operation of the decoder/driver requires a backstep to discuss binary numbers. You probably never thought about it, but our number system is based on tens (most likely because we have ten fingers or digits). We count like this: 1, 2, 3 . . . 7, 8 9; when we get to what we call ten, we are actually starting all over. Ten is really one-zero. Eleven is really one-one. But, because we use these numbers so often, we gave them special names.

Computers lend themselves to systems or bases other than our base ten. Base two, or binary numbers, are easily comprehended by these infernal machines because they use only two digits, 0 and 1. It takes a lot more room to count great numbers because we only have 0 and 1 to use, but computers digest them readily as 0 and 1 can be ON and OFF, an easy concept for the machine's limited intelligence.

Let's count in binary: 00,01,10,11. That's 0,1,2 and 3 in our decade system. From right to left, our system has columns of units (or ones), tens, hundreds, etc. In binary, we have units (or ones), twos, fours, eights, etc. The chart makes it easy.

The 7446 chip is a BCD (binary coded decimal)-to-7 segment decoder/driver. Internally, it is a maze of AND, NAND and NOT gates, but we don't have to go into that. For decoding purposes, it takes binary coded decimals, the binary numbers we talked about, and converts them to our base ten system for readout on a 7 segment

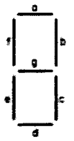

Fig. 2. 7 segment LED.

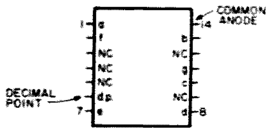

Fig. 2a. Pin configuration. Important note: Not all LEDs use this exact configuration. In some cases the NC pins may be the common anode connection. Check the specs for your LED and use Fig. 4 to connect it correctly.

Binary eights	fours	twos	ones	Decimal hundreds	tens	ones
0	0	0	0	0	0	0
0	0	0	1			1
0	0	1	0			2
0	0	1	1			3
0	1	0	0			4
0	1	0	1			5
0	1	1	0			6
0	1	1	1			7
1	0	0	0			8
1	0	0	1			9

Fig. 3.

LED. As shown in Fig. 4 it has four inputs: DCBA (the backward notation will be explained), and 7 outputs. Disregard the lamp test, RB input and RB output for now.

The input can be any binary number from 0000 to 1111. In our system that would be 0 to 15. Since we are dealing with only one 7 segment display, we are only concerned with 0000 to 1001, or 0 to 9.

Look at Fig. 5. If we put a low at inputs D, B and A, and a high at C, we make the number 0100 (see the reason for the DCBA order). In our decimal system, that is the number 4. The outputs corresponding to that input are highs at a, d and e, and lows at b,c,f and g. Looking at the LED chart, we see that the segments will be blank at a, d and e forming the number 4. Hasn't he got it backwards? Nope. This chip is for common anode LEDs. Thus, any segment assigned a zero, or low, will light. The 7448 chip is available for common cathode LEDs and works in a similar manner, only "negatively."

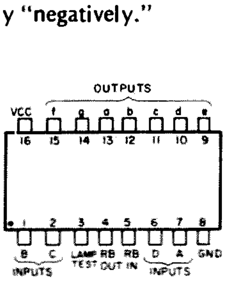

Fig. 4. 7446 decoder/driver (same as 7447).

Let's try another one. The number 8 in binary is 1000. We impose a high on D and a low on B, C and A. The output is then 0000000. All segments are grounded and they light. The number 8!

The Decade Counter

Except in ringalevio we all count by ones. We need something that will count by ones and convert it to binary for our decoder/driver. Not only does it have to count, but it must reset at ten. The 7490 chip was made for this purpose. Every time a pulse from our clock is triggered into the decade counter, it is noted and the output responds with a binary notation.

Fig. 6 shows the 7490 configuration. The outputs DCBA will respond to every clock pulse.

Pulse 1 will give us an output of 0001. The second pulse will yield an output of 0010; the third pulse gives an output of 0011. The chart is known as the BCD count sequence. Very simple.

The 7490 is versatile. The unused R inputs allow many options. By keeping pins 2 and 3 high, our LED will always read 0. Keeping pins 6 and 7 high will give us a constant 9 on the readout. A reset/count chart provided by the manufacturer shows the many choices that are available.

We even have choices for the counter to work properly. Any configuration in lines 4-7 is permissible. It's fun to experiment with all the possibilities, then check back to the chart and see that you were correct in your choices and outcomes.

The 7490 can also be used for other jobs besides decade counting. It can be used for divide-by-ten counting, divide-by-two counting and divide-by-five counting. All require different external connections. In our decade counting application, the output at pin 12 must be connected to pin 1 for correct operation.

The Latch

We are almost done. The 7475 chip is a quadruple bistable latch. Four flip flops, that's all (Fig. 7).

It acts as temporary storage between the decade counter and the decoder/driver. It does have an important function which may be of value in some cases. If the pins 4 and 13 are kept high, the pulses going through will be counted normally. If they are low, the number on the LED is held stationary. To restore normal counting, make it high again. This feature makes it easy to stop the count at any time without doing so at the input. If a situation arises where we are counting and we want to know at what count a certain transaction occurred, all we do is have that event cause pins 4 and 13 to go high.

Not only will we know at what number the event happened, but it will stay visible until we manually reset it to continue its count.

Putting It All Together

All three chips are inexpensive TTLs. They should cost no more than two dollars all together. The price of the LED will be determined by its size. The bigger the segments, the more costly it will be. And, it will also be nicer to look at. That's your choice. There are good 7 segment LEDs available for a dollar. They can be gotten as cosmetic rejects as one segment may be slightly dimmer than the rest. Sometimes you have to look closely to notice it at all. I bought some dollar LEDs of that type and the difference is only evident when all segments are lit and carefully compared.

The schematic is straight-

	Inputs D	C	B	A	Outputs a	b	c	d	e	f	g
0	0	0	0	0	0	0	0	0	0	0	1
1	0	0	0	1	1	0	0	1	1	1	1
2	0	0	1	0	0	0	1	0	0	1	0
3	0	0	1	1	0	0	0	0	1	1	0
4	0	1	0	0	1	0	0	1	1	0	0
5	0	1	0	1	0	1	0	0	1	0	0
6	0	1	1	0	1	1	0	0	0	0	0
7	0	1	1	1	0	0	0	1	1	1	1
8	1	0	0	0	0	0	0	0	0	0	0
9	1	0	0	1	0	0	0	1	1	0	0

Fig. 5. 7446 inputs and outputs.

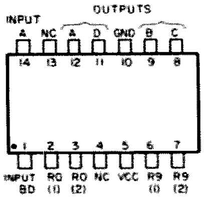

Fig. 6. 7490 decade counter.

BCD count sequence

count	D	C	B	A
	output			
0	0	0	0	0
1	0	0	0	1
2	0	0	1	0
3	0	0	1	1
4	0	1	0	0
5	0	1	0	1
6	0	1	1	0
7	0	1	1	1
8	1	0	0	0
9	1	0	0	1

Reset/count reset inputs				output
$R_{0(1)}$	$R_{0(2)}$	$R_{9(1)}$	$R_{9(2)}$	D C B A
1	1	0	x	0 0 0 0
1	1	x	0	0 0 0 0
x	x	1	1	1 0 0 1
x	0	x	0	count
0	x	0	x	count
0	x	x	0	count
x	0	0	x	count

x denotes either 0 or 1.

Fig. 6a. Charts for the 7490 decade counter.

forward. The pulses from our clock (which we all have by now) are the input. You can try to pulse it by hand, but you won't be able to do it. Your hand is just not sure enough to pulse it once, and only once. Try it. You will see the numbers jump a few no matter how carefully you attempt to give it just one shot. This phenomena is known as switch "bounce." Now you'll understand why flip flops are used as switching devices; mechanical means just CAN'T touch only one time.

Now, back to the other 7446 controls: lamp test, RB input and RB output. Lamp test means just that. If we put it low, all segments light giving us an indication of our LED's condition. When a low is applied to RB output, all segments go blank. It will continue counting though. Going back to a high will light them again wherever it is in the counting sequence. If, while you are counting, you desire to skip 0, put RB input to low. Every time zero comes around nothing is seen.

Cascading Counters

Our counter works fine, but it only counts to 9. For higher numbers we need more counters. And, we have to add them in such a way that the first counter triggers the second after the number 9. And, the third counter must be triggered such that it will work when the second counter goes over 9. This is called cascading.

If you check the operation of the counter, on a slow speed, with a VTVM, you will see that the numbers change on the 1 to 0 change. This is known as "trailing edge triggering." That's important to know. Looking at Fig. 6a, we see that the numbers 8 and 9 have very distinct characteristics. They are the only numbers to have 1 in the D column. If we have a second counter waiting at count zero, it will trigger upon a 1 to 0 change. By taking output D of our first counter and connecting it to the input pin 14 of our second counter, it will count "one" when our first counter passes 9. The first counter will return to 0 and the second counter has a 1. By placing the counters in the proper position we have one-zero, the number 10.

The schematic shows how easy it is to cascade counters. You might also like to make the reset controls a permanent fixture. This assures that the counters all start at zero.

Start counting.

Special thanks are extended to Isaac WN2ALK, who, without regard for his personal safety, came over late one night to supply me with some much needed data. ■

References

Signetics Handbook, 1972, Signetics Corp.

Huffman, Jim, "What Do You Want to Count?", *73 Magazine,* Feb. 1976.

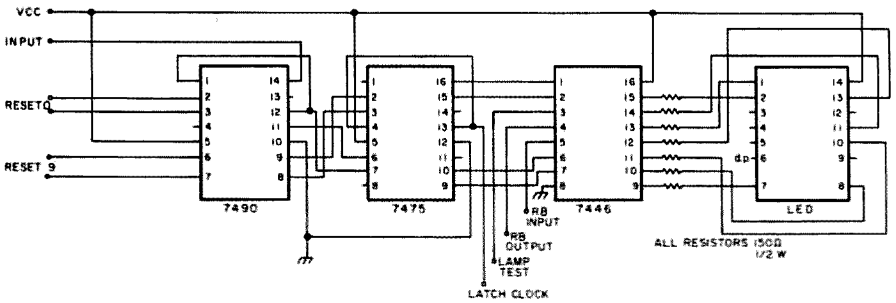

Fig. 8. Counter.

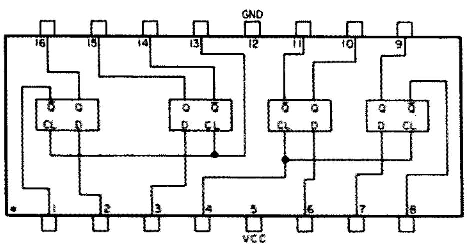

Fig. 7. 7475 quadruple bistable latch.

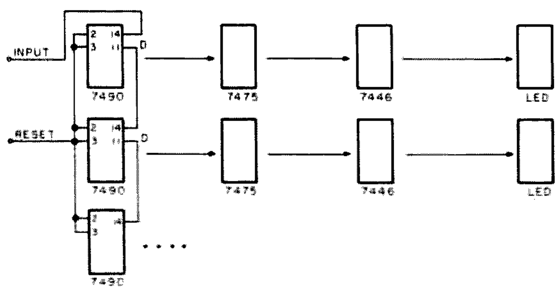

Fig. 9. Cascaded counters.

Social Events

MACK'S INN ID
AUG 6-8

The Wyoming - Idaho - Montana - Utah Ham Club would like to announce that the 44th Annual WIMU Hamfest will be held August 6-8 at Mack's Inn, Idaho just 20 miles west of Yellowstone National Park. There will be a full line of activities including our famous breakfast under the pines. Camping on the grounds is available plus motels, cabins and restaurants. Pre-registration is $6 per person, $1 for children under twelve. For registration or more info contact: WIMU, c/o Larry Jacobs WA7ZBO, 5655 So., 4060 West, Salt Lake City, Utah 84118.

OKLAHOMA CITY OK
AUG 7-8

The Oklahoma Ham Holiday and State ARRL Convention will be held Saturday and Sunday, August 7 and 8 in Oklahoma City, Oklahoma. The meeting will feature the largest flea market in the Southwest, special programs, technical seminars, equipment displays, and unique activities for the ladies. For information and advance registration write Oklahoma Ham Holiday, Post Office Box 20567, Oklahoma City, Oklahoma 73120.

CONCORDIA KS
AUG 8

Hamfest — Cloud County Community College, Concordia, Kansas, August 8, 1976. Swimming, tennis, and radio-controlled model airplanes for the kids. Events for the XYLs. Prizes, meetings: 2 meter, ARRL, MARS, satellite. WØFNS Award, ham auction. Lew McCoy will speak at August 7 banquet.

FT. WASHINGTON STATE PARK PA
AUG 8

The Mt. Airy VHF Radio Club (the Packrats) are holding their annual family picnic in the Flourtown Area of the Fort Washington State Park on Sunday, August 8, 1976 (rain date 15 August). Talk-in via W3CCX/3 on 52.525, 146.52, and 222.98/224.58 MHz.

SAUK RAPIDS MN
AUG 8

The St. Cloud Radio Club Annual Hamfest will be held on Sunday, August 8, 1976, from 10 am till closing, at the Sauk Rapids Municipal Park. Free parking and overnight parking, hot dogs and pop available. Swapfest and ham gear sale. Talk-in on 34/94 and 3925. Hope to see you all there. For further info, contact Bill Zins WAØOTO, St. Cloud Radio Club, PO Box 752, St. Cloud MN 56301.

PETOSKEY MI
AUG 14

Straits Area Radio Club Swap and Shop will be held August 14 from 8 am to 4 pm at Emmet County Fairgrounds on US 31, ½ mile west of southern junction of US 31 and US 131, in Petoskey, Michigan. All amateurs, CBers, SWLs, $1 admission, 50¢ per table, door prizes, lunch counter, free parking. Talk-in on 3.920 MHz, channel 1, 146.52 MHz.

EAST RUTHERFORD NJ
AUG 14

The Knight Raiders VHF Club's auction and flea market will be held on Saturday, August 14th, at St. Joseph's Church of East Rutherford, Hoboken Road, East Rutherford. Free admission, free parking, refreshments available. Talk-in will be on 146.52. Doors will open 10 am. Flea market tables: $6 for a full table, $3.50 for half a table. Reserve your tables in advance by writing to The Knight Raiders VHF Club, K2DEL, PO Box 1054, Passaic NJ 07055.

HUNTSVILLE AL
AUG 15

The North Alabama Hamfest will be held on Sunday, August 15 at The Mall in Huntsville, Alabama. A hamfest supper will be held on Saturday night. Events include prize drawing, flea market, ARRL forum, MARS meetings, displays, and XYL programs. Talk-in on 146.94 and 3965. For more information contact N.A.H.A., PO Box 423, Huntsville AL 35804.

NEW CASTLE DE
AUG 15

Delmarva's new annual hamfest will be held August 15, 1976 at Wilmington College, New Castle, Delaware — U.S. Route 13 just north of Delaware Route 141 in New Castle, New Castle County. Tail-gating $2.50 per space. Rummage and display tables $5 per table. Food and camping available. Ladies' Bingo. Admission $1.75 advance — $2.50 at gate. Children are free. Make all checks payable to Delmarva Hamfest Inc. Mail all requests for reservations and information to John Low K3YHR, 11 Scottfield Drive, Newark DE 19713.

PUYALLUP WA
AUG 21-22

The Radio Club of Tacoma (W7DK) presents HAMFAIR-76, Saturday and Sunday, August 21st and 22nd, at the Pierce County Fairgrounds, 11 miles South of Puyallup Washington. This ARRL sanctioned event features technical seminars, women's and children's activities, contests, flea market, Saturday evening dinner and entertainment, Sunday morning loggers breakfast, and free camping with electrical hookups. First prize is an ICOM IC-230. Contact W7GPR, 3421 E. 138th St., Tacoma WA 98446, phone 531-3821.

SPRINGFIELD MO
AUG 22

The Southwest Missouri Amateur Radio Club will hold its annual hamfest, swap meet and family picnic on August 22, 1976, at Lake Springfield Park. This picnic attracts over two hundred radio amateurs and their families from southwest Missouri, northwest Arkansas, southeast Kansas, and northeast Oklahoma each year. For more information write: James A. Crooke, Secretary, Southwest Missouri Amateur Radio Club, 1601 South Kimbrough Avenue, Springfield MO 65807.

AURORA IL
AUG 22

The Fox River Radio League W9CEQ Hamfest will be held August 22, 1976 at beautiful Phillips Park, east edge of Aurora, U.S. Hwy. Rt.

Ham Help

Would appreciate plans for SIMPLE Novice band receiver.

C. E. Moore
1112 W. Tucker
Arlington TX 76013

Please place my name in your Ham Help column. I am willing to help people in the NYC-Long Island area get their licenses, or to help Novices upgrade.

David M. Krumholz WA2YYL
148-10 Huxley St.
Rosedale NY 11422

Since I first become a ham, I subscribed to *QST* first, then *Ham Radio*. Both left a lot to be desired. *QST* is the better of the two, however; *Ham Radio* was just plain over my head. Then a friend and fellow ham straightened me out and I subscribed to *73*. At first glance I knew I had found the right mag for me. I must say some of the best and most interesting material is found in your editorials and letters from other hams. If you'd like you can use this one for a sales pitch. Also, please enter my name into your "Ham Help" column for anyone who needs help. I started a ham club here in Hoosick Falls and have gotten 5 guys their Novices. Three new members are about ready for theirs. That is why I am sending for code tapes. Six of us are boning up for our General tests. Also, I would like to add my coupon to extend my subscription for three years. Keep up the good work for your fellow hams.

Dave Kessler WN2SSR
Hoosick Falls NY

Please add my name to your list of helpers. I'd be glad to lend assistance to any aspiring hams-to-be in the Pittsburgh vicinity.

Peter Wilson WB3ALS
1260 Fox Chapel Rd.
Pittsburgh PA 15238
(412)-963-9138

I am not an amateur radio operator at this moment, but I really want to become one. I get a copy of *73* monthly at the newsstand. I love reading it. Could you please list me in your "Ham Help" column? Thank you very much.

Edward Best
26-A Duke Manor Apts.
311 S. LaSalle St.
Durham NC 27705
(919)-383-1223

In your person I should like to ask your outstanding magazine to give me help. I would like to get in touch with a ham whose profession is linguistics — more concretely, applied linguistics, terminology, linguostatistics. My ex-call was UA6LMX; my new call has not been received yet. Languages are English and Russian. I'm sorry for the trouble I'm giving you.

Serge P. Kushneruk
Box 34, GPO, Tyumen
USSR

First, to the Ham Help column — Help!!! I'm a CBer, KNK2337, who has been interested in amateur radio for almost sixteen years but never had the free time necessary for more than superficial learning. I've also been studying electronics by home study for three months, so I'm not a complete ignoramus about electronics, just close. Am very interested in FM, SSB and 2 meter operations. I'd greatly appreciate help in making the transition.

Do you guys personally know of any ham shops in the area? CB seems to be all over the place, but the only other radios I've seen so far are scanning monitors. I've gotten three issues of your magazine now and I think it's great. I am interested in computers and think you should keep those articles in. I may understand in general only every fourth word, but it's a joy to struggle for the rest. Thanks for your help.

Gregory W. Lincavage
23 Kingsland St.
Nutley NJ 07110

I would like to know if anyone can obtain a matching speaker for an Allied AX-190 receiver. I would be very interested in purchasing this.

Mike Evans
Box 985
Ft. Smith AR 72901

#30. All day family fun, picnic, zoo, lake and flowers. Same old price — $1.00 advanced with SASE to FRRL, PO Box 443 Aurora IL 60507. Talk-in on 146.94.

RENO NV
AUG 28

Nevada Amateur Radio Association will again host the Sierra Nevada Hamfest, August 28, 1976, at the California Building, Idlewild Park, Reno, Nevada. Pre-registration $10, until August 21. For further details, write P.O. Box 2534, Reno, Nevada 89505.

ATLANTIC CITY NJ
AUG 28-29

The Personal Computing '76 Consumer Trade Fair will be held August 28-29, 1976 in Atlantic City, New Jersey. Seminars and technical talks, major exhibits, demonstrations, door prizes, and free literature all about software and hardware development, microcomputers, memories, comparisons, interfacing, implementation, AMSAT, computerized music, video terminals, construction, printers, games, and tapes. Admission $5 advanced, $7.50 at door (includes exhibits and seminars). Exhibition booths — call (609) 927-6950.

LA PORTE IN
AUG 29

The combined La Porte County Amateur Radio Clubs will hold their Fall Hamfest on Sunday, August 29th, 1976 at the La Porte County Fairgrounds in La Porte, beginning at 7 am Chicago time. Overnight camping available. Indoors in case of rain. No table or set-up charge. Paved midway, good food and drink. $2 donation at the gate. For more information write: PO Box 30, La Porte IN 46350. Talk-in on 01-61 and 94 simplex.

SO DARTMOUTH MA
AUG 29

The Southeastern Amateur Radio Club is having a Flea Market and Picnic on August 29, 1976 at the Stackhouse Fairgrounds in So. Dartmouth MA. Space will be $2 and table an additional $2. Homemade food, magic show for the children, and many raffles. For a flier write: Arthur Sylvia, 317 Nemasket St., New Bedford MA 02740.

EL PASO TX
SEPT 4-5

The ARRL Hamfest will be held eptember 4-5 at the elegant Vista Motor Inn. Seminars, solar power, xotic modes, OSCAR and fleaarket. Write PO Box 24050, El Paso X 79914. Visit us on Labor Day weekend!

MENA AR
SEPT 4-5

The Queen Wilhelmina Hamfest 1976 is Saturday and Sunday, eptember 4 and 5, at Queen Wilhelmina State Park, Rich Mountain, Mena, Arkansas. Excellent accommodations and food at the newly restored historic Queen Wilhelmina Castle. Door prizes hourly, grand prize, new equipment displays, flea market, camping area with utilities and rest rooms, amusements for harmonics. Talk-in 146.52. For more information write WB5CXX, P.O. Box 5191, Texarkana TX or phone (214) 838-0625.

DANVILLE IL
SEPT 5

The Danville Hamfest will be held at Douglas Park, Danville, Illinois September 5. Downstate Illinois' largest. Great prizes. Advance tickets $1.75 ea., 3/$5 with an SASE to Jim Wilson, 308 First, Ridgefarm IL 61870. Talk-in 22/82 and 3910.

YORK PA
SEPT 5

The 21st Annual York County Hamfest will be held September 5th, rain or shine, 10 miles west of York PA; ½ mile west of York Airport, turn south off Rt 30 to Elickers Grove. Registration begins at 9 am — fee $3.00. All adults and amateurs are expected to register, XYLs and children free. A limited number of flea market tables are available inside by advance reservations *only*. Contact hamfest committee. There will be a $5.00 charge for using electric power. Talk-in 146.04-64; 28-88; 52-52. For more information write or phone Leroy Frey K3POR, 170 S. Albemarle St., York PA 17402, phone 854-1203.

BEREA OH
SEPT 11

The '76 Cleveland Hamfest presented by the Cleveland Hamfest Association will be held Saturday, September 11 at 8 am to 6 pm at the Cuyahoga County Fairgrounds, Berea, Ohio. Eastland Road entrance only to County Fairgrounds with easy access from Hopkins Airport, Interstate I-71, I-90 or Ohio Turnpike. Tickets $1.50 before August 31; $2.00 at 0800 for all 12 or over when gates open. Asphalt quad flea market parking $1 additional per space at 0700. Bring your own tables and shade. Registration: $1.50 tickets by mail before August 31 with check or money order to: Cleveland Hamfest Association, P.O. Box 43413, Cleveland, Ohio 44143.

MELBOURNE FL
SEPT 11-12

The 11th annual Melbourne, Florida hamfest will be held Saturday and Sunday, September 11-12, 1976, from 9 am to 5 pm each day in the air-conditioned Melbourne Civic Auditorium located on Hibiscus Boulevard. Donation is $2.50 per adult. Full program includes forums, meetings, auction, swap tables, commercial exhibits, awards, prizes, etc. Talk-in on 25/85 and 52/52. Sponsored by Platinum Coast Amateur Radio Society. For more info write PO Box 1004, Melbourne FL 32901. FCC exams in Ramada Inn Saturday at 8 am for General, Advanced, and Extra. Form 610 and $4 fee must be filed with FCC, Room 919, 51 S.W. First Avenue, Miami, no later than August 31, 1976.

FINDLAY OH
SEPT 12

The 34th Annual Findlay Hamfest will be held on Sept. 12 at Riverside Park, Findlay, Ohio. Talk-in 146.52. For advanced tickets and/or info write: Clark Foltz W8UN, 122 W. Hobart St., Findlay, Ohio 45840 (SASE please for under 5 tickets).

MALAGA NJ
SEPT 12

The South Jersey Radio Assn. 28th Annual Hamfest will be held September 12, 1976, 10 to 5 pm, at Molia Farms, Malaga, New Jersey. Lake, picnic grounds and food available. Tailgate sales, swap shop and door prices. Family tickets: advance sales — $2.50, gate sales — $3.50. Advance sales send SASE to Jack Koch, Box 103, Cherry Hill NJ 08002. Talk-in 146.52.

HAMBURG NY
SEPT 18

The Hamburg International Hamfest will be held September 18, 1976 at the Erie County Fairgrounds in Hamburg, New York. Directions: Take the New York State Thruway to the Blasdell Exit (Exit 56). Recreational vehicles will turn right on Mile Strip Road and turn left on Route 62 South (first major intersection). Follow the signs to the Erie County Fairgrounds entrance. All other vehicles turn left on Mile Strip Road and turn right on McKinley Parkway (first major intersection). Hamfest will include giant flea market, technical forums, picnic facilities, excellent programs, non-amateur displays, code contest, women's programs, organization meetings, equipment displays and FM hospitality room, and thousands of dollars in awards. Admission: $3 at gate, $2.50 in advance. $1 for flea market parking. Children under 12 admitted free. Talk-in stations will be on the WR2ABU repeater (146.31 in, 146.91 out), 146.52 simplex, 7.255 (ECARS), and 3.925. For more information contact Bert Jones W2CUU, 143 Orchard Drive, Kenmore NY 14223, tel. 716-873-3984.

NEW KENSINGTON PA
SEPT 19

The Skyview Radio Society's Swap & Shop will be held on Sept. 19, 1976 at the Skyview Radio Club, New Kensington PA. Registration $1. Talk-in 52-52 and 04-64.

NEW BERLIN IL
SEPT 26

The Sangamon Valley Radio Club Hamfest will be held September 26 at the Sangamon County Fairgrounds, New Berlin, Illinois, twelve miles west of Springfield (Illinois state capitol) on Route 36. There will be food, programs, covered pavilion, and nearby camping. See Lincoln shrines. Talk-in 28/88 AF9AFA. Tickets $1.00. Write: K9HDZ, 622 Magnolia, Rochester, Illinois.

Oscar Orbits

Oscar 6 Orbital Information					Oscar 7 Orbital Information			
Orbit	Date (Sept)	Time (GMT)	Longitude of Eq. Crossing W	Mode	Orbit	Date (Sept)	Time (GMT)	Longitude of Eq. Crossing W
17736	1	0052:31	69.9	AX	8210	1	0038:10	59.3
17749	2	0147:27	83.7	8	8223	2	0132:27	72.9
17761	3	0047:23	68.7	A	8235	3	0031:47	57.7
17774	4	0142:19	82.4	8	8248	4	0126:04	71.3
17786	5	0042:15	67.4	A	8260	5	0025:24	56.1
17799	6	0137:10	81.2	8	8273	6	0119:41	69.7
17811	7	0037:06	66.2	A	8285	7	0019:02	54.6
17824	8	0132:02	79.9	BX	8298	8	0113:18	68.1
17836	9	0031:58	64.9	A	8310	9	0012:39	53.0
17849	10	0126:54	78.7	B	8323	10	0106:56	66.5
17861	11	0026:50	63.7	A	8335	11	0006:16	51.4
17874	12	0121:45	77.4	8	8348	12	0100:33	64.9
17886	13	0021:41	62.4	A	8361	13	0154:58	78.5
17899	14	0116:37	76.1	B	8373	14	0054:10	63.3
17911	15	0016:33	61.1	AX	8386	15	0148:27	76.9
17924	16	0111:29	74.9	B	8398	16	0047:47	61.7
17936	17	0011:25	59.9	A	8411	17	0142:04	75.3
17949	18	0106:20	73.6	8	8423	18	0041:25	60.1
17961	19	0006:16	58.6	A	8436	19	0135:42	73.7
17974	20	0101:12	72.4	8	8448	20	0035:02	58.6
17986	21	0001:08	57.4	A	8461	21	0129:19	72.1
17999	22	0056:04	71.1	BX	8473	22	0028:39	57.0
18012	23	0150:59	84.9	A	8486	23	0122:56	70.5
18024	24	0050:55	69.9	8	8498	24	0022:16	55.4
18037	25	0145:51	83.6	A	8511	25	0116:33	68.9
18049	26	0045:47	68.6	B	8523	26	0015:54	53.8
18062	27	0140:43	82.4	A	8536	27	0110:11	67.3
18074	28	0040:39	67.4	8	8548	28	0009:31	52.2
18087	29	0135:55	81.1	AX	8561	29	0103:48	65.7
18099	30	0035:31	66.1	B	8573	30	0003:08	50.6

FCC

Before the
FEDERAL COMMUNICATIONS
COMMISSION
Washington, D.C. 20554
FCC 76-537
41127

In the Matter of
Amendment of Part 97 of the
Commission's Rules concerning operator
classes, privileges,
and requirements in the
Amateur Radio Service.

Docket 20282

RM-1016 1363, 1454
1456, 1516, 1521, 1526,
1535, 1568, 1572, 1602,
1615, 1629, 1633, 1656,
1724, 1793, 1805, 1841,
1920, 1947, 1976, 1991,
2030, 2043, 2053, 2149,
2150, 2162, 2166, 2216,
2219, 2256, 2284, 2449

FIRST REPORT AND ORDER
Adopted: June 9, 1976;
Released: June 15, 1976

By the Commission:

1. On December 16, 1974, the Commission released a Notice of Proposed Rule Making in this proceeding which was published in the Federal Register on December 20, 1975 (39-FR44042). Comments were due by June 16, 1975, and reply comments by July 16, 1975. The due dates for both comments and reply comments were extended, and the final cutoff dates were set at July 16, 1975, and September 1, 1975, respectively.

2. The purpose of the Notice was to consolidate into one rulemaking proceeding the many petitions we had received which dealt one way or another with changing the structure of the Amateur Radio Service. We recognized that the requests found in the petitions were often interrelated, and should not be handled on a piecemeal basis. For this reason, we undertook a fundamental review of the entire structure of the Amateur service and proposed various changes in that structure.

3. The major proposed rule changes contained in the Notice were the following:

a) Creation of a "dual ladder" licensing structure;

b) Creation of a Communicator Class license having no telegraphy privileges or examination requirement;

c) Establishment of new power limits based on transmitter peak envelope power output;

d) New restrictions on licenses obtained by means of volunteer-administered mail examinations;

e) Issuance of lifetime Amateur Extra Class operator licenses; and

f) Modification of the frequencies and modes available to certain license classes.

4. An estimated 4000 comments and reply comments were filed in this Docket. They ranged from postcards to multipage typewritten statements, often with very detailed analyses of our proposals coupled with suggested revisions thereto. All of these comments have been read and carefully considered. Also, in addition to these documents, we have closely examined the results of a poll taken by the American Radio Relay League (ARRL) which elicited responses from many thousands of that organization's members.

5. Because of severe manpower and time restrictions brought about by the recent surge in Citizens Radio Service applications, we are unable at this time to undertake the preparation of a comprehensive Report and Order which would address all of the issues raised in the Notice. We are therefore releasing this First Report and Order in which several matters of importance will be addressed, and we plan to prepare additional Reports and Orders in the future as our workload permits.

6. Firstly, we will address the matter of examinations administered by volunteer examiners. Under the system put forth in the Notice, all licenses obtained in this way, except Novice licenses and licenses granted in those instances where the applicant qualified for a volunteer-administered examination on the basis of a protracted disability which prevented travel to a Commission examination point, were to be non-renewable. Such licenses were to be temporary, and the licensees would have been required to successfully complete a regular Commission-supervised examination in order to remain licensed. This arrangement would have required all presently licensed Technician (C) and Conditional licensees to undergo reexamination by the Commission. Failure to successfully complete the Commission-supervised examination would have

meant that the licensee could not have continued to renew his license upon expiration.

7. As one of the broad objectives in this proceeding, we stated in the Notice that we desired to preclude, or at least minimize, any adverse impact upon presently licensed amateurs. The sentiments in the comments overwhelmingly supported this posture, and we continue to believe it to be the only reasonable course of action. Many comments objected to our "non-renewability" proposal for volunteer-administered examinations as being detrimental to amateur radio in general and excessively burdensome to thousands of licensees who, for valid reasons, did not undertake Commission-supervised examinations. Moreover, inasmuch as the Technician Class license program has always been, by Commission intent, based primarily on volunteer-administered examinations, a mass recall of these persons does not now appear equitable. We are in basic agreement with these objections, and have modified our proposal to blunt any ill effects on present licensees. We believe the limited resources available to us can be best utilized elsewhere.

8. However, our experience with the volunteer examination program has shown that it has been abused. Our routine call-in program of Technician(C) and Conditional Class licensees has shown that over 90% of such persons either fail to appear for re-examination, or if they do appear, fail the examination. Such results tend to confirm the suspicion that some such licensees obtained their licenses fraudulently. We have therefore determined to limit the availability of volunteer-administered examinations to the following categories of applicants:

a) Applicants for the Novice license; and

b) Applicants who show by physician's certification that they are unable to appear at a Commission examination point because of a protracted disability preventing travel.

All applications for mail examinations on the basis of a protracted disability should now be sent to the FCC field office nearest the applicant, rather than to the Commission's offices in Gettysburg, Pennsylvania. Such examinations will be conducted by a volunteer examiner selected by the Commission, or by Commission personnel.

9. Persons now holding licenses obtained on the basis of a mail examination will not be adversely affected by this rule change. All such licenses may continue to be renewed, and Rule Section 97.25 is being modified to indicate that examination credit will be given for those elements which were passed without Commission supervision. For instance, a Technician(C) licensee will automatically be given credit for Element 3 should he attempt to obtain a General Class license. He would be required only to pass Element 1(B), the 13 wpm telegraphy test. We believe that this "grandfather" provision penalizes no one, and will encourage such licensees to upgrade. Upon application for license modification or renewal, all present Conditional Class licensees will be issued General Class licenses, and all Technician(C) licensees will be issued Technician licenses. Henceforth, all applicants passing Elements 1(B) and 3 on a volunteer-administered examination will be issued a General Class license. The Conditional Class will no longer be issued.

10. The elimination of the 175 mile distance eligibility criteria for the Conditional Class (now General Class) license will not, in our view, impose an undue hardship on those persons sincerely interested in obtaining an amateur license. The number of such applications received is now slight, and the enlargement of the Commission's examination schedule for remote points all but eliminates the usefulness of the 175 mile criterion. With respect to the Technician(C) Class license, we do not foresee any significant adverse impact resulting from its elimination. The vast majority of persons seeking that license live within convenient travel distance of a Commission examination point, and our examination policy with respect to the Technician Class is now consistent with our policy governing all license classes except Novice. As proposed, we are also deleting the availability of mail examinations on the basis of eligibility criteria set out in §97.27(c) and (d).

11. A related issue we will address at this time involves the Novice Class license. Many thousands of Novice examinations are given each year, and this has been the gateway to Amateur radio for over half of all present licensees. We believe the experience of taking the Novice test to be very worthwhile, inasmuch as there is no overlap in the Novice examination questions and the questions found on more advanced examinations. We are therefore amending the Rules to require that all persons entering Amateur Radio Service, at any level, successfully complete examination element in addition to the other examination elements presently required for the license examination being undertaken. We are also at this time deleting the provision in Section 97.9(f) which prohibits the issuance of a Novice Class license to a person who has held within the prior 12 month period any class of Amateur radio license. We believe this provision serves no useful purpose and has prohibited otherwise qualified persons from remaining in Amateur radio.

12. The final matter we will touch on in this First Report and Order involves the privileges available to Technician and Novice Class licensees. Until several years ago, it was permissible for a licensee to hold both the Novice and Technician Classes of license at the same time. Such dual licensing was

subsequently prohibited in Section 97.9(f), which states that the Novice Class license may not be concurrently held with any other class of license. We have received several petitions to lift this restriction, and in our Notice we proposed to include Novice Class privileges in the Technician Class license. We are herein adopting that proposal, which was widely supported in the comments. We are also modifying the maximum permissible transmitter power input which Novices, and all other license classes, may utilize when operating on Novice frequencies. We are limiting to 250 Watts the maximum power input which may be used by any class of operator transmitting in Novice sub-bands. We are adopting this change for two reasons; firstly, it will mean that a Novice can buy equipment which will be readily useable and practical when he upgrades to General Class and above. Presently, in order to conform to the 75 Watt power limit, Novices oftentimes are forced to buy low power transmitters which they find have limited usefulness outside Novice sub-bands; and secondly, we see no reason to permit non-Novices to utilize high power in a sub-band where such power gives them a significant advantage over a license class which is restricted to that sub-band.

13. In view of the foregoing, we are of the opinion that the amended rules as discussed above are in the public interest, convenience, and necessity. Accordingly, pursuant to authority contained in Section 4(i) and 303 of the Communications Act of 1934, as amended, IT IS ORDERED, that Part 97 of the Commission's Rules IS AMENDED as set forth in the Appendix attached hereto. These amendments become effective July 23, 1976.

FEDERAL COMMUNICATIONS COMMISSION
Vincent J. Mullins
Secretary

APPENDIX

Chapter 1, Part 97 of Title 47 of the Code of Federal Regulations is amended as follows:

1. In Section 97.7, paragraphs (b), (c) and (d) are amended and (e) is added to read as follows:

§97.7 *Privileges of operator licenses.*

* * * * *

(b) *General Class.* All authorized amateur privileges except those exclusive operating privileges which are reserved to the Advanced Class and/or Amateur Extra Class.

(c) *Conditional Class.* Same privileges as General Class. New Conditional Class licenses will not be issued. Present Conditional Class licensees will be issued General Class licenses at time of renewal or modification.

(d) *Technician Class.* All authorized amateur privileges on the frequencies 50.1-54 MHz and 145-148 MHz and in the Amateur bands above 220 MHz. Such licenses also carry the full privileges of the *Novice Class* license.

(e) *Novice Class.* Radiotelegraphy in the frequency bands 3700-3750 kHz, 7100-7150 kHz (7050-7075 kHz when the terrestrial station location is not within Region 2), 21,100-21,200 kHz, and 28,100-28,200 kHz, using only Type A1 emission.

2. Section 97.9 is amended to read as follows:

§97.9 *Eligibility for new operator license.*
Anyone except a representative of a foreign government is eligible for an amateur operator license.

3. Section 97.11(b) is amended to read as follows:

§97.11 *Application for operator license.*

* * * * *

(b) An application (FCC Form 610) for a new operator license, including an application for change in operating privileges, which requests an examination supervised by a volunteer examiner under the provisions of §97.27, shall be submitted to the FCC field office nearest the applicant. Applications for the Novice Class license should be sent to the Commission's offices in Gettysburg, PA 17325. All applications should be accompanied by any necessary filing fee.

* * * * *

4. Section 97.23 is amended to read as follows:

§97.23 *Examination requirements.*
Applicants for operator licenses will be required to pass the following examination elements:

(a) Amateur Extra Class: Elements 1(C), 2, 3, 4(A) and 4(B);

(b) Advanced Class: Elements 1(B), 2, 3, and 4(A);

(c) General Class: Elements 1(B), 2, and 3;

(d) Technician Class: Elements 1(A), 2, and 3;

(e) Novice Class: Elements 1(A) and 2.

5. Section 97.25(a) is amended to read as follows:

§97.25 *Examination credit.*

(a) An applicant for a higher class of amateur operator license who holds any valid amateur license will be required to pass only those elements of the higher class examination that are not included in the examination for the amateur license held.

* * * * *

6. Section 97.27 is retitled and amended to read as follows:

§97.27 *Mail examinations for applicants unable to travel.*
The Commission may permit the examinations for an Amateur Extra, Advanced, General, or Technician Class license to be administered at a location other than a Commission examination point by an examiner chosen by the Commission when it is shown by physician's certification that the applicant is unable to appear at a regular

Commission examination point because of a protracted disability preventing travel.

7. Section 97.28 is retitled and amended to read as follows:

§97.28 *Manner of conducting examinations.*

(a) Except as provided by §97.27, all examinations for Amateur, Extra, Advanced, General, and Technician Class operator licenses will be conducted by authorized Commission personnel or representatives at locations and times specified by the Commission. Examination elements given under the provisions of §97.27 will be administered by an examiner selected by the Commission. All applications for consideration of eligibility under §97.27 should be filed on FCC Form 610, and should be sent to the FCC field office nearest the applicant. (A list of these offices appears in §0.121 of the Commission's Rules and can be obtained from the Regional Services Division, Field Operations Bureau, FCC, Washington, D.C 20554, or any field office.)

(b) Unless otherwise prescribed by the Commission, examinations for the Novice Class license will be conducted and supervised by a volunteer examiner selected by the applicant. The volunteer examiner shall be at least 21 years of age, shall be unrelated to the applicant, and shall be the holder of an Amateur Extra, Advanced, or General Class operator license. The written portion of the Novice examination, Element 2, shall be obtained, administered, and submitted in accordance with the following procedure:

(1) Within 10 days after successfully completing telegraphy examination element 1(A), an applicant shall submit an application (FCC Form 610) to the Commission's office in Gettysburg, Pennsylvania 17326. The application shall include a written request from the volunteer examiner for the examination papers for Element 2. The examiner's written request shall include (i) the names and permanent addresses of the examiner and the applicant, (ii) a description of the examiner's qualifications to administer the examination, (iii) the examiner's statement that the applicant has passed telegraphy element 1(A) under his supervision within the 10 days prior to submission of the request, and (iv) the examiner's written signature. Examination papers will be forwarded only to the volunteer examiner.

(2) The volunteer examiner shall be responsible for the proper conduct and necessary supervision of the examination. Administration of the examination shall be in accordance with the instructions included with the examination papers.

(3) The examination papers, either completed or unopened in the event the examination is not taken, shall be returned by the volunteer examiner to the Commission's offices in Gettysburg, Pa., no later than 30 days after the date the papers are mailed by the Commission (the date of mailing is normally stamped by the Commission on the outside of the examination envelope).

(c) The code test required of an applicant for an amateur radio operator license, in accordance with the provisions of §§97.21 and 97.23 shall determine the applicant's ability to transmit by hand key (straight key or, if supplied by the applicant, any other type of hand operated key such as a semi-automatic or electronic key, but not a keyboard keyer) and to receive by ear, in plain language, messages in the International Morse Code at not less than the prescribed speed during a five minute test period. Each five characters shall be counted as one word. Each punctuation mark and numeral shall be counted as two characters.

(d) All written portions of the examinations for amateur operator privileges shall be completed by the applicant in legible handwriting or hand printing. Whenever the applicant's signature is required, his normal signature shall be used. Applicants unable to comply with these requirements, because of physical disability, may dictate their answers to the examination questions and the receiving code test. If the examination or any part thereof is dictated, the examiner shall certify the nature of the applicant's disability and the name and address of the person(s) taking and transcribing the applicant's dictation.

8. Section 97.29 is deleted and redesignated as reserved.

9. Section 97.31(a) is amended to read as follows:

§97.31 *Grading of examinations.*

(a) Code tests for sending and receiving are graded separately.

* * * * *

10. Section 97.33 is amended to read as follows:

§97.33 *Eligibility for re-examination.*

An applicant who fails a written examination for an amateur radio operator license may not take another written examination for the same or higher class license within 30 days.

11. Section 97.35 is deleted.

12. In Section 97.67 paragraph (a) is amended and (d) is added to read as follows:

§97.67 *Maximum authorized power.*

(a) Except for power restrictions as set forth in §97.61 and paragraph (d) below each amateur transmitter may be operated with a power input not exceeding one kilowatt to the plate circuit of the final amplifier stage of an amplifier oscillator transmitter or to the plate circuit of an oscillator transmitter. An amateur transmitter operating with a power input exceeding 900 Watts to the plate circuit shall provide means for accurately measuring the plate power input to the vacuum tube or tubes supplying power to the antenna.

* * * * *

(d) In the frequency bands 3700-3750 kHz, 7100-7150 kHz (7050-7075 kHz when the terrestrial location of the station is not within Region 2) 21,100-21,200 kHz, and 28,100-28,200 kHz, the maximum plate input power which may be utilized is 250 Watts.

Tracking the Hamburglar

ABDUCTED: Drake ML2 no. 11512. Xtals for 10 channels, green sub min. coax connected for T/T pad to coax conn BNC on rear, 1 coax sub min. connected to dev. terminals. Stolen March 26, 1976 in Andover, Massachusetts. Contact Frank S. Minas WA1MJI, 16 Cottage Street, Exeter NH 03833.

LIFTED: Genave GTX-1T handheld transceiver, s/n 13-07 stolen from our booth at the Dayton Hamfest. Contact Claude L. Henderson, Vice President, General Aviation Electronics, 4141 Kingman Drive, Indianapolis IN 46226, phone (317)-546-1111.

GONZO: Icom IC-230 2m FM transceiver, s/n 2406312, with all 5 West Coast split-split crystals. Inscribed on rear chassis: "CA DL #G516583" and "K6ICS". Contact Dr. Michael K. Gauthier, 9550 Gallatin Road, Downey CA 90240, (213)-923-0131.

RUSTLED: Icom IC230 two meter fm transceiver with mount and 82 xtal, s/n 2835. TPL Model 1002 two meter power amplifier, s/n 0426. Regency 10 channel scanner model ACTR 10HLU with all crystals and antenna junction box, s/n 185A88279. Stolen from the Mission Valley area of San Diego on May 17, 1976. If located, advise San Diego Police Dept, Burglary Div. at 236-6281 (case #76-33350), or contact Zane Sprague K6WK (714) 481-0594.

TAKEN: Unimetrics Ultra-Com 25, s/n 080213, stolen from locked auto parked in residence driveway, about 5 am, May 12, 1976. Unit enscribed in two places with N.C. driver's license number, 2067134. Contact Greensboro N.C. Police Dept., or W4DWR.

STOLEN: GTX-2 s/n 29-63 and ID no. 020-34-2737. GLH-100 and same ID no. Taken from my car on June 12, 1976. I am offering $100 for the recovery and conviction of the persons responsible for the theft. Paul F. Kelley K1UXD, 165 Garfield Avenue, Hyde Park MA 02136.

REMOVED: Icom IC-22A transceiver, s/n 1216, 16/76, 31/91, 01/61 xtals also in radio besides standard xtals from Icom. The radio also had a Motorola type microphone, instead of the standard Icom mike. Realistic PRO-11 Scanner, s/n 08370930, xtals for 155.79 and 155.685 MHz. Sanyo FT-867 AM/FM/8 trk in dash car radio, s/n 87661611. Realistic MPA-10 PA amplifier, manufacturer did not put s/n on unit, also non-stock microphone with it. These items were stolen from my auto parked outside my home on the night of August 21, 1975. I also had my name and SSN (214-68-9618) engraved on each unit. Please contact Stephen E. Martin WA3SAD, 12115 Northwood Drive, Upper Marlboro MD 20870 or at this phone number: 301-627-4933, or contact the Prince Georges County Police, Bowie, MD, case number 75-233-163.

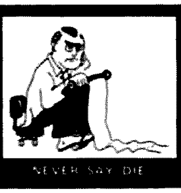

NEVER SAY DIE

...de W2NSD/1

EDITORIAL BY WAYNE GREEN

from page 6

techniques and modes . . . who are on Oscar . . . the moonbounce groups . . . there are a whole lot of heros in amateur radio and I take my hat off to them.

If we must for some reason have limits on bandwidth, I don't think they should be written to kill off those old buggers on AM or the television pioneers on 420 MHz . . . they should be written to encourage amateur development and pioneering. Do you agree?

If we are going to let the door open for new RTTY and RTTY/computer communications systems, we need to set things up with plenty of latitude for experimentation.

In docket 20777 the proposal was for 350 Hz bandwidth for the CW parts of the band. This would force all of the special modes such as RTTY, high speed CW, and FAX to be in the phone bands. Is this what we want to do?

Are we so jammed up on our bands that we have to set the phone band bandwidths at 3500 Hz? This would eliminate any experimenting with new systems which might allow for greater savings in terms of bandwidth/time. It would prohibit work with a synchronous detecting system of communications. It would prohibit work with double sideband systems where picture info is on one sideband and voice on the other.

Yes, there are times when every Hz of band is needed . . . Saturday and Sunday afternoons can be difficult. There are also many hours when even the most crowded of bands are virtually empty. Should we set the rules to meet the problems of Saturday afternoon and forget about the other times? Should we have our rules so they are designed to limit us for our own sake during the peak of the sunspot cycles . . . or should we ask for rules which allow us to work within the limitations of the bands in which we are working? A chap with a 25 kHz wide signal on 10m these days is not much of a problem to anyone . . . so why make a rule to stop him? It just might be that this idiot is working on a super narrow band television system.

The use of the bands is self-limiting. As they become more crowded, wider band signals will have to wait. This is something that sort of takes care of itself. We don't need stifling rules to force us to do these things.

Okay . . . again let us suppose that the FCC takes the lid off and says go ahead and use any width signals you want on any frequencies you want. What may happen? I suspect that without guidelines we would be in a pickle. Anarchy is not good either. Perhaps the FCC could say that we would no longer be bound by FCC regulations on bandwidths and subbands, but that they recommend we keep our present system until we are able to come up with a plan that we agree is better.

DUMP BANDWIDTH

I'm hoping you'll agree with me and write to the FCC asking that they not put through docket 20777. I'm hoping you'll ask them to get rid of limitations to experimenting and modes . . . even sub-bands. Oh, I guess we'd better keep the Novice bands, since the FCC is about to virtually throw them open to anyone who wants to give hamming a try.

Send your comments to the FCC, Washington DC 20554, and mention 20777. If you have a copier send the 15 copies . . . if not, send at least one . . . but *send.*

CONDITIONAL LICENSES DELETED

Johnny Johnston announced at Atlanta that on July 23rd the Conditional Class of license would be eliminated. Conditional Techs would be grandfathered into the regular Tech license and all other Conditionals would be grandfathered into the regular class of license.

Johnny admitted that only about 10% of the Conditionals called up are able to pass their test, but the prospect of trying to re-examine over 82,000 Conditionals was not pleasant. The FCC is just barely getting out of the mess caused by the flood of CB licenses and one thing they don't need is another big hassle.

To give an idea of what the Commission was up against with the CB licenses, Johnny showed some slides of their Gettysburg facility. About a year ago they would get one thin mailbag of license applications a day for all the services they handled. This has increased a bit and now runs over 80 mailbags a day on busy Mondays. They've been able to get permission to add a few temporary employees to help, but the whole thing is a madhouse.

To me this change means that all of us have to accept that we are now on equal terms with some chaps who have paid $100 for a General license or $10 for a Tech license and who don't even know the code. Okay, we have absolutely nothing to gain by bitching about it or making these chaps uncomfortable . . . they have enough of a problem living with their cheating, without our rubbing their noses in it. What we have to do is make sure that our clubs have darned good technical sessions and code classes so everyone in the hobby will learn and have more fun with amateur radio. The more you know about hamming, the more fun it is.

There is no indication that the code is going to be relaxed for the General Class and above tickets, so we can certainly do all we can to get every ham to pass the 13 wpm exam. It is now recognized that probably the worst possible way to try to get code speed is to start slow and gradually try and build up speed . . . say on the air. Johnny mentioned that this never worked for him either and that he got his code speed up by using tapes.

The *73* tape is only $3.95, so it isn't a big deal and can be used whenever the time permits. But it is more fun to get together with the club and have a short code copying session . . . probably about 20 minutes is right . . . as part of each meeting. It is vitally important to remember to keep code fun. As soon as you find yourself getting bored or fidgety, do something else. Keep the pressure off . . . take it easy . . . and have fun copying.

I'll try to get as many articles for *73* as I can which will help newcomers get the hang of radio theory. Authors please take note. If you've any experience in teaching at clubs, you'll reach a lot more people via articles in *73* . . . and the prestige of being published may make your audience listen a little more carefully.

My petition to permit Techs to use the Novice bands was part of this docket on the Conditional licenses. It is about time! And they made one other *big* change . . . Novices will be able to use 250 Watts input instead of 75. The reasoning was that Novices need to have good equipment to operate in their crowded bands, and this means buying a regular ham transceiver. Most of these have sweep tube finals and run in the 150-250 Watt range. So why not make that the power limit? And just to make it a bit more fair, *any* operator using the Novice band must keep his power to the 250 Watt limit.

COMMUNICATOR LICENSES

The FCC is still thinking seriously about the Communicator license, and they are now talking in terms of perhaps millions of them. They are not about to open this can of worms until they have a lot of other parts of their act going . . . like being able to handle the license applications.

The FCC is all tied up with problems on opening new channels for CB. There is a general agreement that CB needs more channels. I'm not convinced of this yet. I'd like to see a study of channel use. I think it would refute the more channel idea. They were just about to okay the channel increase when tests showed that two CBers 450 kHz apart in channels generated a good deal of intermod on the i-f and raised miseries on all channels of sets within several miles! Further tests indicated that signals on half the i-f frequency were also generating substantial intermod and that this might be responsible for quite a bit of the interference many CBers were getting. The FCC found that some CB sets were particularly dirty and it is certain that the Commission will be reviewing their type acceptance of several sets.

The FCC is well aware of the problems that sunspots and increased skip are going to make for them. The impact is going to be really serious when about seven million CBers discover that 23 over-powered stations in the midwest can wipe out much of the country. This means that the FCC has to get something going on a higher frequency band pretty soon. With the licensing mess they've had little time to do much else . . . except sweat. They know what is going to happen and they are so understaffed they are almost powerless to cope.

The Communicator license could be one thing to help get them off the spot. They can answer millions of screaming furious CBers with a simple ham ticket which will allow them to keep hamming away . . . on a band without skip . . . and legally. No code, darned little other exam . . . perhaps a short course with a local ham club which then can hand out the license.

I just wanted you to see what is happening and why. If you have any better ideas on what to do, let the FCC know . . . and me. The FCC hasn't time or people to read your letter, and neither do I . . . but I'll try . . . and they may too. Hey! Why not write to the ARRL . . . *they* have the time.

NO FUELING

Put on your blue sky thinking cap with me for a moment.

There has been a lot of PR given to a need for saving fuel. I don't think any of us really disagree with the fact that there is a problem . . . it's just that few of us are willing to voluntarily make big sacrifices in the name of fuel saving without some evidence that everyone else is hurting, too.

Now what do we spend a lot of gas on that could be saved? Well, I don't know about you, but trips to stores put a lot of mileage on my car. There are three or four trips to the supermarket a week, a couple to the hardware store, one or two to a department or discount store . . . several to the book/stationery store . . . things like that.

Add to my trips those of deliveries to my home . . . cleaning, UPS, mail . . . things like that.

Suppose some firm . . . perhaps UPS . . . got involved with a super delivery service which would bring mail, groceries, cleaning, hardware, Sears stuff, and everything else all at one time? Right there we could save over 50 million gallons of gasoline a day. Let's suppose that the delivery trucks, since they wouldn't have very far to drive, could be battery-powered . . . charged up overnight. Think of the pollution that would be eliminated . . . how much longer cars

would last without these unending short trips to the store . . . how much would be saved on insurance by keeping cars out of parking lot accidents.

Older folk will remember the time when most grocery shopping was done by telephone and the grocer delivered. Supermarkets killed this nice way of doing things . . . substituting a whole lot of your time in exchange for that of the delivery boy and the grocery clerk . . . plus your gas. Remember that most delivery boys used bicycles.

We can go back to the phone again . . . perhaps this time by way of the microcomputer which will give us pricing and buying information on all products and permit us to order them and pay at the same time via something like Master Charge.

Perhaps the time will come when most of our stuff will come by way of a daily (or twice daily) van . . . groceries, cleaning, mail, packages, drugs, Sears, hardware, liquor . . . ? The plan would seem to have enough economies in it to make it worthwhile to set up. And it would help in the energy crunch . . . and pollution problem . . . if the non-use of about 435 million barrels of gas a year is of any importance.

Until such time as small computers are in widespread use, it is unlikely that any serious computer-to-computer via phone lines system can be set up to get around our deteriorating and increasingly costly mail "service." But the one thing the post office has that has kept them in business despite their problems and cost has been a delivery service that reaches everywhere.

Suppose that my suggested delivery service were to get going . . . and were to catch on widely. It might be that it could be used by a "Western Union" type of outfit to deliver messages. On the other hand, with all those microcomputers out there for ordering merchandise and groceries . . . it might be that electronic mail would develop. Either way, such a system could serve that additional benefit . . . a fast and inexpensive mail service.

CBers

A letter from J. Henry Felton, who lists his calls as AA4HXZ-WR4AKX, says, "Wayne, what is that I see on page 46 of the July *73*? Bad news! Is *73* going 'CB'? If it takes ads like that to get 176 pages, then cut down to 120 pages. *73* has been the best since day one, you don't need CB ads. Let *CQ* have them!"

I expected a bit of flack on the CB ad, but really I expected a bit more than one letter . . . thanks J. Henry, for writing and giving me a chance to say something.

No, *73* is not going "CB." And while I would accept ads from Fredericks of Hollywood or Idaho potatoes to help pay for more space to print articles . . . every additional page of ads makes it possible to print about two or three pages of articles . . . I still won't permit ads from ham manufacturers selling bum products or providing lousy service. Not that CB ads are all that far out anyway.

If you have been reading my editorials for very long, you are quite aware that as situations change, my opinions change with them. I try to keep up to date and get all the input I can. A case in point is CB. A couple years ago you found me pretty sarcastic and negative about CB. I think that was appropriate at the time. Since then the situation has changed.

Two things happened. One was the sunspot minimum, which allowed 11m to settle down to a local band for a few years. The second was the national 55 mph speed limit. This combo got the truckers into CB and that got CB into the newspapers . . . and that got CB into the cars of several million people. Note that the CBers of today are rarely the CBers of two or five years ago. In most areas of the country bad language is a rare exception.

A great many amateurs are putting CB rigs in their cars and every one I've talked with is very enthusiastic about it. During my talk at Atlanta I asked for a show of hands of amateurs who were also using CB. Over a hundred hands went up. I then asked how many of them would be without it . . . only one hand went up. I know I wouldn't be without it. When I fly anywhere I take along both a ham rig for the repeaters and a CB rig for road information.

If you run up against a seriously anti-CB amateur, ask him the same question I would . . . has he used CB during the last year? You will never get a yes to that.

Before I go on with this, I'd like to just mention this 55 mph speed limit a bit. Unfortunately, most readers are not getting *Car and Driver*. I think that is a great magazine . . . not as great as it was a few years ago, but still great. I can't go into the details they do to show what a farce the whole 55 mph thing is . . . how much lower the accident rate is on the German Autobahns where there is *no* speed limit as compared to our interstates . . . etc. You probably find, as I do, that on the interstates most of the traffic moves along at 65 mph or so. Police, who might do better to follow up on CB reports of drunk or wild drivers, are manning radar speed traps . . . and drivers are countering with more CB and radar detectors.

Car and Driver figures that the next step will be radar jammers. Hmmm. I'm still hoping some enterprising ham will come along with a nice mobile rig for the 10 GHz ham band . . . a tenth Watt will do. That may make the radar people have to put in sharp filters to prevent adjacent band QRM from our rigs. A ham rig like that might sell like crazy.

Letters from ham clubs all around the country confirm that about 80% of the newcomers to amateur radio start out with CB. Wouldn't you, if you were getting going these days? Thus it ill behooves us to sneer at CBers. The chaps who are attracted to CB these days shouldn't be held responsible for the crimes of that bunch of clowns who terrorized the channels a few years ago. Now that the FCC is catching up with licenses and has an instant CB licensing scheme you'll even hear quite a lot of CBers using legitimate calls.

YOU CAN HELP

A few years back I wrote a column for *Electronics Illustrated*. It was a lot of work, but my mail showed that it was accomplishing what I wanted . . . attracting new blood to amateur radio.

In order to get my oar in the main stream . . . and for the same basic reason . . . I am now writing a syndicated CB column for newspapers. The column, called "CB Today," is aimed at educating the CBer and making him aware of amateur radio. I answer the questions CBers have, help them understand about antennas, car noise, the rules and things like that . . . but the end thrust is always to gently encourage them towards an amateur license.

The column has been accepted in 16 cities so far. If you see it in your local paper please send me a copy for my scrap book. If you don't, maybe you could call the editor and suggest that the column would be popular. I'll send samples and other info on it to anyone you suggest. My policy is that the column appear in only one paper in each area, so it is first come first served. If you happen to know the editor personally . . . lean on him.

The papers that are running the column report that it has helped them sell a lot of CB ads. Radio Shack stores in particular jump at the chance. The column is inexpensive and the ad revenue it brings papers pays for the column many times over.

Getting back to *73*. Perhaps you can understand why I was quite enthusiastic about the Standard ad for their Horizon 29 CB rig. I think that any amateur who is not on CB is missing fun . . . missing grand opportunities to talk up amateur radio and get a lot more newcomers to our hobby . . . and certainly is at a disadvantage in driving when he gets no warning of traffic tieups and accidents. Amateurs with FM rigs can report accidents, but they have to go some to beat CBers at this these days. And if you see a drunken driver you aren't going to be in direct touch with a police car unless you have CB. More and more smokeys are wearing ears these days . . . and the results have been good.

Yes, I know some CBers speed . . . so do non-CBers. But since the whole 55 mph thing involved gasoline problems . . . and I see that Detroit is again going more and more into floating boats for our highways which get half the mileage of my little bomb, even if I'm running it at 80 mph . . . perhaps it is time for reason to rule over emotions.

To recap . . . I welcome CB ads in *73* . . . CB is *fun* . . . write for copies of my "CB Today" column for your local paper . . . inventors, we need a radar detector test device . . . mercy me, how about that good buddy?

In case you are still hung up . . . we are getting about four times as many new hams today as a year ago . . . and almost 80% of these are CBers. Can I make it any clearer? Remember back to when you started as an amateur . . . where you met as a friend and buddy or as a lowly, to be sneered at, bum? I've found CBers today to be great people and very enthusiastic amateur newcomers. Extend your hand in friendship and help.

POLITICS AGAIN!

All you President Ford supporters out there should get your letter writing arm oiled up and working, for the White House is again mixing into our rain barrel. The Nixon White House was the big pressure which was pushing for the 220 MHz CB band, for those of you with short memories. Now the Ford White House is hot at it again and 220 is being pushed hard by the Ford group.

A few hundred letters from hams, friends of hams, families of hams, and anyone else you can get to write the Ford we may not like to have in our future can't hurt. If a few hundred letters come in showing Ford that he is losing votes by trying to force the FCC to take away part of a ham band for CB growth, it could have an effect.

Remember, please, that this was the origin of pressure which almost tipped the scales just before Nixon resigned. It would appear that EIA has an incredibly good friend on the White House staff somewhere high up. The FCC, under Chairman Wiley, has been dead set against taking ham frequencies for CB . . . so someone higher up than the FCC had to be bought or convinced.

There is no question that CB *must* have some UHF band if utter chaos (and that's the very best kind of chaos) is to be avoided in a couple of years. Even the White House can't stall off sunspots for much longer. Once those little rascals start burping out ions it will be bedlamsville on CB.

The FCC has been thinking more and more of something nice around 800 MHz. With synthesizers and the new module rf packages, this might be a good idea. It remains to be seen whether the FCC can get moving faster than the White House bunch.

THE SUPPORTING CAST

In response to rather persistent demands that we uncover the anonymity of our fearless crew, we present the first installment of our Kodak renditions of the troops. You asked for it.

Big Bill Edwards WB6BED/1, the ad manager of 73, has been with us for over two years and shows no sign of giving up one of the toughest jobs in the place. Note Bill hard at work. He must be doing something right since 73 has more pages of ads than any other ham magazine.

Meet Dotty Gibson, who has been managing the subscription department for over ten years. If you've called 73 at any time, the chances are you've talked with Dotty and she's helped you with your problem. Dotty is the one who undoes the screwups of our friendly computer down in Massachusetts.

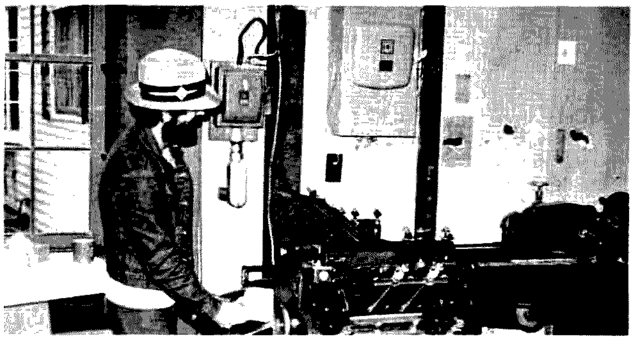

Brent Lawler runs the printing department at 73. The magazine is printed out in Wisconsin, but many of the books are printed in the 73 print shop . . . as are the subscription letters, forms, QSL cards, and things like that. It is enough to keep two men busy full time and then some.

Here is Bob Sawyer, who works in the 73 Magazine art department. Bob lays out most of the QSL card orders and a good many of the nice ads which 73 makes up for manufacturers who do not have advertising agencies.

Here's Judy Waterman, the lovely gal who runs the bulk sales end of things. The office used to be Wayne's a few years back and it was wall papered for his daughter Tully. Some things don't change too fast around the magazine.

Susan Philbrick does the layouts of the articles in 73 whenever she is not taking care of and supporting a bunch of horses and dogs.

I/O REPORT

from page 124

really think we're ignorant!", and "How can you guys stand this?"

Anyway, the other night our hero Steve Austin's mission was to intercept a shipment of sinister *microprocessors*!! As Oscar (his boss) explained it, "If these microprocessors are allowed into the country, they can be used to drain all of our defense computers." Luckily, the country was saved because Austin did get the can (coconut oil can) filled with those crafty, devious little devices and prevented them from falling into the wrong hands. Foreign microprocessors being smuggled into the country in coconut oil cans . . . my gosh, they must have been made on some subversive south sea island!

Miscellaneous

I was cleaning out my desk the other day and came across my old, and yet perfectly good, Post slide rule (in its nice leather case, even). I used to be able to do *everything* with this beauty. I think the fact that it is such a beautiful instrument is what bothered me the most . . . because I just couldn't bring myself to throw it away. I put it back in the desk (in the bottom drawer, way in the back) and I'll probably bring it out some day and show my grandchildren what we used before the hand-held computers came along.

We certainly want to encourage an exchange of ideas (no matter how far out) regarding computer applications in ham radio. So drop me a line if you come up with any . . . and we'll spread the word through the editorial pages or perhaps start a "Letters to the I/O Editor" section. Also, if anyone wants to set up a net to discuss computer applications, hardware, software, etc., send me the frequency and time and we'll be happy to publish them.

We're looking for good articles for the I/O section . . . and writing for *73* can not only be profitable, but quite gratifying. Earn a few extra dollars and at the same time share your ideas and efforts with others. If you have any ideas for articles, drop me a line and we'll talk about them.

LETTERS

from page 10

expensive), but you still need mag tape for data input/output and back up disk dumps. How do we get data printed? Programs loaded/bumped? Sure, some of these units are available to do our I/O, but at present they are 3 times the cost of the CPU and memory. I realize that I/O units are electro-mechanical devices and are expensive to make, but I feel the makers could do much better. Don't you?

Leon Howe WB0LIY
Sashiki-Son, Okinawa

Well, Leon, I just don't see what is wrong with an old (and cheap) Model 15 teletype for hard copy and one of the TVTs for soft copy. I find precious little that I want in hard copy . . . most RTTY contacts via computer and games don't require much of a permanent record. You will be encouraged to know that there are some fairly inexpensive hard copy devices coming, so hold tight — Wayne.

EGO INFLATION

Just a short note of praise to inflate your ego.

Last year with my subscription I got one of your 21+ wpm tapes and decided to go for the Extra when I got the time. I finished medical school two months ago and decided that it would be now or never with the Extra because I would not have the time during my internship. I ordered one of your Extra Class Study Guides and used it in conjunction with the ARRL License Manual and many other references. Your guide was so simple to comprehend that for the first time in my twelve years as a ham I feel I know some of the theory that I had heretofore memorized just for the sake of passing a test.

To make a long story short, I studied daily for one month using your 21+ wpm tape and Study Guide and passed the Extra on the first try last week.

I can't argue with success and sincerely thank the *73* staff for their study materials. Keep up the work.

Larry Smith, M.D. WA4YYU
Ellabell GA

OUT OF HARM'S WAY

Looks like the hamburglar has a lot of relatives. Business has been on the upswing for the last few weeks, but I am really saddened to say that it has been because of the increased activities of the hamburglar. We now receive calls every day we are open, from hams who have had their equipment stolen from their cars and homes. Today we had three cases, and yesterday two. As you know, I have had many losses myself, the most recent about two weeks ago while in a local restaurant. The police have arrested three suspects with one of the rigs stolen in that break, and although the suspects admitted having the other two rigs, they are out on the streets, will probably not be convicted of the break, and I will probably not have my equipment returned. My insurance agent did not seem too awfully surprised at all this, and it seems to be that the courts are just too busy with larger problems to bother with these cases.

I try to tell every customer who buys a rig not to leave it in his car; far too many come back the very next day to get a serial number for the police (never thought it could happen in a nice town like . . .).

I hope everyone who reads this will try to keep his rig out of harm's way. We need the business, but I sure hate to get it this way. By the way, Wayne, we will keep an eye out for your CB radio along with all the others.

Chuck Martin WA1KPS
Tufts Radio, Medford MA

KENWOOD GROUP

I wonder if I might have the temerity to request that something of interest to the HF bands be included in your mag, which I enjoy reading very much. I have recently formed a TS520 group here in ZL. It is primarily aimed at TS520 owners, with the idea of producing a monthly newsletter containing details of mods, accessories and general interest articles. However, the whole range of the Kenwood products can be included if enough interest is generated.

Anyway, I would be much obliged if you could either publish this letter, or a short notice somewhere in the *73* mag, bringing the attention of any Kenwood owners to the formation of the group, correspondence to be addressed to the address below.

George Halligan ZL2BJW
3 Petersens Road
Aokautere
R.D.1
Palmerston North
New Zealand

Ancient Aviator

from page 15

sold the line to Eastern Air Transport. Eastern asked me to stay on for two or three months to set up a new passenger ticketing and accounting procedure. This took almost three months, after which I joined Jim Eaton in New York to form an aeronautical consulting firm.

BOSTON AND MAINE AIRWAYS

One of our early jobs was for the Ludingtons in an attempt to interest the Boston and Maine RR in operating an airline over some of their routes. Nick Ludington agreed to back the project if our estimates could show a chance for breaking even or for a small profit. The B&M was interested but was only willing to subsidize the project at 30 cents per mile for each mile flown. Our estimates showed that we had to have a minimum of 35¢. So negotiations broke down. Note: A few months later Vidal, Collins and Earhart made the deal with the B&M and started the B&M Airline @ 30¢ per mile. This grew into Northeast Airlines, which was eventually sold to Eastern Airlines.

MARINE AIRLINES

The next project Jim Eaton and I worked on was an airline between New York and Boston, using amphibian airplanes. We proposed to land in the East River in New York and use a ramp that was already constructed at the Skyport at the foot of Wall Street. In Boston, we'd land at a city-owned South Boston pier or the Boston Airport. Equipment was to be two Sikorsky S-40 38 place amphibians.

We had the S-40s on order, I had passed $5000 under the table to get a pier lease from the city, and we had a public offering of our stock ready to hit the market, when Sikorsky advised us that Pan Am had "exercised an option" on the two S-40s and that no more would be available for eight months. I guess it only took a phone call from the President of the airline we would be competing with to the President of Pan Am to do the trick. This was in October, 1936. While Eaton and I were tearing up those nice new stock certificates of Marine Airlines, a phone call came in from Tommy Hitchcock, a partner in Lehman Bros. He said he had a new proposition that he wanted to see us about. Next month I'll tell you about it.

CONTESTS

from page 14

worked, and exchanges sent and received. Please number each new multiplier as worked. A summary sheet should be included showing your call-sign, name, address, number of QSOs on each band and mode, total number of QSOs, total multiplier (maximum of 58), claimed score, and whether the entry is single or multi-operator.

AWARDS:

Certificates will be awarded to the highest scoring station in each California county, state, province, and country. Second and third place awards may be made where justified. In addition, certificates also will be awarded to the highest scoring mobile station, portable station, multi-single, and multi-multi entries. A certificate will be awarded to the club submitting the highest aggregate score.

ENTRIES:

All entries must be sent to the NCCC, c/o Doug Docherty WA6DQM, 2306 Monserat Ave., Belmont CA 94002, and must be postmarked not later than October 31, 1976. A large, business size SASE is requested with each entry. All comments and suggestions will be appreciated.

FIRST CALL DISTRICT HAM OF THE YEAR AWARD 1976

The Federation of Eastern Massachusetts Amateur Radio Associations is now requesting nominations for the "Ham of the Year" award for 1976. Only amateurs in the first call district are eligible and the amateur selected will be the top "good neighbor" among hams, the one who has performed an outstanding public service.

Anyone may nominate an amateur radio operator for the honor. The winner of the award will be chosen for the amateur activity which brings the greatest benefit to an individual or group and for the amount of ingenuity and personal sacrifice displayed in performing the service.

Nominating letters should include the candidate's name, address, call letters, and a complete description of the service performed. Letters should be sent to the Chairman of the FEMARA Awards Committee, 28 Forest Ave., Swampscott MA 01907.

The winner will be presented with a plaque and a cash award at the ARRL New England Convention, Statler-Hilton Hotel, Boston MA, on September 11, 1976.

WHAT HAVE YOU MISSED?

The back issues of 73 are a gold mine of interesting articles . . . just take a look at what's been covered . . . every possible interest. This is the most important library you can have for hamming.

The supply of these back issues is very limited . . . and when these are gone, that will be it. Don't miss out by procrastinating.

Single issues . . . . $1 each (before 1976)
Ten back issues (your choice) . . . . . $12 postpaid in US.
Twenty-five back issues (your choice) $20 postpaid in US.
Twenty-five back issues (our choice) $10 postpaid in US.

JUNE 63. Surplus Issue. DMQ-2 Beacon Tx on 220, increasing ARC-2 transceiver selectivity, PE-97A pwr supply conversion, BC-348 band-spread, inductance tester, converting BC-230 tx, beginner's rx using BC-453, recvr motor-tuning, transistor cw monitor, BC-442 ant relay conversion, mobile loading coils, increasing Two-er selectivity, TV with the ART-26 tx, TRC-8 rx on 220, ARC-5 hf rx & tx, ARC-3 tx on 2M.

AUG 63. Battery-op 6M stn, diode noise gen, video modulation, magic T-R switch, ant gain, halo mods, cw breakin, VEE beam design, coax losses, RF wattmeter, TX Tube Guide, diode pwr supply, "Lunchbox" squelch, SWR explanation, vertical ant info, info on Windom ant.

OCT 63. WBFM transceiver ideas, HF propagation, cheap fone patch, remote-tuned Yagi, construction hints, ant coupler, $5 Vertical, filament xformer construction, 2M nuvistor converter, Lafayette HE-35 mods, Buyer's Guide to Rx & Tx, product detector, novel Hi-C VFO, radio astronomy, panadaptor "if" converter, compact mike amp.

FEB 64. 2M multichannel exciter, rx design ideas, majic t/r switch, loudspeaker enclosures, 40M 2W tx, look at test equipment, radio grounds, 40M ZL Special ant, neutralization.

MAY 67. Quad Issue: 432 Quad-quad-quad, expanded HF quad, Two el quad, miniquad, 40M quad, quad experiments, half-quad, three el quad, 20M quad, tiltover quad, easy-to-erect quad, Quad Bibliography, FET vfo, tube troubleshooting, HF dummy load, understanding "dB," HF SSB/cw rx, geometric circuit design, GSB-201 transceive, FET converter for 10-20M, hi-pass rx filters.

JULY 67. VE ham radio, VE0 hams, dsb adaptor, home brew tower, transistor design, '39 World's Fair, gnd plane ant, G4ZU beam, SSTV monitor, UHF FET preamps, IC "if" strip, vertical ant, VHF/UHF dipper, tower hints, scope monitoring, operating desk, S-Line crossband, hi-school ham club, Heath HR-10 mods.

OCT 67. HF solid state rx, rugged rotator, designing slug-tuned coils, FET converter, SSTV pix gen, VHF log-periodics, rotatable dipole, gamma-match cap, old-time dxing, modern dxing.

JUNE 68. Surplus Issue: Transformer tricks, BC-1206 rx, APS-13 ATV tx, low voltage dc supply, surplus scopes, FM rig commercial xtal types, Wilcox F-3 rx, restoring old equipment, 75A1 rx mods, TRA-19 on 432, freq counter uses, transceiver pwr supply, uses for cheap tape recorders, Surplus Conversion Bibliography, RT-209 walkie on 2M, ARC-1 guard rx, RTTY tx TU.

JULY 68. Wooden tower construction, tiltover towers, erecting a telephone pole, IC AF osc, "dB" explained, ham club tips (Part 1).

SEPT 68. Mobile vhf, 432 FET preamps, converting TV Tuners, xtal osc stability, parallel-Tee design, moonbounce rhombic, 6M xciter (corrections Jan 69), 6M transceiver (corrections Jan 69), 2M dsb amp, ham club tips (Part 3).

NOV 68. SSB xtal filters, solid state troubleshooting, IC freq counter (many errors & omissions), "cv" transformers, space comm odyssey, pulsar info, thin-wire ants, 40M transistor cw tx/rx, BC-348M double conversion, multifunction tester, copper wire specs, thermistor applications, hi-voltage transistor list, ham club tips (Part 5).

JAN 69. Suppressor compressor, HW-12 on 160, beam tuning, AC voltage control, 2M transistor tx, LC power reducer, spectrum analysis info, 6M transistor rx, operating console, RTTY autostart, calculating osc stability, lo-pwr 40 cw tx, sequential relay switching, sightless operator's bridge, ham club tips (Part 7).

FEB 69. SSTV camera mod for fast-scan, tri-band linear, selective af filter, unijunction transistor info, Nikola Tesla biography, mobile installation hints, extra-class license study (Part 1).

MAR 69. Surplus issue: TCS tx mods, cheap compressor/amp, RXZ calculations, transistor keyer, better balanced modulator, transistor oscillators, using blowers, halfwave feedline info, Surplus Conversion Bibliography, extra license study (Part 2).

APR 69. 2-channel scope amp, rx preamp, Two-er PTT, variable DC load, SWR bridge, 100 kHz marker gene, some transistor specs, SB-610 monitorscope mods, portable 6M AM tx, 2M converter, extra license study (Part 3).

MAY 69. 2M Turnstile, 2M Slot, rx attenuator, generator filter, short VEE, quad tuning, using antennascope, measuring ant gain, phone patch regs, SWR indicator, 160M short verticals, 15M antenna, HF propagation angles, FSK exciter, KW summy load, hi-power linear, extra license study (part 4), all-band curtain array.

JUNE 69. Microwave pwr generation, 6M ssb tx, 432-er tx/rx, 6M converter, 2M 5/8 wave whip, UHF tv tuners, ATV video modulator, UHF FET preamps, RTTY monitorscope, extra license study (part 5), building uhf cavities, mini-VEE for 10-20M, vhf vfo.

JULY 69. AM modulator, SSTV sig gen, 6M kw linear, 432 KW amp, 432-er tx/rx, 6M IC converter, radio-controlled models, RTTY IC TU, audio notch filter, VRC-19 conversion, tube substitution, 2M transistor xciter, extra license study (part 6), hf FET vfo.

AUG 69. FET regen for 3.5 MHz up, FM crystal switching, 5/8 wave vertical, introduction to ICs, RTTY tone gen, good/bad transistor checker, 2M AM tx, measure transistor Ft, 160M propagation, triac applications, simple IF sweep gen, transistor keyer, SB-100 on 6M, xtal freq measurement, extra license study (part 7), FM deviation meter, qrp am 6M tx, circular quads, FM noise figure, transistor parameter tracer.

SEPT 69. Tunnel diode theory, majic tee, soldering techniques, wave travel theory, cable shielding, transistor theory, AM noise limiter, AFSK gen, transistor amp debugging, measure meter resistance, diode-stack pwr supply, transistor testing, 2¼W 6M tx, HX-10 neutralizing, capacitor useage, radio propagation, AM mod percentage, extra class license study (part 8), 3-400Z linear, ATV vidicon camera, 2 transistor testers, FET compressor, rf plate choke.

OCT 69. Super gain 40M ant, FET chirper, telephone info, scope calibrator, thyrector surge protector, slower tuning rates, identify calibrator harmonics, FM adaptor for AM tx, CB sets on 6M, proportional control xtal oven, xtal filter installation, Q-multiplier, transceiver pwr supply, extra class study (part 9).

NOV 69. NCX-3 on 6M, IF notch filters, dial calibration, HW32A external VFO, 6M converter, feedline info, rf z-bridge, fm mobile hints, umbrella ant, 432-er tx (part 1), pwr supply tricks with diodes, transistor keyer, transistor bias design, xtal vhf sign gen, electronic variac, SB33 mods, extra class study (part 10), SB34 linear improvements.

DEC 69. Transistor-diode checker, dummy load/attenuator, tuned filter chokes, bandswitching Swan 250 & TV-2, 88mh selectivity, match exercizes, rtl xtal calibrator, transistor pa design, hv mobile p.s., 1-10 gHz freqmeter, CB rig on 6M, extra license study (part 11), 1970 buyer's guide.

JAN 70. Transceiver accessory unit, bench power supply, SSTV color method, base-tuned center-loaded ant, 6M bandpass filter, extra license study (part 12, rectifier diode useage, facsimile info.

FEB 70. 18-inch 15M dipole, 6M converter, high-density pc board, camper-mobile hints, 2M freq synthesizer, encoding/decoding for repeaters, DX-35 mods, panoramic vhf rx, variable-Z HF mobile mount, extra license study (part 13), linear IC info, qrp 40M tx, IC Q-multiplier.

MAR 70. Gdo applications, charger for drycells, FM freq meter, pc board construction, ham fm standards, cheap rf wattmeter, multifreq fm osc, "IF" system modules (part 1), Six-er mods, gdo dip lite, Motorola 41V conversion, cw monitor, buying surplus logic, SSO-23A sonobuoy conversion, GRC-9 rx/tx conversion, extra class study (part 14), intro to vhf fm.

APR 70. Noise blanker, 2M hotcarrier diode converter, repeater controller, understanding COR repeater, 7/8-wave 2M ant, extra class study (part 15), inexpensive semiconductors, renovating surplus meters, linear amp bias regulator, hi performance if amp & agc system, SSB bfo for shortwave radio, vacuum tube load box, general fm dope & repeater guide, meggering your ant.

MAY 70. Comments on "fm docket" #18803, future of cw, fm-am rx aligner, 5/8 wave verticals, using 2M intelligently, auto burglar alarms, pwr supplies from surplus components, "IF" system modules (part 2), vhf FET preamps, educated "idiot" lites, postage-stamp 6M tx, extra class study (part 16), Bishop (FNL low-band police monitor, mobile cw tx, Wichita auto-patch.

JUNE 70. DDRR ant, vfo circuit, remote SWR indicator, indoor hf vertical, two rx on one antenna, environment & coax loss, 2-el trap verticals, buying surplus, two 40M qrp tx, 21dB 2M beam, extra class study (part 17).

DEC 70. Solid-state vhf exciter, delta-fre control for SSB, 2M transistor FM tx, HW100 offset tuning, "little gate" dipper, 3-500Z hf linear, general class study (part 5), "transi-test" (no good – errors!), transistor p.s. current limiter.

JAN 71. Split fones for dxing, Heath Ten-er mods, cw duty cycle, repeater zero beater, HEP IC projects, 10-15-20M parabolic ideas, lightning protection, IC rx accessory, attic ants, double-balanced mixers, permanent marker tool, ham license study questions.

FEB 71. Metal locator, varactor theory, AFSK unit, SSTV patch box, ATV hints, RTTY tuning indicator, tone encoder/decoder, 220 MHz converter, SSTV magnetic deflection, IC code osc, 6M tx beeper, general class study (part 6), RTTY intro, perf-board terminal, low-ohmmeter.

MAR 71. IC audio filter, IC 6M converter, trap vertical ideas, digi counter info, surplus equipment identification, hf linear, simple fone patch, repeater audio mixer, digi RTTY accessories, coathanger gndplane, general class study (part 7).

APR 71. Intro to fm, noise blanker, repeater problems, Motorola HT mods, microwave repeater linking, digital ID unit, tuneable 2M fm rx/tx, repeater directory, fm marketplace, meter evaluator, varactor modulator, simple sig gen, touchtone hookup, hf preselector, 10M 12W tx.

MAY 71. 75M mobile whip, 2M preamp, transistor amp design, 10M dsb tx, portable fm transceiver directory, audio compressor-clipper, transistor LM freqmeter, 450 MHz link tx, simple af filter, 1-tube 2M transceiver, surplus 2M power amp, general class study (part 8)

JUNE 71. 2M beam experiments, 3 el 2M quad, multi-band dipole patterns, weather balloon vertical, pocket-pager squelch, two-er vfo, tuning mobile whips, transistor pwr supply, capacity decade box, 40M gain ant, general class study (part 9).

JULY 71. IC audio processor, audio sig gen, cw filter, 2M fm osc, 2M collinear vertical, FM supplier directory, Motorola G-strip conversion, transistor beta tester, general class study (part 10).

AUG 71. Ham facsimile (part 1), 500 Watt linear, dimensions for July collinear, 4-tube 80/40 station, vfo digi readout, Jupiter on 15M, general class study (part 11), pink ticket wavemeter.

SEPT 71. Transformerless power supplies, solid state tv camera, IC substitution, two rf watt meters, IC compressor-agc, multichannel HT-200, ham facsimile (part 2), causes of manmade noise, vfo with tracking mixer, general class study (part 12), transistor heat sinking, IC pulse gen, fone-patch isolation, hcd wattmeters.

OCT 71. Emergency repeater cor, transceiver power supply, predicting meteor showers, digi switching, reverse-current battery charger, passive repeaters, earth grounds, audio "tailoring" filters, Swan 350 mods.

NOV 71. 3-el 75M beam, motor-tuned gnd plane, 2M gain vertical, transistor biasing, split-site repeater, fox-hunting, audio filter, transistor/diode tester, xtal tester, 6M kw amp, 10-15-20M quad, transistor pi-net final, ant feedline, communications dbs, 2300 MHz exciter.

AUG 72. SSTV intro, speech processor, fm repeater info, test probe construction, GE progline ac supply, 432 rf testing, preamp compressor, Six-er mods, fone patch, Two-er info, solar info, SCR regulator for HVPS, "ideal" xtal osc, fm rx adaptor, auto theft alarm.

SEPT 72. Plumbicon tv camera, WWVB 60 kHz rx, cigartube sig gen, cw active filter, rf testing at 1296-3500 GHz, balun ant feed, transistor power supply, IC 6M rx, IC fm/am detector (part 2), active filter design (part 3), K2OAW freq counter (part 3), 2M freq synthesizer (part 1).

OCT 72. Corrections for Aug. fm rx adaptor, 2M freq synthesizer (part 2), 6M transistor vfo, nano-ampere meter, time-freq measurement (part 1), active filter design (part 4), repeater timer, extra-class Q&A (part 3), balloon vertical, ID gen, time delay relay, 432 filter ideas, DC-AC inverter, hc-diode converter, rtl decade and nixie driver, plus-minus supply for ICs.

NOV 72. Hf transistor power amps, RTTY selcal, IC trf rx, transistor keyer, emergency power, 220 MHz preamp, double-delta ant, simple converter using modules, hf RF tester, "lumped line" osc, 2M freq synthesizer (part 3), K2OAW counter errata, 2M preamp, extra class Q&A (part 4), hi-Z voltmeter, Nikola Tesla story, vhf swr meter, transistor regen rx, 432 SSB transverter, AC arc welder, intro to computers, hybrid am modulator, HR10 rx mods, 10M transistor am tx, 40M gndplane, IC logic demonstrator, overload protection, if/rf sweep generator, digi freq counter, aural tx tuning.

DEC 72. SSTV scope analyzer, 2M fm rx, tone burst encoder and decoder, universal if amp, autopatch hookup, LM380N info, voltage variable cap info, 2M 18 watt amp, SSB modulation monitor, xtal freq/activity meter, 10A var. dc supply, transmission line uses, radio astronomy, inductance meter, 75 to 20M transverter, LED info, 40M preamp, transistor vfo, 1972 index, 2M preamp.

JAN 73. HT-220 touchtone, 3-el 20M yagi, 50 MHz freq counter, speech processor, 2-tone gen, fm test set, tilt-over tower, 6M converter using modules, tuneable af filter, six band linear, 10M IF tuner, diode noise limiter, cw/ssb agc, HW22a transceiver 40M mod, HAL ID-1 mod.

FEB 73. CW id gen, tone operated relay, toroidal quadrature ant, active filter, time freq measurement (part 2), repeater timing control, SSTV circuits (part 1), 2M converter using modules, multifunction metering, FET biasing, freq counter preamp, TR22 hi-power mod, transistor rf power amps (part 1), light bulb rf power indicators, 75A4 filters, capacitance measurement, Gonset 201 mod, world time info.

APR 73. FM deviation meter, 2M FET preamp, two 2M power amps, repeater control (part 1), repeater licensing, European 2M fm, fm scanner adaptor, RCA CMU15 mods, lightning detector, cb alignment gadget, transistor rf power amps (part 2), repeater economics.

JUNE 73. 220 MHz sig gen, uhf power meter, repeater licensing info, RTTY autoswitch, 40M hybrid vfo tx, ant polar mount, 10-15-20M quad, K2OAW counter mods, double coax ant, ham summer job, tone decoder, field strength meter, nicad battery pack, ohm meter, FCC regs (part 1).

AUG 73. Log-periodics (part 1), tone burst gen, rf power amp design, transistor radio intercom, 160M ant, SSTV monitor, low cost freq counter, VOM design, qrp 40M tx, 432 MHz exciter, fm audio processing, FCC regs (part 3).

SEPT 73. Repeater control system, log-periodics (part 2), 2M rx calibrator, PLL ic applications, TT pad hookup, Heath HW7 "s" meter, Oscar-6 doppler, 2M coaxial ant, 2M converter, IC keyer, measure ant Z, FCC regs (part 4).

OCT 73. GE Pocketmate mods, microwave freq measurement, CA3102E 2M frontend, 2 kw hf linear, rf wattmeter, meter repair, 60/40 dipole, IC "hi" gen, vhf freq multiplier, FCC regs (part 5).

NOV 73. 450 MHz exciter, intro to ATV circuits, nicad voltage monitor, autopatch connections, IC meter amplifier, TR22 ac supply, indoor vertical, IC af filter, momentary power failure protection, 160M ant acoupler, Motorola HT info, SSTV ISB, Class-B af amp, FCC regs (part 6).

OEC 73. Code speed display, 2M kw amp, IC keyer, 8038 waveform gen, helical resonator design, sensitive rf voltmeter, proximity control switch, IC tester, sequential tone decoder, 2M portable beam, electronic calculator math, cw filter design, FCC regs (part 7).

FEB 74. SSTV monitor info, IC audio amps, scope sweep gen, 15/20M vertical, telephone line control system, pc board construction, var-Q af filter, blown-fuse indicator, 40m cw stn with Ten-Tec modules, simple preamp compressor, single-IC rx, "432-er" final assembly, transistor keying circuit, 7 segment readout with nixie driver.

APR 74. Vox for repeaters, tone-operated relay, hf transverter, 10-to-2m tx converter, remote control panel for scanner, RCA fm tx tuning, subaudible tone gen, FCC regs (part 9), Repeater Atlas.

MAY 74. Cd car ignition, audio compressor info, interference suppression for boats, auto burglar alarms, 2m ic preamp, 10m fet converter.

JULY 74. 4-1000A linear, universal freq gen, universal afsk gen, 555 IC timer, 80M phased array, 135 kHz-432 MHz preamps, 10M qrp am tx, 3000 vdc supply, how to read diagrams.

AUG 74. Toroidal directional wattmeters, 450 MHz FET preamp, use gdo to find "c", Trimline tt pad hookup, R390 & R392 rx mods, tracking cw filter, aural voltmeter, universal regulated supply, sstv scan converter, rtl logic problems, ID timer.

SEPT 74. MOSKEY electronic keyer (part 1), ex warning system, Heath 10-103 scope mods, qrp 6M am tx, rf speech clipper, audio noise limiter, wx satellite on SSTV monitor, universal IC tester, miniature rig construction, tower construction, infinite rf attenuator, electronic

(More)

73 READER SERVICE

Circle appropriate Reader Service # for desired company brochures, data sheets or catalogs and mail in to 73. Include your zip code, please. Send money directly to advertisers. * Reader Service inquiries not honored. *LIMIT: 25 requests.*

ADVERTISER INDEX

☐ *NEWSSTAND* ☐ *SUBSCRIPTION*

READER SERVICE
73 Inc., Peterborough NH 03458
SEPTEMBER 1976

Please print or type.

Name ____________ Call ______
Address ____________
City ____________
State ____________ Zip ______

Coupon expires in 60 days . . .

propagation

by
J. H. Nelson

EASTERN UNITED STATES TO:

GMT:	00	02	04	06	08	10	12	14	16	18	20	22
ALASKA	7A	7	7	7	3	3	3	7	7	7A	14	14
ARGENTINA	14	7A	7B	7	7	7	14	14	14	14	14A	14A
AUSTRALIA	14	7B	7B	7	7	3A	7	7	7	7B	14	14
CANAL ZONE	14	7	7	7	7	7	7A	14	14	14	14A	14
ENGLAND	7	7	7	7	7	7	7A	14	14	14	14	7
HAWAII	14	7B	7B	7	7	3B	7	7	14	14	14	14
INDIA	7	7	7B	7B	7B	7B	14	14	14	7	7	7
JAPAN	14	7B	7B	7	3B	3B	7	7	7	7	7	14
MEXICO	14	7	7	7	7	3	7	14	14	14	14	14
PHILIPPINES	14	7B	7B	7B	3B	3B	7	7	7A	7A	7B	14
PUERTO RICO	7	7	7	7	3	3	14	14	14	14	14	14
SOUTH AFRICA	7	7	7	7	7B	7A	14	14	14A	14A	14	14
U. S. S. R.	7	3	3	3A	3A	7	7	14	14	14	7	7
WEST COAST	14	7	7	7	7	3	7	7A	14	14	14	14

CENTRAL UNITED STATES TO:

GMT:	00	02	04	06	08	10	12	14	16	18	20	22
ALASKA	14	14	7	7	3	3	3	7	7	7A	14	14
ARGENTINA	14	14	7B	7	7	7	7	14	14	14	14A	14A
AUSTRALIA	14	14	7B	7B	7	7	7	7	7	7B	14	14
CANAL ZONE	14	7A	7	7	7	7	7A	14	14	14	14A	14A
ENGLAND	7	7	7	7	7	3A	7	14	14	14	14	7
HAWAII	14	14	7B	7	7	7	7	7	14	14	14	14
INDIA	7	7	7B	7B	3B	3B	7B	7	7A	7A	7	7
JAPAN	14	7B	7B	7	3B	3B	3B	7	7	7	7	14
MEXICO	14	7	7	7	7	3	7	7	14	14	14	14
PHILIPPINES	14	14	7B	7B	3B	3B	3B	7	7	7	7B	14
PUERTO RICO	14	7	7	7	7	3	7A	14	14	14	14	14A
SOUTH AFRICA	7	7	7	7	7B	7B	7A	14	14	14	14	14
U. S. S. R.	7	3	3	3	3	3B	7	7	14	14	7	7

WESTERN UNITED STATES TO:

GMT:	00	02	04	06	08	10	12	14	16	18	20	22
ALASKA	14	14	7	7	3	3	3	7	7	7	7A	7A
ARGENTINA	14	14	7B	7	7	7	7B	14	14	14	14A	14A
AUSTRALIA	14A	14A	14	7B	7	7	7	7	7	7B	14	14
CANAL ZONE	14	14	7	7	7	7	7	14	14	14	14	14A
ENGLAND	7	7	7	7	7	3B	3B	7	14	14	14B	7
HAWAII	14A	14	14	7	7	7	7	7	14	14	14	14
INDIA	7	14	7B	7B	3B	3B	3B	7	7	7	7	7
JAPAN	14	14	7A	7	3A	3A	3	7	7	7	7A	14
MEXICO	14	14	7	7	7	7	7	7	14	14	14	14
PHILIPPINES	14	14	14	7B	7B	7B	3B	7	7	7	7B	14
PUERTO RICO	14	7	7	7	7	3	7	14	14	14	14	14A
SOUTH AFRICA	7	7	7	7	7	3B	7B	7A	14	14	14	14
U. S. S. R.	7	3B	3	3	3	3B	3B	7	7A	7A	7	7
EAST COAST	14	7	7	7	7	3	7	7A	14	14	14	14

A = Next higher frequency also may be useful
B = Difficult circuit this period
N = Normal
U = Unsettled
D = Disturbed
F = Chance of solar flares

1976			SEPTEMBER			1976
SUN	MON	TUE	WED	THU	FRI	SAT
			1 N	2 N	3 N	4 N
5 U	6 U	7 U	8 U	9 N	10 N	11 N
12 U	13 U	14 D	15 U	16 N	17 N	18 U
19 N	20 N	21 N	22 U	23 U	24 D	25 N
26 N	27 N	28 N/F	29 D/F	30 D/F		

AMATEUR RADIO 73

OCTOBER 1976
$1.50

26 Feature Articles

- *RTTY*
- *Counters*
- *Hybrid Quad*
- *Quickie Collinears*
- *Weird Mobile Antenna*
- *And More!*

I/O

Microcomputer Hamming

73

#192 OCT 1976

COVER: Colored pencils on poster board, by John M. Murray W1BNN, Bloomfield CT.

73 Magazine is published monthly by 73, Inc., Peterborough NH 03458. Subscription rates in the U.S. and Canada are $10 for one year and $20 for three years. Outside the U.S. and Canada, add $2. Second class postage paid at Peterborough NH 03458 and at additional mailing offices. Phone: 603-924-3873. Microfilm edition — University Microfilms, Ann Arbor MI 48106. Tapes — Science for the Blind, 332 Rock Hill Rd, Bala Cynwyd PA 19904.

INCLUDE OLD ADDRESS AND ZIP CODE WITH ADDRESS CHANGE NOTIFICATION.

NEVER SAY DIE

...de W2NSD/1

EDITORIAL BY WAYNE GREEN

WAYNE ON WARCC

You've probably heard about the preparations which are being made for the coming ITU conference. Committees are already at work on proposals for more ham bands . . . etc.

You probably haven't heard a lot about what happened at the last ITU meeting when amateur radio lost virtually all (99.8%) of its satellite bands. That was when the biggest part of the future of amateur radio went down the tubes. Just imagine what we could do with amateur satellites using the 1215-1300 MHz band . . . the 2300-2450 MHz band . . . and all the other bands above two meters! Amateurs anywhere in the world could have talked with any other just as we do via two meter repeaters. All that is no longer possible . . . and never will be possible, for those bands are gone and cannot ever be regained.

Now why were those satellite bands lost? You probably know the answer as well as I do . . . they were lost because we did not make adequate preparations for the conference. Have we learned from this? Possibly . . . but I have not yet seen *any* sign of it.

Before I lay more on you, let me cite my qualifications briefly. Firstly, I was one of the official delegates to the last ITU plenipotentiary conference in 1959, so I have a fair idea of how the ITU works and how the delegates from various countries interact. Since then I have made it a point to visit quite a few countries and talk with the heads of telecommunications. I'm up to 86 countries visited so far. All of this has given me a fair idea of how the world fits together as far as amateur radio is concerned.

Okay . . . if we really want to protect amateur radio and come out of the next ITU conference without more tragic losses, what do we have to do? We only have to look at the report on the satellite frequency losses to get a strong clue . . . and it was exactly what I have recommended in my editorials in the past . . . we need a ham with a good deal of background and the ability to speak well to visit foreign countries and do two major things. Firstly, he should find out what emotional blocks there are against amateur radio . . . and what, if anything, he or U.S. amateurs can do to counter these blocks. It may be that one of our DXpeditioners has left his mark there. Some of them visited countries and promised all sorts of things . . . propagation studies . . . medical help . . . tourists . . . etc. Some told just about any lie they could to get a license and permission to operate for a few days. Things like this may take a lot of ingenuity to overcome.

Other countries are still furious over U.S. amateurs who have been permitted to operate and who ignored the local rules. Some made phone patches home even though they knew they were forbidden . . . others ran illegal high power . . . etc. It was unresolved problems like this that shot us down the last time.

The other thing we can do is make sure that every country in the world understands the immense value of amateur radio to them. This is a story that I've written too many times, so I won't rehash it here. There is hardly a greater gift we can offer a small country than a healthy amateur radio group.

Once some sort of rapport has been established with the telecommunications leader of a country we then will have an opportunity to point out the benefits to the country of backing amateur radio at the ITU. We will also have an opportunity to discuss any position the country may already be considering with regard to frequencies now amateur or proposed for amateurs . . . and we might be able to come up with good alternates and a list of benefits to them for going the alternate routes. *This* is preparation for a conference.

Sitting in on committee meetings in Washington is important too, for if you don't have the U.S. behind you, you're in a poor spot. But the U.S. has one vote . . . and so have each of the African and Asian countries . . . and *these* are the countries that are now running the ITU.

What are our WARCC people doing? Little has been said. What are they planning? Even less has been said about that. I have a feeling that the ARRL will come up with some vague appeal for funds to be donated to either them or a front organization . . . but will these be used for anything positive — or will they be wasted on fun trips for ARRL officials as in the past? A few of us remember that $100,000 fund which was set up for the protection of amateur bands many years ago . . . and we also remember that no accounting to the members has been made of the expenditures from this fund. My own questions about those mysterious expenditures have gone unanswered . . . except in undercover calls from ARRL Directors who knew what had been going on, but were afraid to say anything in public. Yes, we have our own little Watergates, right here in amateur radio. Perhaps it is time for the ARRL to come clean on these things and set up their books so such things can't happen again.

SUPER SPEED CW

A small group of amateurs have been loafing along in the 80-100 wpm range with CW. You may be able to hear them chirping away if you check 7035 and 14035 kHz evenings. They're using codetyping keyboards for sending and copying in their heads.

Yes, I know that the record was set in the '40s by Ted McElroy at 73 wpm, but that was hard copy. As a matter of fact, I used to watch Ted at hamfests demonstrating his skill — it was amazing to behold. The sound was almost like a continuous tone. Ted would start up his code recording and let it play for a bit, talking genially with watching amateurs, then he would sit down at his typewriter and flay away at it, catching up with what had already been sent, continuing his joking with the watchers as he typed.

With a little practice you can join the gang . . . maybe that will take a lot of practice.

One of the benefits of high speed CW vs. RTTY is that full break-in is normally used. It makes it a lot more like talking. A make-break RTTY system could be evolved which would permit this, but as far as I know it hasn't been done yet. There are enough benefits to frequency shift keying, so RTTYers are not likely to chuck it. Amateurs using microprocessors to generate CW could have a

Continued on page 108

BE MY GUEST

visiting views from around the globe

Lila Howard WA2JIO, receiving a message from Mr. Smith, the harbormaster at Oyster Bay, for transmission to one of the patrol craft.

Larry Stanecker WA2OLP, on the bridge of the Pajo II receiving messages from W2VL during the bicentennial celebration.

Tall Ships Are Tall Order

Friday, July 2, 1976, a day like most other days. Yet a day that would go down in history as one of the major events in a great nation's birthday party. It would also be a day where the abilities of the radio amateur to provide public service would be tested and found more than equal to the task.

The place? Oyster Bay, Nassau County, L.I., N.Y.

The cast? Thousands of visitors and tourists, hundreds of small boats, and six "Tall Ships."

The Mission? To provide radio communications for the harbor patrol, V.I.P. launches, harbormaster's office, and anyone else who needed to get a message from here to there.

The communications team? Dedicated members of the Long Island Mobile Amateur Radio Club (LIMARC)

Prior to the events of this day, the authorities at Oyster Bay, along with others involved in the upcoming "OPSAIL," were fully aware of the problems that could be created by this massive influx of people, boats, and planes, and the varied and sundry things that could be expected as an offshoot of the massive overcrowding of this relatively small area. Conferences were held between the port authorities and Duke Harrison K2OPF, and a game plan was set up wherein LIMARC would provide backup radio communications for all port operations. We were soon to find that "backup" communications can quickly become "primary" communications. The basic plan provided for a base station, located at the harbormaster's office, operating on 146.94/34 in the basic configuration of a repeater. Hand-held units operated by LIMARC members would be scattered about and located on the two V.I.P. docks, aboard the volunteer launches, and aboard the harbor patrol craft normally stationed in Oyster Bay Harbor. Police boats would rely on their own communications gear. Operations would commence at twelve noon on the second and end at midnight. Arrangements were also made with the Port Chester, N.Y., repeater group to keep their 34/94 machine off the air during this period. This was the only machine

that could cause local interference to the LIMARC operations, other than local operators using 94 direct.

Under the direction of K2LIO, a Station Master antenna was set up atop the harbormaster's office and two rigs were installed at a table on the shady side of the building. Commencing at twelve noon, W2VL (the LIMARC commemorative station) went on the air as the Oyster Bay command post station. Skillfully controlled by Lila WA2JIO, who was assisted by over twenty LIMARC members, the station began operating in earnest.

At first there was little to do – and then the deluge began. It appeared that the use of VHF marine radios in the harbor by the myriad small boats, all shouting at once, had rendered these channels totally useless.

CB radios located in the dockside office were also quickly jammed into a morass of 10-4s, 10-36s, 10-20s and Spaceman this is Beetle Buster. Our role as backup communications system had suddenly become that of being the only communications available. With consummate skill, Lila fielded the many calls coming from the launches and quickly set up an ordered net style pattern. With mounting rapidity, the messages came thick and fast: "Ice needed on the *Urania*" (her refrigeration had broken down); "Three crewmen from the *Magic Venture* to go ashore"; "There is a traffic jam of small boats near the Dutch ship *Eendracht*"; "Three V.I.P.s for a harbor tour at the northwest dock"; "Where is the captain of the *Urania*?" As these messages were coming in, the harbormaster had a constant flow of outgoing traffic for the patrol craft, the launches and the operators stationed at the docks. LIMARC members were riding around in Boston Whalers labeled "Harbor Patrol," luxury 28-32 foot skiffs, Bay constable cruisers, and anything else that could float. Out of this chaos came order and an orderly flow of traffic.

As a message handling exercise, it went off with textbook smoothness and great efficiency. As an example of amateur radio at work serving the public, there was no way that it could have been found wanting.

Without it, Oyster Bay harbor would have been a disordered maelstrom of boats, people and electronic noise.

It was best summed up by a harbor patrolman going off duty, who was asked by his replacement how the radios were working. "Well," he said, "the marine radio is no good and the CB is useless, but don't worry, the hams are here."

Harvey G. Hurwitz WA2HYS
Oceanside NY

Weisbaden Riding High

Having been together for more than a year, the Wiesbaden Amateur Radio Club from Wiesbaden, Germany, decided to do something different for a change. Having the usual club activities in high gear, we were in need of another unique activity to push new blood into this already solid and growing club. What better way than to go on a *DXpedition!*

The Wiesbaden Amateur Radio Club was formed over a year ago. It is comprised primarily of U.S. Air Force and U.S. Army personnel stationed in West Germany, along with several American, French, and German civilians. The club has a solid foundation, and although quite new at being a club, has successfully sponsored two hamfests among its other normal club activities. Perhaps it's the lure of adventure or perhaps it's the traveling blood in so many of us overseas, but we decided to partake of the excitement of being DX.

In order to get our feet wet in this new adventure, we arranged for a practice trip to the closest country available for a DXpedition – Luxembourg. The 3 hour drive to LX-land was a worthwhile trip, because we were able to learn many things pertaining to a DXpedition. Our U.S. Field Day experience sure came in handy, and we were then ready to embark to our primary target – Liechtenstein.

Gathering camping equipment, food, personnel, and radio equipment, the first group arrived for our weeklong activity on May 24. The station was set up in a campground near Triesen with a beautiful view of the Swiss Alps to the West. A 50 meter endfed Hertz antenna was strung from one tent to a convenient tree with the aid of the campground owner, who proved to be quite intrigued with our intentions. Then our pride and joy was raised – a 2 element triband quad beamed stateside on top of a 10 meter high portable mast. The campground owner seemed a little hesitant at helping with the quad. Perhaps the awesome size of the antenna proved to be a bit too much for his imagination. We all had our moments of wonder as to whether that beast would ever get off the ground, but we managed to get it flying just before dusk. And, not to let an opportunity slip away to do some serious VHF DXing from such a beautiful mountainside QTH, we erected a 32 element long yagi for 2 meters between a power pole and the quad mast. The rope boom was a cool 25 meters long.

Having the antenna farm in place, we busied ourselves with the equipment. Two HF stations were set up – an SB-102 and SB-200 combination and an HW-101 and SB-200 setup. For VHF we had a Multi-2000 and home brew 200 Watt amplifier for FM and SSB.

Throughout the week we enjoyed many exciting hours of operation. Many local Swiss and Austrian hams came to visit our location. One fellow even brought us a 430 MHz station including the antenna. With that we enjoyed working many stations in Switzerland, Germany, and Austria, thus making our band coverage complete from 3.5 through 430 MHz. We even attempted some Oscar work, but couldn't seem to hook up with the satellite. Next time we'll be ready for Oscar.

We managed to contact 3000 stations throughout the week. We were a little disappointed not to work more Stateside stations, but conditions weren't the best that week. Our VHF operation also proved exciting, as we were able to work stations as far away as Belgium on 2 meters. On several occasions we rolled up the 2 meter long yagi and went to the mountaintop for some truly magnificent VHF mountaintopping.

With the week rapidly drawing to a close, we dismantled HBØXAA to embark on our 8 hour journey northward to Wiesbaden. It was good to get back to a real bed and real food, but what an exciting time being on the other end of DX! We thoroughly enjoyed the operation and found almost all operators to be courteous, thereby enabling us to work many stations with a minimum of QRM.

What's in store next for the Wiesbaden Amateur Radio Club? We have a solid core of DX blood in the group and we are now deciding which DX spot to invade next. There will undoubtedly be a trip in late September to another rare QTH here in Europe. The Weisbaden Amateur Radio Club will ride again. We hope to hear you.

Terry L. Huston DA1TH/WA8RYC
Weisbaden, Germany

Standing, left to right: Jean DCØHO, Gerry WB5LVT/DA2BA, Carl WA1LHW/DA1TT, Tom DA1LV. Kneeling, left to right: Paul WA2VMS/DA2PG, Terry WA8RYC/DA1TH, Mike K8WVZ/DA1BM.

Autobiography of an Ancient Aviator

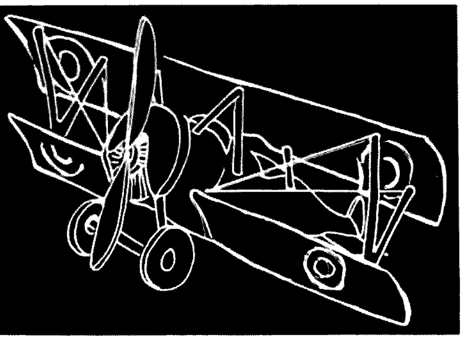

W. Sanger Green
1379 E. 15 Street
Brooklyn NY 11230

Here We Go Again

I told you last month about how, after years of hard work, Marine Airlines was quickly extinguished when the planes they were planning to use were "pulled out from under them." I also mentioned that Tommy Hitchcock, a partner in Lehman Brothers (bankers), had a situation he wanted to talk to Jim Eaton and myself about. Well, believe me, we wasted no time in getting over to Lehman Brothers to see what he had in mind.

It seems that Lehman Brothers had the controlling interest in the American Export Line, which operated steamships from New York to Mediterranean and Black Sea ports. In addition to some twenty-odd freighters, they operated four combination passenger and freight ships on a scheduled biweekly service to the more important ports. They called the latter the "Four Aces." Hitchcock's idea was that Export, with its well-established routes and connections with the countries touching on the Mediterranean, would be a fine vehicle with which to start and operate a transatlantic airline. Now, Tommy Hitchcock, as you may remember, was a top-notch polo player. One of his principal adversaries on the polo field was "Sonny" Whitney. Sonny was on the Pan American Airways board of directors. Although nothing was ever said on the subject, I have always thought that Hitchcock's enthusiasm with the American Export idea was partially due to his desire to have a go at Whitney in the airline business as well as on the polo field. Hitchcock himself was a good pilot, and owned and flew his own plane.

Talks with Hitchcock started about the first of November, 1936, and then gravitated to officials of American Export, William Coverdale, President, and John Slater, Vice President. Both were associated with the well-known New York engineering firm of Coverdale and Colpitts. All agreed that the days of volume transatlantic passenger transportation by boat were numbered, and, also, that although the "state of the art" had not yet produced aircraft capable of carrying an adequate payload over the transatlantic distances, it would not be too long before such equipment would be available. Export wanted to protect the passenger and light freight traffic on its Mediterranean routes by originating its own airline service. At that time, most American steamship companies were heavily subsidized by the federal government. Each had its own routes laid out by the Federal Maritime Commission. The U.S. Lines, for example, couldn't send ships into Mediterranean ports, and Export couldn't go to Cherbourg, Southampton or North Sea ports. So all their thinking was along the lines of their maritime routes.

Export intended to initiate its service by carrying passengers on the "Four Aces" between New York and the Azores (possibly Horta on Faial), and then to transport them on to the continent and Mediterranean destinations in large flying boats. The equipment for this service could be available in less than a year. The use of flying boats on the initial phase of the operation was made necessary because of the lack of adequate land planes and land plane airports in the Azores and around the Mediterranean. We all knew that, since there was very little difference in safety between flying boats and land planes when it came to a forced landing at sea, land planes would most likely be the ultimate vehicle for over-ocean travel.

Pan American Airways had been largely responsible for pushing American flying boat development. By mid-1936 they, and their associated air carriers, were operating scheduled services from Miami all through the Caribbean islands and around South America. They also flew from San Francisco to Hawaii and on to Manila. In addition, they operated routes in China and Alaska. For over-water routes they used Sikorsky S-42 and S-40 flying boats (32-39 seats) and Sikorsky S-38 and S-41 amphibians (7-22 seats); Ford tri-motors and Lockheed and Fairchild land planes were used in Alaska and over land.

At that time, the U.S. domestic airlines were flying Ford (tin geese), Fokker and Boeing trimotors. The new Douglas DC2 was just coming into use. All snails compared to the present-day jets. Douglas was working on the DC-3 for TWA and Boeing was starting on the development of its 314 flying boats for Pan Am. It took WW2 to speed up development of the four engine DC-4. These planes could make it across the North Atlantic to Northern Ireland by refueling at Gander (Newfoundland) and Reykjavik (Iceland).

Pan Am's ambition was to be the U.S. "chosen instrument" in international air commerce worldwide. They already had plans and equipment being designed for an around-the-world service. Quite an antagonist for American Export to take on. A few years later, after extended and bitterly contested hearings, the Civil Aeronautics Board perversely awarded Pan Am the routes sought by Export and gave Export the northerly route to England, Holland and the Scandinavian countries. More on this later.

My mission on this trip was to check on the availability of adequate flying boat facilities on American Export's route. I was instructed to confer only with Export and U.S. consular personnel and not with government or airline officials of any of the countries involved. Strictly tourist on the surface, camera and all.

After a couple of weeks discussion and briefing in New York, and before we quite realized what had happened, Eaton and I were scheduled to depart on November 24th on the *SS Excalibur* (flag ship of the "Four Aces") for a Mediterranean survey trip. Between conferences with the American Export people and putting Marine Airlines to bed, we had a very short time to update wardrobes, get shots, passports and visas.

Come sailing day, Cleo (my wife), my baggage and I arrived at Pier F, Jersey City, only to find that the poor downtrodden engine department was on strike for some nebulous reason. So we hauled everything back to Brooklyn. Evidently the deck and steward's departments didn't think the engineers had much of a beef, because on December 2nd the *Excalibur* finally set sail as a cargo-only vessel. Eaton and I were signed on as supercargoes. The Engine Department was made up of personnel on loan from various oil companies' ships. The Chief Engineer was fresh off a tugboat in Boston harbor. Since Eaton and I were the only passengers aboard, we were assigned the best cabins and got lots of service.

Everything went fine, good weather, etc., until the fifth day out. Then we started to get salt water in our showers and basins. Due to the engine crew's unfamiliarity with all the various valves, etc., most of our fresh water had been pumped overboard and the tanks filled with sea water. This resulted in corroding quite a few boiler tubes and causing leaks that put one boiler out of commission entirely. So they had to heave to, put out a sea anchor and spend two days replacing boiler tubes. This was no easy task, as only two of the borrowed engine crew were small enough to be able to crawl into the boilers to make repairs. We limped into Ponta Delgada and, after a couple of days of boiler refitting, we took on a supply of fresh water and sailed for Marseilles. I took advantage of the Ponta Delgada stop to go ashore and have a talk with our consul about our proposed operation. I could see that the Ponta Delgada harbor was not large or protected enough for our operation, so the consul suggested the Horta harbor on the island of Faial and furnished me with a detailed map of the islands.

When the *Excalibur* docked at Marseilles, Jim Eaton and I were taken before the U.S. consul, discharged from our supercargo duties and paid $1 each for our services. That was December 14th.

Budd & Co., the Export agents at Marseilles, got Eaton and I rail tickets to Nice for that afternoon. We stayed the night in Nice then went on to Genoa the next day. John Gehan, Export's Mediterranean V.P., met us at the station and settled us in at the Grand Miramare Hotel. This hotel was situated high on the hilly part of Genoa and had an excellent view of downtown Genoa and the harbor. The Miramare was a beautiful old hotel. It was built before the modern concept that every cubic foot must bring in its

Continued on page 15

CONTESTS

Editor:
Robert Baker WB2GFE
15 Windsor Dr.
Atco NJ 08004

Please note the change in my mailing address and callsign. I'm now permanently located in southern New Jersey at the address shown above. All contest material should be sent to that address, preferably at least three months before the scheduled event. We will also continue to list results received as space permits.

1976 RTTY ART CONTEST
Starts: October 1
Ends: November 30

All worldwide licensed radio amateurs and members of their immediate families are eligible to participate in this contest. Each entry must be originated by means of manual inputs to a teleprinter using a standard communications keyboard, and may be submitted only by the originator of the art, or by the amateur on behalf of a family member. Submitted art may be of any subject suitable for transmission via amateur radio, but preference will be given to bicentennial subjects. Entrants may submit any number of entries, but each entry must be given a short title. Tapes of entries shall be formatted to permit a reasonably short running time, and to be compatible with machines which do and do not downshift on space. Compatibility with machines that do not interchange the bell and apostrophe is not required. At least 3 functions must be used between each line (normally CR, LF, and LTRS). Each line of the art shall be limited to 72 characters maximum (including spaces), but overline shading is permitted. Prints must be in one single part with no splices. Tapes must be limited to a maximum running time of 40 minutes at 60 wpm for the art itself, exclusive of any other information on the tape. Each entry must have been transmitted for the first time via amateur radio after October 1, 1976, and must be accompanied by a confirmation of at least one receipt of its transmission, identifying the title of the art and the call letters of the receiving and transmitting stations. All confirmations must be in writing (not by RTTY transmission), and must have been obtained by the entrant from the receiving station. Entrants may obtain necessary transmission of their entry by any amateur radio station. The tape and prints of each entry shall carry the full name of the author, call letters of the submitting station, and mailing address. This information shall be both written upon a beginning leader of the tape and also punched in the tape to appear on the page copy when reproduced. Entrants must submit one 5-level paper tape and five prints of each entry, and by such submission agree that the tapes and prints may be used, duplicated, and published for any purpose. Tape, prints, and transmission confirmation information should be securely packaged and sent to: RTTY Art Contest, c/o Don Royer WA6PIR, 18765 Santa Isadora St., Fountain Valley CA 92708. Entries must be postmarked on or before November 30, 1976. Entries will not be acknowledged or returned. Winners will be announced as soon as possible after the closing date. It is suggested that paper tapes be wound tightly upon a hard core to prevent mail damage!

Entries will be judged on the originality of the author in selection of subject matter, on excellence of technique in producing the art and formatting the tape, on overall appearance of the art when viewed from a distance, on suitability for publication, and on the entrant's compliance with the rules. A committee of judges, made up from those amateurs who have exhibited an interest in RTTY art, will select 1st, 2nd, and 3rd places, as well as honorable mention winners. Winning entrants will receive a plaque for 1st place and certificates for 2nd, 3rd, and honorable mention. Winning entries will be published in the *RTTY Journal* and other amateur radio magazines. The decisions of the judges will be final.

CARTG WORLDWIDE RTTY DX CONTEST
Starts: 0200 GMT Saturday, October 2
Ends: 0200 GMT Monday, October 4

Not more than 30 hours of operation are permitted. Non-operating periods can be taken at any time during the contest, but a summary of times on/off must be submitted with scores. Use all amateur bands, 80 to 10 meters. The ARRL country list will be used for country status, with KL7, KH6, and VO being considered separate countries. Classifications include: single operator (single transmitter), multi-operator (single transmitter), and SWL printer. Individual operators of multi-operator stations may submit their logs singly instead of in the form of a group log.

EXCHANGE:

Message number, time in GMT, and zone.

SCORING:

All two-way RTTY QSOs with own zone count 2 points. All others will receive points listed in Zone Chart (same as last year's chart). Stations may not be contacted more than once on any band. Multipliers are number of different countries worked on each band including one's own country. Each US and Canadian district will be considered as a separate country. Final score is total QSO points times number of countries worked, times number of continents worked (6 maximum). A Canadian Bonus Point is added last — 100 points for each VE/VO contact on all bands.

ENTRIES:

Use separate log sheets for each band. Log sheets and zone charts are available for SASE or IRCs. Logs must be received before December 1st to qualify. Send logs, summary, and scores to: Canadian Amateur Radio Teletype Group, 85 Fifeshire Road, Willowdale, Ontario CANADA M2L 2G9. Many various plaques, medallions and certificates will be awarded!

VK/ZL/OCEANIA JUBILEE DX CONTEST
Phone
Starts: 1000 GMT Saturday October 2
Ends: 1000 GMT Sunday, October 3
CW
Starts: 1000 GMT Saturday, October 9
Ends 1000 GMT Sunday October 10

WIA and NZART invite all ama-

CALENDAR

Oct 1 - Nov 30	RTTY Art Contest
Oct 2 - 3	VK/ZL/Oceania Jubilee DX Contest — Phone
Oct 2 - 4	CARTG Worldwide RTTY DX Contest
Oct 8 - 10	CD Party — Phone
Oct 9 - 10	VK/ZL/Oceania Jubilee DX Contest — CW
Oct 10	RSGB 21-28 MHz Contest — Phone
Oct 16 - 17	RSGB 7 MHz Contest — CW
Oct 16 - 17	WADM Contest
Oct 16 - 18	CD Party — CW
Oct 17 - 18	Manitoba QSO Party
Oct 19 - 20	YL Anniversary Party — CW
Oct 30 - 31	CQ Worldwide DX Contest — Phone
Nov 5 - 8	IARS/CHC/FHC/HTH QSO Party
Nov 6 - 7	RSGB 7 MHz Contest — SSB
Nov 6 - 8	ARRL Sweepstakes — CW
Nov 9 - 10	YL Anniversary Party — Phone
Nov 13 - 14	European DX Contest — RTTY (see Sept. issue)
Nov 14	OK DX Contest
Nov 20 - 22	ARRL Sweepstakes — Phone
Nov 27 - 28	CQ Worldwide DX Contest — CW
Dec 4 - 5	ARRL 160 Meter Contest
Dec 11 - 12	ARRL 10 Meter Contest
Dec 31	Straight Key Night
Feb 19 - 20	YLRL YL-OM Contest — Phone
Mar 5 - 6	YLRL YL-OM Contest — CW

RESULTS

RESULTS OF THE 1975 MARTS SEANET WORLDWIDE DX CONTEST

Seanet Area Top Scorers —
Single band, single operator, Phone: 9VØSN — 188,421 points
Multi-band, single operator, Phone: 9VØSH — 530,784 points
Single band, single operator, CW: VS5PM — 14,418 points
Multi-band, single operator, CW: 9M2LN — 153,537 points

Outside Seanet Area Top Scorers —
Single band, single operator, Phone: LU2AFH — 4,293 points
Multi-band, single operator, Phone: IT9FKS — 5,400 points
Single band, single operator, CW: OH1QB — 609 points
Multi-band, single operator, CW: YZ4HA — 1,386 points

teurs to participate in the 1976 contest.

EXCHANGE:

RS(T) and consecutive serial number starting with 001.

SCORING:

For Oceania stations other than VK/ZL – score 2 points for each VK/ZL QSO on each band, 1 point for each QSO with the rest of the world on each band. For the rest of the world other than VK/ZL – score 2 points for each VK/ZL QSO and 1 point for each Oceania station QSO (other than VK/ZL) on each band. Final score is total QSO points multiplied by the sum of VK/ZL call areas worked on all bands. The same VK/ZL call area worked on different bands counts as separate multipliers!

AWARDS:

Attractive certificates will be awarded to each country (call area in USA, Japan, and USSR) on the following basis:

– Top scorer using all bands;
– Separate awards for phone and CW;
– Other certificates awarded depending on activity: 2nd, 3rd, and separate band awards.

ENTRIES:

Logs must show, in this order: date/time in GMT, callsign of station contacted, band, serial number sent and received. Underline each new VK/ZL call area contacted and make separate logs for each band used. Include a summary sheet showing callsign, name and address (block letters, please), details of equipment used, QSO points for each band, and total VK/ZL call areas worked on that band. Sign a declaration that all rules and regulations have been observed. All logs should be posted to be received before January 31, 1977. Send entries to: NZART Contest Manager, Box 489, Wellington, New Zealand, or NZART Contest Manager, 152 Lytton Road, Gisborne, New Zealand. Every log, even for only a few contacts, would be appreciated.

LISTENERS' SECTION:

A VK or ZL station only must be heard in QSO and the following details noted in the log – date/time in GMT, call of station heard (VK/ZL), callsign of station he is working, RS(T) of VK/ZL station heard, serial number sent by VK/ZL station, band, points. Scoring is on the same basis and the summary sheet should be included.

RSGB 21-28 MHZ CONTEST – PHONE
Contest period:
0700 to 1900 GMT,
October 10

Official rules were not received from England in time for this issue. However, last year's rules were as follows:

Work any British Isle station (G, GC, GD, GI, GM, GW) on 21 and 28 MHz only. The same station may be worked once on each band for QSO and multiplier credit. Use a separate log for each band. Entries are limited to single operators only.

EXCHANGE:

RS and progressive QSO number starting with 001.

SCORING:

Each QSO with a British Isle station counts 3 points. Multiply total QSO points from both bands by the sum of British Isle prefixes worked on each band for final score (GB does not count, giving a maximum of 36 prefixes on each band).

ENTRIES:

Logs should be sent to: D. J. Andrews G3MXJ, 18 Downsview Crescent, Uckfield, Sussex, ENGLAND.

WADM CONTEST
Starts: 1500 GMT Saturday,
October 16
Ends: 1500 GMT Sunday,
October 17

Use all bands between 80 and 10 meters on CW only. Stations outside DM call "CQ DM," while DM stations will call "CQ WADM."

EXCHANGE:

Stations outside DM send usual 6 digit number, RST and serial number starting with 001. DM stations will send a 5 digit number consisting of the RST and the number of their Kreiskenner.

SCORING:

Each station may be worked only once per band. Each completed QSO with a DM station counts 3 points, while incomplete QSOs or QSOs with log errors count 1 point. The multiplier is the total number of DM districts per band. The special stations (DM7, DM8 and DMØ) count for any missing district on the band on which they are worked. The maximum multiplier is 75. The DM districts are the last letter of the callsign (A through O). The final score is the sum of QSO points from all bands multiplied by the final multiplier.

ENTRIES:

Classifications: Single op stations all bands, multi-op stations all bands, and SWLs. Please use separate log sheets for each band and enclose a summary sheet showing the scoring and address. Logs must be sent not later than 30 days after the end of the contest period (postmarked) to: Radioclub of the GDR, DM Contest Manager DM2ATL, DDR 1055 Berlin, P.O. Box 30, German Democratic Republic. The decisions of the DM Contest Bureau are final and the right to change these rules is reserved.

AWARDS:

Certificates will be awarded. Applications for all DM awards (WADM, DMCA, DMDXC, DMKK) may be sent together with logs for the contest, but please use separate sheets for each award.

RSGB 7 MHZ CONTEST – CW
Starts: 1800 GMT Saturday,
October 16
Ends: 1800 GMT Sunday,
October 17

Again, official rules for this year's contest did not come in time for this issue, so the following are based on last year's rules. The contest is similar to the 21-28 MHz contest, except scoring is different.

EXCHANGE:

RS(T) and serial number starting with 001.

SCORING:

Score 50 points per BI QSO for non-European stations. An additional bonus of 20 points for each different British Isle country/number prefix worked is also available (36 maximum). NO BONUS FOR GB PREFIXES! Final score is total QSO and bonus points.

ENTRIES:

All entries should be mailed to: The HF Contests Committee, c/o John Bazley G3HCT, Brooklands, Ullenhall, Solihull, West Midlands, ENGLAND.

RESULTS

RESULTS OF THE 1976 BARTG RTTY CONTEST

Top 10 single operator stations –

I8AA	282,624 points
I1PYS	281,506 points
K4GMH	192,520 points
I5WT	177,054 points
DJ6JC	176,364 points
PY2CYK	166,680 points
IT9ZWS	166,584 points
WA3JTC/ZP5	149,400 points
W4CQI	133,480 points
HB9AVK	131,152 points

Top 3 multiple operator stations –

W1MX	156,240 points
SM6FUG	140,302 points
DL8VX	127,296 points

Top 4 shortwave listeners –

H. Ballenberger (DL)	133,632 points
R. Giarnello (I3)	116,480 points
Cech Lubos (OK2)	105,258 points
Paul Menadier (USA)	80,276 points

MANITOBA QSO PARTY
Starts: 0001 GMT Sunday,
October 17
Ends: 0300 GMT Monday,
October 18

The third Manitoba QSO Party is sponsored by the Amateur Radio Clubs of Manitoba. The same station may be worked on each band and mode. VE4 to VE4 and 2 meter simplex QSOs are also permitted.

EXCHANGE:

RS(T), name, and QTH-municipality.

SCORING:

Each QSO counts 1 point. VE4s multiply number of QSOs by the number of US states, VE provinces, and DX countries worked. All others multiply the number of QSOs times the number of Manitoba municipalities, local government districts, provincial parks, and forest reserves (134 maximum).

FREQUENCIES:

SSB – 3770, 3905, 7195, 7230, 14190, 14285, 21245, 21355, 28600; CW – 3705, 7105, 14065, 21205, 28205.

AWARDS:

Certificates for the highest score in each province, state, and country. Plaques for highest VE4 and out-of-province station. Additional plaques awarded if warranted.

ENTRIES:

Send log data and signed declaration to: Doug Bowles VE4QZ, 1104 First Street, Brandon, Manitoba, CANADA R7A 2Y4. Mailing deadline is November 12, 1976.

CQ WORLDWIDE DX CONTEST
Phone
Starts: 0000 GMT Saturday,
October 30
Ends: 2400 GMT Sunday,
October 31
CW
Starts: 0000 GMT Saturday,
November 27
Ends: 2400 GMT Sunday,
November 28

Rules should be the same as last year's contest, barring any unforeseen changes (please check the September issue of *CQ Magazine*). The basic idea is to work as many other amateurs around the world in as many zones and countries as possible. Use all bands, 160 to 10 meters – on specified mode only. Classes of competition include: single operator single band and all band, multi-operator (all band only) single transmitter or multi-transmitter.

EXCHANGE:

RS(T) and zone.

SCORING:

Score a multiplier of one for each different zone and each different country contacted on each band. Remember, stations are permitted to contact their own country and zone for multiplier credits – so don't forget to work other US stations! The *CQ*

Continued on page 46

LETTERS

PERSONALLY INVOLVED

I appreciate your acceptance of kudos and brickbats for suppliers of electronic gear. It affords an opportunity nowhere else available, to my knowledge, to report on one's personal experience in this area. The purchase of a major piece of gear with most hams takes place every few years; some suppliers, therefore, do not see the need for purchaser satisfaction as an inducement for subsequent sales, and only consider the sale at hand.

I welcome, therefore, this opportunity to praise the service and personal interest in my needs by one of your advertisers, Slep Electronics Co. My initial concern of dealing with a supplier outside of my geographic area was allayed by my feeling that Bill Slep was personally involved.

Andrew J. Bartilucci W2NKC
Garden City NY

ABOUT TIME

In conjunction with this 1976 bicentennial year I am working with the Maiden committee, who will plant a time capsule in Maiden, to be opened in the year 2076.

I want amateur radio to be part of this capsule. Please arrange to send me one copy of your July, 1976, *73 Magazine*. I would like, if possible, Wayne's autograph across the front cover. This will be part of the capsule contents which will be buried on the grounds of the Malden Government Center.

Mel Dunbrack W1BHD
Malden MA

Well, Mel, while I'm flattered, it is difficult for me to believe that anyone much is going to be around in 2076. — Wayne.

RESURRECTION

I'm sending this to you with the idea that it might help someone with a similar problem. I have a 12 year old pre-Novice friend named Brian. Brian secured a 1948 vintage Hallicrafters S-53 receiver for $10 (he'll mow my lawn three times and have it paid for). The S-53 was perfect in every way but one — it didn't talk. After a few minutes of troubleshooting we found a bad audio output transformer. A quick search of the junk box produced no audio output transformer (thought I had one somewhere), but I *did* find a 120 V/6.3 V filament transformer — hmmm, why not? I connected the 120 V side to the 6V6 output and the 6.3 V side to the speaker voice coil. Ta-Da, it worked! And the transformer even fit the same holes in the chassis. Mismatch? If there is any, it certainly doesn't affect the performance of the receiver by any noticeable degree.

So what do we have? A previously "dead" receiver brought back to life, an idea for a different "source" for audio output transformers, a happy boy (soon to be a Novice) who will soon be on the air for a $10 outlay (will loan him a transmitter). Now I ask you, can any CBer match this for sheer satisfaction?

Bob May WA4DBG
Jonesboro TN

ENOUGH TO PAY FOR IT

There is a newsletter, *Dr. Dobb's Journal of Computer Calisthentics and Orthodontia*, whose sole purpose is to find good software through cooperative efforts and put it in the public domain. Subscription: $10/year. Vol. 1 numbers 1 and 2 are probably still available; they contain a complete octal and symbolic listing for a Tiny BASIC interpreter for the 8080. If you do not object to not paying royalties, these could be your first software tapes (although they would probably object to your making a profit). The *Dr. Dobb's Journal* people — People's Computing Company, Menlo Park CA, are software types, I think, who probably have much to give to a group of hardware types such as yourselves. They are planning a disk operating system for a micro.

I like your magazine (enough to pay for it). I am a non-ham into personal computing. I would be happy to share my knowledge of systems and scientific programming with someone who can help me learn how to build and design my own system. Initial uses would be text editing — I am an academic type — and later super cheap graphics.

As an old-fashioned computer user (who would never mention DEC and IBM in the same breath), let me suggest a piece of hardware computer hobbyists really need, although they may not know it: a cassette tape recording system which can move forward or backward under computer control, and which can read forward or backward (and possibly write forward and backward). A tape recorder with these simple properties could store data in discrete blocks and read them rapidly and randomly — thus acting like a slow floppy disk. A floppy disk costs $1000 minimum — this cassette could cost $100-$200. My model for this tape is DECtape™ or LINKtape which can be used by mini and large computers *just like a disk*, only slower. You don't always have to start reading at the beginning of the tape to know where you are, so getting information is much quicker. This type of storage would allow sophisticated macroassemblers and compiler languages and real operating systems which would allow your computer to do what computers do best, more than one thing at the same time (would you believe writing one program while another is being assembled — that is easily within the speed capacity of micros right now!!). In addition, software for a block-structured tape medium could be trivially converted for a floppy disk system (perhaps even vice versa). Enough of my showing off my need for a computer text editor.

I wish you and your magazine the best of luck. I would be interested in writing for you if you think I might have something to say. Now that I've paid my money, don't stop with the computer oriented articles.

Bill Pearson
Pasadena CA

P.S. Computer Operations, Lanham Maryland 20801 sells a LINK tape for the PDP-11, LSI-11 and any 8 bit micro for $2k. Perhaps they could be convinced to make a kit for less, but the cassette idea is cheaper. If they can do it, you (we) can do it.

Love to have you write, but try to remember that I do not know what a macroassembler is, or block-structured tapes . . . and things like that. You'll have to bootstrap me to where I can understand what you are saying. — Wayne.

BRIGHTER DIGITS

Thank you so much for publishing "Behold The Giant Nixie Clock," by Jack Grimes W4LLR. I built it pretty much as per the article in your July issue, and it works just great! You wouldn't believe how many comments it has drawn from visitors in my lab.

I would like to make several suggestions that can result in much brighter digits. First, I built mine in a large metal box, so I had to use an isolation transformer. A transformer with a 6.3 volt and 125 volt secondary from a junked VTVM supplies the power. If you use this arrangement, you'll get over 170 volts B+, and brighter nixies. Also, I checked the transistors off the surplus boards on a Tektronix Curve Tracer, and found

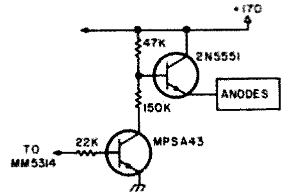

that the UL624 units could handle only 24 to 72 volts, so beware! None of my SA480 units were any good, and none of my substitutes worked well, so I subbed the accompanying circuit, which replaces Q8-Q13.

The 2N5551 transistor may be any 50 to 60 volt NPN unit; it only switches 40 volts. The Motorola MPS-A43 may be nearly any 180 volt switching transistor. Finally, I changed the 3000 pF cap to 0.015 uF. The results are far superior to the original circuit using those ancient (ugh!) transistors!

Gary McClellan
La Habra CA

FIRE ONE

Chalk up another -1 for Trigger Electronics. About 1 year ago I placed an order and sent along my charge card number. Somehow the prices on items ordered went up an average of nearly 30% since the date on the catalogue I had just received. Some items nearly doubled! One that doubled I sent back and purchased locally for about the original (reasonable) price.

Thanks for providing a forum in which we can sort out reputable mail order suppliers.

Harrison K. Clark WB2YKH
Clifton Park NY

WHY BUILD IN AN ERROR?

The "Instant Counter Calibration" in the August issue describes a procedure I have used for some time, and it works well. The frequencies printed, however, are slightly in error.

Color horizontal frequency was originally selected so that, divided into the 4.5 MHz intercarrier, an integer would result, 286 yielding the closest to the original 15,750 Hz. In order to interweave the sideband clusters' horizontal-rate multiples from both visual carrier and color subcarrier, the subcarrier is centered between integral multiples, i.e., 227.5 times line rate, or 15,734.26573, yields 3,579,545.455 Hz.

This is all well and good, but in practice, horizontal, as all other pulses, is derived from a subcarrier frequency source, which the FCC has *defined* as 3,579,545 ± 10 Hz. The network rubidium standards output this center frequency, so the ".455" does not exist. As a result, the actual horizontal rate is 15,734.26374 rather than your published 15,734.265. While .08 ppm may seem insignificant,

considering the potential accuracy of this reference, why build in an error?

Other notes: The old monochrome standard, using 15,750 Hz, is almost never used in broadcast stations. Any network program will be using color standard, regardless of program content. "Mini-cam" frequencies will be as accurate as other network sources if not a live pickup, as videotape machines will lock to the house standard, that being rubidium for networks. Even local programs will have sufficient frequency accuracy for most counters, as the FCC requires ± 10 Hz, or .000279%.

Dave Powell WA4BRI
Lexington KY

NO KEYER

I ordered 20 "recent" ('71-'75) back issues of your magazine. They made interesting reading. Boy, OM Wayne really gets nasty in some of his editorials. A friend who subscribes to your magazine and I found them enjoyable. I finally broke down and bought the June '76 issue in a radio store, and I couldn't pass up the three year subscription offer. I find the computer articles interesting, as I am a Navy data processing technician. Also found the "Glass Arm" article in the June issue enlightening, since I am a CW freak at heart and use a straight key in all my CW contacts. Adjusting the key as mentioned in the article really makes a difference. I might stick with my straight key and not even buy a keyer.

Martin S. Roe WBØJNV/KH6IOO
FPO San Francisco

THE HUMAN FACTOR

I am writing in reference to the clock article on page 70 of the July '76 issue of *73* describing a digital clock using Borroughs B7971 Nixie tube readouts. As a clock builder since the introduction of the MM5314 clock chip, I would like to call your attention to the following errors in the schematic diagram presented with this article:

1. Leave pin 1 (output enable pin) of the 5314 unconnected or connect it to pin 12. It is shown connected to ground/vdd, which will blank the display.

2. The capacitor labeled 3000 uF is a bit large for this application. This capacitor sets the multiplex frequency of the display, and should be 3000 pF (that is, smaller values of this capacitor *raise* the multiplex frequency — a 3000 mF as shown would blink slowly, *if it would work at all!*).

3. The emitter of transistor Q8 is not connected on the diagram. It should be connected to the emitter of Q9 (that is, the +150 volt supply line).

4. The SA480 transistor is a PNP type; your artist drew them as NPN types.

5. You might advise your readers that the pinouts for the MM5314 chip as shown on your diagram would be as you were looking from the bottom of the chip, and not from the top, as ICs are usually shown.

Mr. Grimes should be applauded for his excellent article, and, of course, his courage in experimenting with the "unknown" UL624s, and SA480s from the boards. The fact that no one knew how much these would stand has probably prevented the purchase of these board assemblies by a great many.

Gary Joe White WB9BUU
Pittsfied IL

Dear Gary Joe:

Your comments are appreciated. Some are correct, one not correct.

Two of the errors are my fault — as *73* simply copied my circuit and I was in error in copying my rough sketch.

These two errors are PNP transistors drawn as NPNs, and the lack of a connection on Q8 to the 150 V line.

Your no. 1 comment concerning pin 1 — look closely. It is *not* connected to ground. That is simply a tie point to connect pin 2 and the 100k resistor to vdd. There is *no* short connection over to pin 1. So this is no error, but one might have to look closely to realize there is no connection to pin 1.

My original sketch specified 3,000 mmfd (or pF) — which dates me as rather ancient to use mmfd. So this was probably an artist's error.

The schematic is drawn almost as the board is laid out.

I apologize for my part in the errors, but I guess that is the human factor.

Jack Grimes W4LLR
Memphis TN

FIRE TWO

I am writing to let you know of the troubles I have had ordering a Hy-Gain 18AVQ/WB vertical antenna from Trigger Electronics.

On December 12, 1975, I sent them a money order for $82.01 and received notice that they got my order. A month went by, so I wrote them and said either send the antenna within two weeks or return my money. A month later I received a postcard from "customer service" telling me I would receive my order within 4 weeks! Two months went by so I wrote again and begged them to return my money. A month later I got another postcard from "customer service" telling me to send back the card along with shipping instructions because *my order* was *in!* I sent back the card and again told them to return my money. I even wrote a letter to the owner, Irael Treger W9IVJ, but I have gotten no response. I am really mad now and am trying to get help from the Direct Mail Marketing Assn. and from "Mr. Fixit" of the Philadelphia *Evening Bulletin*. I wrote to you so you will not accept their advertising and for any possible help in this matter. I notice that Trigger used to advertise in *QST*. Thank you for your time and trouble and a very good magazine.

George Schmidt AA3NOY
Philadelphia PA

DRAMA

Send your most dramatic emergency ham experience for inclusion in my book, "Introduction to Ham Radio." Free copy if used.

Jerry Swank W8HXR
657 Willabar Drive
Washington Court House OH 43160

ONE OF THE BEST

I am not interested in ham radio, but do find *73 Magazine* has enough other material to be one of the best magazines.

Bill Trail
Guadalajara, Mexico

BOLT BELIEVER

J. K. Bach might, in reference to his article in the July, 1976, issue of *73*, like to have my corroboration of his statement that the diameter of a lightning bolt can be approximately eight inches.

Around 1940, I was working for Northwest Airlines as a radio operator, and was familiar with the evidence of lightning strikes on the aluminum shells of DC-3s. The metal was fused, in several cases, in about a 1/8" diameter circle, and the heated metal concentric to the fused spot was discolored out to the size of a quarter. In a freak incident, the aileron of a DC-3 in flight was in the path of a lightning bolt. The ailerons of a DC-3 are of linen, and the cloth had a hole approximately eight inches in diameter burned cleanly through it, with a very small ring of charring.

A picture was taken of the aileron by one of the mechanical crew at the Billings, Montana, service hangar, but it did not "turn out." So no record is available.

Kenneth G. Axvig W7EPL
Kremlin MT

TAKE MY ADVICE

For the past several years, I have been an avid ARRL supporter, and thought of *73 Magazine* as just a second rate magazine. Was I ever wrong! Our radio club subscribes to it, and I had a chance to read the club's copies of both *QST* and *73*. I have no choice but to subscribe to *73*.

Also, W8LWS was right. Don't build his world's smallest field strength meter. I didn't take his advice and went through a dozen of those 35mm film cans before I got one to work. The rf choke was $4.38 — the only part I didn't have in my junk box. It does look cute, but, *73* readers, wait for his next project. Take his advice, and mine.

Craig R. Schmidt WBØGFZ
Dickinson ND

NEW PROOFREADER

Well, I had better do it. I hereby request that you extend my present sub by an additional 3 years. I enclose a check for $17.76. Too bad I lacked the foresight (and the cash) to obtain a life subscription while they were only $37.00. Anyway, thanks for a tremendous magazine. (My dictionary defines *tremendous* as "huge, terrifying through great size or force" — close enough!)

In my article, "Build A Deluxe TTY Keyboard," published in the October and November/December 1975 issues, there are several errors. The basic keyboard described in Part I is OK, but the automatic function module in Part II contains some small errors and one large one. The following are the small errors:

1. Pin 2 of U213C should go to pin 8 of U213B, not pin 6.
2. Terminal A should go to pin 6 of U209, not pin 8.
3. U209 is a 74121.
4. There should be a 3.3 kΩ resistor in series with the base of Q203.
5. The diode connected to pin 13 of U213D must be reversed.
6. The 2 diodes connected to pin 4 of U203A must be reversed.

Now for the major error. The AFM (Fig. 2, Part II) connects to the wrong points in the basic keyboard (Fig. 5, Part I). In the basic keyboard schematic, terminals A and B are the connection points for AFM terminals 1 and 3 respectively. Well, that's wrong. Short terminals A and B permanently. Break the connection between U4A pin 5 and U7A pin 2. U214 contains a couple of spare inverters. One of those has to be used. Connect AFM terminal 1 to U4A pin 6. Connect AFM terminal 3 to U214 pin 9 (spare input). The output of that inverter (pin 8) should be connected to U7A pin 2. With the AFM connected this way, the serial input should be low when the keyboard register is empty (full of space coding).

As far as I know, that's it for errors. I'm sorry if anyone gave up on this project because of them. Next time I'll get a new proofreader for my author's proofs.

Bob Hart K7YGP/7
Medford OR

MICRO MAYDAY?

I am building an 8080-based microcomputer system, and would like to

get in touch with other hams who are also interested in microcomputers. With the growing interest in computers and computing among your readership, I feel that a small space in *73* devoted to getting us together would be appreciated by many — something like "Ham Help," but for we hams who are interested in computers.

Scott C. Crumpton WB4JTB
Gainesville FL

AIRPLANE! AIRPLANE!

Your July issue arrived June 8 and after finishing my evening munchies I turned to my favorite author, W. Sanger Green. Yes, I know, the period he writes about is for oldtimers. But then how many youngsters had the experience of everyone rushing out of their homes when the cry, "Airplane! Airplane!" was raised in the neighborhood. (Background noises were low in the '20s.) I've had the thrill of seeing the zeppelins floating south to a place called Lakehurst, N.J. Mr. W. Sanger Green is doing us a great service by recording the past and helping us to appreciate the progress made for our benefit in a few short decades.

Seeing his picture with Amelia Earhart gives one thought as to why offspring never seem to benefit from the handsomeness of their parents. My mother always insisted children tend to resemble their grandparents. Apparently, she was right.

I like the new magazine format. The change from 2m repeaters to minicomputers is fine, too, since I have neither. But, please, don't forget to include the simple construction articles. Not all of us have the time and facilities for the major projects. Still, the smell of hot rosin is preferred to aftershave lotion and lawnmower exhaust.

Joe Lisanis
West Caldwell NJ

I/O, I/O, IT'S OFF TO WORK . . .

I enjoy the I/O articles very much. I am a field engineer with Burroughs and I find that they supplement very well. Good magazine. Keep up the good work.

Tom Lawrence WB4QLW
Danville VA

MOSTLY BOURBON

Just a note of thanks for your "buy centennial" offer. I'm half Scotch, quarter English and the rest is mostly bourbon I think, but a bargain of this kind cannot be ignored, especially since I just borrowed a current copy at *QST* to find out what the cat left in the tuna can.

Only four — count 'em, 4 — articles that I can even remember being in the issue (I just looked at it yesterday), and acres of contest results and advertising. More ads, it seems to me, than *73*, and less magazine. That's nonprofit?

The point I'm getting to is that I personally value *73* highly as 1) entertainment, 2) instructive literature, 3) reference material, and, yes, 4) inspirational enough to get me off my duff to build things I can't buy because nobody makes it, and 5) knowing you get your feet muddy by not living in an ivory tower. As a comedian (Dave Gardner) once quipped when referring to a preacher's sermon on sin, "How's he know so much about that if he didn't ever?"

You and the gang keep up the good work and I'll be pushing up daisies before my subscription expires. Thanks again.

Chester C. Childs W5HVJ
Metairie LA

THE HUMAN TOUCH

Many thanks for running the article by Anthony Curtis K3RXK, "What's Up on 156 MHz?" in the July, 1976, *73*. It was very well done, and sure filled a gap that I have long been curious about. I am sure that the fleet will find the article very handy!

By the way, I have done business with one of your advertisers, and find that John Meshna is everything that a businessman should be. I just wish more people could be like him. He certainly handled my small business with the human touch. I ordered just a small bit under $10, but he was out of stock of the item . . . but he did have a set of bristol wrenches I wanted. He sent me the $10 back, and also sent the bristol wrenches! You can't beat that!

Howard Ragan K7ATU/DA4AU
APO NY

CIRCLING PATTERN

I very much appreciated the article by Chester Brent WB4GVE, entitled "Aim Your Beam Right" (*73*, June, 1976). Chester is to be congratulated for finding a workable, short solution to great circle computation problems, despite his self-confessed "rusty" math.

While the method presented should be quite OK for most U.S. amateurs, a few will not be fully satisfied. The choice of positive signs for *east* longitude and negative signs for *west* longitude was unfortunate for users of the HP-65 computer who are used to precisely the opposite usage of designators for east and west longitude (all NAV PAC programs standardize on positive values for *north* latitude and *west* longitude, and on negative values for *south* latitude and *east* longitude). Also, the symbol used by Mr. Brent for latitude (λ) is the one used almost universally for *longitude*. Latitude is generally abbreviated as Lat or simply L.

HP-65 Program Form

BEAM HEADINGS AND DISTANCES

SWITCH TO W/PRGM. PRESS [f] [PRGM] TO CLEAR MEMORY

Page 1 of 1

KEY ENTRY	CODE SHOWN	COMMENTS
DSP	21	
.	83	
1	01	
E	15	
STO 4	33 04	
g x⇄y	35 07	
E	15	
STO 2	33 02	
RTN	24	
LBL	23	
B	12	
E	15	
STO 3	33 03	
g x⇄y	35 07	
E	15	
STO 1	33 01	
f	31	
SIN	04	
RCL 2	34 02	
f	31	
SIN	04	
×	71	
RCL 1	34 01	
f	31	
COS	05	
RCL 2	34 02	
f	31	
COS	05	
×	71	
RCL 3	34 03	
RCL 4	34 04	
−	51	
STO 5	33 05	
f	31	
COS	05	
×	71	
+	61	
f^{-1}	32	
COS	05	
STO 6	33 06	
6	06	
0	00	
×	71	
STO 8	33 08	
RCL 1	34 01	
f	31	
SIN	04	
RCL 2	34 02	
f	31	
SIN	04	

KEY ENTRY	CODE SHOWN	COMMENTS
RCL 6	34 06	
f	31	
COS	05	
×	71	
−	51	
RCL 6	34 06	
f	31	
SIN	04	
÷	81	
RCL 2	34 02	
f	31	
COS	05	
÷	81	
f^{-1}	32	
COS	05	
RCL 5	34 05	
f	31	
SIN	04	
0	00	
g x>y	35 24	
GTO	22	
1	01	
3	03	
6	06	
0	00	
g R↑	35 09	
−	51	
STO 7	33 07	
RTN	24	
LBL	23	
1	01	
×	71	
+	61	
STO 7	33 07	
RTN	24	
LBL	23	
E	15	
f	31	
→D.MS	03	
EEX	43	
2	02	
÷	81	
f^{-1}	32	
→D.MS	03	
RTN	24	
LBL	23	
C	13	
RCL 8	34 08	
RTN	24	

REGISTERS

- R_1 Lat_2
- R_2 Lat_1
- R_3 λ_2
- R_4 λ_1
- R_5 $\lambda_2 - \lambda_1$
- R_6 D/60
- R_7 Beam Heading
- R_8 Distance (nautical miles)
- R_9 used

LABELS

A
B
C
D
E
0
1
2
3
4
5
6
7
8
9

FLAGS

1
2

For those readers having access to the HP-65, here is a simple modification of the Great Circle Navigation program (NAV 1-10A) which will compute the beam heading between any two points on the globe. With this version, you only need enter your QTH latitude and longitude once. As an added bonus, the program automatically calculates the distance in nautical miles between any two terrestrial points.

The program accompanies. To use it you merely:

1. Key in your location using standard DDMM.m notation as follows (assume your QTH is Chicago, 41°52' N, 87°38' W):

   4152 Enter 8738 A

2. Key in desired location, say, Perth (32°00' S 115°54' E):

   3200 CHS Enter 11554 CHS B

3. The HP-65 will automatically calculate and display the beam heading in true degrees (290.2°). If you then want to know the distance to Perth, simply press C and it will be immediately displayed (9531.4 nautical miles).

For new locations, begin at step 2 above.

William H. Trayfors WA6CCA
Katmandu, Nepal

SUB TIME

Thanks for a great magazine. I've been buying it at the local electronics store for almost a year, and decided that it's time to get a subscription. I especially enjoy your computer artjcles. I've been a computer programmer for about 10 years, and it seems that we get further away from the machine all the time. This is great for getting a particular job completed, but not as much fun. I'm in the process of trying to decide which micro to buy.

I'm also buying a set of your code tapes in hopes that they will help overcome the mental block I have against learning code. Been trying since the Boy Scouts, with no success.

Richard R. Zeh
Dayton OH

LITTLE BROTHERS GROW UP

Right on baby, right on! Your editorial in the July '76 issue was more on the mark than all the so-called sophisticated comments I've read in the past five years put together. I think you hit the nail right on the head. Nothing gets changed unless someone stands up and yells, loudly. It does little if any good to stand in a corner and mumble about the bad old "them." If you feel like you have been wronged, scream, at the top of your lungs. True, the odds may favor that you will turn out to be the voice in the wilderness, but at least you will have discharged part of your responsibility to our 200 year old experiment in individual liberty and self-determination.

My on again off again relationship with *73* is now about six years old. No, I'm not a ham. As much as I would love to be a part of the fraternity, the code has baffled me for the better part of twenty years. But, I still enjoy tuning in your world on my R-4C and sharing some of the amateur achievements via *73*, and, yes, even *QST*. As somewhat of an outside observer, it strikes me that amateur radio and its headstrong little brother CB really represent the essence of what our American experience is all about – the freedom of people who think to communicate freely. Certainly, we will frequently disagree (wouldn't it be a pity if we didn't), *but at least we can communicate*, which is more than ¾ of our brothers on this globe are allowed to do. Most people forget, or don't know, that most everywhere else in the world you need a license for a receiver, let alone a transmitter.

Enough of my soapbox. Keep it up, Wayne. You may not win, but hopefully you will keep a few people thinking. After all, that's what it's all about. By the way, those hams willing to key a mike on (heaven forbid) Children's Band might notice something unusual – if you give your callsign in addition to your "handle," more than likely you will get a legal callsign back. Even little brothers grow up.

Doug Shear
Arlington TX

SOFTWARE SUPPORT

It's actually your excellent I/O section that I'm subscribing for. *Byte* has not lived up to its promise, and you have the vision and imagination – evidenced by the July editorial on the future of the home computer – to expand the I/O section wonderfully. Count on me to support your plan to distribute software. I'm in the market for anything entertaining that will run on my IMSAI with George Morrow's cassette board and PTCo's video board and BASIC and 20+K of RAM and still growing.

In the meantime, I'd like to have a copy of your tape of Ed Roberts' interview. I want it for my archives, but if it will make you feel better I will gladly share it with the North Texas Computer Hobbyists Group, to which I belong.

Dan Wingren
Dallas TX

. . . AND AS WE ARE!

Enclosed are the proof sheets for my article (*Upcoming. – Ed.*). They look good to me. Sorry to be a little slow but I just got back in town. Of all things, I was in the northern mountains making radiation measurements on a mutilated cow. A real weird deal. Some thing that flew in a vehicle with tripod landing legs and that walked all over the place leaving four inch circular foot prints, removed the lips, ear, tongue, and rectum of the animal. All this was done without leaving any blood or signs of bleeding.

Also the vegetation wilted and died near where the legs of the vehicle rested. Sounds like I am cracking up but I was working with the New Mexico State Police and other officials. They are as confused as I am.

Howard Burgess W5WGF
Albuquerque NM

TO ERR IS HUMAN

Regarding my article in the July, 1976, issue of *73*, "Perfect CW – drive 'em crazy with the Keycoder I":

In the Parts List, I neglected to give the part number of the recommended Amidon Associates' toroids. It is FT-50-75 (price: 65¢ each). These are the ferrite (not powdered iron), high permeability cores needed for this project – some others we tried didn't work.

Also, in the schematic: R9 (1k), that feeds pin 2 of F/F 7, should be connected to +5 V dc, and the Vcc connection to IC2 (the monitor) should be labeled pin 8.

Yes, I know you sent me the galleys to check, but "to err is human," and I hope you'll be divine and forgive these oversights.

I've had 3 congratulatory letters on the article to date, from one of which I quote: "Thanks again for the fine article of the type which keeps me a current Wayne Green subscriber."

Bob Way WA9VGS
Hales Corners WI

SOMEDAY

Haven't got very far into minicomputers yet, but am reading all the articles and maybe I'll be inspired to buy a few chips and experiment. (The prices of the complete units are beyond my means and I'm sure beyond most hams' pockets – but they will come down someday.)

Henry Pattee W5POH
Mountain Home AR

C(W) URCHIN

You won't believe the popularity of your code tapes. On vacation, I encountered a street urchin in New York who could not live without your 5 wpm cartridge. He was in such a hurry that he took the tape recorder it was in, too. Oh, well . . . enclosed is a check for a new one. Tape, that is. Don't know what to do for a tape recorder yet.

John Duffield KØKHZ/5
Plano TX

Ancient Aviator

from page 8

share of the revenue. Everything – lobby, dining room, guest rooms, etc. – was spacious. Eaton and I each rattled around in a large two room suite. The only bad feature was that it was too far from the Export office to walk – particularly on the uphill return trip. When Cleo and I were in Genoa in 1963, I drove up to what had been the Miramare hoping to stay there, only to find that it was by then a convent.

A week was spent in Genoa conferring with Gehan and his staff. Eaton and I had to get used to slowing down our working speed to half throttle. The Export offices were in an old palace on the Via Garibaldi. The palace had no central heating, but it did have high vaulted ceilings that were painted hundreds of years ago with biblical scenes. The days went something like this: Get to the office about 9:30 am, out for a capuccino at 11:00, then to the Union Club at 13:00 for a few drinks, a game of dice and lunch (excellent food). Then back to the office at 15:00 and work until cocktail time (19:00). Dinner was usually around 21:00 at someone's home or at the "Buca di Santa Matteo," "Gambrini's," or another fine restaurant. Then possibly a few rubbers of bridge and we were ready to "hit the sack."

After much discussion about procedure, it was decided that I should take a look at the possibilities for flying boat operations at Marseilles, Algiers, Oran, Casablanca and Tangier. Jim Eaton was to go to Paris and confer with our ambassador regarding French landing rights possibilities, for survey flights. So on December 23rd I flew to Marseilles in an Ala Littoria Savoia-Marchetti twin-hulled flying boat. That afternoon I went to Algiers in an Air France flying boat. The next morning was spent with the Export agent and the U.S. consul. The Algiers harbor seemed to be OK for flying boat operations. That evening I caught the wagons-lits for Oran, about 250 miles away.

Very, very early Christmas morning I debarked from the train at Oran and checked in at a hotel to get some more sleep and freshen up a bit. After looking over the harbor and deciding it wasn't our "cup of tea" I dispensed with the formality of disturbing the agent's holiday. Instead, I treated myself to a very fine roast goose and liebfraumilch dinner and got the afternoon train for Casablanca (about 500 miles via Oujda, Fez, Meknes and Rabat). A very comfortable journey with good accommodations and service. Of course, there was the usual commotion at the frontier. All very polite.

Before leaving Genoa, John Gehan advised me to live at the Hotel Excelsior while in Casablanca, so I checked in there on my arrival. Since it was Saturday, I phoned Toledano & Son (Export agent in Casablanca) and told them I was in town and would be in to see them Monday morning. They were expecting me and invited me to tea on Sunday. They were a very nice family and I enjoyed several fine meals with them. I spent over a week based in Casablanca. The port was entirely inadequate for our purposes, so I got Joseph Toledano to drive me up to Port Lyautey (about 85 miles). On the way we made a courtesy call on the U.S. minister at Rabat to advise him of our plans. Port Lyautey provided the only adequate place for a large flying boat base on Morocco's Atlantic coast. Its disadvantage was its distance from Casablanca (85 miles) and Rabat (25 miles).

On January 4th I was ready to return to Genoa, so I phoned the Export agent at Tangier to see if any passenger ship for Marseilles or Genoa was sailing in the next few days. They had a Rotterdam-Lloyd ship, the *Indrapoera*, departing for Marseilles on the morning of the 6th on her way to the Dutch East Indies. I asked them to arrange space for me to Marseilles on the *Indrapoera*, and, since I was coming up to Tangier on the evening train, to reserve a room for me at the El Minza Palace Hotel. Quincy Stanton, our consul in Casablanca, gave me a "laissez-passer" to get me through Spanish Morocco. They were having a good-sized revolution going on in Spain at the time between Franco and the communists, and I didn't want to get caught with my passport down (no Spanish visa). It was lucky I had this document, for when we got to the frontier the train filled with armed soldiers. They not only checked passports, but also examined all luggage and personal papers. They spoke no English and I no Spanish, but they were plainly not happy about my passport. Something that the "laissez-passer" corrected. I still don't know which side those fellows were on.

In the morning, I called on U.S. Ambassador Blake and obtained advice from him and information of value from his abstracts and files. The afternoon I spent sightseeing. Next morning, I boarded the *Indrapoera* at 8:30 for the trip to Marseilles. On the evening of the 7th they had a big party aboard to celebrate the wedding of Princess Juliana of Holland to Prince Bernhard of Germany. We arrived at Marseilles at 10:30 on the 8th and I was back in Genoa before midnight on the chemin de fer.

Next month, to Egypt.

Looking West

Bill Pasternak WA6ITF
14725 Titus St. #4
Panorama City CA 91402

Many of you have asked how this column got started. Honestly, many times I have wondered this myself. Actually, the story is quite simple, and I hope it might be the kind of inducement necessary to get some of you interested in writing about the many diverse aspects of this wonderful world we call amateur radio.

"Looking West" began about three weeks before I left New York City in 1972. I had mentioned to Wayne that I would be driving cross-country, and the thought occurred to me that the seeds of an interesting article might be found in the fact that I was equipped for two meter FM. Anyway, about one month and three thousand miles later we arrived in the promised land, and I took out my notes about the trip and proceeded to write an article entitled, "Looking Back Ahead." To say the least – the very least – it was bad. After all, it had been exactly ten years since I had sat before a typewriter, that prior effort being a product review of the then-popular Clegg 99er six meter transceiver. At any rate, I do not blame old Never Say Die for turning down "LBA"; as I reread it now, I realize how lucky you all were to have been spared the agony.

Anyhow, earlier in 1972, *73*'s now long-gone *Repeater Bulletin* had carried an interesting article on Southern California FM by Bob Greenberg WB6INR. In fact, during August of '72 when I had ventured out here to seek employment, I had a chance to meet with Bob and his lovely wife Rene and learn a bit more about the Southern California FM community. Since Bob's article/letter had but scratched the surface of this interesting part of the nation, and being undaunted by my rejection notice on "LBA," I proceeded to write the first of what has since become a regular feature of this magazine: the only amateur radio FM column devoted to letting you know what's happening in this fascinating part of the country, with the technological advancements, the interesting people, and even the politics. This is all a part of the Southern California FM scene, a scene that I take great pride in being a part of, and even greater pride in sharing with you. Now, thanks to you, we are beginning to branch out a bit and are slowly getting into a position to bring you information of happenings elsewhere in the nation and the world. The column is finally developing into what I always hoped it would: a forum for developing lines of dialogue between amateurs of common interest everywhere. As I have said before, I consider "Looking West" your column. I may write it, but without you and your input the whole effort would be for naught. So thanks to all of you from a grateful writer, and I sincerely hope that in the future we will continue to serve you well. Now . . . on to DAYTON!

Ever flown on a Boeing 727? That's the aircraft with three engines mounted in the rear (one on either side, and the other as part of the tail just below the elevator assembly). Let me tell you, when that baby climbs out you know it . . . it's some moving machine. It was on such an aircraft that we departed New York's La Guardia Airport about 8:30 am for an hour or so breakfast flight to Dayton, Ohio. Two and a half hours later we were checked into our Holiday Inn. We hopped into the Avis rental for a nonstop trip to Dayton's Hara Arena, home of the 1976 Dayton Hamvention. (At this point I should digress for a moment and offer special thanks to TWA for a fantastic on-time flight, to Avis for having our rental car waiting promptly as we arrived, and to the folks at the downtown Dayton Holiday Inn for some good accommodations. I always hear people complain that big companies "don't really care." In my case, they sure did care, and this is a personal thank you to all three.)

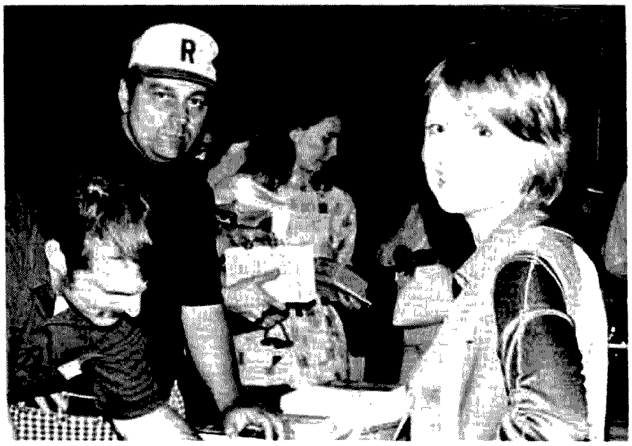

With a smile like Sherry Smythe's, how could anyone resist buying a sub?

While I have been to a good number of amateur conventions in my time, including the biggie in Las Vegas called SAROC, what greeted me at my arrival at the Hara Arena was almost hard to believe. (Please refer to the August aerial photo cover on *73* if you do not believe this report; it will more than substantiate it.) Acres upon acres of vehicles sporting amateur callsign plates and/or other identification that proved them a part of the amateur community were in attendance at this unbelievable gathering. I had heard many stories about the Hamvention, especially from my buddy Fred Deeg K6AEH, but until I saw it firsthand I really did not believe all that I had been told.

Somehow, Sharon and I made it to the ticket/information area, identified ourselves as being part of the *73* contingent and were given excellent directions as to where the booth was located and how to find it. About five minutes later we arrived and were quickly pressed into service. The place was a madhouse, with amateurs from all over the nation, and, as we found out later, all over the world, stopping by to say hello and buy subscriptions or other *73* goodies. To let you in on a secret, both Sharon and I were having the time of our lives. While it was work, for both of us it was a labor of love.

Since I had noted what seemed to be rain clouds moving in when we arrived, I excused myself for a while, and, after making the rounds to see the exhibits and say hello to many friends, I headed directly to the flea market, Bell & Howell Super 8 camera in hand. What I saw and also recorded on film was beyond my wildest imagination. If there were acres of autos in the parking area, there must have been as many acres of flea market. Standing as far away as I could and still be able to get an

W2NSD/1 eyeballs with WA2DHF.

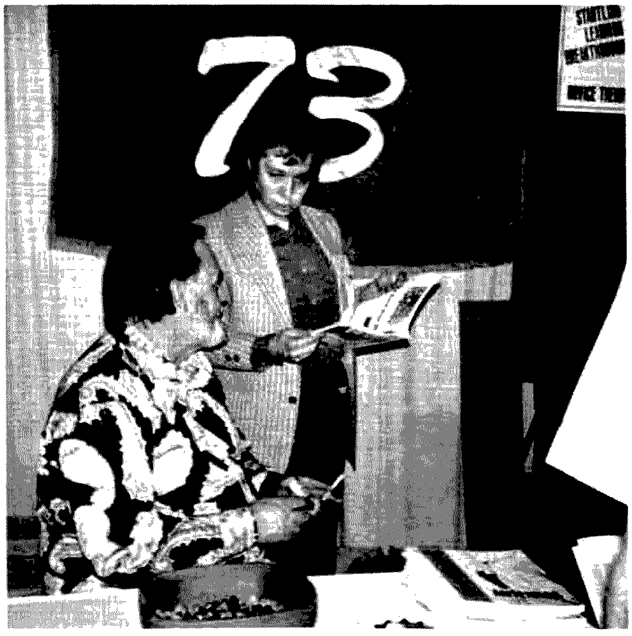

WA6ITF (standing) and Advertising Director Bill Edwards WB6BED/1 hold the fort.

Larry Moldauer WA2PZI drops by to say hello.

A familiar face at many conventions, Fred Deeg K6AEH takes a break by relaxing at the 73 booth.

unobstructed view, and with the camera set at full wide angle (approx. 9 mm), it was impossible to photograph the entire flea market without resorting to the well known slow pan shot. It was also impossible to cover the entire flea market in the few short hours I could devote to it. I suspect that I got to see about a third of it firsthand that day. My only regret was that I had spent almost all my bread in NYC on such "unimportant" things as clothing and the like. Here I stood in the middle of "ham heaven" without a paltry farthing in my pocket. There were many goodies I would have loved to have carried home aboard that L-1011, but maybe I was smart in letting my better half handle the financial aspects of our Dayton stay.

No sooner had I arrived back at the *73* booth than I heard, "So this is where you have been hiding!" I turned around to be greeted by Steve Mendelson WA2DHF, long-time friend and now Secretary of the newly-formed Tri-State Repeater Council serving New York and vicinity. Now, you might find this hard to believe, but somehow, even though I had spent the previous week in the big apple, Steve and I kept missing each other. Now, about 900 miles west, we finally got to eyeball. Steve eventually took off (after we had made a dinner date), and I got back to work, but only for a minute or two. Up walked one of our closest east coast friends, Larry Moldauer WA2PZI. I cannot tell you how long this friendship goes back. I guess I've known Larry ever since I've been a ham. It's one of the beautiful friendships that develop from amateur radio and last a lifetime. Larry and I have flown airplanes together, sold and swapped ham equipment over the years, attended each other's weddings, worked contests, and done probably everything else that two friends with common interests can involve themselves in. Since time in New York had been short, we had not been able to drive to Jersey to see Larry and Linda. The time we had to spend was all too short, but I did get a promise that he and Lin would be out to visit again this summer. For me, the best part of Dayton was that it was a chance to renew old friendships such as those with Steve and Larry, with a myriad of other old "SUR" people, and with many LIMARC members that I have known for years.

Yes, the southland was more than well represented. Many of the people that you have come to know through this column, such as Fred Deeg K6AEH, Capt. Dick McKay K6VGP, and "Uncle" Earl Surad WB6MUQ, to name but a few, passed by the booth to say hi. Dayton to me signified something very special: a mingling of the minds and hearts of amateurs from all over, on a face-to-face basis. I sincerely think that this, more than anything else, accounts for the success year after year of this event. Dayton is the "ham convention of conventions" and you have but to attend once to realize why. If I were never to attend another convention, at least I could say I was a part of the better than 12,000 amateurs who were Dayton 1976. God willing, I will be there next year.

Any of you repeater owners ever consider circular polarization for your system? This is being tried by one of the major Los Angeles open repeaters, WR6ABE. When the Stationmaster that normally serves the system was taken down from its perch 200 feet above Mt. Wilson, it was replaced with a specially-manufactured JAN-PRO circularly polarized broadcast type antenna cut for 146.40 MHz. While CP is quickly becoming a trend in FM broadcast radio, I am told that to date very little experimentation has been tried in the use of CP for two-way FM communication, and therefore little is known as to how well it might work in comparison with the now standard and widely accepted vertical polarization. Burt Weiner K6OQK decided that 'ABE might be an excellent testbed for such experimentation, and therefore went from a 9 dB gain antenna to a 3 dB loss antenna. While no final conclusions have been drawn yet, my personal observations might interest you.

Most noticeable are two things. First, before power was raised to compensate for the 3 dB loss, though the average signal strength of the system was down, I found myself hearing the repeater in places I had never heard it before. Not well many times, but it was there and that amazed me. The rapid flutter normally encountered in poorer areas had now become something akin to "low band" fade, due, I suspect, to the minimization of multipath loss. While what users term overall system sensitivity (the ability to burp the system from 20 megamiles past normal coverage area) was obviously lowered, you could now walk around your living room, HT in hand, without having to look for that one special spot from which to talk. You could also turn your hand-held sideways and not lose the system. So while users on the fringes may have suffered a bit, and while many a user gripes that he can no longer use 'ABE twenty miles past Podunk, by and large the CP experiment does seem to have a lot of merit. Much valuable information is currently being gathered, thanks to the inquisitive mind of Burt Weiner K6OQK, owner of WR6ABE. After all, is not this the kind of experimentation within amateur radio that has accounted for many advances in the

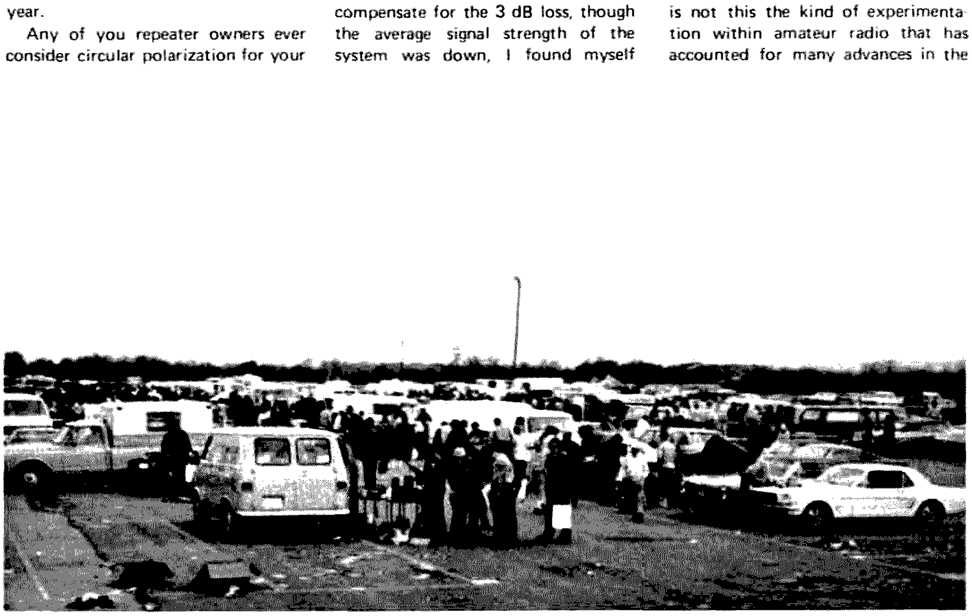

Acres and acres of flea market...

world of communication? Again, an amateur has proven that you can do more with a repeater than just talk over it. Who knows what advancement this, as well as the earlier WR6AJP CP experiments, will lead to?

In the meantime, if you are interested in working with CP or possibly have some ideas or experiences to share with Burt, he can be reached by dropping a note to Burt Weiner K6OQK, c/o The Mt. Wilson Repeater Association, PO Box 10193, Glendale CA 91209. I suspect that Burt would be interested in hearing your ideas.

While on the subject of WR6ABE, we regret to announce the temporary (we hope) discontinuance of the weekly bulletin service. After better than two years of uninterrupted service, Bob Sudock WB6FDF has found it necessary to step down from the position of producer-editor-narrator of this weekly service. Speaking for many amateurs, I know that Bob will be missed. The true professionalism that he brought to this service will be long remembered by many of us here and in other parts of the country where the bulletin service was taken by tape delay. While the search is on for a replacement for Bob so that the bulletin service can again resume, I for one feel that he will be a hard act to follow. Thank you, Bob, for a job well done.

On the topic of amateur radio bulletin services such as this, Bill KH6IAF recently returned from the Island State with word (and tape) that a very similar service had been instituted there. Using a format similar to Mt. Wilson's, and the facilities of the interlinked Hawaiian repeater system, amateurs there now have a chance to get up-to-the-minute information on things that concern them. Congratulations to the KH6s who have taken the initiative on this worthwhile project!

"Moving Up To Amateur Radio"

Once again, the expertise of filmmaker Dave Bell has brought forth a production of outstanding merit. However, unlike previous productions on the subject of amateur radio, "Moving Up To Amateur Radio" is the first such film that is intended for a non-amateur audience. It is an 11 minute experience designed to introduce the wonders of amateur radio to those who have in the past been exposed only to Citizens Band radio or to no form of two-way hobby radio at all.

NBC-TV News correspondent Roy Neal K6DUE is your host and guide. He starts by very tastefully comparing Citizens Band radio with amateur radio and explaining in the simplest of terms the differences between the two. He then takes the viewer further into the world of amateur radio by explaining how one goes about obtaining the necessary training to obtain an amateur ticket, and then on through a tour of the many diverse aspects that combine to make amateur radio one of the world's most interesting hobby services. The audience is allowed to glimpse such things as DXing, RTTY operation, slow scan TV, amateur satellite communication via the OSCAR satellites, and FM. The film ends with a two meter repeater QSO that truly epitomizes the fun of that aspect of amateur radio.

The main question is: "How well is the public going to respond to this film?" If my experience is any indication, I suspect that this vehicle by itself may bring many new members into the amateur radio community. Though the film was not intended for public school audiences, I had the opportunity the other day to make such a showing. Before screening the film, I asked the audience how many of them had an interest in amateur radio. The response was two hands rising above two young heads. We ran the film and again asked the same question. Now 16 students showed interest, and many expressed a desire to take the school's amateur radio training class. The film had done for this audience what it was hoped it would do for all audiences: act as the necessary catalyst for fostering interest in the world of amateur radio.

"Moving Up To Amateur Radio" may be the key that many of us have been looking for, the key that will unlock the door to growth within the amateur radio community. To that end I am happy to commend "Moving Up To Amateur Radio" to the non-amateur world – and especially to the members of the Citizens Radio Service. Through this film, those outside the amateur world can learn not only about us, but, also more important, how to become part of us.

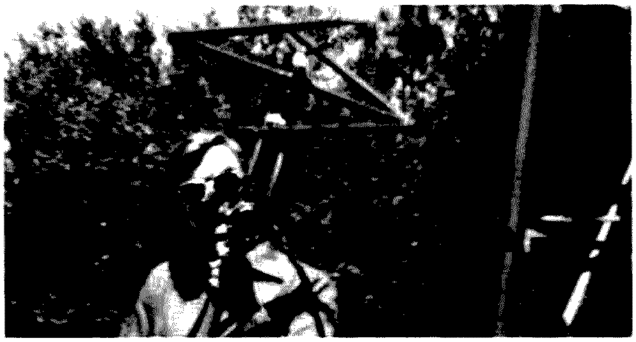

WR6ABE's new JAN-PRO circularly polarized antenna, prior to installation, is shown by Bob Thornberg WB6JPI. Photo by Jerry Sullivan WA6AMD.

Don Johnson W6AAQ
Wireless Hill
17943 Vierra Canyon
Salinas CA 93901

Build a Weird 2 Band Mobile Antenna

--fantastic parking lot car locater

If you have operated 75 and 40 mobile, you are well aware of the problem of stopping (on a freeway?) to switch resonators on your antenna only to wish you had stayed on the other frequency. Wouldn't it be great if you could switch bands even more conveniently than in your home station . . . no levers, switches, sliders or moving parts?

Here is an electronically switched multiband mobile antenna that can be built with the minimum of parts that are available at the corner home improvement discount house.

I had been anxious for a no-nonsense, non-mechanical multiband mobile antenna for years. The final straw, however, occurred somwhat suddenly one stormy afternoon away from home in our travel trailer. I was talking to a long-time friend across a couple of states and without warning he suggested we shift from 75 to 40 and "click" — he was gone. Normally this would not have been a big deal, but under the circumstances it was downright inconvenient.

This was in 1969, and almost the first person I saw after returning home was Walt W6IJA. He came to our place sporting a three band antenna on his mobile.

Walt had all three of his resonators, 75-40-20, mounted fan fashion on a single base section fed with a single feedline. It was so stupidly simple and practical that I had carbon copies installed on my car and travel trailer within hours. Using just about any resonators available, most of the mobiles in the area were multiband from then on. See Fig. 1.

Not All Roses

Even with the W6IJA multiband antenna, I kept looking for that better mousetrap. Along the way there were plenty of failures. One that I think worth mentioning was what I thought was my greatest pride and joy.

By early 1971 I had a dual bander that looked just like a monobander going down the road. Simply, it was constructed with two insulated top whips laid side by side and held together with shrink tubing. One whip was attached to the top of the coil for 75 and the other brought down to a point where it would resonate on 40 meters (see Fig. 2).

The rig used was a small low powered 75-40 SSB transceiver. The antenna was used mobile for over six months and I was so convinced "this was it" that I submitted a patent disclosure.

Then one weekend I shifted it over to another vehicle with a higher powered rig. After the second syllable — nothing — complete failure. Looking outside toward the antenna, I saw a neat little smoke ring drifting across the canyon! Inspection revealed that the whips had arced through the insulation and they were shorted together at the center. Every type of available insulation was tried, but anytime anything but the little rig was tried . . . fireworks! Back to slaving over a hot soldering iron.

Mother of Invention

Then there was the time I completely demolished my W6IJA dual band antenna with no spare parts for miles around. I did salvage enough

for a 75 meter resonator and a couple of top whips, and I was going to be content to get out and short out a few turns to get on 40.

The more I thought of this the less I liked it, having been spoiled by the dual band convenience, so I haywired together a modified version of the earlier "Ol' Smokey." See Fig. 3.

This worked the very first try, and the antenna noise bridge indicated a good match to the 50 Ohm coax on both bands using the old tried and true "Z" match at the base. A surprise bonus was several dB gain in signal strength over the monobanders.

Within a few months this model was cleaned up mechanically, using easy to obtain parts and far fewer of them. Also, the current model described in this article is a little easier on the eye. With a large number of them on the road for the past few years, it has exceeded all expectations. Mechanically it is rugged – none has been reported broken. It has been operated thousands of miles in ice, snow, mud, rain, hot and cold. Everyone has been pleasantly surprised with the performance.

During six months in 1975 the XYL and I traveled 15,000 miles to the four corners of the United States and we never missed our daily 75 meter schedule to the home base in California. Time, 1900 PST; frequency, 3830; rig, TR-3 with the big DK antenna.

No, This Is Not a Broadband Antenna

It may be redundant, but I have to repeat that, like any other good HF mobile antenna, this is not a broadband device. In my travels to clubs last year this was usually the first question that was asked. This appears to be a point that has eluded even a lot of the old-timers. Maybe it is just wishful thinking.

When you are messing with a high Q HF mobile antenna, twiddling the transmitter knobs will not make the antenna work any better. The antenna must be resonant and then matched to the feedline. The more abbreviated the antenna is in relation to the wavelength, the less the usable bandwidth. That's just the way it is! See Fig. 4.

For some of the hard to convince, I have tuned and matched their transmitters to good fifty Ohm dummy loads and then switched it over to the antenna to prove that twisting the transmitter knobs wasn't the secret to get the antenna to take the load. As a matter of fact, this is a very acceptable way to match your antenna to transmitter and feedline. Just switch off from the dummy load and then do all the adjusting to the antenna system to obtain maximum output. The big DK as shown will present a 50 Ohm load at the base on both 75 and 40. The swr will be less than 1.1 to 1.

Preparing the Coil Form

The loading coil is wound on a nineteen inch piece of one inch, schedule 40 PVC pipe. The 1" is the inside dimension. It's a little over an inch and a quarter on the outside. You should be able to bum this much pipe out of your friendly plumber's scrap box. When you cut off the ends, use a pipe cutter if possible to be sure they are square. Don't use too much pressure and crowd the cutter.

With a straightedge, lay a line the full length of the pipe along one side. Measuring from the bottom end, accurately mark points at 1", at 7

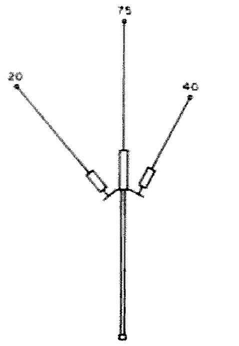

Fig. 1. The 1969 W6IJA special.

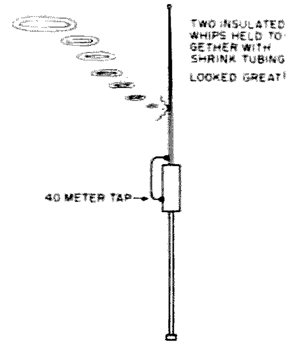

Fig. 2. Ol' Smokey.

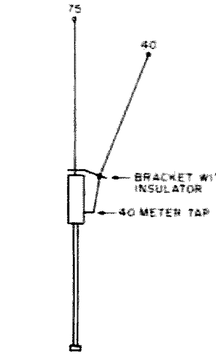

Fig. 3. The 1972 impromptu dual bander.

1/8" and at 17 5/8". Use a number 30 drill and drill holes through the side of the pipe at these points. At the 1" mark only, drill on through both sides of the pipe (see Fig. 5).

The next step is to install the bottom plug to provide the mechanical and electrical connection to the usual 3/8-24 stud that is found on mobile antenna base sections. If you dig around in the plumbing supplies, you can find a regular 3/4" to 1/8" pipe bushing that has a lot of threads both inside and out. The inside 1/8" pipe threads will be tapered and it may be necessary to run a 3/8-24 tap all the way through so it will screw all the way onto the bottom mast section. The cast bushings are not so good, but usually in the same bins there will be ones that appear to be machined and are also plated. A brass bushing would be dandy.

Screw this bushing into the bottom end of the pipe until all the outside threads disappear. Here's where a lathe would be great, because it is important to get this plug in straight so the antenna will stand at attention properly when it is finally mounted on the vehicle.

The pipe bushing will screw in very tightly and makes its own threads as it is turned in. Be sure the pipe is at room temperature so it won't crack. I have never used any glue or cement to hold the bushing in and have never had any reports of any coming loose. Believe it or not, this makes a really rugged mount. I have hit low obstructions with the coil hard enough to break off the bottom mast section with no damage to the coil.

When the bushing is in, drill and tap for an 8-32 screw on the side of the pipe, through the PVC and into the bushing. Do this directly below the 1" point where the number 30 drill came out opposite the penciled line. This screw will be used for the lower coil connection.

Winding the Coil

Winding the coil is really the most difficult part of construction, particularly if a lathe is not available. The coil is wound with 196 turns of #18 solid copper wire space wound to 12 turns per inch. The 40 meter tap will pass over the tap hole at the 71st turn. 85 feet of wire will be sufficient to wind the coil and leave plenty to play with on both ends.

Before you go at it the hard way, check with one of the local adult education classes where someone is taking shop and a lathe is available. Set up the lathe for 12 threads per inch, run the wire through a guide on the tool post, and it will take the operator about one minute to wind the entire coil. Note how the start and finish wire is dressed through the holes in the PVC coil form (see Fig. 6).

Also, if I am winding on a lathe, I spray a thin coat of adhesive on the pipe just ahead of the winding to help keep the wire in place. Sometimes when I am not in a hurry, and can leave it in the lathe for a while, I brush on a generous coat of fiberglass resin or varnish over the windings and let the coil keep turning while the stuff sets up. This makes a very attractive finish and it can even be painted to a color of your choice. Just be sure you are careful about the kind of paint used. No metallic particles, please! I have been that route.

If resin or varnish is used, be sure to put a toothpick or some similar plug in the 40 meter tap hole so it can be cleared later without damaging the wire.

Those of you who have shrink tubing available can go ahead and use it over the coil; it works fine. Also, it is advisable to drill a small drain hole on the side just above the bottom plug. I found this necessary as I unscrewed my coil one day to show it off. The coil holds exactly one coatsleeve full of water!

As I say, if you can get to a lathe, you have it made. I would certainly make every effort to locate one. If not, there are other tedious ways to space-wind coils, but one this size gets to be a problem. Our luck has been that when the XYL and I are very carefully winding one by hand, the phone will ring. The question is who drops what, or do you just start over only to have the whole thing "clunk" together at the very last turn?

A popular way, of course, is to select another piece of wire or a string that will give the correct spacing, and then

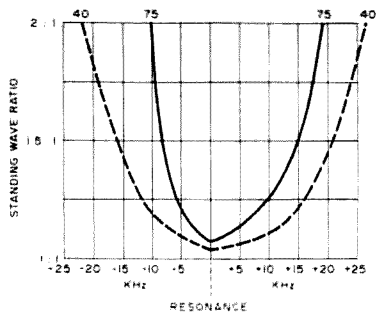

Fig. 4. Swr curves for typical big DK.

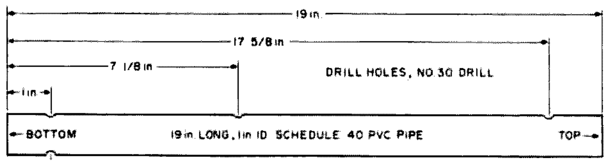

Fig. 5. Preparing the coil form.

wind it side by side with the coil wire. When the winding is completed and secured, the wire or string is carefully removed.

Preparing the Coil Wires

Remove the insulation from the end of the bottom coil wire and place it securely under the 8-32 screw that goes into the side of the 3/4" pipe bushing. I use a brass screw and then a dab of solder to be sure there is a good electrical connection. This is a low voltage point and it is wise to continually inspect all connections from here on down to the feedline to keep the I/R losses to absolute minimum. Dissimilar metals and constant exposure to the elements encourage trouble, causing corrosion in a very short time.

For the 40 meter tap I use an eighteen inch piece of the inner insulated conductor from stripped RG-58U or other similar small coax. Strip the insulation from this inner conductor 2" on one end and 3" on the other. Be sure there are no nicks in the wire.

Remove the insulation from the coil winding that passes directly over the hole drilled for the 40 meter tap (turn 71). Be sure you don't take any insulation off the adjacent windings. Clean out the hole under this wire.

Now shove the wire just prepared down through the inside center of the coil form from the top so that the bare end stripped 2" comes out through the 40 meter tap hole. This is not hard to do. Put a long 90° radius on the bare 2" end and then hold the pipe and wire in such a way that as you shove it down toward the tap hole you have a good chance of it coming out on the first try.

Pull this wire out so the insulation is tight up against the inside of the 40 meter tap hole. Use a small soldering iron and solder this wire to the winding that passes over the hole. Put a little bend or hook in the end of the tap wire to help hold it mechanically. Try applying a little pressure to this connection with the soldering iron, pushing it just below the outside surface of the PVC. Don't push too hard or you'll have a horrible mess. When soldered, carefully trim off the excess wire and examine closely to make sure there are no solder blobs or bitter ends touching the adjacent windings.

Cut off the wire coming out of the coil from the 75 meter hole so the wire extends three inches beyond the top end of the pipe. Remove two inches of insulation from the 75 meter wire. Tin both the 75 and 40 meter wires. Now your masterpiece should look like Fig. 6.

Preparing the Tee

The support for the two whips on top of the coil is a one inch PVC pipe tee that slips on the top of the completed coil. When obtaining this fitting, ask for a "slip-slip-slip" one inch PVC tee for 1" schedule 40 PVC pipe. No threads.

Drill two 5/16" holes, 1 1/4" each side of center, through the top of the tee for

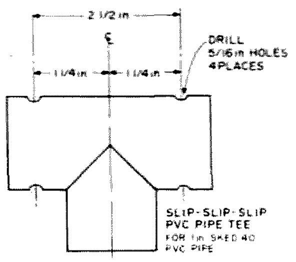

Fig. 7. Preparation of PVC tee for top whips.

mounting the two whips (see Fig. 7).

It is important that these holes are absolutely parallel to both the sides and ends of the tee. A drill press is a big help here but it can be done with a hand drill if both sides are very accurately marked and caution is used while drilling. Don't let the drill or the tee wobble and make the holes egg-shaped because this will affect the proper installation of the whips. Of course where I drill a large number at a time, I have cheated and fabricated a fixture so if I make a mistake I have a box full of instant surplus!

Installing the Tee

Align one open end of the tee so that it will line up with the hole where the 75 meter wire goes through the side of the pipe. Place the 75 and 40 meter coil wires up into the tee and out their respective ends, and push the tee onto the coil end. Be sure that the open end selected is still lined up with the 75 meter wire hole. This is very important to provide maximum clearance between the 75 and 40 meter connections. Also be positive that the two wires are not crossing over each other inside the coil form or the tee. There are tremendously high voltages here and precautions must be taken to prevent arc-over. When the alignment of the tee is verified, tap it all the way down onto the coil form as far as it will go. I use a rawhide hammer.

Here again I have not found it necessary to use any PVC cement because this slip fitting is plenty tight and, if necessary, it can be driven off again. The coil now looks like Fig. 11.

The Top Whips

The top whips on mobile antennas usually take a pretty good beating from low branches and flourescent bulbs in service stations. They have to be flexible enough to give when an immovable object is struck, but still stiff enough to recover to the original position without taking a set.

The position that a top whip maintains determines the exact resonant frequency. It should not wave around too much while underway. This is why I do not use, nor recommend, a spring mobile mount. The mobile antenna must maintain the same relative position to the vehicle at all times to keep it at resonance. When you see someone tearing down the road with the antenna swinging wildly in the slipstream, you'd better get in contact quick, because by the time he gets down to the next corner he's going to be out of range!

Over the years I have tried various brands and combinations for top whips, but there was always something lacking. Many times the price bothered me. Currently I am using 1/4" diameter solid fiberglass poles covered with copper braid. The best source for these fiberglass poles in small quantities is the six foot bicycle safety flag. Cheap, too; less than a buck.

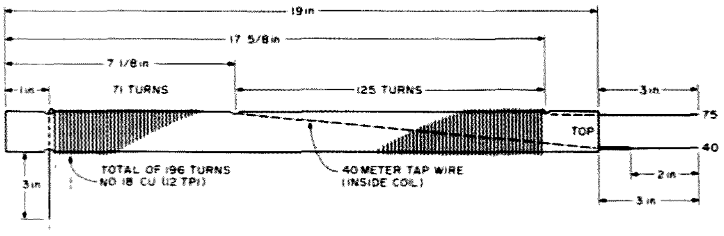

Fig. 6. Big DK loading coil.

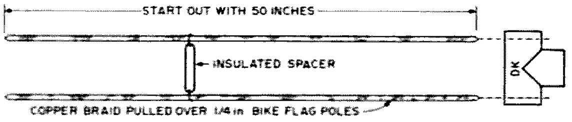

Fig. 8a. Fiberglass whips.

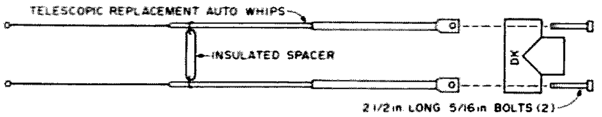

Fig. 8b. Adjustable auto replacement whips.

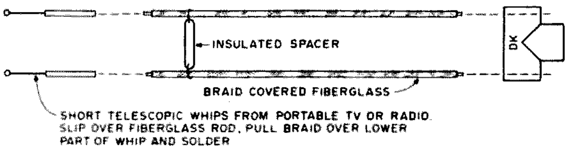

Fig. 8c. Adjustables on fiberglass whips.

Probably the best source for the copper braid to slip over the fiberglass poles is some old scrap coax. I found some old RG-6U and used the silver tinned braid. It looks real classy while it is new.

To make the whips using the fiberglass poles, cut two of them 50" each and slip the copper braid over them. Pull the braid up tight on both ends, give a good twist and cut off the excess (see Fig. 8).

Later on, the whips can be painted, doped or just left as is. My Sunday antenna is striped FAA orange and white. It gets a lot of attention. When the other driver hesitates for the second look, you get the jump on him at the traffic signal.

Alternate Top Whips

You might come up with some alternate top whips which will work as well as the cheapie bicycle flag poles. A couple of the local mobileers have used their retired fiberglass CB whips and just pruned them down to resonance. Another ex-fisherman used two of his old tapered hollow fiberglass fishing poles. For the conductor, he just merely shoved a #12 copper wire up through the center and, when it was trimmed to the proper length, he soldered a neat little corona ball on top.

Automobile Replacement Whips

I have also used a number of the automobile replacement whips (Fig. 8b). These are the type that slip over the 5/16" diameter auto whips that get ripped off. One source is the Ward TCFR-1; another is Radio Shack part #12-1309. These telescopic whips are not really the greatest for mobile use because when they hit something they normally bend and take a set which puts the antenna off resonance.

For the travel trailers and mobile homes and other stationary installations, the replacement whips work out just fine. The advantage, of course, is being able to vary the length easily if you have the urge to move around the band.

Installation of the Top Whips

Installation of the braid-covered fiberglass whips is relatively simple. With the braid pulled tightly over the 1/4" fiberglass poles, they will go into the 5/16" holes in the PVC tee with a very snug fit. Push the whips on through so the bottoms protrude out the bottom holes in the tee about an eighth of an inch (see Fig. 8).

Pull the 75 and 40 meter tinned coil wire leads around their respective whips. Take up all the possible slack from inside the coil form and then solder to the braid on the whips (Fig. 9). Be very careful that the PVC tee doesn't get too hot. It melts very easily. Cut off any excess wire and dress so that sharp ends are pointing toward the outside ends of the tee. If you have some Glyptal, it won't hurt to coat these connections. Don't leave any debris that might encourage corona inside the tee.

Use a piece of the leftover 1/4" fiberglass rod for a spacer to hold the two top whips parallel. Cut the spacer 2 1/4"; drill two small holes crossways close to both ends. Thread a 2" piece of bare wire through each hole. Place this spacer between the whips about 36" up from the tee, wrap the bare wires around the braid and then solder to hold it in place.

Be sure you can identify which whip is which, and then plug up the open ends of the tee. Cap-plugs that are often used to protect pipe threads can be modified to snap in. Maybe you have a couple of spare plastic shot glasses.

Finally glue, dope, epoxy, or what have you around the four holes in the tee where the whips fit.

Bottom Section

The bottom section of the mobile antenna should be installed to place the bottom of the antenna coil a minimum of 6" above the highest part of the vehicle. The length of the bottom section will vary with the location of the base mount on the vehicle. I have installed lower sections with lengths varying from 18" to 6 feet without degrading the efficiency of the antenna. Anytime any part of the loading coil is placed below the highest part of the vehicle, the radiated signal suffers considerably.

Bottom Section Fabrication

A very simple, sturdy and cheap antenna bottom section can be made from a piece of 1/2" EMT – thin wall conduit. Cut off the desired length and then in each end braze a 5/8" by 1/2" long hex-head bolt. Chuck this up in the lathe and drill and tap 3/8-24 both ends (see Fig. 10a).

If a lathe is not available, you'll have to come up with the old "drill a hole in the bolt trick," which could be to sneak it in on one of the local shop teachers while your coil is being wound.

Antenna Mount

While you are at it, you might as well go all the way and make your own base mount. This can be done with a 1" bolt and a few homemade insulating washers.

Dig out a bolt that has no threads within a couple of inches from the head. Make a very square cut and saw off the threaded end and discard. Using the same "drill a hole in the bolt trick," drill and tap a 3/8-24 hole 3/4" deep in each end. Cut out a few washers from some good insulating material and drill the

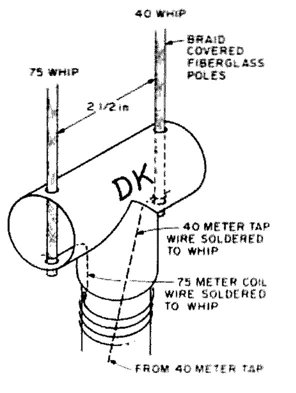

Fig. 9. Detail of coil wires' connection to whips.

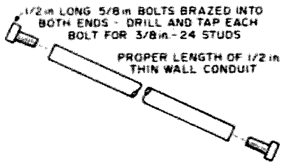

Fig. 10a. Lower mast section.

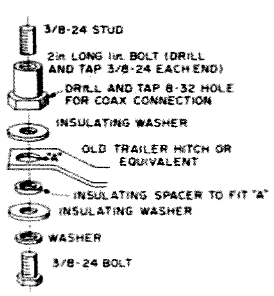

Fig. 10b. Homemade antenna mount.

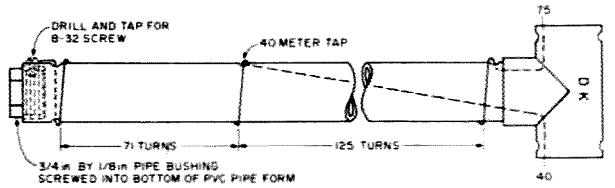

Fig. 11. Completed loading coil ready for whips.

centers of each with 3/8" hole. Assemble as in Fig. 10b.

Matching Capacitor

The capacitor across the antenna end of the feedline preferably should be a variable with a range that goes through 500 pF to 1500 pF. I was able to pick up a few compression screw driver adjusts, Arco part #310. These worked out very well and they could be put right on the money for a good match. The way to adjust the cap is to jump back and forth from one band to the other, readjusting the capacity for the lowest swr on both bands with the same setting. This will affect the resonant frequency of the antenna a small amount, so be sure you have the capacitor in place and adjusted close to the correct value before pruning the whips the last few kHz. See Fig. 12a.

If one of the adjustable trimmers cannot be located, start out with a fixed 820 pF silver mica. It is very possible the 820 pF will give an swr of 1.1:1 or less.

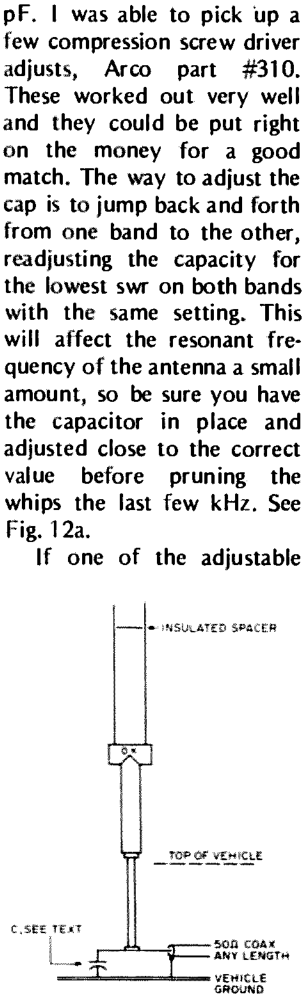

Fig. 12a. Installation.

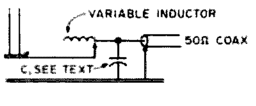

Fig. 12b. Installation of variable inductor.

Pruning the Top Whips

With the assembly installed on the vehicle as in Fig. 12, connect the antenna noise bridge in the line and look for the resonant point on both bands. Using the braid-covered bike whips, each 50" long, will place the antenna quite low on both bands. Thinner whips, however, will require lengths up to twenty percent longer.

First of all, if you are using a variable inductor at the base, as in Fig. 12b, be sure it is set at the minimum inductance before you start pruning and tuning.

If resonance cannot be located starting with the 50" whips, don't overlook the fact it may be so low that it is at a point below the frequency range of the receiver.

Slide the braid down on the whips, saw off one inch of the fiberglass, pull the braid back up tight, give it a twist and cut off the excess. Continue this, cutting off shorter and shorter pieces until the desired resonant point is reached. It is very doubtful that the whips will be much shorter than 46" each when the antenna is completed. Don't get confused; be sure the proper whip is being trimmed, because it gets embarrassing when one of the whips keeps getting shorter and the frequency does not change. After the last and final prune, pull the braid up tight again, give it a twist, put a bit of solder over the end and trim off smoothly.

Normally one inch removed from the 40 meter whip will raise the frequency 50 kHz. One inch removed from the 75 meter whip will raise the frequency 25 kHz.

Using the telescoping types of top whips will make tuning a lot easier, but you are not going to be happy with them mobile unless you have some of the exceptionally good ones made particularly for this type of service.

Random Info

This antenna has been developed in various other directions: 160 and 75 meters; some three banders, 160-75-40 and 75-40-20; two whips on the same band, permitting CW and phone band without retuning the antenna; MARS and amateur.

On mobile homes and travel trailers, a base section of approximately 14 feet, plus or minus a little, will permit operation on 20 in addition to 75 and 40 by just using the two whips. The big DK on the top appears as a top hat on the 20 meter 1/4 wave vertical.

With the antenna mounted on the rear of the vehicle, the resonant frequency on 75 will go down as much as 30 kHz when a travel trailer is hooked on behind. Likewise, if you have the antenna installed on a travel trailer and then connect the tow vehicle – zip – down the band it goes again. The amount of shift depends on the location of the antenna in relation to the added vehicle.

Don't expect any directivity from 75 or 40 mobile antennas. The pattern around a vehicle on a properly installed 75-40 meter antenna is very symmetrical. If someone says "I'm headed toward you now and I should be louder," – don't get sucked into agreeing with him.

A properly matched antenna presents a 50 Ohm load at the base, and the length of coax feedline has no effect on the resonant frequency of the antenna. Of course I would not recommend a couple of hundred feet under the front seat; it gets sort of lumpy.

It may be noticed that I did not mention "roller" inductors for the QSY variable coil at the base. There are other ways to produce a variable inductor, probably right out of the scrap box. Think about it.

Another way to lower the frequency of a fixed whip is to alligator clip a "stinger" on the whip right above the tee and let it trail aft (see Fig. 13). A clip and a piece of wire with an overall length of 8" will move the 75 meter resonant frequency down about 30 kHz.

One owner mounted a tiny telescopic antenna out of the 75 meter end of the tee. He can reach this adjustable whip out of the pickup window while underway. We call him "Hot Fingers Ralph."

Another mobileer starts out early in the morning, checking into a weather net, and then drops 25 kHz down the band. He installed his

spacer at the very top of the whips. At the center he wedges in a 4" plastic spacer to bow the whips out from one another in the center. This four inch plastic temporary spacer is attached to a fishline leading into the car window. After he checks out of the weather net he jerks the spacer out and pulls it in the car. Presto! He's 25 kHz down the band. The next morning the spacer goes back in. This illustrates how important it is to keep the two whips in the same relation to each other at all times.

The bicycle poles with the braid covering are also doubling around Wireless Hill as 2 meter verticals, VHF and UHF beam elements. Uses around the station are limited only to the number of bicycles ripped off.

It is best to orient the tee on the antenna crossways to the vehicle. This allows for better fore and aft flexibility. Also it has been found that, with the tee aligned fore and aft, the turbulence from the leading whip creates a severe flutter to the trailing whip which causes the whole assembly to vibrate.

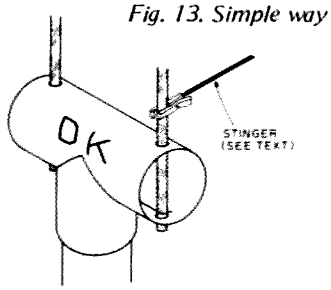

Fig. 13. Simple way to lower frequency in a pinch.

Acknowledgements

I want to thank the numerous amateurs who put up with my haranguing in addition to contributing their time, money, materials, ideas and field testing during the development of the big DK. They are all the greatest. This has certainly been a cooperative project and it is continuing. ■

New Products

HOW ELECTRONICS GOT FASTER AND EASIER TO WORK WITH THANKS TO MODERN SOLDERLESS BREADBOARDS

A P Products Incorporated of Painesville, Ohio, originated the modern solderless breadboard in 1968. Since then, tens of thousands of solderless breadboards have been used each month by electronics experimenters and designers in a wide variety of fields.

But just what is a solderless breadboard? How does it work? What advantages does it offer? Where can it be used? And how?

Before the era of modern solderless breadboards, designing and testing any given electronic circuit was an aggravating, tedious, time-consuming task. First a circuit would have to be designed on paper. Then the schematic diagram of the circuit would have to be translated into a circuit board parts layout for either point-to-point or printed circuit wiring. If a printed circuit were to be used, as was most often the case, the circuit layout would have to be transferred to a copper-clad board, the copper selectively etched, holes drilled, and components soldered in place. Then, if a component proved the wrong value, it would have to be desoldered and a new one soldered in place. If the printed pattern were in error, a whole new board would have to be laid out, etched, drilled, filled and soldered. A lot of time, a lot of work.

Then A P Products came up with the idea of arranging a breadboard with a matrix of interconnected holes. The interconnections are made by conductive spring clips that grip each component lead firmly to establish a good electrical connection without soldering. The matrix of holes was laid out in a tenth-inch spacing pattern to conform with standard component lead spacing.

The interconnection pattern was designed to provide ample access to each lead of each component, especially with modern transistor and integrated circuitry in mind. And distribution strips were designed to provide power and signal lines where needed.

Circuit designing now becomes plug-in-easy. ICs and/or discrete components plug into the solderless breadboard and ordinary 22 gauge solid wire jumpers are used to interconnect them.

A given circuit can now be prototyped in minutes rather than hours or days. Many designers work directly with component specification sheets, many with schematic diagrams. Changes in parts values are as easy as pulling out one part and plugging in another. And the geometry of the modern solderless breadboard translates into a printed circuit layout readily, once the circuit is ready to commit to hardware.

In addition, solderless breadboards can serve as a basis for semi-permanent circuits in applications where the need for a given circuit requires reliability but does not require longevity.

Applications for modern solderless breadboards are as wide as all of electronics. There are professional applications in machine control, data processing, test and measurement, device testing, prototyping and equipment adjunctive aids. There are hobby applications ranging from communications to photography to automotives to biofeedback to music to model railroading and more.

And, of course, solderless breadboards are perfect for educational and instructional applications.

Solderless breadboards and breadboarding aids come in many sizes and prices, capable of circuits as simple as you like or as complicated as a small computer.

A P Products continues to be a pioneer in the development and application of modern solderless breadboards. If you have questions about what solderless breadboards can do, how much they cost, or what's available, contact A P Products at Box 110, 72 Corwin Drive, Painesville OH 44077. A P Products has available a free catalog of their ACE All Circuit Evaluator solderless breadboards, Super Strips™, Terminal and Distribution Strips, IC Test Clips and accessories.

For more information, contact Robert J. Gabor, A P Products Incorporated, Box 110-P, Painesville OH 44077. Phone: (216)-354-2101; TWX: 810-435-2250. Direct all inquiries to Rita Mercer.

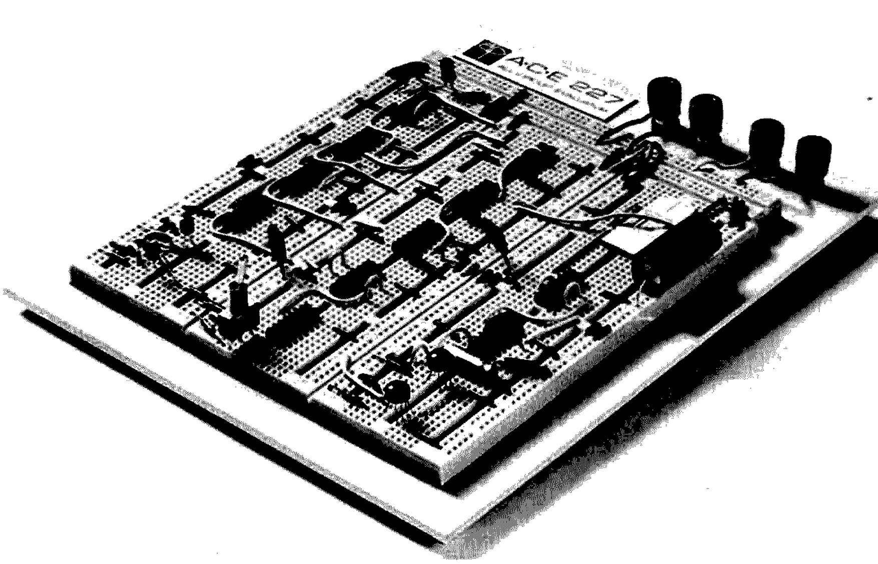

DRAKE RCS-4

Checked the price of RG8-U lately? Want to beat that price and clean up the unsightly mess of coax running down your tower? The boys at Drake have a real winning number for you.

The RCS-4 is a remote controlled switch that will switch 5 antennas from 1 feedline, ground those not in use – and will ground them all when not in use. Cheap lightning protection, right?

This unit will take full legal power, and operates up through 2 meters like a champ. Only 24 volts dc to motor – and has rain hat construction to prevent moisture damage.

This jewel works like a dream, with swr less than 1.5 to 1 even on 146.94. At $120.00 this has to be one of the top buys. We aren't easily impressed, but this got our attention. Switch 3 beams and a couple of inverted vees, all with only 1 up lead. Fantastic! Available at your dealers.

Build a Counter for Your Receiver

- - updating receiver fun

About 18 months ago, I sat down to design a simple digital dial for my receiver. I ended up building a deluxe, no-compromise received frequency counter. My reasoning was that with TTL IC and LED readout prices being so low, it would only cost a little bit more to go all the way. In retrospect, this appears to have been a wise decision. Component prices are still declining. During the development period, I had occasion to use the digital frequency readout with single, double and triple conversion receiving setups. All I ever had to do to change over to the new receiver was connect its oscillators to the counter and reprogram the count direction for each oscillator by means of a few wire jumpers.

The basic features of my digital frequency readout system are illustrated in Fig. 1. The multiplexed up-down counter principle is used. Since 4 inputs are available, the system is directly applicable to up to triple conversion receivers. The up-down controls for each input are made available as external connections. This facilitates reprogramming the unit for use with a different radio or with more than one radio. I found that tri-state logic buffers (8T97B, e.g.) are ideal for a multiple receiver interface.

The received frequency counter shown in place on top of my HRO-50T receiver. This chassis contains all of the circuitry described in the article except the crystal oscillator, power supply, and multiple radio interface. These are still in breadboard form and are not shown for aesthetic reasons.

The system has a 50 MHz

Jack Regula WA3YGJ
105 Sutcliffe Lane
Conshohocken PA 19428

guaranteed, 75 MHz typical maximum input frequency. Its error limits are ±¼ count times the number of counter inputs used, ± the timebase error. 100 Hz accuracy as well as resolution is readily achieved for a double conversion receiver with only a 6 digit counter. Since the counter updates its display at a rate equal to one twentieth of its resolution, 10 Hz resolution is still usable. I built a 7 digit counter with switch selected resolution. I don't employ the higher resolution in normal operation, but it comes in handy when aligning the timebase and when using the counter on the test and development bench. And, like I said before, it only cost a little bit more to add the extra digit.

Interface Design

The success of any digital frequency readout system hinges on the user's ability to connect it to his radios without upsetting their operation. Careful shielding and layout and avoidance of ground loops are necessary to ensure adequate isolation between the analog and digital circuitry. The biggest headache I had occurred when I created a logic signal from a bfo right on the receiver's chassis, then found I couldn't keep it out of the i-f. You can probably save yourself a lot of time by avoiding that mistake. An easily implemented and relatively foolproof interface is shown in Fig. 2. Use an FET buffer close to the oscillator tank circuit to isolate it from the logic circuits. Bring the buffered signal to the counter's chassis in coax with the shield grounded at only one end to avoid ground loops. If you have at least .6 V p-p at this point, an inverting tri-state buffer with resistor feedback will convert it to TTL levels. If gain is required, try a step-up transformer. If you've got a lot of signal, install a protective diode at the 8T98's input.

That's the circuit design. Systems considerations dictate a modular, expandable packaging approach. To prevent spurious responses in the receiver, we need to shield the high speed digital lines and to isolate the oscillator signals from each other. For these reasons, I put 2 sets of the interface circuits shown in Fig. 2 in a 2¼" x 1½" x 2" minibox. Female BNC connectors mounted to the minibox wall bring the oscillator signals in. Feedthrough terminals on the opposite wall couple the tristate TTL outputs to twisted pair lines daisy chained between the miniboxes. Each minibox contains a single 8T98 IC mounted in a wire wrap socket on a copperclad board. Isolated pads are cut to hold the discrete components. All of the interface miniboxes are enclosed in a larger metal box to shield the twisted pair lines. These lines are terminated, as shown in Fig. 3, and additional drivers send the signals to the counter chassis via coaxial cable.

While I haven't tried them all yet, several techniques are available for expanding this digital frequency readout system's versatility. By pre-

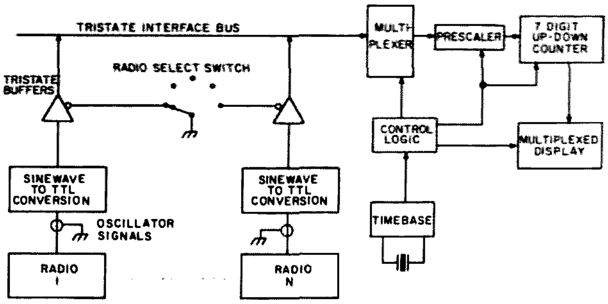

Fig. 1. Block diagram of digital frequency readout.

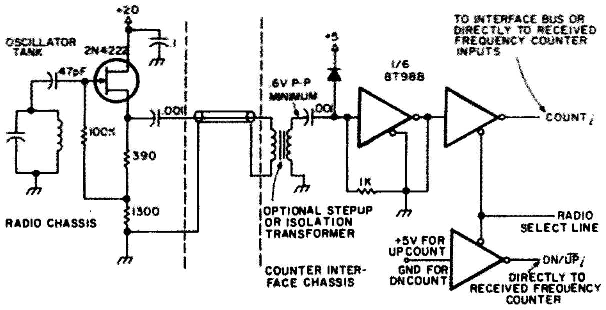

Fig. 2. Oscillator-counter interface details.

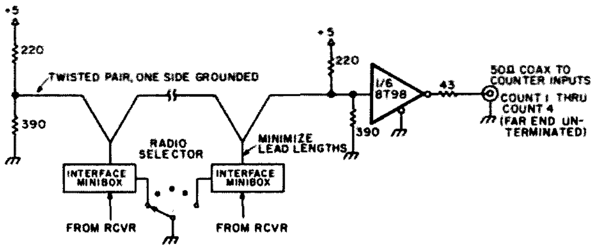

Fig. 3. Interface bus details.

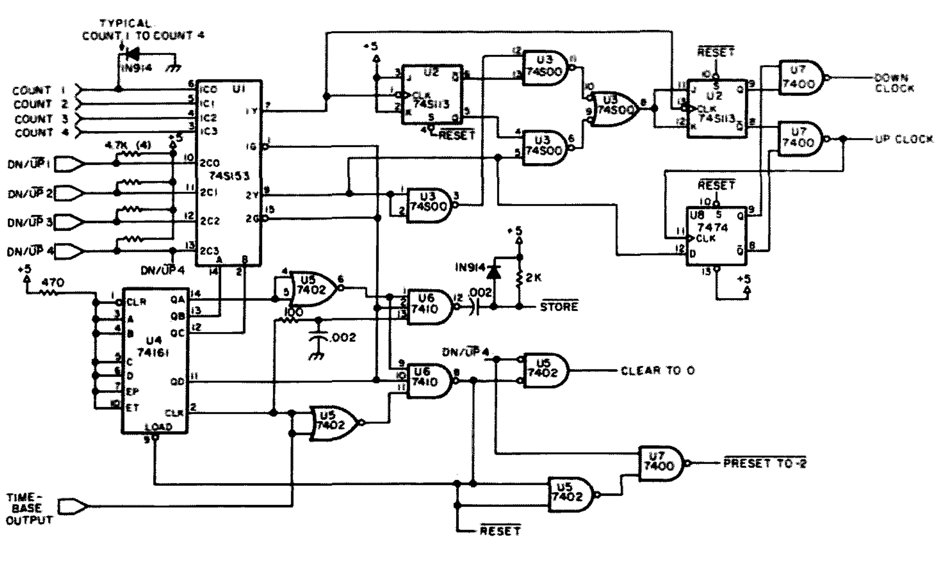

Fig. 4. Counter front end and control circuitry.

scaling every oscillator, you can use it with VHF and UHF converters. A frequency multiplying transmitter can be read out by connecting its vfo to 1, 2, 3 or 4 counter inputs, depending upon the band in use. With a voltage to frequency converter and additional control circuitry, you could fashion a digital voltmeter with automatic correction for offset voltage. Once you have the basic system built, I'm sure that additional uses will suggest themselves.

Counter Front End

The counter front end circuitry is shown in Fig. 4. IC1 is a dual 4:1 multiplexer. Its purpose is to scan the four COUNTi and the associated DN/UPi inputs, connecting each pair in ascending numerical order to the circuitry which follows. Short lead lengths and power distribution techniques are moderately important here due to the sharp rise and fall times of the signals involved. In particular, mount IC1 near a board edge so that short, direct point to point wiring can be used between it and the coax connectors on the chassis walls.

The top multiplexer output clocks a 2 stage up-down counting prescaler implemented with Schottky ICs for high speed. Its count direction is controlled by the bottom multiplexer output. The flip flop and NAND gates at the prescaler's output generate the separate UP CLOCK and DN CLOCK signals required by the 74192 decade up-down counters which follow.

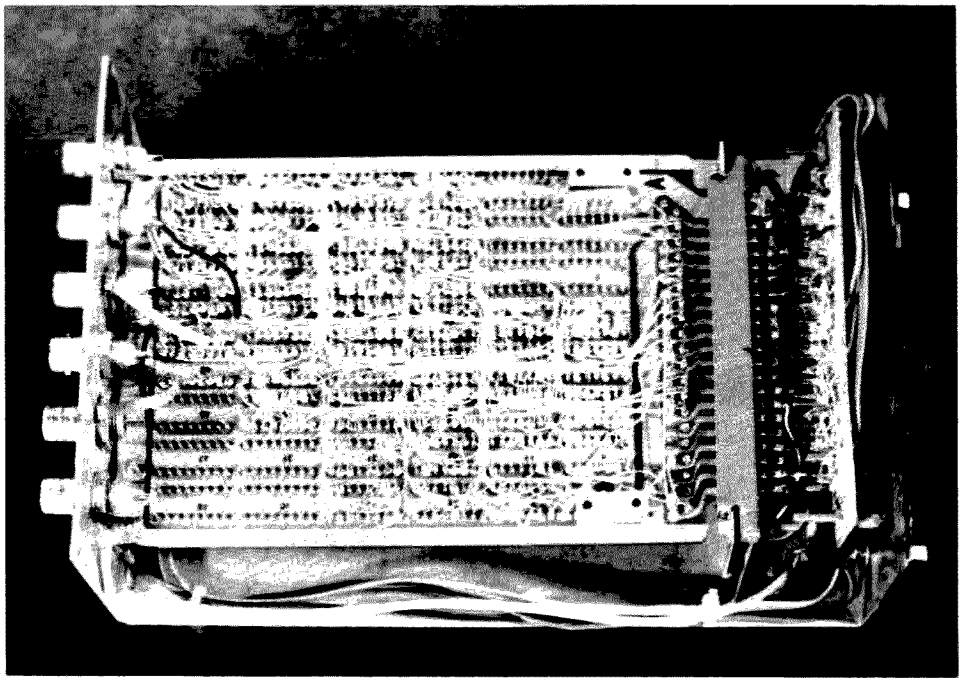

This photo shows the methods used to mount the main logic and display boards. Note the direct wiring from 4 of the coax jacks to the multiplexer IC's inputs.

Note that the control flip flop (IC8A) changes state synchronously with the UP CLOCK output. This ensures error free operation when the count direction is changed, but requires some additional precautions in the unit's design and application. With this technique, the last up count that occurs should have been a down count. Unless corrected, the display will be 2 counts high. We correct the count in advance by starting it from -2 instead of 0 if there is going to be a down count.

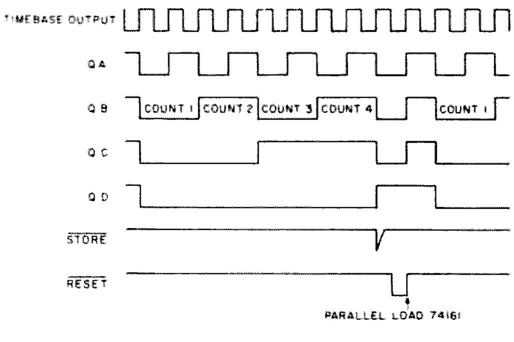

Fig. 5. Control logic timing diagram.

The unit assumes that if there is going to be a down count, then the fourth pair of counter inputs (labelled COUNT4 and DN/$\overline{\text{UP}}$4) will be set for a down count. It can only correct for a single change of count direction so ensure that all of your oscillators which require up counts are connected to lower numbered inputs than those requiring down counts.

Control Logic

The control logic provides the signals which cause the multiplexer to scan the four inputs, store the final count, initialize the counters, and start the frequency measurement cycle over again. Its operation is diagrammed in Fig. 5. The frequency of TIMEBASE OUTPUT should be at half the desired display resolution. It is divided by the 74161 (a 4 bit binary up counter) to control the multiplexer IC's "select" inputs. Qd of the 74161 is used as the count gate. It works by enabling (low) or disabling the multiplexer IC. The timing diagram shows that the frequency measurement cycle begins when a positive edge of TIMEBASE OUTPUT increments the 74161 to the all zero state. Subsequently, each count input and down-up control input is connected to the prescaler for precisely two periods of TIMEBASE OUTPUT. Qd then goes high, inhibiting further counts. This transition is followed by the $\overline{\text{STORE}}$ and $\overline{\text{RESET}}$ pulses.

$\overline{\text{STORE}}$ loads the received frequency count into the recirculating shift register memories that are part of the multiplexed display drive system and synchronizes them with the digit strobe circuitry.

$\overline{\text{RESET}}$ initializes the prescaler flip flops and sets up the 74161 for the next frequency measurement cycle. For reasons discussed previously, this signal is steered to CLEAR TO 0 or $\overline{\text{PRESET TO -2}}$ depending on the state of DN/$\overline{\text{UP}}$4 to initialize the main up-down counter.

Don't omit the RC network at the input of the 7410. It's needed to eliminate

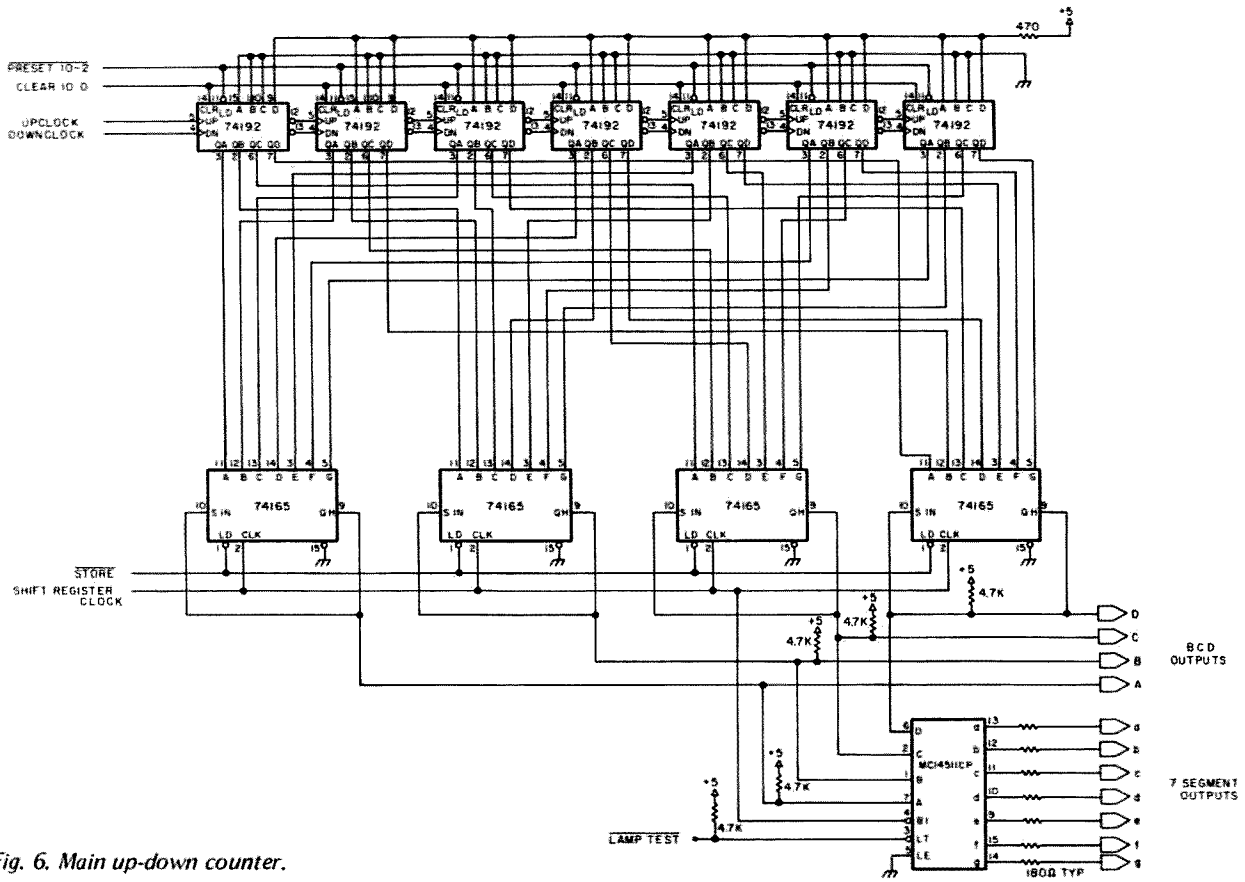

Fig. 6. Main up-down counter.

a glitch and adds to the delay provided for the last count to propagate to the final counter stage.

Main Counter

Seven (or as many as you want) 74192 dual clock up-down counters are used as shown in Fig. 6. Note that the clear function requires a positive pulse while preset needs a low going pulse. The data inputs of the counters are connected to represent 9999998 or -2 in BCD code. Their outputs are wired to the parallel load inputs of four 74165 8 bit shift registers.

Multiplexed Display Drive

Several advantages result from using a multiplexed display. These include minimum parts count, lower cost, fewer interconnects and lower power dissipation. With this technique it is often a simple matter to mount the display remotely in a window originally intended for a receiver's slide rule dial. The actual displays are easily wired up. Just connect like segments in parallel and run individual digit strobes to the common cathode or common anode of each digit. Radio Shack sells a universal multiplexed display PC board for this purpose which appears to be ideal for use with any of the larger LED digits.

Using 8 bit shift registers for the display memory, rather than separate latches for each digit, helps keep the DIP count down. Data indicative of a received frequency is loaded into the registers shown in Fig. 6 by the STORE pulse at a 5 or .5 Hz rate depending on the resolution. Subsequently, each SHIFT REGISTER CLOCK pulse moves the data one place (actually one digit) to the right. The four bits for each digit appear in sequence, most significant digit first, at the inputs of the seven segment decoder driver IC and are recirculated by means of the serial inputs to the shift registers.

The digit strobes are generated in a fifth shift register, shown in Fig. 7. This IC contains a single "1" which is shifted down its length in synchronism with the received frequency data in the other shift registers. Simple buffers enable the "1" to turn on the LED digit corresponding to the data currently at the inputs of the 7 segment decoder/driver. High beta emitter followers with a pull-up resistor to +5 V at each shift register output will allow strobing of common anode displays. The buffer circuitry in Fig. 6 is for common cathode displays and features the use of an integrated digit driver. I'd better point out that for common anode displays you should change the 7 segment decoder to a 7446.

Interdigit blanking is incorporated by connecting SHIFT REGISTER CLOCK to the active low blanking input of the 7 segment decoder. This eliminates ghosting effects seen in multiplexed displays when one digit is not given sufficient time to turn off before the next digit is turned on. SHIFT REGISTER CLOCK can be as high as 10 or 20 kHz if necessary or convenient so display flicker needn't be a problem. Use a signal from the timebase divider chain that has a high duty cycle (a Qd of a 7490) for minimum loss in brightness due to the interdigit blanking.

Timebase

To operate the received frequency counter, we need a switch selected 5 or 50 Hz TIMEBASE OUTPUT signal

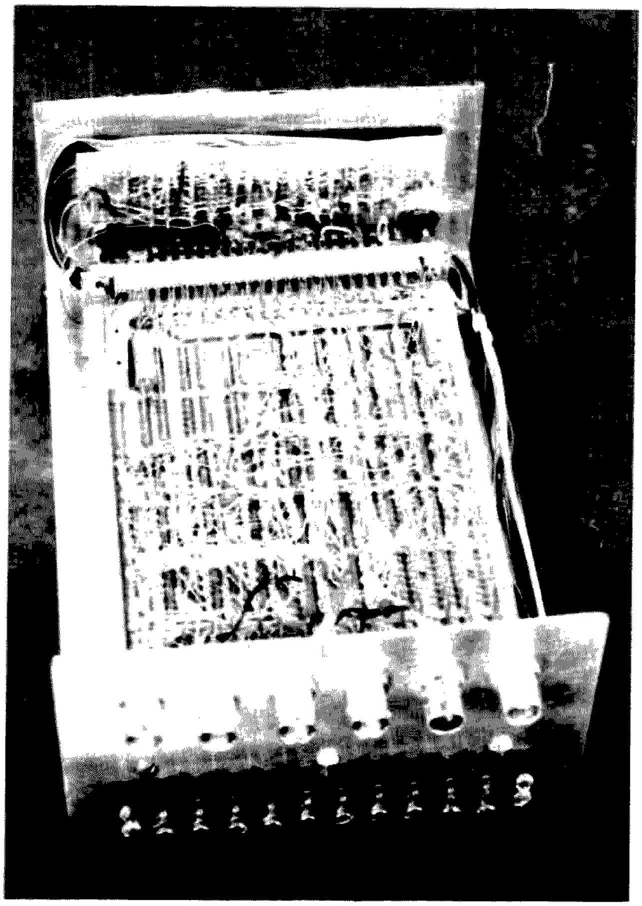

The rear panel connections are visible here. The coax jacks are for a direct input to a VHF prescaler, the 4 COUNTi inputs, and the 5 MHz frequency standard. The barrier strip is for power, count direction control, and outputs from the input selector switch.

as well as a SHIFT REGISTER CLOCK. To make the counter's resolution meaningful, these must be derived from a crystal oscillator of more than ordinary stability and accuracy. I chose a crystal oscillator frequency of 5 MHz for easy comparison to WWV. A cascade of 6 7490 decade counters yielded all of the required frequencies.

My timebase circuitry is shown in Fig. 8. The oscillator circuit is from an article by Kelley[1]. He described a circuit which employs a 4 MHz crystal and also provides all of the output frequencies we need here. A significant advantage of his circuit is that he made a circuit board available for it.

How important is timebase accuracy? It doesn't take much more than .3 ppm error at 30 MHz to cause a 10 Hz received frequency error. To obtain such accuracy you must adjust the oscillator to zero beat with WWV using a visual indication of zero beat, such as a Lissajous figure on an oscilloscope, or your receiver's S meter. The oscillator should be aged by at least a week's continuous operation with several hot-cold temperature cycles, then carefully temperature compensated. See Kelley's article for a good description of these procedures.

Power Supply

Thanks to three terminal voltage regulators, power supply design holds no mystery. The only problem is finding suitable components at reasonable cost. I spent less than $12 on the major power supply components at a local Radio Shack store. The received frequency counter requires 5 volts at at most 1.5 Amps. The transformer shown in Fig. 9 can supply twice that load. The second filter capacitor and regulator provide margin for powering the interface components and other equipment.

Construction

The major construction problem is how to interconnect all of the ICs. As discussed earlier, display and timebase PC boards are available. 21 other DIPs remain, plus whatever interface components you use. It's not too great a chore to use wire wrap or a similar technique using solder strippable enamelled wire for these interconnects. Indeed, if you're at all serious about experimenting with digital ICs, you shouldn't consider any other approaches. Economical alternatives to Gardner-Denver tools are available from Godbout Electronics. You can even make your own.[2] With wire wrap, you'll get your projects off the ground faster, be free to make changes at any time, and have an easier time debugging and troubleshooting because the ICs will be in sockets.

I make my own wire wrap boards by pushing the IC socket leads through holes in "P" pattern vectorboard. It's not necessary to solder them in place; the wrapped wires

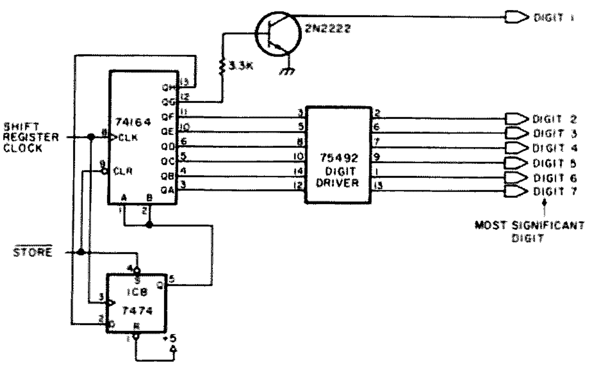

Fig. 7. Digit strobe circuitry for common cathode displays. Modification for common anode displays is discussed in text.

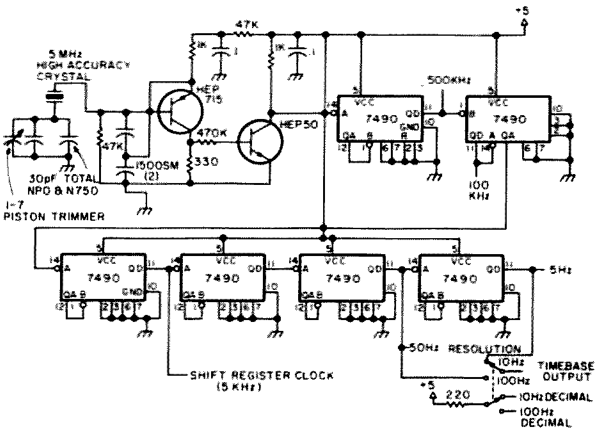

Fig. 8. Timebase schematic.

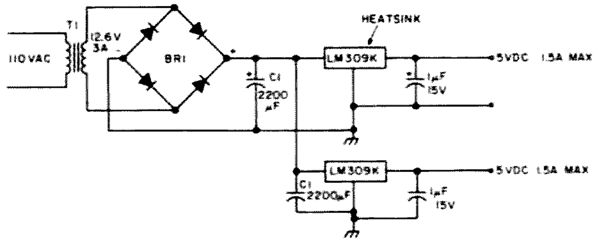

Fig. 9. Power supply. T1 – Radio Shack #273-1511; BR1 – Radio Shack #276-1146; C1 – Radio Shack #272-1020; heat sink – Radio Shack #276-1361.

will be sufficient to hold them in place. The leads of discrete components can also be pushed through the holes and wrapped to or soldered to other component or socket leads. Bus strips for power distribution can be fashioned from lengths of 3/8 inch wide, 1/16 inch thick double-sided copperclad board. These will just fit on edge between push-in terminals placed in alternate rows of holes in the board's grid at convenient tap-off points. The photograph shows the technique applied to a 8K x 8 bit dynamic RAM board. Hopefully, it will give you an appreciation for some of the details I've glossed over.

A word to neophyte wire wrappers: Limit yourself to 2 wraps per pin. Connect top wraps only to top wraps and bottom wraps only to bottom wraps so that entire chains don't have to be unwrapped in order to move a single wire. Keep your leads short and laid out neatly, but leave enough slack in them so that you can tug on one end of a wire and find the other end by noticing what moves when you tug. Avoiding mistakes is far easier than finding them, so be sure to pencil over each wire on the schematic as you put it in.

Packaging of the resulting circuit boards can be as simple or as elaborate as you choose. The woodgrain finished aluminum cases which became available too late for me to use seem ideal for this purpose. In my unit, separate display and counter boards are mounted at right angles to each other on adjoining chassis walls. The U-shaped chassis was bent up from a piece of scrap aluminum and a cover fashioned from a salvaged chassis bottom plate complete with ventilation slots. A can of blue spray paint and a silver on black escutcheon for the front panel added character to this most economical enclosure.

Checkout and Debugging

When you've got all the DIP sockets wired up, it's time to plug in the ICs, turn on the power and cross your fingers. Check each DIP with your fingertips. If one is painfully hot, it's probably defective. If it's more than ordinarily warm, it may have an output shorted to 5 V, ground, or another output. Don't jump to false conclusions here because counter and shift register chips run warmer than less complicated ICs.

After passing this "smoke test," it's advisable to check the power and ground bus noise levels. Greater than 200 mV p-p switching spikes or erratic operation that can't otherwise be explained may indicate a need for more power supply decoupling capacitors. You should use at least a 47 uF tantalum bypass where the power leads attach to the board and additional .1 uF disc ceramics for every 4 or 5 ICs. This will suffice for a low ac impedance power distribution technique such as that described earlier. Less ideal methods may require a .02 uF capacitor at each IC's power pins (except for the 7490s, the standard corner pins) for reliable operation.

Next, hook up and examine the display. With no COUNT inputs, you should be able to change the reading from 9999998 to 0000000 by grounding DN/UP4. Put in a signal of known frequency from the timebase divider chain and you should get a display that is correct to the last digit. Repeat this step with different frequencies and you can check out all of the main counter and display

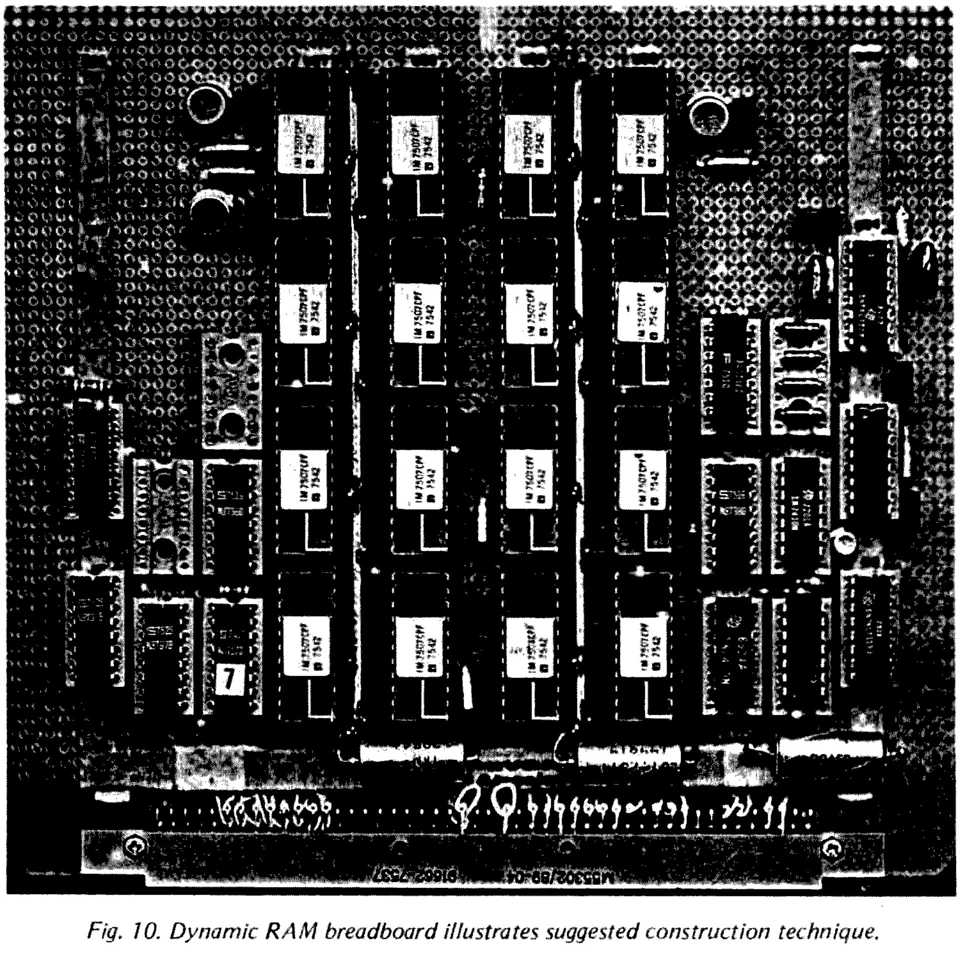

Fig. 10. Dynamic RAM breadboard illustrates suggested construction technique.

circuitry. Exercise each of the COUNT and DN/UP inputs and verify their proper operation. This will complete the checkout phase.

You can expect a problem or two during checkout. If one arises, try to isolate it to a functional circuit area. Check your wiring there and replace or swap any suspect ICs.

The control logic can be proved out by verifying its timing diagram given in Fig. 5. If you don't have a scope, substitute a debounced switch for the timebase output signal and measure the appropriate logic levels with a VOM or logic probe after each alternation of the switch. Measure $\overline{\text{STORE}}$ to the left of its coupling capacitor (CI in Fig. 4) so as not to be misled by its narrow width.

Most problems in the counter chain can be located by signal tracing. With a high enough input signal frequency, simply look for logic level transitions at the counter's Q outputs and at the interconnections between counter stages.

Many display defects can be diagnosed from their visible symptoms. A digit driver stuck "off" will blank its digit. One stuck "on" will cause its segments to glow with perhaps unequal brightness. Wiring errors between the segment driver and the segments or between the shift registers and the 7 segment decoder/driver will cause some numbers to be displayed incorrectly.

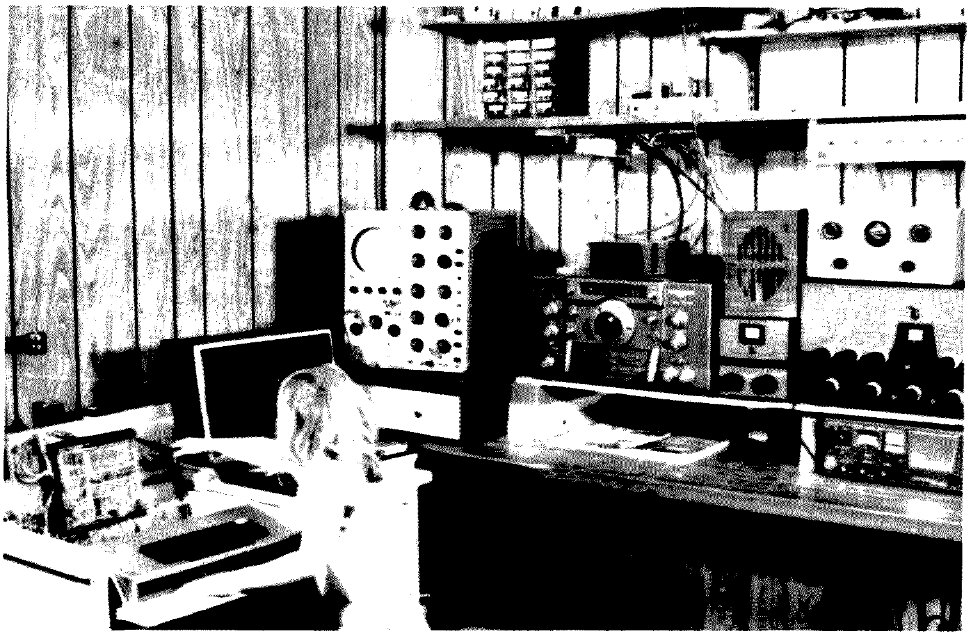

View of the station with a junior operator helping debug my microprocessor/TV display system. The .19" MAN 4 display LEDs on the received frequency counter are too small to be seen from this distance.

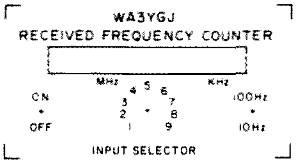

Fig. 11. Front panel screening artwork.

Conclusion

One must own and use a digital frequency readout in order to fully appreciate its value, so I won't expound on the subject. The received frequency counter is more complicated than a conventional frequency counter, but its added complexity adds more to its versatility than to its cost. It's not the simplest digital frequency readout available, but it's the only universal one I know of. To me, these points make it the obvious choice for construction by a radio amateur and I hope you agree.

All of the required ICs, with the possible exception of the Motorola MC14511CP and the Signetics N8T98B, can be purchased from *73 Magazine* advertisers. These two are readily available from their manufacturers' franchised distributors. In any case, I'm confident of being able to locate a parts source, so drop me a line if you have any problems.

I'd like to hear your comments on this article. If sufficient interest exists, a printed circuit board can be made available. ■

References

[1] A. A. Kelley K4EEU, "Universal Frequency Standard," *Ham Radio*, February 1974, p. 40.

[2] D. L. Holmes, "Wrapping and Unwrapping Tools Are Easily Made from Tubing," *Electronic Design* Nov. 8, 1975, p. 104.

How Do You Use ICs?

-- part II

Alexander MacLean WA2SUT/NNN0ZVB
18 Indian Spring Trail
Denville NJ 07834

The 7400 gate is the workhorse oscillator IC. There appear to be more circuits using this one IC than any other. It would seem the logical one to begin with.

Its full name is quadruple two input NAND gate. As many of the ads will just list it as 7400 gate, let's leave it at that. You may also see it as SN7400N or something similar. The basic thing to look for is the number 7400.

This identifies it as the 7400 series of logic. This is the transistor transistor logic (TTL or T^2L) family you want to start working with. There are other devices in the 7400 family; it just happens that the first one, the 7400, is the particular one we want.

The name tells a few things about it. First it is a gate. A computer will make much of that, but for our use it's just an identifying name. There are four of them in the package. These are identical units. This is helpful. Helps account for all those pins.

It is a NAND gate. This is a specific digital logic function for a computer. At the moment it does nothing for us, so ignore it.

Its use as an oscillator was chosen to familiarize the experimenter with the 7400. In a frequency counter the device would also be used to perform various switching or signal routing functions. The device is also adapted for mixing, product detecting, and small signal amplification.

The oscillator circuits are more complex than many of these other uses, and easier to isolate and explain. Once the makeup of the device is learned, other uses and circuits with them should be no problem for you.

The first two questions are: Where does the voltage go and what are the other pin connections? Table 1 shows the various pin connections.

Voltage is simple. Pin 14 is the Vcc pin and gets the five volts regulated. Pin 7 is the ground connection. This stays the same for all circuits using the 7400 gate.

Each of the sections has an output pin. The output is between that and ground. The input, naturally, is between the input pins and ground. Here we have a slight problem, and embarrassment of riches, so to speak.

There are two input pins to each section. This is not just an oversight by the manufacturer. They are supposed to be there, but it can be a problem in some circuits.

The oscillator circuits seem to be quite tolerant in many respects. One of the simplest is shown in Fig. 1[1]. This type of oscillator uses two gate sections.

As all of the sections are identical, it makes no difference which two are used; however, physical layout may suggest using two on the same side of the IC package.

In this oscillator circuit, both input pins of each section are tied together. Usually one of the extra sections of the IC is used as a buffer for the oscillator as shown. Here too the extra input is tied to the other.

Fig. 2[2] shows a similar circuit. In this one the extra input is left floating. Notice that the crystal and the feedback capacitor have changed position in the circuit. A trimmer capacitor

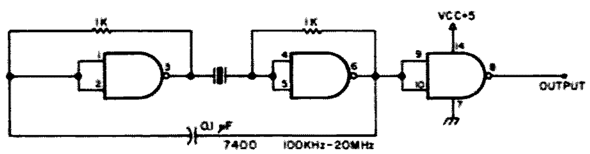

Fig. 1.

has been added to alter the crystal frequency. Notice also that the values of the two resistors are different.

There are a number of circuits which are quite similar to these two. From inspection it would appear that the circuit will operate over quite a wide frequency range. A trimmer capacitor may be added to change the crystal frequency, and the value of R1 and R2 is not too critical; values between 220 Ohms and 2.2k Ohms were common.

1. Gate One Input A
2. Gate One Input B
3. Gate One Output
4. Gate Two Input A
5. Gate Two Input B
6. Gate Two Output
7. Ground
8. Gate Three Output
9. Gate Three Input A
10. Gate Three Input B
11. Gate Four Output
12. Gate Four Input A
13. Gate Four Input B
14. Vcc +5 Volts (Regulated)

Table 1. 7400 pin connections (counted from top of device).

The original plan was to compare the performance of the various circuits and gather more definitive data about the operation and tolerances of the circuits.

Unfortunately, I quickly learned something, which none of the articles mention, that has a direct bearing in experimenting with IC oscillators.

WARNING: Testing IC oscillators can be extremely hazardous to your health! In all of the bench testing of experimental oscillator or other circuits I have done, I have never found any that caused as much or as severe TVI as IC oscillators.

Just the one little circuit powered by a transistor radio battery was enough to obliterate Walter Cronkite. It completely took out almost all stations, both sound and picture.

This meant that there was to be very little actual testing, and that confined to the more obscure hours. However, some data was obtained.

To understand why there was so much TVI, it is necessary to go a little bit into the theory of what the circuit is doing. Normally when you build an oscillator, you are trying for a sine wave output as free from harmonics as possible.

The IC oscillator is not actually an oscillator at all. The nearest thing to it in tubes would be the multivibrator circuit. It is not actually oscillating, but switching at a rate determined by the crystal. The digital ICs were built for switching purposes, and this is an adaptation of their ability to switch at high speed.

The output is a form of square wave. It may not even be a pure square wave at that. What this means is that it is very rich in harmonic content. Also, the harmonic content is at about the same level as the fundamental.

The 7400 is supposed to be guaranteed to 20 MHz and the harmonics go even higher. The lower the initial frequency, for example, 100 kHz, the worse the TVI. There are so many subharmonics.

Using a higher frequency crystal helps slightly, but there was still awful trouble with a 3 MHz crystal. As far as a TV set goes, the interference is the worst on the lower channels and seems to drop off slightly with the higher channels.

Another fun thing about ICs is that they love to oscillate all by their lonelies. Take out the crystal and the circuit still oscillates and still generates TVI.

It was not possible to determine the frequency at which this was going on, as the oscilloscope wouldn't show it. This too is something of a problem. The 100 kHz oscillator used did not show the correct pattern on the scope. It appeared that there were so many subharmonics present that the trace could not be stopped to show just the fundamental.

This IC horror story has a slightly happy ending. In actual use there may not be too much trouble with them. The basic factor in the TVI problem occurs in testing. Any meter or scope lead looks like an antenna and the thing takes off.

They also have a tendency toward some form of spurious oscillation along with the desired one. Be generous with the bypassing. The test circuit bypassed both the input and the output of the regulator and, at the same time, the IC Vcc pin.

The IC seems to find the signal it wants in all that mess. The later divider circuits seem to function at the correct frequency. It just looks like testing is going to be trouble. The test leads themselves are going to broadcast the crud.

The problem with the oscilloscope might be solved by using a triggered scope. Then the waveform might hold still for viewing.

When the test circuit was set up inside a shield, the TVI problem disappeared. All well and good, but it may still be a problem when any cable is connected to the output, for example, of a frequency standard. You may still be broadcasting harmonics to more than just your receiver.

This should also be kept in mind for inside the equipment. While the IC seems to respond to the desired frequency, there may be many spurious signals generated that will be floating around inside of the IC equipment.

The square wave is inherently a harmonically rich signal. While the specific IC it connects to may not be affected, a stage designed as an rf amplifier or other linear signal handling stage may respond to this as easily as to the desired signal coming in from the antenna.

Be prepared for TVI problems if you are going to do much testing of circuits before you use them. ICs are such that there should not be too much need to test or experiment. If the circuit is in use in a similar piece of equipment, it should be what you need for your equipment and will probably work as well.

The two circuits shown so far are quite similar in configuration. A somewhat more complex type of circuit is shown in Fig. 3[3].

Instead of the two

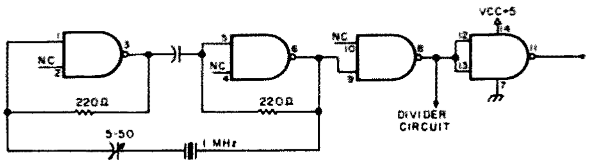

Fig. 2.

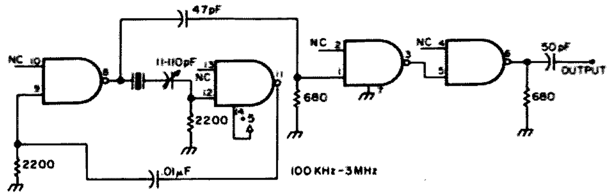

Fig. 3.

resistors being between input and output of the two sections used, the resistances are between gate input and ground.

The oscillator output is capacitor coupled to the two section buffer stage. The buffer input gate has a resistor to ground and the buffer output stage is resistively loaded and capacitor coupled.

This is another wide range circuit with a trimmer capacitor to change the crystal frequency. The only part which seemed to be critical was the 47 pF oscillator coupling capacitor. Other values around it worked, but not something like the .001 or .01 values used in some of the other parts of IC circuits.

Fig. 4[4] shows a circuit similar to Fig. 3. Here the gate outputs are connected to the Vcc pin through equal resistors. Another difference is the direct connection between the input of the first gate and the output of the second. The feedback (?) capacitor in this circuit goes to the Vcc pin. Notice the change in the usual value for this capacitor and the addition of the 150 Ohm resistor between the input and output of the second section.

The tolerance of this capacitor, while not critical, is not as broad as with some other circuits. The oscillator output is directly coupled to the following buffer stage.

While in detail these circuits do have differences in their configuration, an overall view shows that they are more similar than different. They have a number of features that are almost the same for all.

This allows us to generalize a bit about IC oscillator circuits, which will help to simplify them and make them more easily understood by inspection of the schematic.

The most common IC oscillator circuits use two gates for the oscillator section. The remaining gates are often used for buffers.

With the 7400 oscillator, it is common to leave the unnecessary gate input of each section floating. The two gate inputs may also be tied together.

Each gate section of the oscillator has a resistor of equal value. This may be between each gate input and its output pins, between input and ground, or between output and ground.

There is usually some sort of feedback or coupling capacitor of a value of .01 to .1 uF. The output of the oscillator is usually either directly coupled to the buffer stage or is capacitively coupled.

They normally operate over a wide frequency range and most circuits show a trimmer capacitor in series with the crystal for minor adjustments.

There are, of course, variations in the circuits. However, by the time these normal features are noted and looked for, what little remaining that is abnormal will be easily spotted and understood.

By thinking of these circuits as sections of this IC, it will not be long before you can recognize and place any sort of IC oscillator circuit of its type.

One thing to remember is that the circuits use two gate sections. The 7400 is a NAND gate. There are other gates that will also work and other families of ICs which will also work. The circuits will be much the same in configuration and the parts values will be similar.

There are circuits shown that are able to operate with one gate section instead of two. These should not be a problem to understand, as they are as simple as the others.

There was one example, Fig. 5[5], of a circuit that returned several of the unused gate inputs to the Vcc source pin. One gate input was used as a switch to turn the oscillator on and off by connecting or disconnecting to the Vcc source. This does not appear to be common, but it obviously can be done and might fit some requirement you have.

You will also see circuits drawn with the rectangular shape of the unit instead of the section symbols. All this requires is a look at the pin chart to figure out what goes where.

By now you should have little trouble redrawing the circuit in Fig. 6[6] to the sectionalized symbols and seeing how it resembles other circuits.

Which schematic representation is used depends on how the IC fits into the whole equipment. If it is sectionalized so that one gate may be applied to another circuit, it is more common that it be drawn that way and the sections labeled U1A, U1B, etc.

If the IC is completely used by the particular section of the equipment, it may take less schematic space to draw it as a rectangle and just put the pin numbers around the edge. There is no hard and fast rule.

The nice thing to remember is, for the most part, that you can take any of these circuits and simply drop them into the place you want them in your own equipment, with a high degree of certainty that they will work.

This leads to the next logical question: What if it doesn't work? Another nice thing about ICs is that the low voltage level and the general simplicity of the circuit make troubleshooting easier.

If you duplicate a known circuit you should have no trouble, but if you are making parts substitutions you may have to cut and try a bit.

If it doesn't work at all, the first thing to check is the supply voltage and then the wiring. Be sure you read the IC pins correctly and got the components to the right terminal.

If that isn't it, try varying the feedback capacitor value above and below what you are using. The next step would be to change the resistor pair to a higher or lower value. Be sure it is enough of a change to make a difference.

Testing the circuit

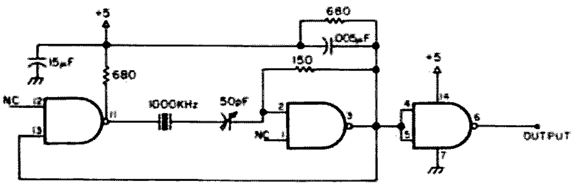

Fig. 4.

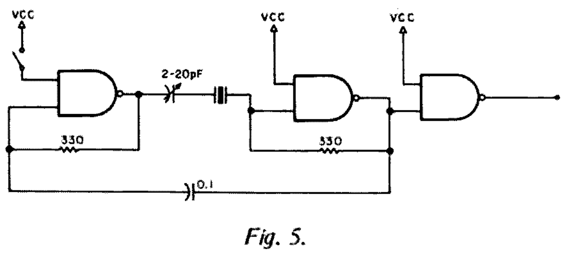

Fig. 5.

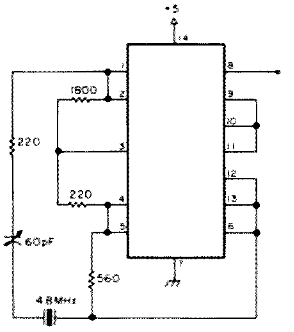

Fig. 6.

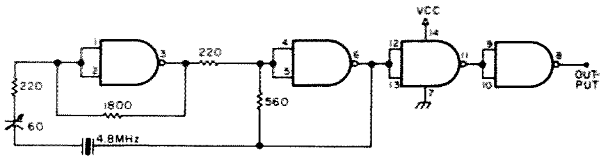

Fig. 7. (Fig. 6 redrawn.)

outboard is one way to get the bugs out. You might have a defective IC section which is easy to test by substitution before you solder the IC in. Sockets can be very handy.

It might be the crystal. Normally IC use will not damage a crystal, but some crystals are more active than others. Try another crystal in the circuit. The 7400 is designed for 20 MHz or lower so don't expect a high frequency overtone crystal to work well.

While you are breadboarding, it is not that hard to try one of the other circuit configurations. That might just solve the problem.

One of the more easily noticeable problems is a slow starting oscillator. If changing the crystal doesn't make a difference, it is most likely a question of wrong parts values. In this case, the resistances should be varied, although it might be the feedback capacitor.

As TVI is a problem, testing will have to be brief. IC oscillators are not shy about telling you if they work. A triggered scope would be the first choice, but any scope will show if oscillation is taking place, if the frequency is not too much higher than the scope will show.

You should be able to hear it on a monitor receiver, and it probably will show on your TV set. The TV set won't tell you if it is the correct crystal frequency or self-oscillation, though.

Most of the IC oscillators are designed for clock, counter or other continuously running circuits. You may have to experiment to find a circuit that works well when keyed fast, such as one used for a CW transmitter. Here the monitor receiver is first choice. If it sounds OK locally, it will probably work in the finished circuit.

With the circuits tried, it was hard to find one that wouldn't work over a wide range of parts values. Individual requirements would suggest some testing to see that all conditions are met by the oscillator before installation.

When the unit is finished, it's a fine time to find out that the oscillator won't key properly or doesn't work at all. ■

References

[1] "Using TTL ICs in Single-Sideband Equipment," Hampton, Peter J. G4ADJ, *Ham Radio*, November 1975, p. 18.

[2] "Six Digit 50 MHz Frequency Counter," Pollock, James W. WB2DFA, *Ham Radio*, January 1976, p. 18.

[3] Jan Crystals Catalog #19, 1976.

[4] "How To Become A Troubleshooting Wizard," Carr, Joseph J., K4IPV, *73 Magazine*, January 1976, p. 138.

[5] "Gated Oscillator," Schmieskors, Doug WB9KEY, *Ham Radio*, July 1975, p. 59.

[6] "A Satellite FAX System You Can Build," Taggart, Ralph E. WB8DQT, *73 Magazine*, September 1975, p. 39.

QRP Fun on 40 and 80

-- have a real ball with just 5 Watts!

Si Dunn K5JRN
3607 Binkley
Dallas TX 75205

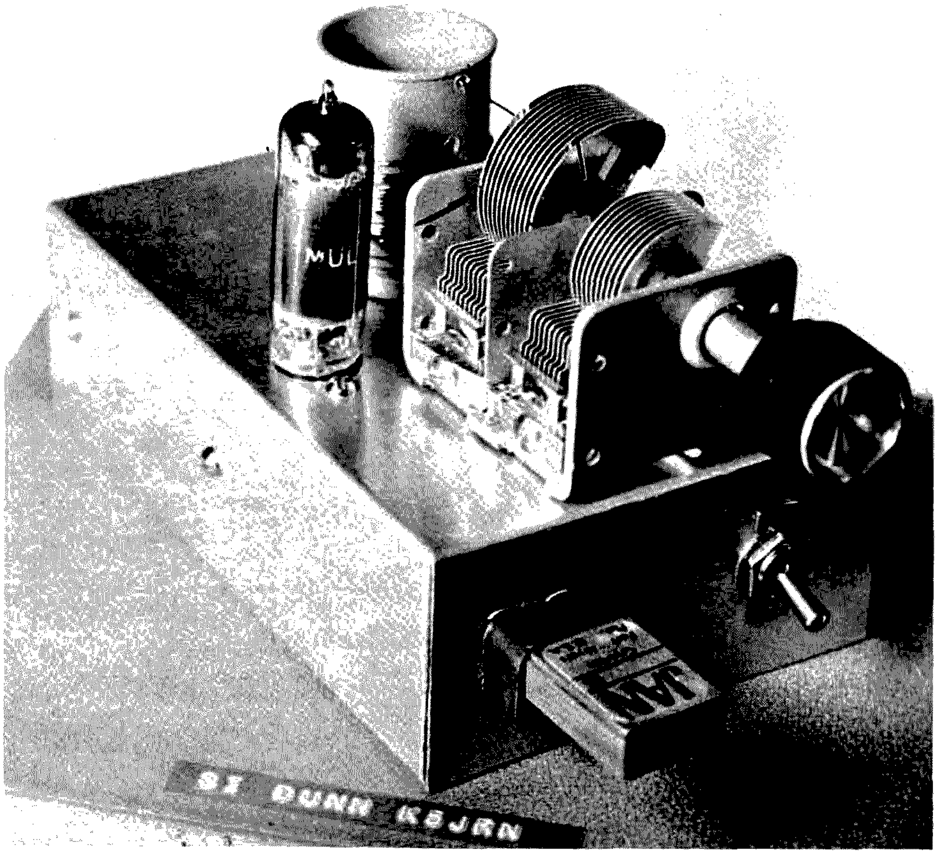

Nostalgia can do funny things to a ham. Recently, I recalled the one tube transmitter that first got me on the air as a Novice back in 1957. And before I knew it, I was doodling a schematic and looking through my junk box for parts to build a similar rig.

My first 6AQ5 oscillator was quite a peanut whistle. It put out enough rf to burn out the flashlight bulbs I link-coupled to the tank coil for tune-up. And that was enough power to work all states and some DX on 40.

The transmitter described in this article has several applications: (1) its circuitry is simple, so many beginners and "appliance operators" should be able to build it and get it on the air in a matter of hours; (2) its 4 to 5 Watt

input is ideal for QRP work; and (3) it's cheap – a good parts scrounger can build it for a few bucks at most. Even if everything has to be purchased new, the cost can be kept below $20.

I built mine straight out of the junk box and had it on the air in five hours, including the time spent in drilling and filing holes in the 4½ x 6½ x 2 inch aluminum chassis. Parts layout is not critical, but a beginner building his first rig might want to use a slightly larger chassis.

The power transformer used in this rig is rated at 15 milliamperes continuous service. However, I've experienced no difficulties while drawing 20-25 milliamperes on CW. Naturally, the key shouldn't be held down for more than a few seconds at a time while tuning up. A transformer with a slightly higher voltage and current rating could be substituted, with a corresponding increase in input power.

My third "CQ DE K5JRN QRP" brought a 579X report from a 500 mile daylight hop on 40 meters. Since then, this rig has given me hours of operating pleasure and many fine QSOs. A good antenna is desirable, but my dipoles are only 8 feet high.

While simpler transmitters can be built, this one is just about the bare minimum: no VFO, no meter and no bandswitch. Crystal control requires a bit more patience than VFO operation, but plenty of contacts can be made with just a couple of "rocks." With Novices now able to use VFOs, crystals can be picked up dirt cheap at hamfests and surplus stores.

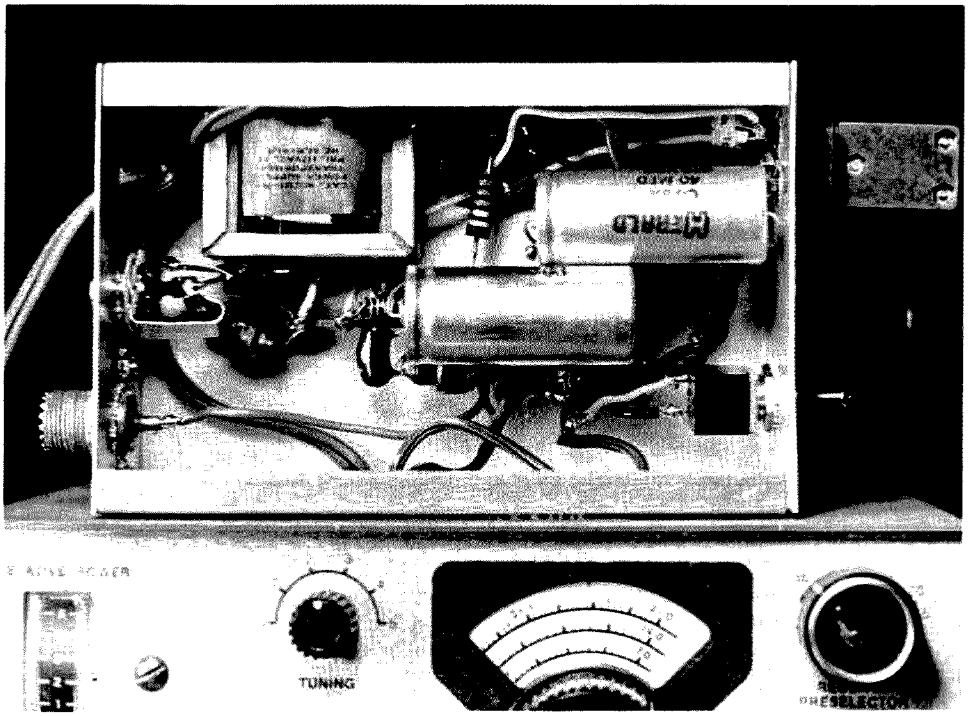

Tune-up is simple. Connect the rig to a dummy load or to a 50 to 75 Ohm antenna. Temporarily slip a two turn link soldered to a 2 volt flashlight bulb over the tank coil, and tune for maximum brilliance. The full wave voltage doubler circuit delivers about 200 volts under load, and the 6AQ5 plate draws 20 to 25 milliamperes (four to five Watts input).

Tune-up also can be accomplished with a field strength meter, if you have one, or with the forward scale of an swr bridge. If you really want to get fancy, you can add a 0-50 or 0-100 milliampere meter between RFC2 and the B plus.

The plastic form for the tank coil is one and a quarter inches in diameter. I used a film container from a roll of 35mm Kodak film. A cardboard tube also would work, and so would a piece of broomhandle. A good home brewer makes do with what he's got. Don't be afraid to substitute parts of nearby values for the ones in this circuit.

The tank coil – 15 turns of #22 enameled copper wire – and the 365 pF variable (C2) resonate both on 80 and 40 meters. Care must be taken not to double an 80 meter crystal to a frequency outside the 40 meter band. Eighty will appear with the variable's plates meshed about 80 percent, and resonance on 40 will be with the plates about 40 per cent meshed.

Trimmer capacitor C1 is adjusted for best keying characteristics while listening to a harmonic of the transmitted signal.

Early morning is my favorite time for QRP work. At 5 or 6 am, many frequencies on 80 and 40 are

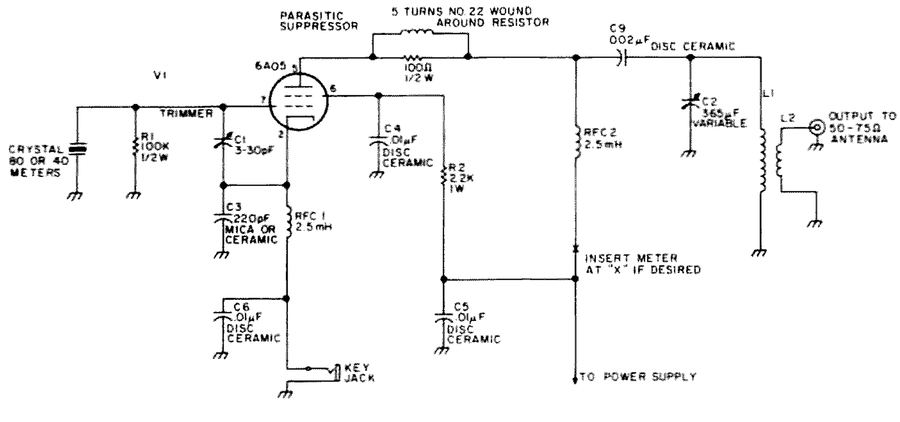

Fig. 1.

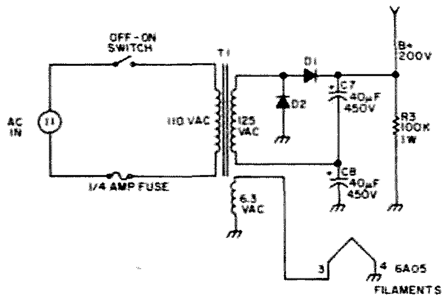

Fig. 2.

clear of signals and the skip is good for low power DXing. A short CQ and "QRP" usually results in a contact and a query: "How much power you running, OM?" ■

Parts List

Xtal – 80 meter or 40 meter fundamental crystal (Jan Crystals, 2400 Crystal Drive, Ft. Myers FL 33901)
R1 – 100,000 Ohm, ½ Watt
R2 – 2,200 Ohm, 1 Watt
R3 – 100,000 Ohm, 1 Watt
C1 – 3 to 30 pF trimmer (or similar value)
C2 – 365 pF broadcast band variable capacitor
C3 – 220 pF disc ceramic or mica
C4,5,6 – .01 uF, 600 volt disc ceramics
C7,8 – 40 uF, 450 working volt electrolytic capacitors
C9 – .002 uF disc ceramic, 600 volts.
RFC1,2 – 2.5 millihenry rf chokes
Parasitic suppressor – 5 turns #22 wire wound around 100 Ohm, ½ Watt resistor
L1 – 15 turns #22 enameled wire on 1¼ inch plastic form
L2 – 3 turns insulated hookup wire wound around cold end of L1
T1 – 110 V ac primary, 125 V ac 15 mA, and 6.3 V ac secondaries (see text)
D1,D2 – 800 PIV silicon diodes
V1 – 6AQ5, 6AQ5A or equivalent

CONTESTS

from page 11

Zone Map, DXCC country list, WAE country list and WAC boundaries are standards for the contest. QSO points are as follows: 3 points for QSO with station on different continent; same continent but different country counts 1 point, except between NA stations, which counts 2 points; contacts between stations in same country count 0 points per QSO. Final score is the result of the total QSO points multiplied by the sum of zone and country multipliers.

AWARDS:

Various certificates, plaques, and trophies will be awarded, and all scores will be published in *CQ Magazine*.

ENTRIES:

Logs must show all times in GMT, and use separate sheets for each band. Indicate zone and country multiplier only the first time worked on each band. LOGS WILL BE CHECKED! Each log must be accompanied by a summary sheet; official logs and summary sheet are available from *CQ* for a large SASE. All entries and requests for logs should be addressed to: CQ WW Contest Committee, 14 Vandeventer Avenue, Port Washington NY 11050.

SPECIAL EVENTS STATION WW9WWW

The Sheboygan County DX Association will once again operate special events station WW9WWW during the period from 0000 GMT, 12 September, 1976, through 2400 GMT, 18 September, 1976, in observance of Wonderful Wisconsin Week. Operation will be all bands 80-10, CW and SSB, on or close to the following frequencies: 3550, 7050, 14,050, 21,050, 28,050, 3810, 3910, 7175, 7280, 14,215, 14,285, 21,300, 28,550. QSL via WA9UEK, P.O. Box One, Plymouth WI 53073 USA. SASE or SAE and 2 IRCs is an absolute *must* for those wishing QSL.

CORRECTIONS

"A Test Lab Bonanza – using a transistor radio," WA7SCB, *73*, September, 1976, pages 64ff.

- page 66, column 1, line 13 should read, "as 1.5, 5, 9, etc."
- page 67, column 2, line 18 should read, "19 and you will rejoice when".

WORKED ALL MANITOBA AWARD

The Worked All Manitoba Award will be issued for confirmed contacts with amateur radio stations in specific numbers of Manitoba municipalities, local government districts, provincial parks, forest reserves, and national parks in the following classes: Class E = 50, D = 75, C = 100, B = 125. A special honor plaque will be issued for Class A, all 134. All contacts must be made after January 1, 1976. Record book, application forms, maps, rules, and conditions are available for a $1.00 fee from: Doug Bowles VE4QZ, 1104 First Street, Brandon, Manitoba, CANADA R7A 2Y4.

WORKED ALL MASS COUNTIES AWARD

Submissions must include a log listing dates, stations worked, mode and frequency. No QSL cards required. All QSOs valid including contacts through repeater stations. Station worked must be operating from county claimed. Log must be signed by another amateur certifying that the applicant has made the contacts claimed. Awards will be issued for a single band or mode if requested. A self-addressed stamped envelope must be enclosed for the return of the award. Submit logs to WR1ACT, South Shore Repeater Association, Box 284, East Milton MA 02186.

Oscar Orbits

Oscar 6 Orbital Information					Oscar 7 Orbital Information			
Orbit	Date (Oct)	Time (GMT)	Longitude of Eq. Crossing °W	Mode	Orbit	Date (Oct)	Time (GMT)	Longitude of Eq. Crossing °W
18112	1	0130:26	79.8	A	8586	1	0057:25	64.1
18124	2	0030:22	64.8	B	8599	2	0151:42	77.7
18137	3	0125:18	78.6	A	8611	3	0051:02	62.6
18149	4	0025:14	63.6	B	8624	4	0145:19	76.1
18162	5	0120:10	77.3	A	8636	5	0044:40	61.0
18174	6	0020:06	62.3	BX	8649	6	0138:57	74.5
18187	7	0115:01	76.1	A	8661	7	0038:17	59.4
18199	8	0014:57	61.1	B	8674	8	0132:34	72.9
18212	9	0109:53	74.8	A	8686	9	0031:54	57.8
18224	10	0009:49	59.8	B	8699	10	0126:11	71.3
18237	11	0104:45	73.6	A	8711	11	0025:31	56.2
18249	12	0004:41	58.6	B	8724	12	0119:48	69.7
18262	13	0059:36	72.3	AX	8736	13	0019:09	54.6
18275	14	0154:32	86.1	B	8749	14	0113:26	68.2
18287	15	0054:28	71.1	A	8761	15	0012:46	53.0
18300	16	0149:24	84.8	B	8774	16	0107:03	66.6
18312	17	0049:20	69.8	A	8786	17	0006:23	51.4
18325	18	0144:15	83.6	8	8799	18	0100:40	65.0
18337	19	0044:11	68.5	A	8811	19	0000:00	49.8
18350	20	0139:07	82.3	BX	8824	20	0054:17	63.4
18362	21	0039:03	67.3	A	8837	21	0148:34	76.9
18375	22	0133:59	81.0	B	8849	22	0047:55	61.8
18387	23	0033:55	66.0	A	8862	23	0142:12	75.3
18400	24	0128:50	79.8	8	8874	24	0041:32	60.2
18412	25	0028:46	64.8	A	8887	25	0135:49	73.7
18425	26	0123:42	78.5	B	8899	26	0035:09	58.6
18437	27	0023:38	63.5	AX	8912	27	0129:26	72.2
18450	28	0118:54	77.3	B	8924	28	0028:46	57.0
18462	29	0018:30	62.3	A	8937	29	0123:03	70.6
18475	30	0113:26	76.0	8	8949	30	0022:24	55.4
18487	31	0013:22	61.0	A	8962	31	0116:41	69.0

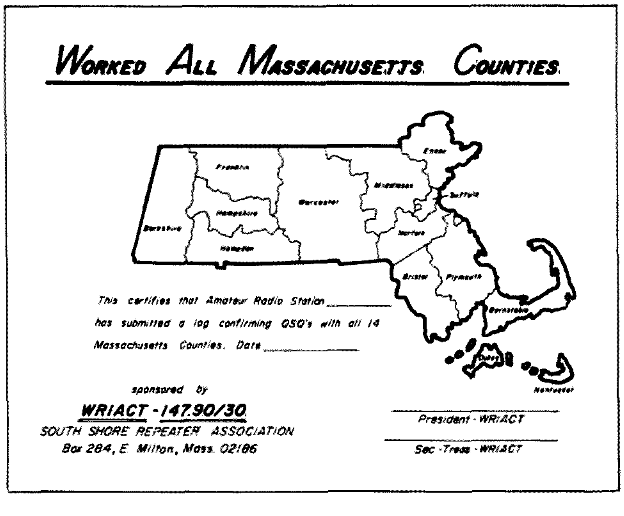

The Hybrid Quad

--has low windload, expense, hassle

The hybrid quad is a little used, little discussed antenna design that has been largely neglected by the ham community. One reason may be the lack of data available from the various texts covering antenna design. Over the past few months, the number of amateurs that have shown interest in the antenna, and the requests I have received for the specifics of its construction, have given the incentive for writing this article.

It must be noted that the design I chose is not the only possible combination in an antenna of the hybrid quad design. I do feel that the rewards of building and operating with my particular antenna demonstrated to others and myself its particular qualities over other two element arrays, especially for those amateurs looking for performance on a budget. My antenna, complete and ready to use, cost under 150 dollars. This included all hardware, coax, rotor, and a ten foot tripod.

The parameters for the basic layout are determined from studying the important characteristics of the full wave loop and the half wave dipole in their individual arrays. The spacing for the elements, especially the determination of using a reflector instead of a director, came from design characteristics of the two element yagi array. The feedline impedance and connection is that of a full wave loop array. The ARRL *Antenna Book* furnishes these basics.

Description

The true advantages of the full wave element are realized when used as a driven element. Through comparison, it was found that the noise level is lessened while signal level increases over that of a dipole. The feedline of a quad may be directly connected without any matching devices. At my QTH, it was easy to make the one and only length adjustment, from the peak of the roof that the tripod is mounted on. The only test equipment needed is an accurate swr bridge. The loop makes an excellent match to RG-11/U. Judging from the standing wave, demonstrated in Fig. 2, the two element array interacts for a feed match impedance of approximately 70 Ohms.

In all probability, the two element quad will outperform the hybrid version. There are two reasons for the design compromise. The first is cost. When working out the original parts list, I found it was far costlier to make the reflector a full wave loop. The weight would increase. The balance point would also have to be changed, and in doing this the windload of the antenna would increase dramatically. The result – the necessity for much heavier hardware, boom, and a heavier duty rotor. All of this adds to the cost of the antenna. The second point to mention would be the added fragility of the full sized quad versus the hybrid quad.

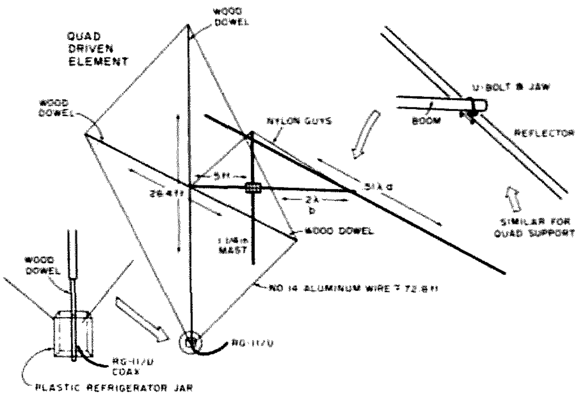

Fig. 1. a = 36', b = 13.85'. L = 1004/f(MHz). Note: Must be trimmed for lowest swr.

Due to the probability of ice and heavy rainstorms, the quad is best built in the diamond configuration. The entire structure, including the boom, is assembled from lightweight aluminum. 1¼ inch tubing is used for the boom and mast sections. The quad supports and the reflector element are made from telescoping 1 inch to ¾ inch tubing. The wire for the driven element is number 14 aluminum. The insulators are wood dowels treated with lacquer for waterproofing. They are inserted into the ¾ inch tubing ends and clamped down.

Construction

The two pieces that make up the quad structure are

Sgt. Ralph J. Volpe USAF WB8VCS/5
3333 Weir Ave., Lot #10
San Antonio TX 78226

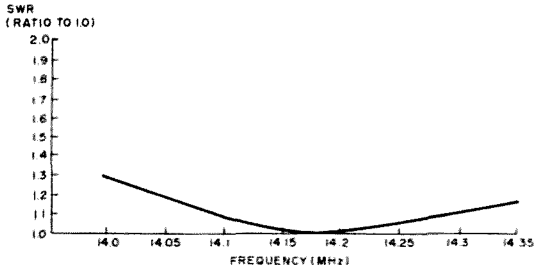

Fig. 2. Hybrid quad standing-wave chart, adjusted to 14.175 MHz.

made from telescoping aluminum sections to an approximate length of 26 feet. This can be accomplished by using a twelve foot tubing of 1 inch diameter. Into this tube you insert a section of 7/8 inch tubing. Finally, a 3/4 inch tubing can be inserted and all three adjusted for the appropriate length. Adjustable clamps used for plastic pipe can be used to make fast the sections of aluminum. See Fig. 3. The wood dowel insulators are telescoped into the end openings and clamped down. Small diameter holes are drilled in the wood dowels. The wire element is threaded through these during final assembly.

The reflector is similarly constructed. The ends of the reflector are capped with plastic furniture leg caps of appropriate size. The reflector is adjusted for the proper length and balance, then drilled in the center of the 12 foot section of 1 inch tubing. A TV type U bolt with jaw is inserted and fastened to the boom, as are the cross sections of the quad structure.

The measurements given are for 20 meter operation. They can be easily scaled for another band. If a director is used instead of a reflector, the actual spacing will be more critical. A director arrangement will show slightly more gain at its design frequency, with a more restricted bandwidth. Being more interested in ease of construction and total bandwidth, the director is ruled out and dimensions are calculated for a reflector.

A total spacing of .2 wavelengths with a reflector length of .51 wavelengths will give the best forward gain with an acceptable front-to-back ratio over the entire band, with the design frequency around 14.175 MHz. The actual gain of the array figures at 7.1 dB over a half wave dipole. This includes the gain of the full wave loop over a dipole as a driven element. The front-to-back ratio approximates 14 dB with the front-to-side ratio much larger. The Q of the antenna approximates 4.7.

The boom is made of 1¼ inch tubing 14 feet in length. As this will show some sagging, a strut type support is used from the mast to absorb the excess strain. The boom to mast bracket can be fabricated from a piece of aluminum stock with TV type U bolts and jaws. The mast is extended beyond the boom by 4 feet and nylon guys connect the elements at the ends of the boom.

A length of 36 feet is used for the reflector. The spacing from the driven element is 13.85 feet. This element should be tightened down while the array is on the ground.

For 20 meters, a length of 74 feet can be used for the wire loop for a start, trimmed for the appropriate operating frequency. If 14.175 MHz is used as the center frequency, the curve for standing waves will be very similar to the one shown in Fig. 2. The use of a 1 to 1 balun could be used to further balance the currents and flatten the swr. RG-11/U will match directly to the quad. The transmission line should be connected to the lower corner of the diamond. A plastic refrigerator container was used on my antenna to enclose the antenna to transmission line connections. A homemade toroid balun could also be enclosed in the container. If the builder would rather use 50 Ohm coax, an appropriate matching section could be employed.

The mast is connected more toward the quad element to balance the weight and windload on the antenna. A distance of from 4-6 feet may be determined by trial and error.

Operation

The moment of truth has come. The questions that arise are numerous; most can be answered by examing the reasons for its construction:

For simplicity and efficiency sake, the single band design is used.

Total cost of antenna materials and installation.

Efficiency and low angle of radiation at lower heights above ground; one specific advantage of the quad over the dipole.

A low Q design for a broad bandwidth for full twenty meter operation without prohibitive standing waves at band edges.

Possible ice and wind damage had to be considered in the structure design.

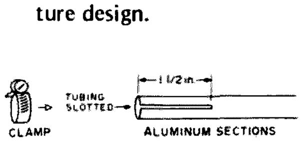

Fig. 3.

The design, construction and adjustment had to be within the capabilities of any simply equipped station.

In operation I have noticed the specific characteristics of the antenna. There is an excellent front-to-side ratio, of an average 30 or more dB in attenuation. This has been verified in reception and transmission. The front-to-back is more difficult to determine. The farther away the other QTH, the more noted is the directional attenuation. Averages range from 12 to as much as 20 dB. When short skip conditions are in effect, the front-to-back is noticeably less. Although I can only suppose, I feel this is due to a plain distance effect between the quad element and the reflector at varied radiation heights.

Conclusion

I work many DX stations with 30-100 Watts SSB. The reports I received from these amateurs are quite favorable. In the states, my signals are compared with those of stations using the full power limit. With 1000 Watts PEP I can very successfully compete in most of the DX pile-ups. My antenna is at a very modest height of 32 feet. The rotor I have been able to use without problem is an old TR-2.

I will not try to compare this antenna with those of larger design and complexity. My main desire is to open some thought to an antenna design that may be very useful to the do-it-yourself amateur. If you want an antenna that performs very well at low heights, is very efficient, easily built and adjusted, demonstrates exceptional directivity and broadbandedness, and all this at a cost most of us on a budget can afford, you may find this an antenna to strongly consider. ■

Warren L. MacDowell W2AOO
11080 Transit Rd.
East Amherst NY 14051

Frequency Detector for Your Counter

-- sounds alarm when set frequency occurs

Now that you have spent a small fortune on LED readouts, ICs, and assorted goodies, and countless hours to build that frequency counter, it is time to create another valuable addition for that basic tool.

What we are about to describe is an inexpensive device that will detect any frequency that your counter is able to display and activate an alarm of your choice (horn, gong, etc.). Even if the selected frequency occurs for only a fraction of a second, this device will trigger and lock until reset manually. The frequency desired is set with the use of inexpensive *decimal* (not BCD) type thumbwheel switches. Enough switches must be employed so as to cover the number of digits in your counter. In this manner, the desired frequency can be pre-dialed to the last cycle.

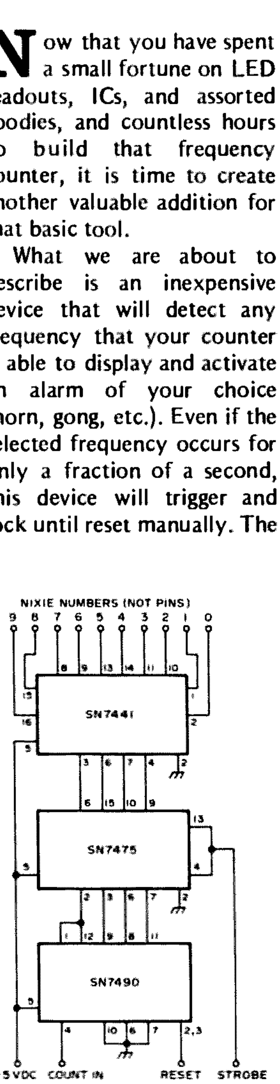

Fig. 1. Typical counter stage.

Even if the thumbwheel switches are not available, common garden variety single pole multi-position rotary switches can be pressed into service for this device.

When you are using your frequency counter to measure a transmitter VFO frequency or output frequency, an alarm such as this can be used to provide indication of an amateur band edge. Not only this, but a specific frequency can be "switched up" without even having to look at your counter or VFO dial, and the alarm will sound when you have arrived at the preset frequency. This feature would lend itself nicely for use by blind amateurs. By cutting a small notch in the "0" thumbwheel, the digits of the switch could be counted mentally by clicks until the desired digit was selected. This would make the average frequency counter usable by the blind, as he could "hear" the dialed frequency. In fact, a counter *without readouts* could be constructed for the blind amateur.

This device may be used with gadgets such as digital thermometers, clocks, etc., as an alarm. It is necessary only to have a BCD (binary coded decimal) system driving decoders for your particular type of readout. The conventional counter uses a 7490 decode counter driving a 7475 quad latch, which in turn may drive a 7441 (Nixie decoder) or a 7446 (7 segment decoder). The binary data may be taken from either the binary (BCD) output of the 7490 or the 7475. In some counters (el cheapo type), the 7475 memory is eliminated and the 7490 drives the 7441, etc., decoder directly. In these cases, the BCD information must be sampled at the 7490 BCD output. When the 7475 is included, sample at the 7475 latch BCD output. A typical counter stage is illustrated in Fig. 1. The BCD sample points are shown for both types of counters, with and without the 7475 latch.

Now that you have determined at what point BCD sampling can be made, it is necessary to obtain as many SN7441 Nixie decoder/driver ICs as your counter has digits. In other words, if you have a six digit counter, six 7441s must be used. Each decade of your counter will provide BCD data for each 7441 decoder. The 7441 decoder has a BCD input and 0-9 output. This integrated circuit translates the BCD incoming data to decimal notation by grounding the appropriate 0-9 pin. Basically what you are doing is adding an additional decoder separate from the one that is presently driving your readouts.

Rather than to feed a readout with the 7441 new

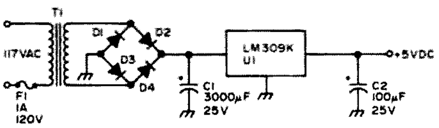

Fig. 2. Power supply. C1: 3000 mF, 25 V. C2: 100 mF, 25 V. D1-D4: 1N4002 silicon diodes. F1: 1 A, 120 V fuse. T1: 120 V ac to 6.3 V ac, 1 A filament transformer. U1: National LM309K 5 V regulator.

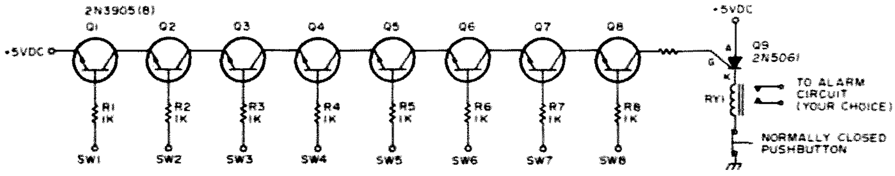

Fig. 3. Transistor-SCR alarm latch. Q1-Q8: 2N3905 PNP silicon transistors. Q9: 2N5061 sensitive gate SCR. RY1: 6 V dc, 335 Ohm coil relay (Potter and Brumfield RS5D); any sensitive 6 V dc relay will suffice. R1-R8: 1000 Ohm, ¼ Watt carbon resistors.

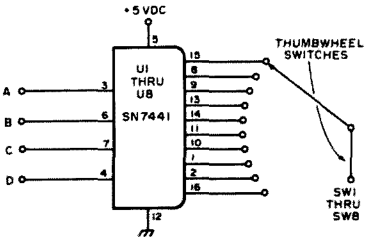

Fig. 4. 7441 drivers. U1-U8: SN7441 BCD to decimal decoders.

decoder, it now is used to "drive" the 0-9 pins of the decimal thumbwheel switch. As numbers are decoded by the 7441, a ground appears at the appropriate thumbwheel switch position. If the thumbwheel is set at this particular position, the ground will appear at the common or output of the thumbwheel.

The additional 7441s will also require plus 5 V dc for operation. This usually can be extracted from your present TTL 5 volt supply in the counter. If not, Fig. 2 illustrates a simple 5 V dc regulated supply.

Now that each of the digits in your counter chain has been sampled and is driving a thumbwheel switch, the alarm activation system comes into play. If all of the thumbwheel switches are set to a desired frequency and the counter displays this frequency, all of the thumbwheel switches will reflect a ground condition. By feeding the "common" of the thumbwheel switch to the base of a PNP switching transistor, a ground condition will cause the transistor to conduct. All of the transistors are placed in series so that when all of the thumbwheel switches reflect ground, all of the transistors will conduct, then completing the alarm circuit.

Our particular alarm circuit uses an SCR which has the ability to lock up or latch with a dc circuit (Fig. 3). The SCR will remain latched until the reset button (normally closed) is depressed, resetting the SCR. If the latch type of system is not desired, an ordinary reed type relay can be activated by the switching transistors. In this system, the alarm would sound when the counter frequency was achieved and then cease as a different frequency appeared.

Fig. 5 illustrates the pin numbers for the A, B, C and D outputs of a 7490 counter. If your particular counter does not have a 7475 quad latch (memory), these are the points at which the 7441 decoders would be attached for each digit of your counter.

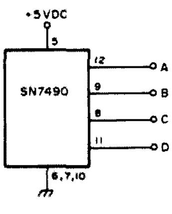

Fig. 5. 7490 wiring.

Fig. 6 illustrates the common SN7475 quad latch. If yours is of the more expensive type, the SN7475 quad latches will be employed. The SN7475 eliminates "flicker" or counting when the SN7490 counts up to its next set of figures. The SN7490 drives pins 2, 3, 6 and 7 (A, B, C and D respectively) and the outputs of the SN7475 are pins 16, 15, 10 and 9 (A, B, C and D respectively).

Once you have attached the SN7441 decoder to your particular counter, operation of this device is quite simple. All that is necessary is to dial up the desired frequency on the thumbwheel switches. When the counter arrives at this "dialed up" frequency, all of the PNP transistors (Fig. 3) will conduct also, causing the gate of the 2N5061 SCR to activate. The circuit from the anode to cathode of the SCR will also conduct, causing RT1 to close its contacts. Once an SCR "fires" it remains in this condition until the anode/cathode circuit is broken with direct current conditions. The normally closed push-button switch enables you to break the anode/cathode circuit of the SCR and "reset" the device.

Should the "latching" effect of the SCR be undesirable, an ordinary medium power NPN transistor can take the place of the 2N5061 SCR. Attach the base of the NPN transistor to the gate, the emitter to the cathode and the collector to the anode connections of the SCR placement. With this arrangement, the relay would only close momentarily as the desired frequency was detected. There would be no "latching" effect.

You will find that this device can be used with just about any binary counting device you may have built. Some common applications would be: (1) An amateur band edge detector; (2) A temperature alarm (with a binary digital themometer); (3) A pre-settable frequency detector; (4) An alarm for digital clocks; (5) A frequency counter for the blind; and, (6) A frequency limit detector for FM repeater transmitters. No doubt you will come up with many more applications for this device as digital electronics progress with amateur applications. ■

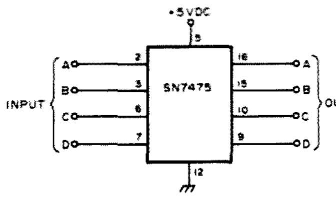

Fig. 6. SN7475 wiring. Note: There are four bistable latches in the 7475 package. The BCD binary code may be applied to any of the four latches desired. The BCD data to the 7441 decoders must correspond, however. In other words, there are no defined BCD inputs or outputs — they are up to you.

C. W. Andreasen WA6JMM
PO Box 8306
Van Nuys CA 91406

Programmable CW ID Unit

--for RTTY, repeaters, mobile, etc.

There have been many articles published on the subject of automatic identifiers. One might wonder what new could be said on the subject. Read on, and discover a circuit with the following features:

1. Uses almost no power.
2. May be used for both CW and RTTY.
3. Can be reprogrammed in less then one minute.
4. Self-contained. Only requires power and start signal.
5. Uses only 4 standard D.I.L. ICs, and one optional 8 pin minidip.
6. Runs on a single unregulated voltage source.

This whole unit is made possible by the CMOS logic family. This circuit is built around the Motorola MC14562CP, a 128 bit shift register. To make things simple, its operation can be described by saying, "what goes into the input will come out of the output 128 clock pulses later." What goes in is a "1" (high level) or a "0" (low level). When an output device such as an audio oscillator is connected, and a stored code (series of 1s and 0s) is recirculated by connecting the shift register output back into the input, this will cause the oscillator to be keyed as the data are shifted by. This code may be a simple repeater ID, or maybe a teletype test pattern. The only difference is the type of code, and the speed at which is is stepped.

Clocking

The clock signal is generated by one half of IC4. If the enabling control signals allow, the clock oscillator will free run at a rate determined by the values of R2 and C1 (refer to Fig. 1). I have found .47 uF to be a good value for the needed range, which is obtained by varying the value of R2. R2 may be a fixed resistor if a variable speed is not required. This clock signal passes through a gate which ORs with the manual step circuit. The manual step circuit is used to step through the program slowly, to examine, modify, or reprogram the contents. The manual step circuit consists of one half of IC1 crosswired with IC4, as a switch debouncer. With this circuit, each time the step pushbutton is pushed the shift register will step only once.

Control

Since the shift register has no way to know a starting or stopping point, we must add this external control. This is done by adding IC3, a seven stage counter, and IC1, wired as a flip flop. Every time the flip flop is set by a positive pulse, or the start pushbutton, the flip flop has its output set high, enabling the clock oscillator to run. With the clock running, the shift register starts stepping and the counter (IC3) counts the steps. When the final stage of the counter toggles on the 128th clock pulse, the transition causes the control flip flop to toggle back to the waiting state, stopping the clock. Since the output side of the flip flop is high any time the unit is running, this term is brought out through Q1, and Q2, to provide an external key for a transmit relay (or other logic). If only logic or some other low current load is to be keyed, Q2 may be omitted, and the emitter of Q1 grounded.

Audio Oscillator

The audio oscillator is identical to the clock oscillator, except, of course, for the frequency of oscillation. When the input pin 1 of IC4 is high, the oscillator will run, producing a tone. This tone from pin 4 of IC4 may be connected directly to a high impedance circuit, such as a microphone input, or a buffer amplifier consisting of IC5, a

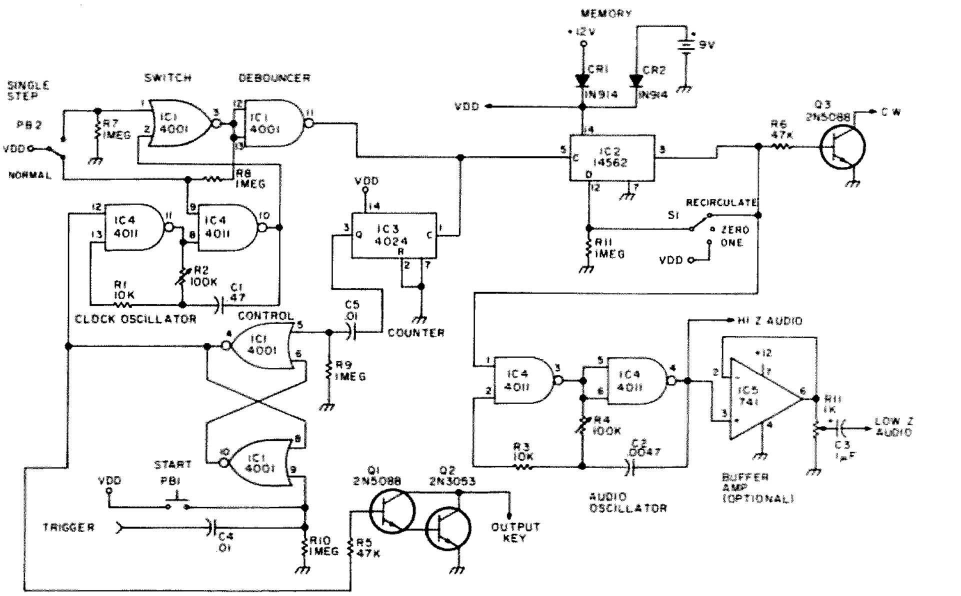

Fig. 1. VDD to power, pin 14; ground pin 7, all ICs. Standby current = 0 mA. Running current ≈ 1 mA (without buffer amp).

741 op amp. If the op amp is used, a low impedance audio line may be driven, or even a small speaker, without affecting oscillator pitch, or loading.

CW Output

If the direct CW output is desired, as would be needed in RTTY, the audio oscillator and buffer amplifier may be omitted and the output taken from the collector of Q3. A high level on the input of Q3 will turn it on, allowing the collector circuit to sink current. If the collector current to be keyed is to be more than a few milliamps, another transistor should be added in the same manner as was Q2.

Battery

It should be noted that a battery is connected to VDD through a 1N914 diode. The only purpose of this battery is to protect the contents of the shift register against loss of power. No power is drained from this battery since CMOS only draws power when it is running, and the circuit does not run without power. With power on and battery installed, the unit may be programmed and forgotten. Power may be turned off, and the unit transported, stored, or anything else, without fear of losing the program — and the battery will last for its shelf life. The entire unit may be run from a single 9 volt transistor radio battery, and, since only a few milliamps are required, the battery will last a very long time.

Programming

The best way to program the shift register is to "erase" memory by placing S1 in the program position, selecting the "0" position, and depressing the start pushbutton. This will dump the contents of the shift register into the proverbial bit bucket, leaving only zeros. Utilizing the program switch, select the desired "1" or "0" to be entered and depress the step push-button once for each step. When the entire program code has been stepped in, place switch S1 back into the recirculate position, and depress the start button, allowing the unit to cycle back to the start point. If an error has been made, it is not necessary to completely reprogram. Manually advance until error is reached, put S1 into the desired program position, step correction into the shift register, and return S1 to normal.

Many thanks to WA6CFA, who offered several constructive suggestions in the design of this circuit, and who is responsible for my switch to CMOS. ■

Parts List

IC1 — CD4001a quad 2 input NOR gate
IC2 — MC14562CP 128 bit shift register
IC3 — CD4024A 7 stage binary counter
IC4 — CD4011a quad 2 input NAND gate
IC5 — 741 type op amp (optional)
Q1, Q3 — 2N5088 NPN transistor
Q2 — 2N3053 NPN transistor
CR1, CR2 — 1N914 diode
R1, R3 — 10k ¼ Watt resistor
R2, R4 — 100k variable resistor
R5, R6 — 47k ¼ Watt resistor
R7-R11 — 1 meg ¼ Watt resistor
R11 — 1k variable resistor (optional)
C1 — .47 uF cap.
C2 — .0047 uF cap.
C3 — 1 uF cap.
C4, C5 — .01 uF cap.
S1 — Single pole double throw, center OFF toggle
PB2 — Single pole double throw, momentary contact push-button
PB1 — Single pole, momentary contact push-button
PCB — Printed circuit board, available from author ($3.50)

Pin	1.	SCEI (GROUND TO COUNT)
	2.	CLOCK (INPUT)
	3.	CLEAR (HIGH TO COUNT)
	4.	RBI
	5.	BI
	6.	RBO
	7.	DECIMAL POINT INPUT
	8.	DECIMAL POINT OUTPUT
	9.	D OUTPUT
	10.	F OUTPUT
	11.	E OUTPUT
	12.	GROUND
	13.	G OUTPUT
	14.	C OUTPUT
	15.	A OUTPUT
	16.	B OUTPUT
	17.	Qa LATCH OUTPUT
	18.	Qb LATCH OUTPUT
	19.	Qc LATCH OUTPUT
	20.	Qd LATCH OUTPUT
	21.	LATCH STROBE
	22.	MAX COUNT OUTPUT
	23.	PCEI (GROUND TO COUNT)
	24.	VCC

Fig. 1. 74144 and 74143 pin connections.

Pin	1.	CLEAR
	2.	7 OUTPUT
	3.	6 OUTPUT
	4.	4 OUTPUT
	5.	5 OUTPUT
	6.	3 OUTPUT
	7.	2 OUTPUT
	8.	GROUND
	9.	1 OUTPUT
	10.	0 OUTPUT
	11.	8 OUTPUT
	12.	9 OUTPUT
	13.	$\overline{\text{L}}$ATCH STROBE
	14.	$\overline{\text{Q}}$d OUTPUT
	15.	CLOCK (INPUT)
	16.	VCC

Fig. 2. 74142 pin connections.

Pin	1.	4 INPUT
	2.	5 INPUT
	3.	6 INPUT
	4.	7 INPUT
	5.	8 INPUT
	6.	C OUTPUT
	7.	B OUTPUT
	8.	GROUND
	9.	A OUTPUT
	10.	9 INPUT
	11.	1 INPUT
	12.	2 INPUT
	13.	3 INPUT
	14.	D OUTPUT
	15.	NO CONNECTION
	16.	VCC

Fig. 3. 74147 pin connections.

Major Robert M. Harkey W4CUG
1204 Dooley Dr.
Charlotte NC 28212

New ICs for the Counter Culture

-- simpler counters with less used power

The continued evolution of the integrated circuit industry has led to some developments which are of interest to the average electronics experimenter. Over the past few years the 7490-7475-7447 counter-latch-decoder/driver combination has been the mainstay for the construction of readout modules using either LEDs or filament type seven segment readouts. Likewise, the 7490-7475-74141 combination has been the basis for readout modules using Nixie tube readouts. The cost of these ICs has continually declined resulting in a relatively inexpensive digital display. The major drawbacks for building such a module are the PC board layout for the three ICs and the rather high current requirements. The PC board layout is no big obstacle since many have been published in electronics magazines, but the high current requirement remains. As an example, suppose you want to build a frequency counter with a six digit display and using the simplest possible circuitry. For purposes of illustration, miniature seven segment incandescent readouts drawing 8 mA per segment will be used. In the worst case condition (all 8s on the display), the readouts will draw approximately 335 mA. The counter-latch-decoder combinations will draw approximately 750 mA. Total current requirements will then be 335 + 750 mA = 1.08 Amps. This is a pretty healthy load and would be operating a regulator such as the LM309K beyond its maximum limits. Thus anything that can be done to reduce this power requirement would be advantageous.

Once again the IC industry has come to our rescue. In their TTL *Data Book For Design Engineers*, Texas Instruments lists several ICs which are directly applicable to a construction project such as a frequency counter. The first IC to be discussed is the 74144. This device comes in a 24 pin DIP package and combines the features of the 7490-7475-7447 into one IC. All internal connections available from the three IC module are available from the 74144. For example, BCD outputs from the latch, RBO, RBI, latch strobe, carry output and look-ahead counting connections are all externally available. Other desirable features are relatively low current drain (65 mA) and simplified PC board layout. The one possible disadvantage is in the counting speed (typically 18 MHz), which may be a factor if high speed operation is needed. The seven segment outputs are "active low" and can handle 25 mA, thus making the 74144 suitable for driving incandescent readouts such as Numitrons (from RCA) and other filament type readouts in addition to LEDs. Using six 74144s in our counter would reduce the 5 volt current requirements from 1.08 Amps to 725 mA, which is well within the capability of the LM 309K regulator. A

companion to the 74144 is the 74143. This IC has all the features of the 74144 plus current limiting outputs which are set at 15 mA. The 74143 is specifically designed for driving LED type displays. A base diagram for the 74144 and 74143 is shown in Fig. 1.

If your interest lies primarily with the use of Nixie tubes rather than incandescents or LEDs, TI has come to your rescue also. The 74142 contains the counter, latch and decoder/driver for cold cathode Nixie tubes and comes in a 16 pin DIP package. Only the necessary internal connections are brought out to pin connections, thus allowing use of the 16 rather than the 24 pin package. The base diagram is shown in Fig. 2. Again some savings in power consumption can be gained – typical current requirements for the 74142 are 68 mA versus 77 mA for the three IC combination. Maximum counting frequency for the 74142 is typically 20 MHz. This IC is also particularly attractive for frequency scanner applications.

Another IC which may be of interest to the experimenter is the 74147. This 10 line to 4 line encoder provides the capability of decimal to BCD decoding. In the past, if you needed a BCD code for some decimal number, either a diode matrix or a BCD switch was necessary. Both are relatively expensive and the diode matrix consumed a large amount of PC board space. Now, by using an ordinary single pole ten position switch and the 74147 IC, the BCD code can be derived directly from the equivalent decimal number. Fig. 3 contains the base diagram.

Most of the ideas presented herein were gleaned from the *TTL Data Book For Design Engineers* (CC-411) by Texas Instruments, and it is well worth the price. ■

Front view of "ERF" meters. Left: tuned input. Right: untuned input.

Edwin Hartz K8VIR
PO Box 127
Holly MI 48442

Is My Rig Working or Not?

--build an effective radiated field meter and know!

How many times during a pileup or an unanswered CQ have you wondered, *am I really getting out?* Sure, you can check modulation, transmitter voltages and currents. And if you have a standing wave ratio meter, you can also check antenna match "swr."

But what about that rf field? After all, that's what counts! When you measure your rf field, you are in fact measuring total performance of your system. You may at first think such an instrument would be both expensive and complicated. It would be if you were interested in precise measurements. But we need only relative field measurements; therefore, adequate instrumentation can be both simple and inexpensive.

The circuits discussed are of two basic types: an untuned input and a tuned input. The untuned input provided no selectivity while the tuned input will measure the field and approximate frequency.

Construction

The construction of the meters is very basic and quite flexible. As you design rf meters for higher frequencies such as the VHF bands, you should place components so that lead lengths in the rf circuitry are as short as possible. The enclosures I used were Universal Meter Cases but most any type chassis or small cabinet will be adequate. The enclosure ought to be metal as the

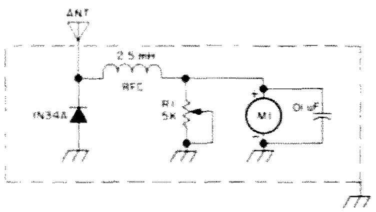

Fig. 1. Untuned circuit. M1 — Dc meter (see text). R1 — Sensitivity control.

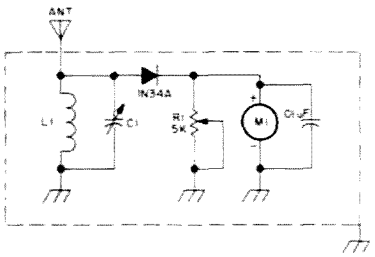

Fig. 2. Tuned circuit. M1 — Dc meter (see text). L1 and C1 — Resonant combination to cover frequencies you desire.

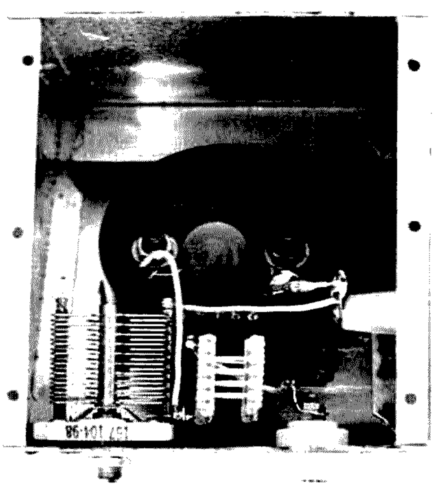

Internal view of tuned input meter.

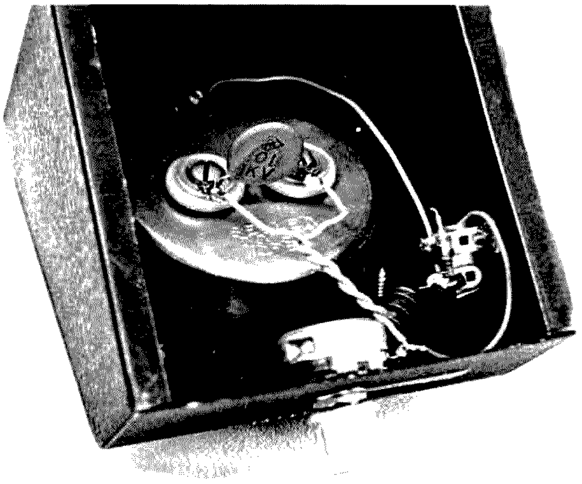

Closeup internal view of untuned meter.

circuitry should be shielded. To shield the Universal Meter Case, I used some roof valley aluminum to enclose the rear opening. It can be easily cut to size with hand scissors. You will find this available at most lumber yards or hardware stores.

Instrument Sensitivity

Sensitivity of the instrument is determined by the full scale deflection of the meter chosen. The smaller the full scale deflection, the greater the sensitivity; for example, a 0-50 uA meter will be more sensitive than a 0-1 mA meter. I used a 0-1 mA meter for the untuned meter and a 0-200 uA meter for the tuned meter.

The length of your reference antenna will also affect sensitivity: the longer the antenna, the greater the sensitivity. Also, dc resistance of the rfc will affect sensitivity. Choose an rfc with low dc resistance for maximum sensitivity.

Instrument Application

Once you have your field strength meter constructed and operating, you can begin making some reference measurements for future use.

What I do is install a small reference antenna outside the immediate area of the transmitter; it does not have to be a great distance from it. The important item is not to change the location or length of the reference antenna once you start basic measurements.

For measurements with a beam, I note and record on paper degrees of rotation "direction" and power input into antenna transmission line. With a dipole or fixed array, direction need not be recorded, but you must record input. Next, I proceed to measure field strength with the meter. I record in my log the relative reading for future reference, and if I suspect a problem antenna or otherwise, I immediately go back to my original readings and make a measurement. If you have significant energy loss in your ERF, it will show.

You will also find the "ERF" meter a valuable instrument for mobile or portable operation. ■

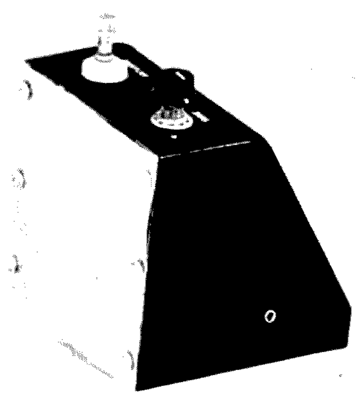

Back shielding of meter. Constructed from roofing valley aluminum.

Quickie Collinears for 15 and 10

- - satisfaction guaranteed

John Skubick K8ANG
1040 Meadowbrook
Warren OH 44484

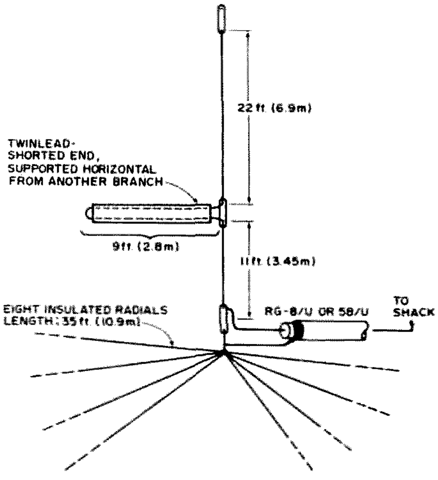

Fig. 1. 15m collinear.

I had just moved into another house. I needed two more continents for WAC, it was sleeting outside, and no antennas! This could only happen to a ham. I had to think of something!

The idea was to pack as much gain as possible into a simple antenna that I could quickly build with available leftover materials. The *ARRL Antenna Book* provided the initial data. I chose 15 meters, because my rig has only 80 Watts output. There were too many high powered boys on 20, and 10 meters was too sporadic. See Fig. 1.

Construction

The two vertical sections and the eight radials were made from carefully measured, 18 gauge, insulated, solid hookup wire. The quarter wave stub was cut (using the 0.82 velocity factor) from a piece of TV twinlead. Some old ribbed ceramic insulators I had were used at the base, stub and top.

The whole works was put together in my basement, in about one and a half hours. Then I coiled up everything, coax and all, and went out into the mid-November sleet.

Installation

One of my backyard maple trees was used as a "mast." I tied fishing line around the head of a small hammer, and proceeded to toss this up and over an estimated forty foot high branch. After about a hundred or so attempts, the line was over the branch and tied to the antenna's top insulator. This was then hoisted up until the antenna's bottom insulator (with coax and radials attached) was clear of the ground by about one foot. The bottom insulator was held in place with another piece of fishing line tied to a short stake pounded into the ground just below it. I then spread the insulated radials out along the ground, and placed rocks at their ends to keep them taut.

The RG-58 feed line was also left on top of the ground. I brought it into the basement through a small hole drilled into the metal window frame. Then I soldered a coax connector to the end.

Results

I warmed up the rig, attached it (along with the coax) to my swr bridge, and then switched it to "tune." *Horrors* – 4:1 swr! I looked outside. It was getting dark and still sleeting. I removed the swr bridge.

For the next three hours, I was working VKs, ZLs and JAs – for the first time. Just what I needed for my last two WAC continents! I left the antenna "as is" all winter.

Twinlead	Open wire
6.7 ft	7.7 ft
20 ft	23.2 ft
33.4 ft	38.7 ft
48.8 ft	54.2 ft
60.2 ft	69.7 ft
73.5 ft	85.2 ft
86.9 ft	100.7 ft
100.3 ft	116.2 ft

Table 1. Odd multiple lengths of balanced transmission line, using velocity factors of 0.82 for solid dielectric types, and 0.95 for open wire types. All lengths are subject to trimming for low swr.

I wanted to get on ten meters as quickly and as *cheaply* as possible with a gain antenna, using available materials in my junk box. After looking through my references, I reasoned that a wire-type two element collinear might just do the job. I was looking for performance at the low radiation angles. Also, I did not want to pump any rf directly into the ground from the transmission line. In other words, I wanted *no* messy, lossy (for practical amateur installations) radial system with this vertical.

Fig. 2 shows what my junk box yielded, as well as the dimensions. I used 450 Ohm TV open wire for the elements, to help broadband the system. I also decided to bring the balanced feeder all the way into the shack, because I was not about to do any outside tuning and pruning in the middle of winter. My twinlead feeder was the UHF oval-foam type. The important thing here is to use something with low loss. Open wire feed will have to be used for high power. You can use the TV or home brew variety of open wire lines.

My balun is a 4:1 toroid type. Possibly a 1:1 balun can also be used, because the feed line has to be trimmed for minimum swr anyway. If you have a tuner, no balun is needed, of course. The balanced feeder may still require a little trimming, if you are experiencing difficult loading, for 1:1 swr.

Construction and Installation

The elements were laid out on the basement floor, measured, and cut. I attached three ceramic insulators (top, middle and bottom), along with the twinlead feed line. All of this was then coiled up and taken outside. I selected one of my backyard maple trees and sighted on an estimated 35 to 40 foot branch. After the usual countless attempts at tossing a weighted fishline, I finally got it over the branch. A heavier cord was tied to this and to the top of the collinear, and then hauled up until the antenna's bottom insulator cleared the ground by about one foot. I tied the bottom insulator to a stake that was sledgehammered into the frozen ground directly below.

A "strain guy" made of fishing line was tied around the center insulator. This was to counteract the opposite pull of the (sort of) horizontally supported feed line. Some branches from another tree supported the feed line (more fishing line). At the house, the feeder was attached to TV standoff insulators (about every six feet) down to the basement window. I drilled and filed out an oversized hole in the window's metal frame, and inserted a large grommet. Purists take note. I then pushed the balanced twinlead feed line through this grommeted metal-surrounded hole.

(See Table 1, and make sure you have several feet of extra twinlead for trimming purposes.)

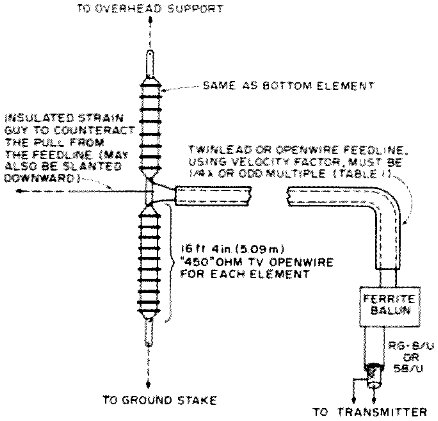

Fig. 2. Vertical collinear for ten.

The Tuneup

The rig was fired up into the swr bridge, with the balun and feed line attached. Reduced power was used at first, and a frequency sweep was made across the entire ten meter band. Well, how about that! The lowest swr (8:1 for my installation) occurred at 28.6 MHz! At that point of lowest swr, I then trimmed the twinlead for 1:1. Another frequency sweep was made. The swr was 1.8:1 at 28.005 and 2:1 at 29.65 MHz. The broadbanded construction paid off!

Results

The sporadic nature of ten meters made it difficult to evaluate. However, I was easily able to work the DX (when it was there) with my 260 Watts PEP transceiver. Needless to say, I was satisfied! ■

References

1. *Antenna Roundup Vol. 2*, Cowan Publishing Corp., pp. 16-17.
2. *ARRL Antenna Book* (1968), pp. 84, 138-140, 208.

Peter A. Stark K2OAW
P.O. Box 209
Mt. Kisco NY 10549

500 MHz Scaler

-- PC boards are available

Although integrated circuits for a 500 MHz frequency scaler have been available for a number of years, their price of $50 and up has been a stumbling block to the average ham. Recently, however, Fairchild introduced their 11C90 UHF decade counter which, at only $16 in single quantities, represents a real breakthrough for those needing a way of counting frequencies to 450 MHz and above. Although operation of this IC is only guaranteed to 550 MHz, the typical 11C90 will reach 650 MHz and beyond.

This article presents a simple and low cost prescaler using this IC which may be built for as low as $20. To ensure simplicity and low cost, an input amplifier is omitted and thus the scaler is a bit finicky as to the amount of rf it needs. In practice, it will accurately monitor the frequency of a 2 meter or 450 MHz 1 Watt walkie-talkie from a distance of about 3 feet away. Higher power transmitters can be located farther away.

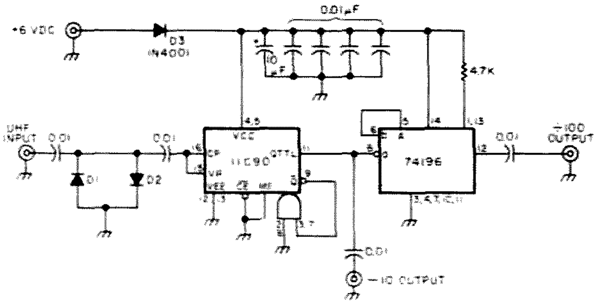

Fig. 1. 500 MHz scaler diagram.

Since the 11C90 divides by ten, the output will be in the range of about 45 MHz with an input frequency of 450 MHz. This is perfectly acceptable if you already have a counter or scaler which will cover that range. For example, the K2OAW VHF Scaler (see *73 Magazine* for June 1973) or the K2OAW VHF counter (*73 Magazine*, November 1974) make an ideal companion for this new scaler. But if your counter does not have a high enough frequency range, then this scaler design has room for an optional 74196 TTL decade counter which provides an additional division by ten. A 450 MHz input frequency will then be converted to 4.5 MHz.

Fig. 1 shows the circuit of the scaler. An input to be scaled is coupled to the CP input of the 11C90 through a simple protective circuit consisting of diodes D1 and D2. Fast switching diodes such as 1N914 or 1N4148 should be used. Actually, these two diodes don't furnish much protection at UHF; to work at UHF, special high speed diodes would have to be used. Such diodes are not only hard to get, but are also very fragile. When driven from a short antenna with a source resistance of 50-70 Ohms, they would probably burn out even before the 11C90 was in danger. Instead, we put in D1 and D2 mainly to guard against inadvertent low frequency overload, and rely on a little care on your part to avoid overload. The specified input sensitivity of the 11C90 is approximately 200 mV rms, and the maximum signal should be less than 1 volt at frequencies below 450 MHz, decreasing to less than 500 mV at 600 MHz.

The 11C90 has a built-in level converter which provides a TTL-compatible output at pin 11. If your counter covers a high enough frequency, this output can be used as is. If needed, you may add the 74196 as a second decade counter as shown.

A compact arrangement with short leads and a solid ground is needed. It is recommended that a printed circuit layout (such as Figs. 2 and 3) is used. (Etched and drilled boards are available for $7 each from Star-Kits, G.P.O. Box 545, Staten Island, N.Y. 10314.)

The entire scaler requires

less than 150 mA from a 5 volt power supply. Though a simple supply could be built, in practice a battery supply is an easier and better choice. Four D cells or a lantern battery will provide 6 volts dc, which will drop to about 5.25 volts after the 1N4001 diode. If you use four nicads, the diode is not needed as the nicads will supply 5 volts directly. But a good stiff supply is needed – penlight cells won't do.

Both ICs are very sensitive to extraneous signals on the power and ground lines. If you look at the diagram and at the circuit board layout, you will see four 0.01 uF capacitors bypassing the 5 volt line to ground. (One of these capacitors is not shown on the circuit board layout as it is soldered directly from pin 4 to pin 13 on the copper side of the board, under the 11C90.) Disc ceramics with very short leads should be used.

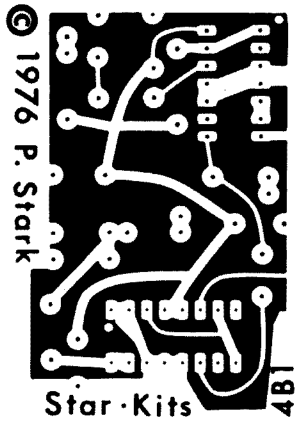

Fig. 2. PC board, foil side (full size).

The entire scaler should be enclosed in a metal cabinet with coax cable used for coupling to the counter. Batteries or power supply should also be in the cabinet to avoid stray rf on the power leads. If desired, the scaler can be mounted inside the counter cabinet.

Except for these simple precautions, this scaler is easy to build. My thanks go to Fairchild for the excellent – and cheap – scaler IC. At $20 for all the parts, this scaler circuit is an excellent value. ■

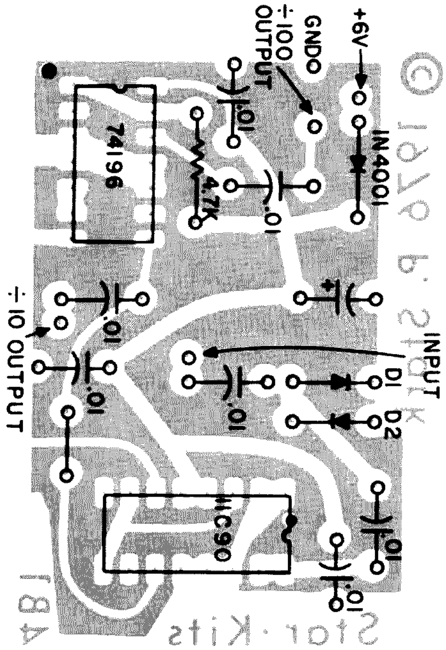

Fig. 3. Component layout.

Build a Super Standard

- - goes right down to 1 Hz

Terry Shankland WA7VVC
1909 E. El Parque Dr.
Tempe AZ 85282

With the proliferation of subbands and interference-obscured net frequencies, the use of an accurate secondary frequency standard is both good operating procedure and also helps fill our legal requirements for frequency measurement capability under FCC regulations. In addition, such a standard can be used as a timebase or signal injector to test digital logic circuits.

The WA7VVC frequency standard was designed to be a low cost answer to the need for a good secondary frequency standard. It generates marker signals of 1000, 500, 100, 50, 25, 10, 5, and 1 kHz, and 100, 10, and 1 Hz. With harmonics usable well beyond 30 MHz, markers are available to denote subband edges, align receiver dials, find net frequencies, and measure the frequency of unknown signals. Should your latest logic circuit not perk properly, two TTL level outputs are available as substitute clocks or signal injectors.

Short term accuracy is approximately 1 part in 10^6. The unit is easily aligned to WWV with a short wave receiver. An attenuator is included to permit matching signal strengths with the received signal so that a zero beat can be easily and accur-

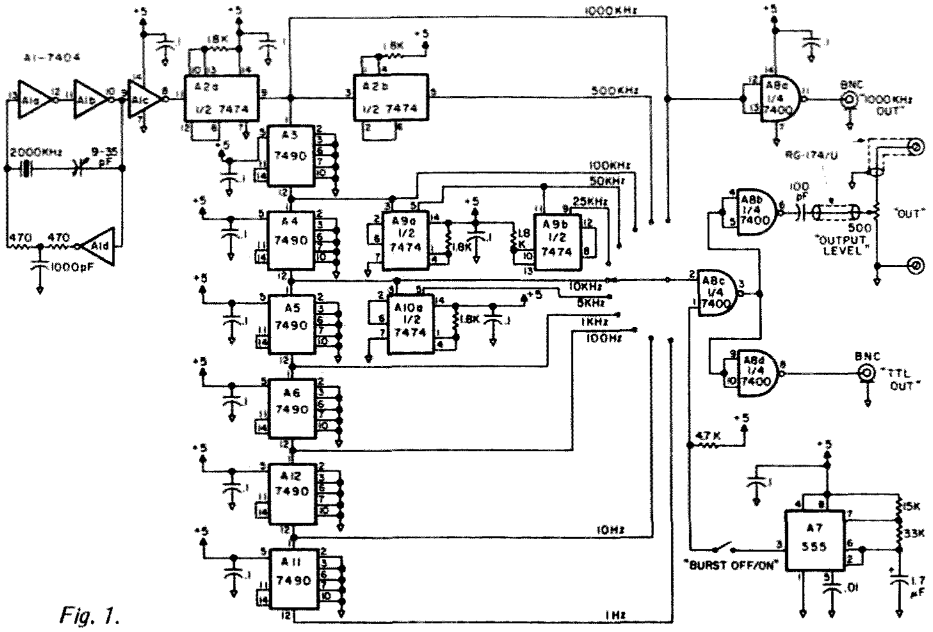

Fig. 1.

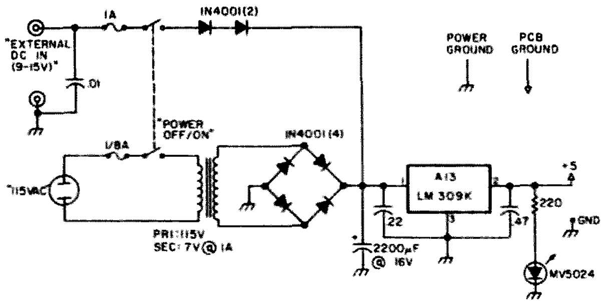

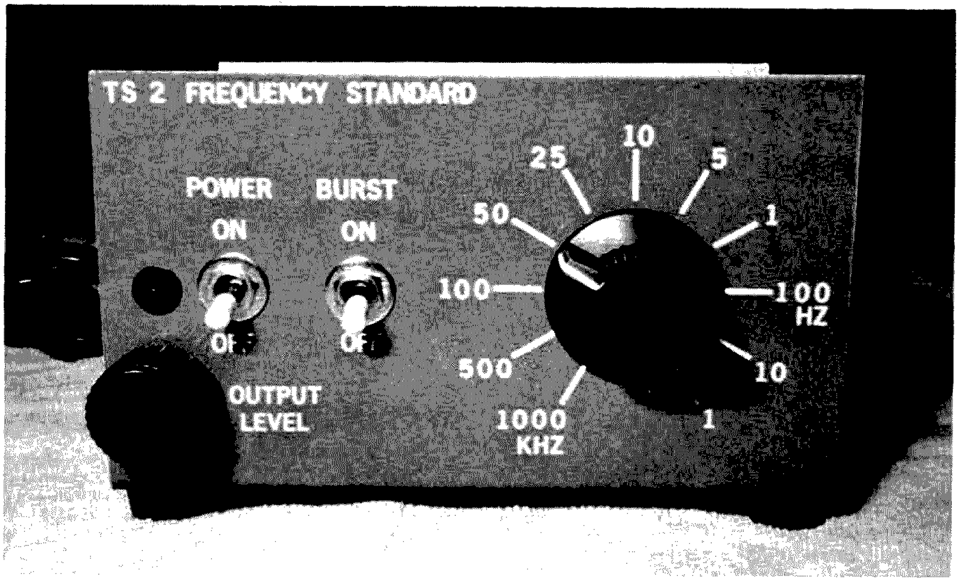

ately identified. Only one trimmer need be adjusted to align the standard.

With the standard still attached to the receiver and providing an audible measure of its accuracy, a counter or other TTL-compatible device may be attached to either TTL output and that device's accuracy checked.

A frequency burst mode is provided to allow identification of the standard's markers in a crowded receiver passband. Enabling the burst turns the output on and off ten times per second, resulting in an easily recognized "beep-beep-beep." This burst is also available on one TTL output.

An external dc input makes operation in the field possible. 9-15 volts at 250 milliamps is all that you will need to have an accurate standard available for Field Day. This is cheap insurance against FCC out-of-band citations.

Circuit Description

The active devices in the frequency generation chain are 7400 series TTL. They are readily available, easy to use, inexpensive, and capable of the fast rise times necessary for high level high frequency harmonics.

The oscillator shown in the schematic of Fig. 1 uses a 7404 hex inverter, A1, with a 200 kHz crystal as the feedback element for frequency stability. This circuit provided the cleanest output of those I tried. I happened to have a 2000 kHz crystal on hand but the circuit will work with a surplus 1000 kHz crystal. In fact, you can eliminate one 7474 package by using a 1000 kHz oscillator.

Frequency division is accomplished by 7474 dual type D flip flops A2, A9, and A10, and 7490 decade counters A3-A6, A11, and A12 wired for division by ten. The 7474s are used as toggle flip flops by connecting $\bar{Q}$ to the data input. Preset and clear are not used and are tied high through 1.8k resistors. The 7490s are ripple counters and are prone to spikes and level changes in their output. Proper bypassing of all ICs is necessary to prevent these devices from putting spikes on the power buses. The .1 uF bypass capacitors are not superfluous – use one at each IC.

The various frequency outputs are selected by a rotary switch and fed to A8c, one section of a 7400 quad gate. The selected frequency can either be passed without change or gated with the 10 Hz output of A7, an NE555 astable oscillator, producing an easily identified frequency burst at the output terminals.

Should you not have a switch with enough positions to suit your needs or just wish something different in the way of frequency selection, try the electronic switch of Fig. 2.

The NE555 timer A14 is used as an astable oscillator whose output is a train of 24 millisecond low-going pulses with a period of .81 seconds. A15a inverts this to a train of positive-going pulses. A15b and A16a gate the pulse train under control of the STEP push-button switch.

On each low-going pulse edge at pin 14, the 7493 binary counter A17 increments by one. A16b forces a reset on a counter output of 1011, permitting outputs from 0000 through 1010 to select the eleven frequencies

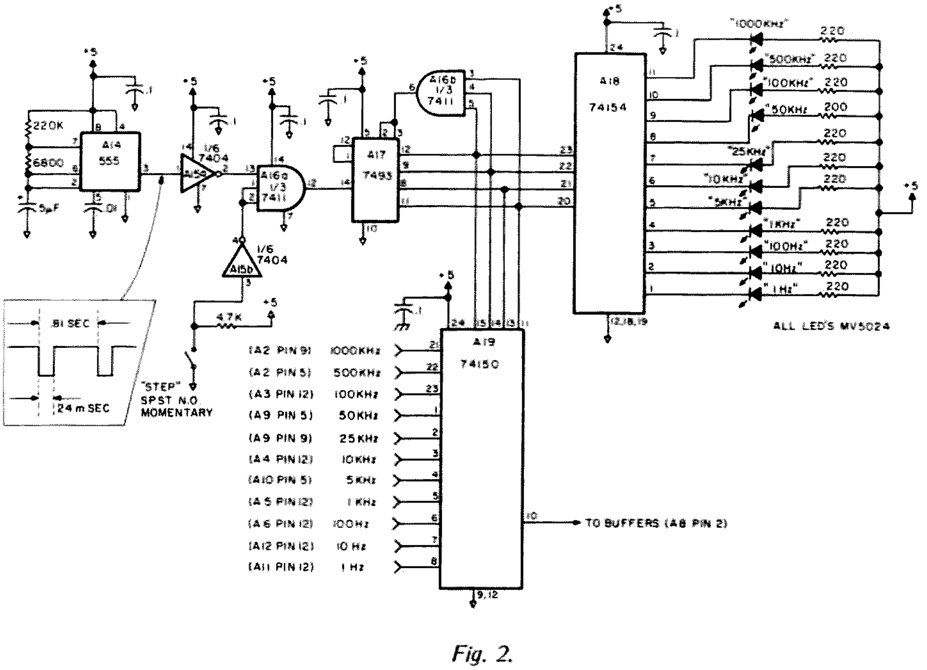

Fig. 2.

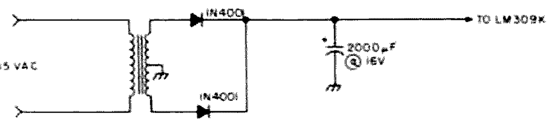

Fig. 3.

of the standard.

The binary output of A17 causes the 74150 multiplexer A19 to select a signal from its inputs to be fed to the standard's output buffers. A18, a 74154 binary to one of sixteen decoder, enables the corresponding LED.

To change frequencies on the standard, depress the STEP push-button. The standard will step through its eleven outputs, one every .8 seconds, until the button is released. When the desired frequency is reached, as indicated by its LED, you have three-quarters of a second in which to release the button before the standard steps again.

Because of the additional current required by the electronic switch, the 2200 uF filter capacitor should be changed to 4700 uF if this circuit is added.

The remaining gates of the 7400 are used as output buffers. The two used for TTL outputs will drive ten TTL loads apiece. One of these gates buffers the 1000 kHz output of A2a and makes it available at a BNC jack on the rear panel. The other takes the output of A8c, which is controlled by the frequency selector and the BURST switch, and makes it available at a BNC jack.

The output to a receiver is from A8b through a 100 pF capacitor and a 500 Ohm pot used as a signal level attenuator. Connection of the pot as shown on the schematic prevents the receiver sensitivity from being affected by the attenuator setting.

The power supply uses the ubiquitous LM309K +5 volt regulator. Since the circuit draws only 250 milliamperes, the project case can be used as the heat sink. Dissipation of the 309 is only 0.7 Watts.

Substitution for the surplus 7 volt power transformer I used is easy. Use a 12.6 volt center-tapped filament transformer in the configuration of Fig. 3.

In order to use the unit in

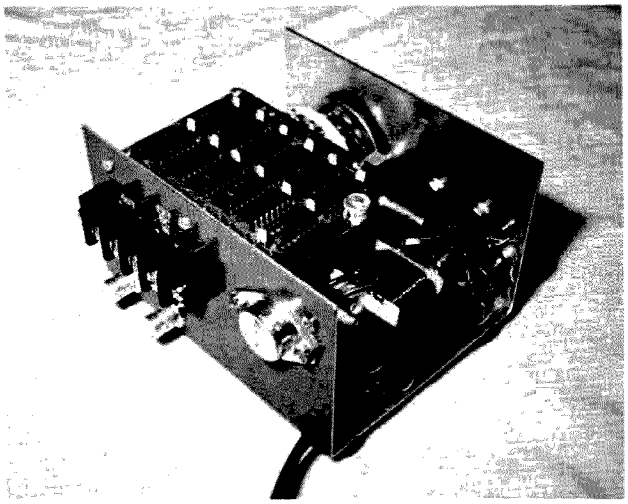

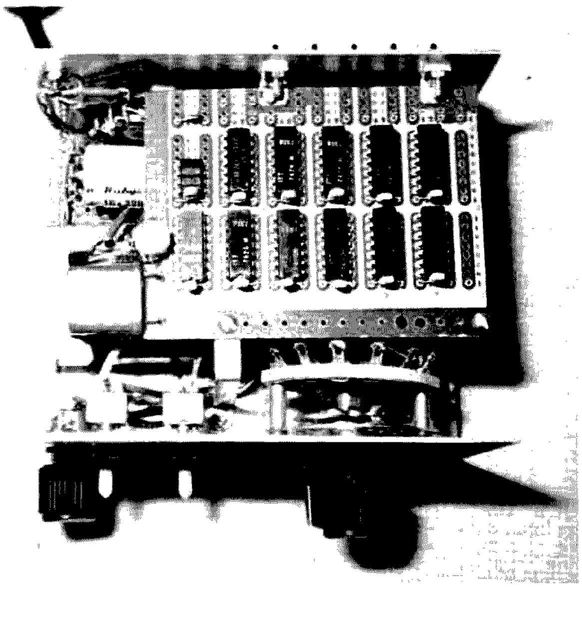

the field, provision is made for an external dc input. The .01 uF capacitor removes stray rf from the power lines and the series diodes prevent damage from polarity reversal. Two diodes were used because I feel that the 14.5 volts of a car battery under charge come perilously close to the filter capacitor's 16 volt rating. With the two diodes shown, applicable dc input voltage is 9-15 volts. With the appropriate filter capacitor voltage rating and a single diode, voltages in the range of 8 to 25 can be used.

Do not leave out the .22 uF bypass capacitor on the 309 input. It prevents oscillation of the device should a remote battery be used as a power source.

Construction

Because of the high speed switching characteristics of TTL and the high frequency harmonic content of the output waveforms, each IC is a transmitter and each interconnecting wire is an antenna. A thoughtful layout and careful construction are important to minimize unwanted radiation.

Switching transients appearing on the Vcc and ground lines can add unwanted noise to the output. I used a prototyping board with Vcc and ground planes to minimize glitches. A printed circuit board would be even better. If you wish to build the circuit with wire wrap sockets on vectorboard, use bus wire for the power leads to the sockets. An effective technique is to interleave Vcc and ground bus wires for each row of IC sockets, with a row not containing more than a half-dozen ICs.

Bus wire should also be used to connect the board directly to the 309. Do not invite problems by grounding the board to the chassis. Connect the chassis to the 309 case, the board to the 309 case, and the rectifier ground to the 309 case. This prevents the board ground from rising above the power ground and developing noise problems.

Asynchronous TTL devices such as the 7490 generate plenty of switching transients. Put a .1 uF bypass capacitor between Vcc and ground at each device socket and another at the power input to the board. Bypass the 309 input and output as shown in the schematic to prevent spikes and oscillation.

The leads connecting the frequency divider ICs and the selector switch make excellent antennas, so shield the output from the board to the attenuator pot and from the pot to the output terminals with RG-174 coax to reduce unwanted pickup. Long unshielded leads will reduce the effective control range of the pot.

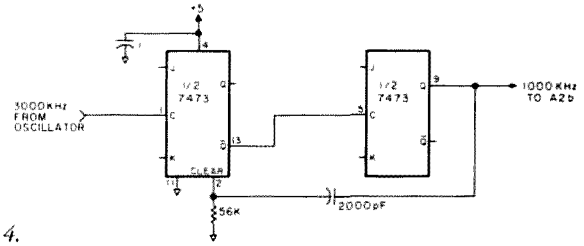

Fig. 4.

Mechanical stability will be reflected in electrical stability. Rigidly mount the crystal and trimmer capacitor close to the 7404 oscillator.

Changes

For those who would like accurate channel markers for 2 meter FM, try a 3000 kHz crystal in the oscillator. This frequency can be divided by two 7490s to 30 kHz for standard channels and then by half of a 7474 to cover splinter channels. The divide by three circuit of Fig. 4 replaces A2a to retain the outputs of the present standard.[1]

With CMOS prices falling and use of these devices increasing, you may wish to provide an output compatible with CMOS logic circuits. A 7406 open collector hex inverter package with a 2k pullup resistor could be added to interface with CMOS logic levels. Such an arrangement will have a deleterious effect on high frequency harmonic content, but will be fine for signal injection to a CMOS circuit. ■

Reference

[1] Ed Noll, "Circuits and Techniques: Digital IC Oscillators and Dividers," *Ham Radio*, August, 1972, p. 66.

W. J. Prudhomme WB5DEP
1405 Richland Avenue
Metairie LA 70001

The Incredible Lambda Diode

-- you can even make it yourself!

Do you remember the Tunnel Diode of days gone by? You may have seen it used in various oscillator and converter circuits and in other types of high frequency applications. The main reasons for using these devices were low power consumption, good frequency stability, and extremely simple circuitry. In addition to these features, it is also possible to use the Tunnel Diode as a voltage controlled oscillator well up into the VHF range. With all of these features and the availability of low cost devices, it would seem that Tunnel Diodes would find their way into a lot of circuits, right? Wrong. For one reason or another, the Tunnel Diode has not been used to a great extent in everyday electronic circuits. Perhaps they were not sophisticated enough for some designers or maybe the device was not suited for the application at hand. But for whatever the reasons may have been, we have turned to other devices, such as the FET, for oscillator circuits and other high frequency applications.

Just recently, a new circuit device has been developed that behaves like a Tunnel Diode, but has all of the advantages of field-effect transistors. The new device is called a Lambda Diode, for reasons which will become apparent later, and is the subject of this article.

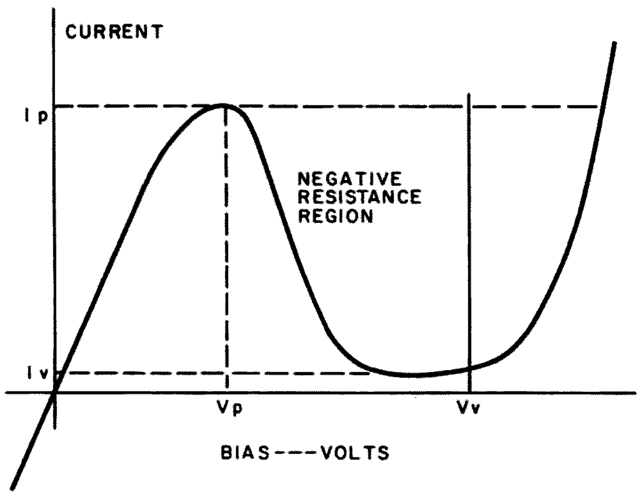

Fig. 1. Typical characteristics of a Tunnel Diode, showing the negative resistance region of the voltage vs. current curve.

Background

Before leaving the Tunnel Diode completely, perhaps a review of its characteristics will help in understanding how the Lambda Diode works and how to apply it properly.

The Tunnel Diode is a basic two terminal device that exhibits a negative resistance at certain voltages. What this means is that as the voltage across the device is increased, the current will also increase up to a point. When the voltage reaches this particular value, the current through the device will level off. Then any further increase in voltage will result in a proportional decrease in current through the device. This characteristic is illustrated in Fig. 1.

The negative resistance is the result of the diode having a small p-n junction with a high concentration of impurities in the p-type and n-type semiconductor materials. Having a high impurity density makes the junction depletion region narrow so that the electrical charges can transfer across the region at almost the speed of light. This effect is called "tunneling" and was first discovered in 1957 by Dr. Leo Esaki when he announced the results of his experiments dealing with highly doped p-n junctions. This was the first time a negative resistance device was produced, although the tunneling effect was predicted mathematically as early as 1929 by three physicists.

It is this tunneling effect in the negative resistance

region on the characteristic curve of the device that makes it possible to achieve amplication, pulse generation, and rf energy generation.

While the Tunnel Diode held great promise when it was first introduced, it seems to have been sidestepped in our race for better and more efficient devices. Perhaps it deserves a closer look by many of us who have forgotten how easy it is to use in designing electronic circuits. Coming to our aid in this regard is a new device that brings the negative resistance circuit element into a new realm of activity. The new device is called the Lambda Diode and it appears to have a very exciting future.

The Lambda Diode

Like its tunnel diode counterpart, the Lambda Diode is also a two terminal device, but it is constructed with a pair of complementary depletion-mode junction-field-effect transistors connected as shown in Fig. 2. According to manufacturers of the device, it is easier to fabricate than conventional devices and it can be produced on one chip along with other devices. However, unlike Tunnel Diodes, Lambda Diodes are not limited to a narrow resistance region and consequently can be produced with a wide range of characteristics.

Although these devices are too new to be available on the surplus market, it is possible to build your own Lambda Diode from a complementary pair of JFET transistors. Fig. 3 shows the general layout for the Lambda Diode constructed from an n-channel and a p-channel JFET available from Radio Shack and other suppliers.

The name for the device is derived from the shape of its voltage-current characteristic curve, as shown in Fig. 4. Like the Tunnel Diode, when a positive voltage is applied to the anode of the Lambda Diode, the current through the device increases until the applied voltage reaches the pinch-off voltage of one of the devices. At this point on the curve, the voltage is called the peak voltage, Vp, and the peak current is Ip. Increasing the voltage further will cause the current to decrease until the applied voltage is equal to the sum of the pinch-off voltages of both JFETs. At this point, the voltage is referred to as the valley voltage, Vv, and both of the JFETs are cut off. Current draw in this state is low (in the order of a few nanoamps) and this feature makes the device a good choice for low power consumption applications. This minimal current will be limited for further increases in voltage until breakdown of one of the gates occurs.

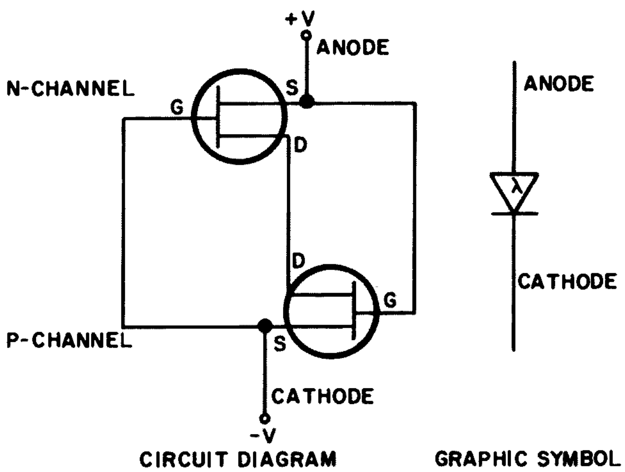

Fig. 2. The Lambda Diode is a two terminal device consisting of a pair of complementary depletion-mode junction-field-effect transistors connected as shown.

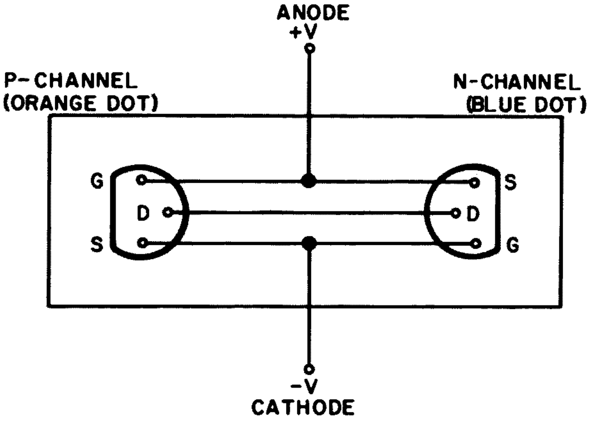

Fig. 3. This is a top view showing how two complementary transistors are connected to form a Lambda Diode. JFETs from Radio Shack (276-112) were used in this instance, although a 2N4360 or similar could be used for the p-channel and a 2N3819 or similar could be used for the n-channel.

The basic characteristics of this diode make it useful for many applications including oscillators, transistor protective circuits, battery monitors and many other circuits requiring low "off" states at high voltages.

Lambda Diode Applications

One useful application for the Lambda Diode is an electronic fuse that is non-destructive, fast acting and provides low current protection. Three such protective circuits are shown in Fig. 5. When an abnormally high voltage is applied to the power transistor, the diode will move into its negative resistance region, effectively cutting off bias to the transistor and allowing it to turn off and protect itself. For higher current applications, the diode can be connected in Darlington fashion as shown in Fig. 5(b). Similarly, for higher voltages, it can be connected as a sensing element to control a particular transistor as shown in Fig. 5(c).

Battery Voltage Monitor

Since the diode displays a bistable switching characteristic with almost zero standby current draw, it also makes a good battery voltage monitor. Simply connect the Lambda Diode as shown in Fig. 6, using a 2N2222 transistor and any LED as a low voltage indicator. Voltage measurements on the two JFETs I used resulted in the LED being switched on at 8.7 volts. This "switch on" voltage was found to be ideal for devices powered by a 9 volt transistor battery. However, you can change this transfer point by selecting JFETs with higher or lower pinch-off voltages than the ones I used.

In this particular circuit, as long as the battery stays in its normal operating range, the device will not draw any current due to its excellent "off" state characteristics. For this reason, the Lambda Diode makes an ideal battery voltage monitor.

Power Failure Monitor

Another application for the Lambda Diode is a power failure monitor as shown in Fig. 7. This particular circuit

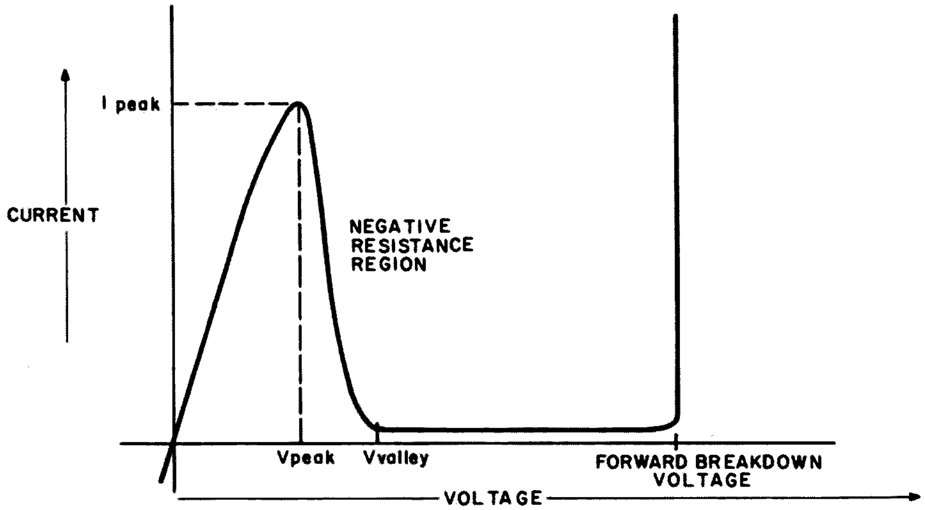

Fig. 4. Like the Tunnel Diode, the Lambda Diode displays a negative resistance characteristic when its bias voltage is increased past the peak shown on the graph.

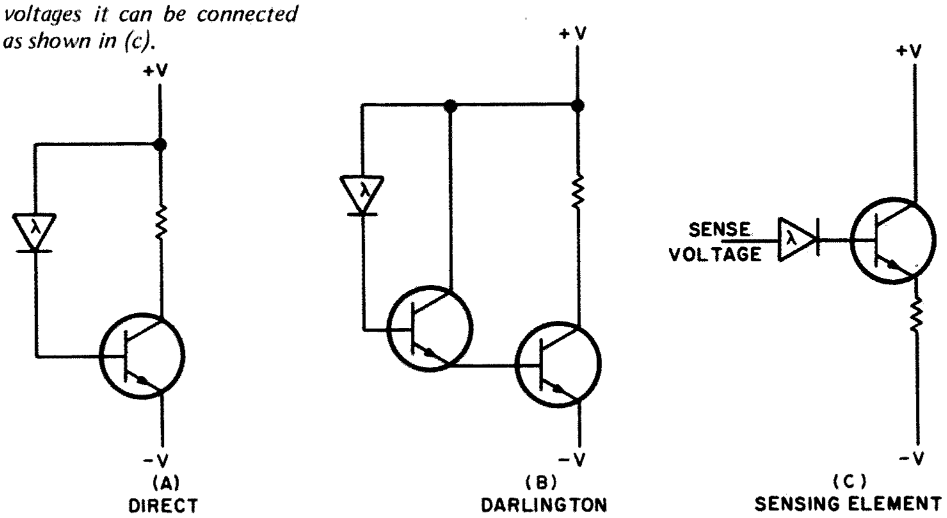

Fig. 5. The Lambda Diode makes an excellent electronic fuse when it is used to supply bias to the transistor it is protecting. An increase in current will cause the voltage drop across the collector resistor to increase, turning the Lambda Diode off. This will in turn cause the transistor to stop conducting. For higher current capabilities, it can be connected in Darlington fashion, and for higher voltages it can be connected as shown in (c).

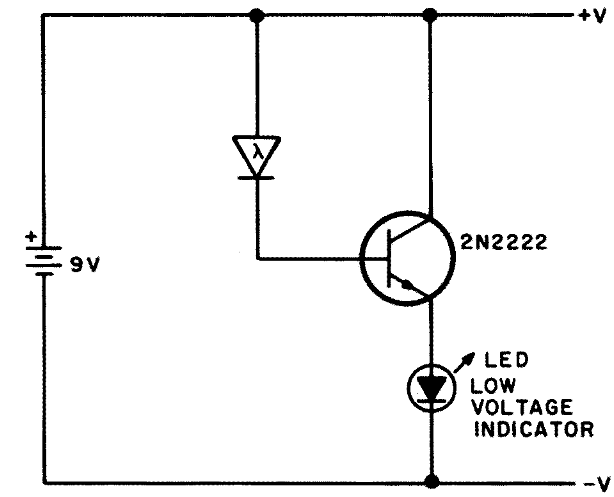

Fig. 6. Battery voltage monitor. With the Lambda Diode I was using, the LED would turn on at 8.7 volts, which makes it ideal for a 9 volt transistor battery. However, by using other JFETs with different pinch-off voltages, it may be possible to raise this transition voltage to monitor other power supplies.

will find application in products such as digital clocks, security systems, and computer operations. Basically, two transistor drivers are connected to LED indicators, with one transistor biased by the Lambda Diode. Under normal operating conditions, the diode is off, keeping transistor #1 turned off. Under these conditions, only transistor #2 is on, with the green LED indicating a "power on" condition. When a power failure occurs, of course, both LEDs will be off for the duration of the power failure. Then when power is restored, the Lambda Diode will be "on" causing the red LED to come on, indicating a power failure has occurred, and the green LED will be off. After the reset button is pushed, the red LED will go off and the green LED will turn on. Since the diode is fast acting, this circuit will also detect momentary outages in the nanosecond range.

Basic Oscillator

Being similar to the Tunnel Diode in many respects, the Lambda Diode will also find many applications as an oscillator in af, rf, and dc-to-ac converters as shown in Fig. 8. Since the diode is so efficient, it draws very little current and consequently there is very little internal heating of the device. This results in excellent temperature stability, and it's a natural as the basic active element in a vfo or local oscillator.

Building a basic oscillator circuit is simple — all you have to do is add an LC tank circuit and a 6 to 12 volt power supply. The actual value of the supply voltage will depend on the particular JFETs you use to make up the Lambda Diode. However, the actual voltage is not critical as long as you bias the device in the negative resistance region of its characteristic curve.

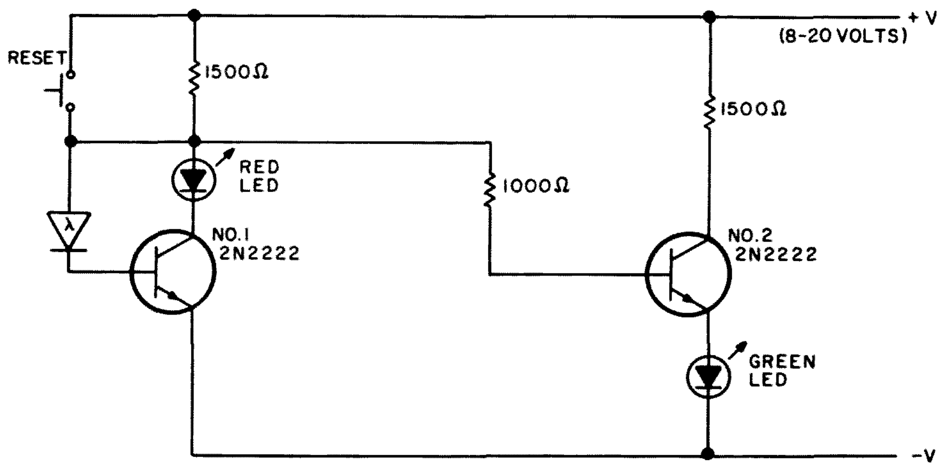

Fig. 7. Power failure monitor. This circuit will indicate a power failure on a bus between 8 to 20 volts. As long as this voltage is maintained, only the green LED will be on. If the power fails and is later restored, the green LED will turn off and the red LED will remain on until the reset button is pressed.

There are many applications for a simple oscillator of this type, from QRP transceivers to dip oscillators, signal generators, antenna testing devices, radio control applications and whatever you want to dream up. It's also possible to amplitude modulate the device, with a tone or voice, with excellent results. Although I have not tried SSB or FM with the device at this time, I feel reasonably sure that the oscillator will work here, too.

Since the Lambda Diode maintains an almost infinite impedance in its valley region, very little energy will be absorbed from the tank circuits. This is the basic reason why the Lambda Diode is so efficient as an oscillator and can produce an output amplitude voltage of twice the supply voltage. Also, because of its efficiency, the output amplitude will remain constant over its operating frequency range, even when the capacitance in the tank circuit is varied to change the frequency. This feature alone would make the device an excellent choice for a dip oscillator circuit.

Future Possibilities

Being a relatively new device, the potential applications are just beginning to emerge. Experimentation is presently being conducted on combining the Lambda Diode with other devices, as well as connecting two devices in series with similar polarity orientation (and also with opposing polarity orientation). The characteristics produced by such circuits are proving to be very interesting.

There is also the possibility of using the diode as the basis of a new memory cell which is only two-thirds the size of conventional CMOS memory cells. Since the Lambda Diode operates as a flip flop, only one bit line is required to activate the cell. By incorporating two additional MOSFETs, a new CMOS memory cell can be made using a total of four transistors as opposed to the six now required for conventional memories.

Regardless of how the Lambda Diode is used, it is evident that this versatile device is capable of performing many useful tasks. How well we use it will depend on our own ingenuity. ■

Reference

Kano, Iwasa, Takagi, Teramoto, "The Lambda Diode: A Versatile Negative Resistance Device," *Electronics*, June 26, 1975, page 105.

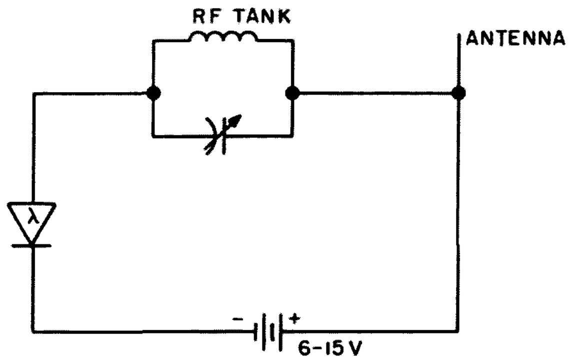

Fig. 8. Basic oscillator. To construct a small, low-powered signal source, all that is required is the Lambda Diode, an LC circuit tuned to the proper frequency, and a power supply. The oscillator may also be tone-modulated with excellent results.

Bill Gulledge K5UAR
Route 1 Box 264-A
Downsville LA 71234

Mechanical RTTY Buffer

--using a tape punch and a clock

If you are active at all on amateur radio teletype, it is almost certain you have seen someone sending with that nice, even tempo which usually means he is using a buffer of some sort between his keyboard and transmitter. Recently there has been a fine solid state device for this purpose described in the *RTTY Journal.*[1] However, if you are interested in a cheap and dirty way to get the same type of transmissions, this article is for you.

Referring to Fig. 1, you can see it is really a simple device. It uses one of the NE-555 solid state timer chips, and very little else. What we have is actually a free running multivibrator, the speed of which can be varied. The one I built will go down to about one character every fifteen or twenty seconds, all the way up to full machine speed. There are provisions made for bypassing the buffer entirely, also.

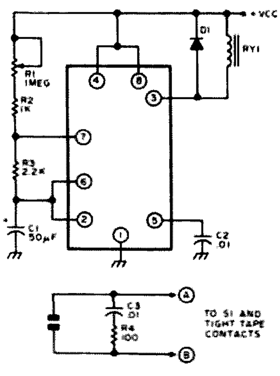

Fig. 1.

R1 is the speed control, R2 is necessary to prevent exceeding the voltage rating of pins 6 and 7, and R3 determines how long the relay will hold in. This can be varied to suit your own needs; the higher the resistance of R3, the longer the relay will hold during each pulse. This time period must not exceed 163 milliseconds, if using 60 words per minute (45.45 baud). If this period is exceeded, more than one character will be tripped off at a time.

RY-1 is any relay which will operate on the voltage you are putting on the NE-555. In my case, it is a six volt dc, single pole, single throw relay – a cheap one I had in the junk box. The filter across the contacts of the relay is used to cut down on the arcing while the buffer is in use. Since you are switching 115 V ac, there is quite a bit of arcing if this is not used, and the contacts will not last as well.

The output of the buffer is connected in series with the tight tape contacts in your transmitter-distributor (T.D.). This allows these to remain in the circuit just in case you set the speed of the buffer too high and the T.D. catches up with the tape you are sending.

Construction is by no means critical. I built mine on perfboard, but a small printed circuit could easily be fabricated. Mine is bolted to the inside of the model 19 table, using standoffs, with the control switch and speed control pot through the side of the table where they are easily accessible.

This unit can be used with any automatic send-receiver (ASR) machine. Set the keyboard for "tape only," and get enough slack in your tape to feed the end into the T.D., under the tight tape control rod. Turn on the switch which activates the pulser and set the speed control to a point where you can at least keep up with the sending rate. If you are far enough ahead, you can backspace and correct errors before they are sent. Your machine will now transmit smoothly and steadily, and your printer will show what is sent, and when.

By using this method you have one advantage over the solid state unit. That is, you have a tape of what you have sent in case QRM takes out a lot of it, and it can be sent again, either slowly or at full machine speed. The mechanical buffer is a bit noisy, but it does the job. Mine has been in operation for several months without any problems.

Fig. 2 is the simple power supply I am using. The NE-555 only requires about 3 milliamps, so the rating of the transformer is almost entirely dependent upon the current requirements of the relay you use.

My thanks to Bob Crumley K4DXR, who gave me the original idea for this unit, and for his encouragement to build it. ■

Reference

1 "UART," Hoff and Nurse, April 1974, ***RTTY Journal,*** and "Using the UART," Hoff and Nurse, May 1974, ***RTTY Journal.***

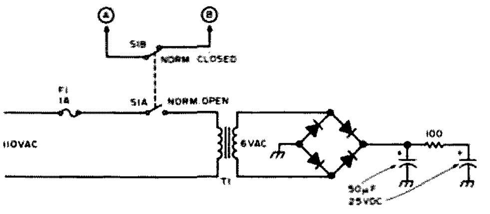

Fig. 2. Note: S-1 is a double pole, double throw switch wired so when the ac is off the other set of contacts short out the contacts on RY-1.

P. Scott Smith WB9JSE
7723 W. Bender Ave.
Milwaukee WI 53218

Have You Used a Triac Yet?

-- nifty solid state ac relay gadget

It's easy to switch dc off and on with a transistor, but what do you use to switch ac? A relay would work, but this is bulky, and consumes power to perform its work. An SCR would work, except that it can only conduct for about half the applied sine wave, resulting in half voltage being applied to the load. Or you could use two SCRs, connected back to back. However, this configuration is already available in one package known as a triac.

A triac is much like an SCR, except that it will conduct for very near 360 degrees. Triacs have three terminals, normally called Main Terminal One, Main Terminal Two, and Gate. MT1 and MT2 can be considered the normally open contacts of a relay, and the gate the coil of that relay. (Figs. 1 and 2.)

To activate the triac, trigger current is applied to the gate. This current can be either polarity dc or ac. Once the triac has turned on, current on the gate can be reduced to a much smaller value, called holding current. MT1 and MT2 will remain "closed" as long as gate current is at least this value. If gate current is removed, MT1 and MT2 are again isolated.

To operate a triac as a switch, we want it to be on for 360 degrees of the applied sine wave ac. For this condition, gate current must be at least the value required to operate in mode III positive. For instance, the RCA type 40668 is rated at 8 Amps, 200 volts rms, and requires 80 mA gate current for this mode.

Let's suppose we have built a high power linear amplifier, complete with safety interlock switches. These could be small microswitch types, wired as in Fig. 3. Resistor R is found by dividing gate current into gate voltage. Before the switch is closed, gate voltage will be 120 volts. Using 80 mA for gate current, we get a value of 1500 Ohms for R. To be on the safe side, use five to ten times the required gate current, or one fifth to one tenth the value of R. In actual use, any value from 100 to 500 Ohms will work well.

If R is replaced with a photocell, the triac can be turned on with a beam of light. When the cell is dark, its resistance is high, typically 1-3 megohms. When in bright light, the cell resistance drops to somewhere around 150 Ohms. A small lamp, taped tightly to the cell, will allow full isolation of the signal voltage from the triac and ac being switched. Any CdS cell will do, and suitable small lamps, called grain-of-wheat lamps, can be found at most hobby shops. See Fig. 4.

The lamp could be driven by a small signal transistor in your terminal unit, and the triac could directly switch ac to the TTY motor, for auto-start. A switch could parallel the photocell to allow running the motor as in a local loop.

Fig. 1. Triac symbol.

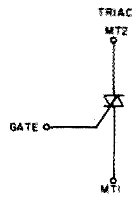

It is generally a good idea to put a resistor and capacitor in series across the main terminals of a triac to suppress any transients caused when the triac fires. Those transients could cause the triac to switch on or off randomly, or give sporadic operation. Ten Ohms and a .01 cap will do quite well, although these values aren't critical. These are only a

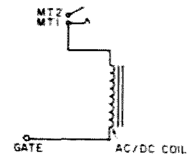

Fig. 2. Electro-mechanical equivalent.

couple applications for triacs. They can be used anywhere a relay could be used, and are priced low enough to be competitive with a relay capable of handling an equivalent current. Of course, they have no moving parts, are small and light, and are well suited for printed circuit board applications.

For much more detailed information on theory of operation, and ideas for zero voltage switching and light dimmer circuits, consult the RCA manual, "Thyristors, Rectifiers, and other Diodes." ■

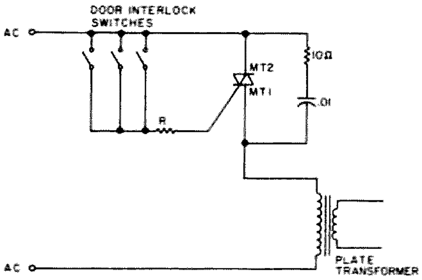

Fig. 3. Door interlock using triac.

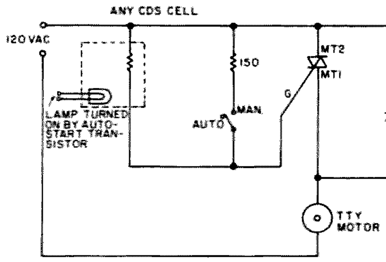

Fig. 4. Optically-isolated switch for TTY.

Ham Help

I am greatly frustrated!!! You and the locals in Lafayette, Ind., are always trying to increase the numbers of amateur radio operators. Well, I used to be a Chicken Bander with bootlegging capabilities using a Siltronix 1011C and a Tempo One that had been converted for CB band. Those days are over with; all I have now is a Yaesu FR-101S receiver with all the bands plus 2 & 6 meters. So I did two more things. They are as follows:

1. Subscribed to your funky magazine.
2. Bought a U.S. callbook.

After monitoring 80 and 2 meter bands and logging a lot of local ops, I looked them up in the callbook. Then I would match the list with the local telephone book. And I was shocked to find with a lot of them that they were too busy, not at home, etc., etc. Excuses, excuses; wake up Lafayette, Ind. This kid wants to join the ranks of an amateur. I think I am getting the point across, but I guess the point is not motivating the amateurs in Lafayette, Ind. With Godspeed, I hope I can say that I am an amateur in the near future.

William A. McQueen
1419 South Street
Lafayette IN 47905

I will shortly be receiving my Novice license and I would like to hear from other hams concerning indoor antennas to be used in apartments where no balcony is available. I am not allowed to string any outdoor antenna systems. I would appreciate a sketch of any appropriate antenna capable of working on 80, 40, 15, and 10 meters.

I will be running 180 Watts and will have a transmatch available for matching to my transceiver. I hope someone has some good suggestions for me.

I would also like to be added to the list of ham helpers. I will give anyone help in code or theory. I have a B.S. in electrical engineering and my code speed is about 15 wpm.

Thank you very much. I think Ham Help is a very good idea.

Bob Hajdak
1834 Paisley St. Apt. 12
Youngstown OH 44511

Another CW Keyboard Keyer

-- CMOSed for ultra low power consumption

R. L. Way WA9VGS
12116 W. Belmar Drive
Hales Corners WI 53130

The TTL mechanized keyboard keyer previously described by W9UBA and WA9VGS* has been carried a giant step forward by K6BS (formerly W9HI). Ern liked the simplicity of the Keycoder I design, but wanted a completely self-contained unit with very low battery drain for mobile and portable CW use. So he remechanized Keycoder I with inexpensive and readily available CMOS logic elements and obtained the following results: 7-8 microamps of power dissipation during keyer operation, and a few tenths of a microamp during the quiescent state (there's no "on-off" switch in his unit). Ern reports that he's still using the same 9 volt transistor battery that he installed in October, and that it's still reading 9 volts (mid-March). Useful battery life should about equal the shelf life of the battery.

The elimination of an ac power supply in this CMOS keyer, of course, means less weight, less space required, less building time, and, most important, fewer dollars to build. Also, with no ac leads coming into the unit there is even greater immunity to rf interference (K6BS operates a kilowatt and has had no rf problems).

As shown in the schematic diagram, the circuit operation is practically identical with that of Keycoder I, so only the differences will be commented upon here. Observe that pins 4, 5, and 6 of U7 (top left of diagram), and pins 11, 12, and 13 of U7 (to the right of the SCR Q1), are shown as inverters. Actually, these are 2 NAND gate sections of a quad 2-input NAND gate element (CD4011); they function as inverters in this circuit (the inputs of each section are tied together), so are shown as inverters.

*73, July, 1976.

The 22k and 10k resistors and the 0.22 uF capacitor in series with each other across the 9 volt transistor battery provide a bit of transient filtering for the 9 volts, and the resistors also serve to limit current through the SCR. The diode connected to the junction of the resistors gives a small amount of feedback around the SCR, and may not be needed, depending upon the particular SCR and R and C values you use.

The dot generator is a relaxation oscillator consisting of two sections of U7 (top left of schematic) with RC feedback. It works like this: In the quiescent condition, the logic states are as shown on the schematic, and the 0.27 uF capacitor is fully charged. When pin 1 goes high, pin 3 goes low, and pin 4 (the dot generator output) goes high, starting the first dot. With pin 3 low, the capacitor starts to discharge toward that point, but does so relatively slowly due to the large resistances in the discharge path. When the capacitor has discharged sufficiently, the voltage at pin 2 falls below the input threshold of the gate, causing

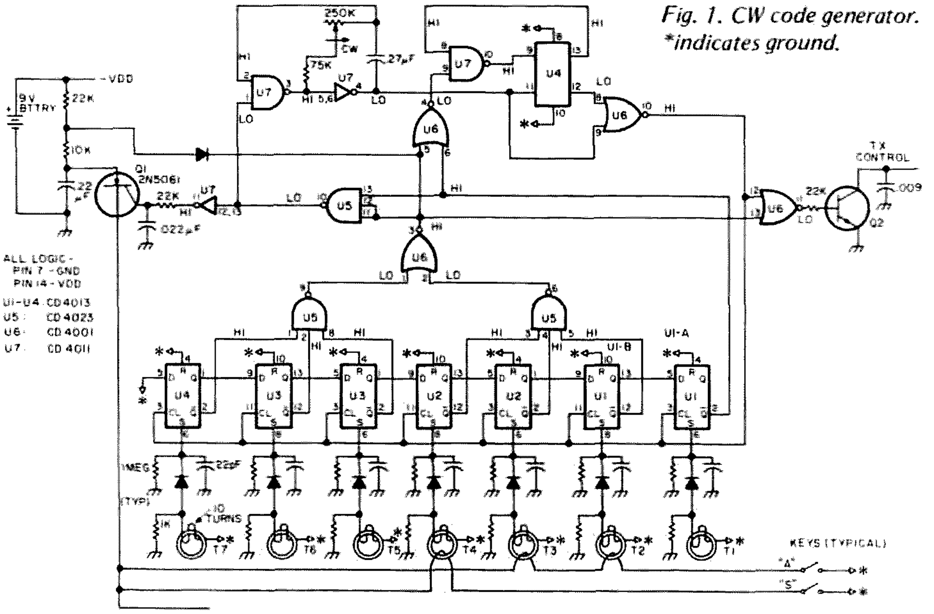

Fig. 1. CW code generator. *indicates ground.

pin 3 to go high, and pin 4 to go low, completing the first dot. With pin 3 high, the capacitor starts to charge again, but again takes a finite time to do so because of the large R. When the capacitor charge reaches the input threshold of the gate, pin 3 goes low again, and the cycle repeats, as long as pin 1 is high.

In order to further conserve microamps, and because all his rigs have sidetones, K6BS did not include a monitor in his CMOS keyer, but the above dot generator circuit could easily be duplicated, with appropriate changes in R and C values, to provide a code monitor; only one additional 29¢ element would be required.

The core matrix circuitry is a little different than that in the TTL Keycoder. First of all, the logic is reversed since CMOS flip flops are set with a logic "1", rather than with a "0". Hence, the core secondaries are connected to ground, and phased such that a positive spike is generated when a key is closed and the SCR fires. As with the original Keycoder, the phasing of the cores can be determined experimentally during construction. The 1k resistors from the core secondaries to ground are for loading, and 1k is simply a nominal value. Because of the extremely high input resistance of CMOS elements, all pins must be terminated to prevent self-oscillation and resultant thermal runaway. Therefore pins 6 and 8 of the CD4013 flip flops (U1-U4) are connected to ground through 1 M resistors. The 22 pF capacitors stretch the extremely rapid input spikes from the cores into 10 usec wide pulses to set the shift register flip flops.

NPN transistor Q2 can be selected with sufficient drive to work with either of the output schemes discussed in the previous article. ■

MOVING?

Let us know 8 weeks in advance so that you won't miss a single issue of *73 Magazine*.

Attach old label where indicated and print new address in space provided. Also include your mailing label whenever you write concerning your subscription. It helps us serve you promptly.

Write to: **73 magazine**
Peterborough NH 03458

- ☐ Address change only
- ☐ Extend subscription
- ☐ Enter new subscription
- ☐ 1 year $10.00
- ☐ Payment enclosed (1 extra BONUS issue)
- ☐ Bill me later

name ______________________ call __________

address ______________________

city __________ state __________ zip __________

AFFIX LABEL

If you have no label handy, print OLD address here.

name ______________________ call __________

address ______________________

city __________ state __________ zip __________

by Wayne Green W2NSD/1

I/O EDITORIAL

HALF A COMPUTER

Most of the ads for computers are written for knowledgeable computer fanatics, not beginners. Thus there is a certain lack of candidness as far as the software involved is concerned. Newcomers may be vaguely aware that software is needed for computers, but not really understand just how important it is . . . particularly for the neophyte . . . to have some sort of operating system available.

Like several thousand others, I read the early MITS ads and envisioned myself sitting down to a small computer system (golly, the board is only $425 in kit form!) to play games, keep track of DX stations worked, find out when Oscar would come into range, and things like that. Naive Wayne.

For several months my Altair 8800 microcomputer was a fantastic $2000 coffee table conversation piece. I could hold visitors spellbound with tales of the marvels of this great device and the things it would be able to do. Note that "would be able." About eight months into my ownership of the 8800 I received a cassette with BASIC language on it . . . and a brief instruction manual. About three months later I cheered one night when, after a great many tries, the system suddenly came to life and BASIC loaded and was usable. Now I could start to learn programming.

This is not to in any way put the Altair down, for the ignorance was mine about the importance of software for almost any applications of the system. And while MITS was optimistic about when it would have a BASIC interpreter ready for delivery, their optimism has been a model of rectitude as compared with some other microcomputer manufacturers. In case there is any question in your mind, I think the rule of thumb is that hardware takes about twice as long to get into production as expected by the manufacturer and software about four times . . . if they are lucky.

One of the more frustrating things about reading ads for microcomputer systems is trying to figure what configuration you will need and what programming is really honestly available right now for it. For instance, when I visited Sphere back in August, 1975, they were expecting to ship hardware within a few weeks and were certain they would have BASIC available for it in the same time slot. I think the hardware finally got out in about four months (complete systems, I mean) and to my knowledge they have not yet shipped BASIC in any good usable form.

Sphere did have a version of BASIC which they started to send out, but my understanding was that it was one which had been written for a minicomputer system and had then been adapted via an interpreter to the Sphere. The result was a verrry slooow system. Back to the drawing board.

The last I checked there was no BASIC available as yet for the Wavemate (Jupiter) system.

Southwest Tech has come up with 4K BASIC and an 8K BASIC. The 4K is free with the M6800 system and the 8K costs about $10 extra . . . not a bad deal at all. At first SWT wasn't going to get involved with programs, but now they are sending the 4K BASIC to all owners.

Imsai does have BASIC available . . . either on paper tape at $4 for the 4K version or $8 for the 8K version. Both are available on PROM, and this has an advantage of being in such a configuration that it can be used right from the PROM without having to take it off into a RAM memory before it can be used as the new Altair PROM BASIC requires. The cost is not inconsiderable, however . . . about $500 for the 4K BASIC with PROM and board and double that for the 8K system.

Having the program on a PROM is a big time-saver, because then you don't have to sit and wait for BASIC to be loaded into the system every time you start it up. With RAM memory you either leave the system turned on permanently or else you go through the long loading procedure every time. PROM looks very good to you along about the twentieth time you have to load up.

Speaking of prices, the Altair BASIC on cassette, if you buy your memory from MITS, costs about $75. Bargain. Oh, you pay a little more for their memory boards, but then you can't do much without that BASIC, so the extra expense seems reasonable.

If you are into computers and programming, you may not care whether BASIC (or any other high level language) is available. Not that any others are really available as yet, practically speaking. I've seen ads for FORTRAN for the Altair, but since the ad was from a software house I'll bet they want an arm and a leg. I note that Dick Whipple (you've been reading his articles) programs in machine language and likes it. Of course, most of his programs have been process and haven't really called for the time savings of a higher level language. I suspect if he wanted his system to sit there and compute the square root of a long list of numbers that he might want to insert BASIC or FORTRAN.

If any readers have more information on this whole subject, their articles will be appreciated. There are thousands out there who know many times as much as I do about it, and I'm ready at any time to step off my podium and make space for them.

The thrust of this message is to read the fine print carefully when you are shopping for a computer system. I think you are going to want BASIC for your system, so make sure you know where you can get it . . . and how much it is going to cost.

If any readers think that they are going to order hardware and get a computer system up and working without learning a lot, they have another think coming. These are in no way black boxes as yet. Even brand new assembled boards from the factory may sit there and not work, and you will have to be able to troubleshoot them. You'll have to find out which chips or parts of chips on your memory boards are not remembering. You'll have to find out why in the devil the program you have so painstakingly put together gets dumped into nowhere when you thought you were merely putting a copy of it on a cassette and saving the original in memory. Etc10.

Have fun.

BEEFS

A letter from WA3LWR in Scranton is typical of perhaps a half dozen received in recent weeks. It will come as no news flash that I am oversensitive to criticism and feel that I have to justify myself. This is no exception. Bob complains that *73* was once a ham radio magazine, but now is filled with computers and too few general interest articles. Possibly.

If you happen to feel likewise, I would appreciate not only hearing from you, but getting a detailed review of your reaction to the articles chosen for each issue. Take the August issue, which apparently sparked Bob's complaint . . . it starts out with an article on ICs (p. 24) – I assume there are still amateurs who are so locked into tubes that they are trying not to learn about ICs, but since ICs are one of the most fundamental building blocks for most current ham circuits and virtually all in the future, would *73* be a responsible publication if it turned down articles such as this? The DDRR antenna (p. 28) – isn't that hammy enough for you? The keyer (p. 38) might not have interested you before July 23rd if you are a Tech, but now that you have Novice frequencies you'll be wanting to build a good keyer, and this is a good one. The breadboard article (p. 52) would not interest you if you don't build, but since over 80% of the hams today build . . .? The audio generator (p. 56) would interest those into FM, RTTY, SSTV and control circuits, and hopefully that includes a lot of hams. Golly, you *must* be interested in *something* other than rag chewing! If you don't build, the Logic Grabber would not interest you (p. 60). And the DX article (p. 68) would be of most interest to DXers. I love DXing, don't you? The counter calibrator (p. 70) should interest any builder or counter user . . . how can you get along without a counter? I use mine virtually every day of the week for something. The 450 rig doesn't grab you? A lot of chaps are active on the band . . . and ATV is flourishing with the pioneers. Now, even if you are not a pioneer type, you recognize your dependence on them to keep amateur radio going. Are you going to try to force magazines not to publish articles to spur pioneering? That seems counterproductive. If you are too busy to do the work, at least don't try to prevent others . . . okay? Now we're into the so-called I/O or computer section, starting with a fantastic story by WA8VNP, a youngster who is the epitome of what amateur radio is all about. Oldsters with firmed up minds would do well to read Don's article. What was *your* reaction to it? (p. 82) The chip (p. 90) and languages (p. 98) and arithmetic (p. 108) are an effort to provide fundamentals in this new field . . . and they are difficult to get *anywhere* else. Baudot (p. 102) is for RTTYers mostly. The Logic Probe (p. 106) is needed in almost every ham shack these days. Satellite orbits (p. 113) . . . hammy? Only if you are into Oscar . . . and you *should* be. A couple more RTTY articles (pp. 122 and 150) . . . one on logic (p. 116) . . . a signal tracer (p. 148) . . . true, there isn't much for the rag chewer and we did antennas so much in June that many readers are still in wire shock.

What do *you* think about the content of *73*? I know that only a small percentage of readers are yet into microprocessors, just as very few readers were into FM back in 1969 when I started making information available on repeaters. I don't see how uP can have any less impact on hamming than FM . . . and FM is the single most active mode today in amateur radio. I'd appreciate your opinions . . . but please be specific and cover every article in an issue, not just a general impression . . . okay?

I/O REPORT

by John Craig

The New Magazine

The machinery has been set in motion for starting a new computer-oriented magazine later on this year. I should point out that it isn't going to be just another magazine in the field, either . . . it's going to be the *best!* Our main thrust will be in the area of *applications.* We're going to have articles on both hardware and software, and they'll be written with examples and applications we can all relate to.

I'm sure that everyone who has become involved in personal computer systems has heard (time and again) the question, "What are you going to do with a home computer?" My standard reply to that question is, "It's my toy, and I have a lot of fun playing with it." Deep down inside I know full well that it's destined to be more than a toy.

Someday, in the not too distant future, there are going to be a lot of people taking a second look at the "monsters" they've created and realize these computer systems could be *making some money,* too. (Extra cash is something most of us don't find objectionable, right?) If you think you've heard some good application ideas so far, just wait until the small business ideas start flying around! And just wait until you see how our new magazine covers those (and many more) applications!

Speaking of Money-making Ideas . . .

The other day a friend of mine, who is a professional programmer, stopped by for a chat and came up with an interesting proposal. He suggested that the two of us pool our resources and go into a part-time business doing accounts receivable, inventory, and payroll for doctors' offices. (He felt it would be best to concentrate on just one type of business in the beginning.) His proposal was this: He would develop the software to make such a system possible and I would provide the hardware for running it. The system would be cassette-oriented, in that the doctors' offices would have a data-entry terminal for entering all transactions, inventory flow, etc. The purpose of the terminal would be to record all of these transactions onto the cassette . . . which we would pick up each evening for processing at home.

At the moment there are two or three obstacles to be overcome before such an idea could become a reality. A floppy disc would be most desirable, to say the least. (Or would you believe a 52 megabyte IBM cartridge-type disc for $375.00??) The item which is really holding things back is a low cost key-to-tape data-entry terminal. I sure wish someone would get busy and develop it. It wouldn't have to be very sophisticated; the main thing would be to provide a display (perhaps just three or four lines by 32 characters) so the operator could check the entry before writing it out to the cassette. A keyboard, display, cassette recorder, and the interface electronics would be the basic elements. (And how about for under $150??) Just think about it for a moment . . . this little terminal could be used in just about *any* business! Sound interesting? Good. Why doesn't somebody get busy on it . . . line up a manufacturer to put out a kit . . . and we'll publish it all in *73?*

The Sherick DG System.

Responsible Applications

We all get junk mail. As a matter of fact, some of the junk mail we get these days is generated by computers. I don't have anything against this stuff . . . it's simply too easy to throw it away if I don't want it. I recently heard about a computer application involving *junk phone calls,* and that *does* bother me. Something like that is getting very close to what I would call "invasion of privacy," and I have the feeling a lot of other people will feel the same way.

The idea centered on the development of a system which would generate "sales pitch" phone calls for a real estate company. Using an optical reader, the computer would scan through pages of the phone book and call prospects within the immediate area of the real estate. It was estimated that if only a small percentage of the calls resulted in sales the system would pay for itself.

A lot of people either have a fear or a distrust of computers, and I would hope that the evolution of the home system might help to eliminate this somewhat. Receiving junk phone calls from a computer will probably turn some of that fear and distrust to anger. This isn't going to help us in promoting personal computer systems, and, who knows, it might even lead to legislation prohibiting such activities. And, as someone else pointed out, "The biggest problem here is that I'd have to go to the trouble to program my computer to answer your computer!"

The June SCCS Meeting

Erich A. Pfeiffer (Ph.D. and WA6EGY) gave a very interesting talk on the history of computers and microprocessors. (Be sure to catch his article in the August *73* on building the MINI-MOS Keyer.)

As usual, the meeting was attended by several hundred (two or three, at least) computer enthusiasts. The exhibitions, displays, and selling areas took up three full rooms. The rest of the country has to wait around for the next computer convention . . . we have one here in Southern California every month!

The Talking Computer

One of the second prize winners (there were two) at the MITS convention back in March was Wirt Atmar and his talking computer. He has since decided to market the hardware/software package and has made some interesting discoveries as a result of his efforts.

It seems that his machine has somewhat of a "computer accent" and is most easily understood by young children and people who have traveled and been exposed to different dialects and accents. The talking also seems to be easier to understand when it is being used during the playing of games. But perhaps the most interesting point was the fact that a person had to *want* to understand the machine. Those who approach it with a negative attitude in the beginning seem to be the ones having the greatest difficulty understanding it.

Wirt is going to be selling the package for around $400. They're going to be sold only through computer stores around the country. That way a person will be able to go in and hear it before he buys it. He could build a unit that would sell for around a thousand dollars, and would be more easily understood than the present one, but he feels that is out of the range of the average hobbyist.

Writing for 73

Wayne and I mention writing articles so often that it must seem like we're really in a rut. Not so. We just know a good thing when we see it. And I mean a good thing from your angle. To heck with the fame and recognition . . . we pay out large quantities of U.S. currency for good articles.

If you don't care about the money or fame, then let me appeal to your "responsibility" to share some of the things you've been doing with your system that others may not have the know-how to accomplish. There are a lot of people out there doing a lot of exciting things. Unfortunately, they aren't taking a little time to tell the rest of us about them. If you are one

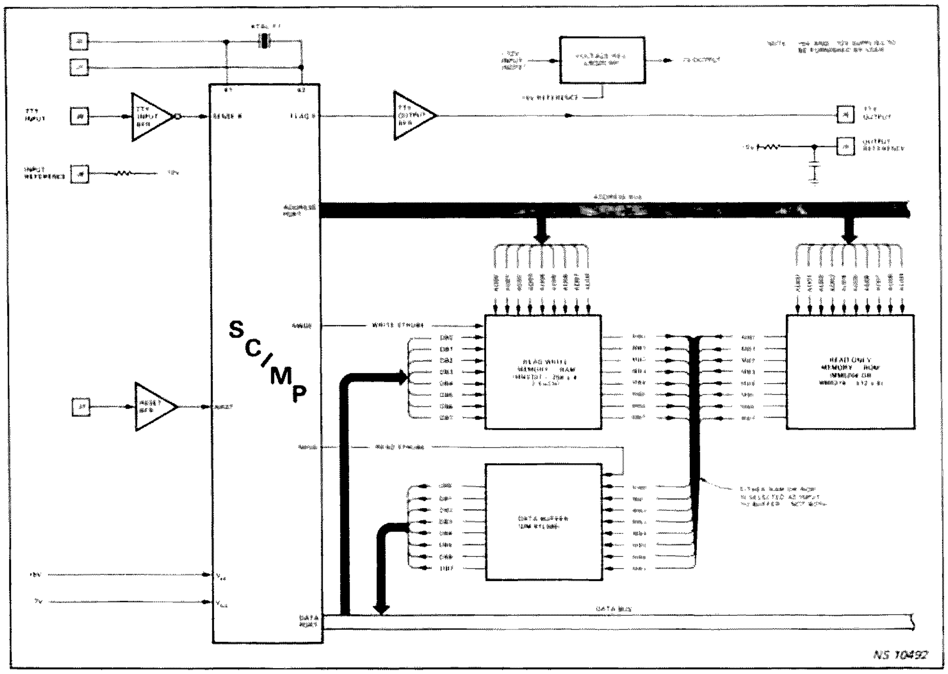

Fig. 1. SC/MP kit block diagram.

of those people . . . give it some thought, OK?

What would happen if . . .?

Here's something for you to think about. What do you suppose would happen to this home computer "movement" if some large company with a lot of advertising bucks came out with a *system* and began advertising it on nationwide television? I'm thinking in terms of a "turn-key" home system. The average layman could purchase it at his local computer store (or local Radio Shack outlet?), cart it home, plug it in, load a program into it from cassette, and have it start doing things. (Actually, that last point may be the big stumbling block for this whole scheme. Are there that many practical *things* the home computer can now do that would make it appeal to the average layman?)

Let's assume that a salable software package was developed by some company, such as Radio Shack. I'm sure you've all seen some of Radio Shack's impressive ads on TV for their CB and stereo units. What if they used that same tasteful (and sophisticated) approach for convincing Mr. and Mrs. America that the "Realistic Home Computer System" was something they couldn't live without?

If the price were right and people started buying their package, the spin-offs would be incredible. Most importantly, the entire country would be aware of the coming of the home computer . . . and a lot of people would do some shopping around. And even if the Radio Shack system were built around a little-used chip like the Fairchild F-8, there would soon be a lot of companies jumping on the bandwagon developing and marketing memory and peripherals for the system. Also, as more people become involved in this thing, it should mean a lot more software being developed for everyone (at least, I sure hope it turns out that way).

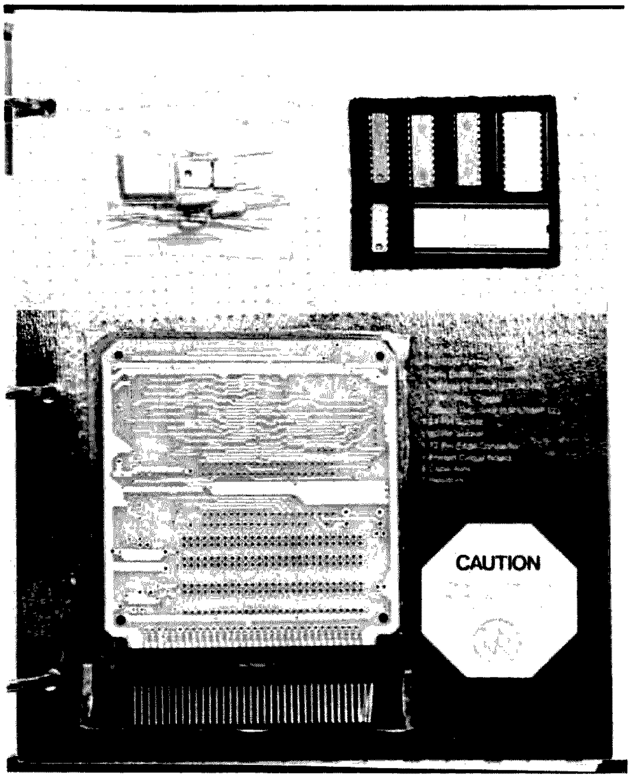

Photo 1. The SC/MP kit upon arrival.

The Sherick DG System

Mike Sherick, of Vandenberg AFB, California, was only recently bitten by the bug. After attending several meetings of the local computer club (Central California Computer Users' Group . . . at the Cabrillo Computer Center . . . home of the *Micro-8 Newsletter*), he decided on a Digital Group System. He chose the Digital Group System for a couple of good reasons. The first was the fact he had seen how easily a friend's (Sam Daniels') unit was brought up and became operational with very little difficulty. The second reason was that Sam is an extrasharp programmer type, and the two of them decided to team up and work to their mutual benefit.

Mike is a professional photographer with a long-standing interest (and involvement) in electronic experimentation. The "experimenting" has certainly carried over into some of the things he is doing with his home computer system, too. For example, that front panel is far from being a standard item from the Digital Group (they provide the plans for it, but that's all). Mike became convinced of the value of a good front panel for hardware debugging and development (and software debugging) and set forth to build a real beaut.

Notice the bottom center switch on the front panel. It's labeled "PROM," "RAM," and *"PRAM."* Mike built an interesting modification into his system, which allows him to have page zero as the DG operating system PROM, or as RAM in the form of 2102s, *or both at the same time* (PRAM). The purpose of this mod is to allow loading of programs into page zero (which is normally occupied by the PROM). Through software manipulation, the two areas are operated in "simultaneously", i.e., the loading program is being accessed in PROM (page 0), and the new program is being loaded into the RAM in page 0. Whew! I wasn't sure I was going to be able to explain that! Future plans include the building of a variable step and examine rate feature, and mounting the entire unit into a modern brushed aluminum cabinet which is going to make us all drool. (We'll have to be sure to get a photo of that one, too.)

Mike got into this hobby because he has a curiosity and a desire to learn about computers. It's just a shame that his lack of experience has inhibited him so much!

We would like to see other systems from around the country in *73*. Take a picture of it (8 x 10, B/W) . . . with you, too . . . send along a little write-up . . . and we'll let the world know what you're doing. OK? And I'd especially like to see some good ham applications.

NEW PRODUCTS

National's 8-bit Microprocessor Kit — SC/MP

National Semiconductor has made the plunge! Their 8-bit SC/MP (originally called "SCAMP") microprocessor has been out for some time now, but apparently some new marketing strategy has developed and they're now offering it in a package for $99.00. That price, and what it buys, is something for the hobby community to sit up and take notice of, too.

When the SC/MP kit arrived, we opened the box and the only thing in there was a notebook! The first reaction was that somebody goofed and

forgot to include the computer. But, it turns out they have a rather neat packaging scheme and the components are mounted on cardboard and located in the notebook (under, of all places, a section entitled "Components"). See Photo 1. The notebook contains a very thorough collection of manuals covering the kit and its construction, technical description, and programming.

The kit itself consists of a printed circuit board, 72-pin edge connector, discrete components (resistors, capacitors, crystal, and voltage regulator), and the SC/MP microprocessor and support chips (see Fig. 1 for a block diagram of the SC/MP kit). The support chips include a pre-programmed 512 byte Read-Only Memory which contains KITBUG (a monitor/editor for program development), and 256 bytes of RAM. A TTY interface is also included on the board (a $99 computer ... and a $1500 TTY!).

The SC/MP microprocessor has a complement of 46 instructions (both single and double byte). The chip has an internal clock generator which requires only an external capacitor or crystal. A serial input and serial output port are provided, along with two sense inputs (one which doubles as the interrupt input) and three control outputs. These control outputs can be used for external control of such things as relays, solenoids, external lights, and alarms. The chip requires +5 volts and -7 volts (which is derived, in the kit, from -12 volts being applied to an LM320 voltage regulator).

Fig. 2 illustrates how the separate serial and input lines can be used to implement parallel-to-serial (and vice versa) transfers under SC/MP control. This is just one of several application diagrams included in the documentation. They also provide circuits for building a front panel and a hexadecimal keyboard interface (which would be considerably less expensive than a TTY).

One of the interesting possibilities offered by the SC/MP is its use as a central I/O controller in a microcomputer system. Imagine having small routines in PROM which would handle data transfers to and from a cassette, to and from your TV Typewriter, and output to a low cost printer. These routines could be developed using RAM memory, and after dubugging could then be transferred into PROMs (with appropriate address modifications made . . . which hopefully, would not lead to further debugging being needed). The SC/MP PROM (a 5204) can be programmed by your local National distributor, Bill Godbout Electronics, or Morrow's Micro Stuff for a nominal fee. (See the Godbout and Morrow's ads in this issue of *73*.)

Programming the SC/MP is accomplished using the KITBUG monitor/editor. KITBUG has a grand total of three commands: T, for "typing" out the contents of memory (i.e., a memory dump); M, for "modifying" individual memory locations; and G, for "go" (begin program execution).

We happened to have a power supply (which provided the necessary +5 and -12 volts) mounted in a small cabinet. There was just enough room for mounting the SC/MP kit, and Photo 2 shows the neat package we came up with. The "system" consists of a master reset switch (top center), power on/off switch ("operate"), four connections to the ASR/33, and the +5, -12, and ground connections. Note that space is provided on the PC board for mounting additional components for a particular application.

The SC/MP kit does not lend itself to much in the way of memory or I/O expansion. However, National does offer three application modules for those with a desire to build a larger system around the SC/MP. These include a CPU PC board, RAM memory board, and a ROM/PROM board.

National offers applications and programming training for the SC/MP (and their other microprocessor systems, including PACE) at their training centers in Santa Clara CA, Dallas TX, and Miami FL. They also sponsor COMPUTE (Club of Microprocessor Programmers, Users, and Technical Experts) which is "a user group dedicated to the worldwide distribution of ideas and techniques relating to the use of microprocessors." Members communicate through the *Bit Bucket*, a newsletter published by National Semiconductor. One of the neat things about COMPUTE is the user-submitted software library which has contributions published regularly in the *Bit Bucket*. It's a pretty good bet that it won't be too long before some user contributes a SC/MP version of Tiny BASIC!

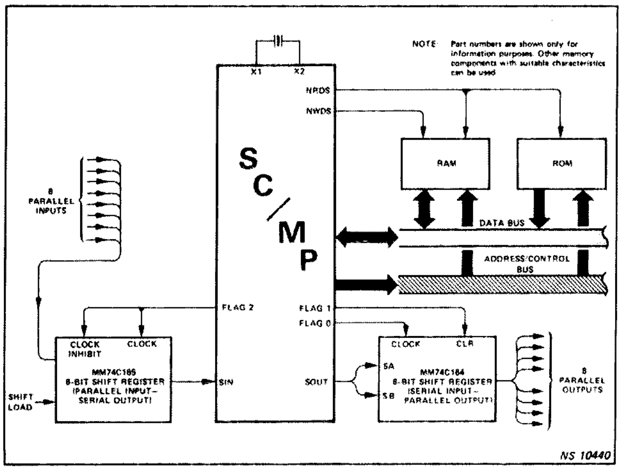

Fig. 2. Using SC/MP with a simple serial interface.

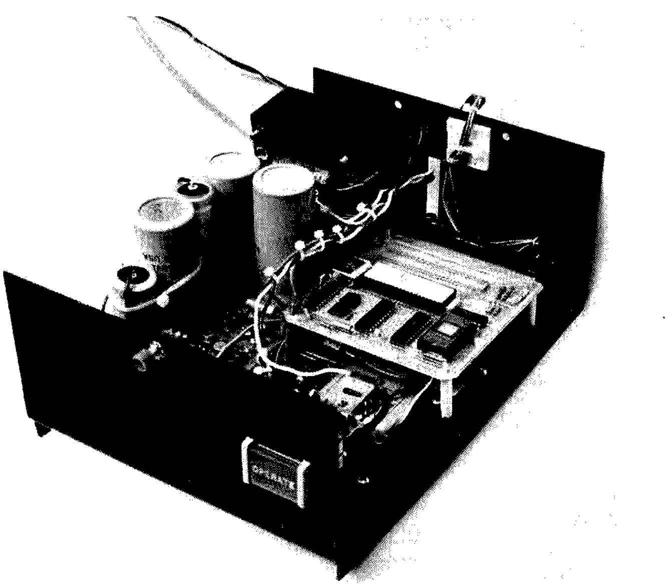
Photo 2. The completed SC/MP kit "system."

The SC/MP kit single unit price is $99.00. To order, or obtain further information, contact: National Semiconductor Corporation, Mail Stop 520, 2900 Semiconductor Drive, Santa Clara CA 95051.

The Tarbell Cassette Interface

There have been a lot of companies in recent months that have jumped on the bandwagon in providing plug-compatible accessories and options for the Altair 8800. Tarbell Electronics should be put up toward the top of the list of those providing *quality* units.

The unit can be purchased either in kit form or assembled. Audio and ribbon cable is provided for the Altair and cassette recorder interfacing, and a sync tape is included for initial checkout. The manual supplied with the unit contains a wealth of information. Aside from the assembly and checkout instructions, circuit theory of operation, operating tips, troubleshooting, and application ideas, there is an abundance of software. Routines are included for input and output transfers, cassette bootstrap, and sync code generation; most importantly, modifications to MITS 8K and 12K BASIC are also included, so either one can be loaded or saved using the Tarbell interface. Another significant offering in the software area is a mini-operating system (Processor Technology Software Package #1), which has file handling capabilities (SEARCH for a particular file, MOVE it from one area of memory to another, COPY from one cassette to another, SKIP a file, and more). The cassette also includes an assembler and text editor. It is available free with a $5 handling charge for listings and instructions (if you desire them also).

The interface was designed to achieve speeds up to 540 bytes per second (2200 bits per inch), but the normal operating speed is 187 bytes per second. This corresponds to the ANSI standard of 800 bits per inch. By modifying the oscillator frequency and performing a parallel-to-serial conversion in software, the interface can also be used for program exchange using the Kansas City standard. The manual makes the point that, "Since the standard is fairly slow, it suggests that many people will want to have two methods available: one which provides for program exchange with other hobbyists around the country, and another which is much faster, so that program loading and development can be speeded up." Since a great deal of time is going to be spent saving and loading data, programs, and other text, the speed will definitely become an important consideration. You need to decide if you want to have enough time to stand up and stretch while loading BASIC at 187 bytes/second (40 seconds) or have time to jog around the block while loading at 30 bytes/second (*4 minutes*).

The encoding technique used in the Tarbell interface is quite simple and has been in use throughout the industry for quite some time. You can visualize this technique if you imagine a shift register filled with data. The register is clocked with a square wave and the output data is exclusive-ORed with this square wave. This results in a

Continued on page 116

Jeff Roloff
Central Data Company
P.O. Box 2484, Station A
Champaign IL 61820

RTTY/uP Flexibility

-- Baudot/ASCII serial/parallel I/O

The next two construction articles in this series allow your RTTY/Computer Display System to be hooked to serial data lines, either ASCII or Baudot, rather than having to accept parallel ASCII. This feature can prove very useful if the display unit is very far away from the data sending unit (keyboard or computer).

Both projects fit on a small (less than 4" x 4") board and connect to the main board with a dual ended DIP plug. They allow simple selection of a crystal controlled baud rate by setting eight inputs to the board high or low according to a formula. Each uses a UART, which makes reliability high and keeps the number of components low.

With the main board and either one of these optional input boards, you have a very powerful display terminal easily switchable between different codes and formats.

This month the ASCII input will be discussed, while next month the Baudot article will be presented.

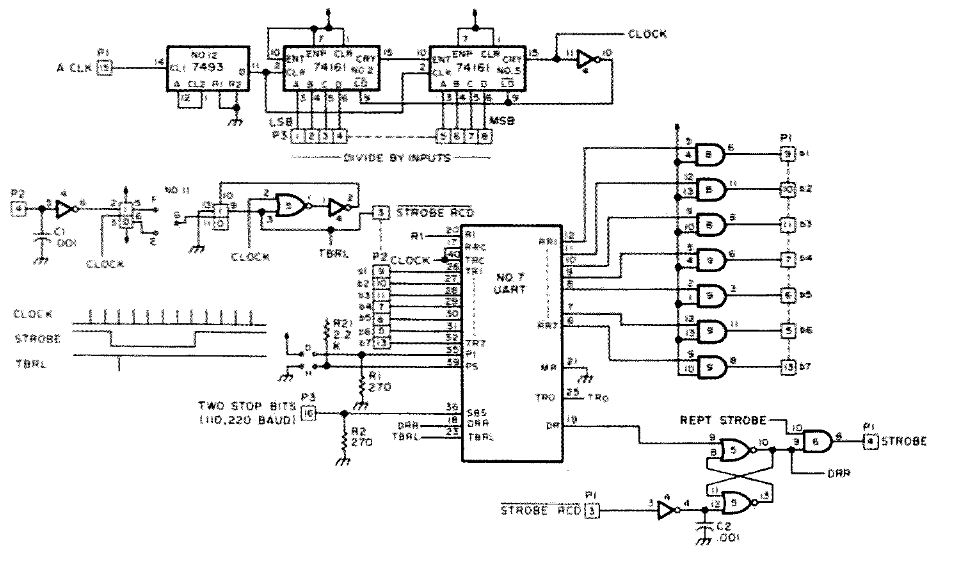

Fig. 1. Jumpers: D — parity inhibit; H — odd parity; E-G — positive strobe, F-G — negative strobe.

Figs. 1 and 2 are the schematic diagrams for the serial ASCII input option. This option is used to convert serial ASCII to parallel, or take parallel data from a keyboard and serialize it. The major device used is the UART, which changes the data's format while converting from serial to parallel (or vice versa).

The UART requires a clock at 16 times the baud rate, which is made by two divide by N counters. The counters each have four inputs, which control the number of divisions the counter has (from 1 to 16). The formula for setting these inputs is:

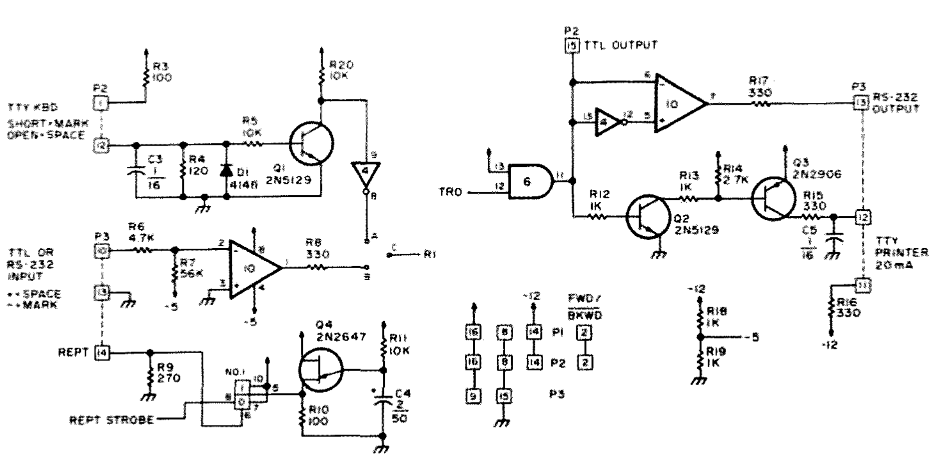

Fig. 2. Jumpers: A-C — TTY keyboard operation (input); B-C — RS-232 input.

$$256 - \frac{380,160}{16 \times \text{baud rate}}$$

Note that the number must be converted to binary to set the inputs. Therefore, for 110 baud the setting would be:

$$256 - \frac{380,160}{1760} = 40 =$$

0010 1000
msb lsb

The inputs to the two counters appear at eight pins of the P3 plug, and can be hardwired to the determined setting or run to a switch where several speeds can be selected. Jumper settings for several common baud rates can be found in Table 1.

The output of these dividers (circuits 2 and 3) is pin 15 of circuit 3, and is sent to the UART clocks, pins 17 and 40.

The serial input data can take any of three forms: TTL, EIA, or 20 mil loop. If it is TTL or RS-232 (EIA), it is fed into an operational amplifier which inverts it. If a 20 mil loop is used, the outside world simply opens and closes the circuit between pins 1 and 12 of plug P2.

If these contacts are shorted, current flows through the 100 and 120 Ohm resistors, causing a voltage drop across the 120 Ohm. This voltage drop is fed through a resistor to turn transistor Q1 on, grounding its collector. This brings pin 8 of circuit 4 high — which is a mark condition to the UART. If the two terminals are open, no voltage drop will appear across the 120 Ohm resistor, and the transistor will stay turned off. This will bring 8 of 4 low — a space condition to the UART. Either the output of the op amp or the inverter can be jumpered to the UART serial input, with B-C being the op amp and A-C being the loop input.

This data is fed into the UART, and is converted to parallel there. The parallel output is buffered by circuits 8 and 9, and the data ready line (pin 19) goes high when the output data is stable. This line sets a flip flop (pin 9 of 5) which brings 10 of 5 low. This is sent through an AND gate to the display unit as the strobe line. It also goes directly back to the UART to acknowledge the data ready line.

When the display unit receives the strobe, it enters the data into memory and sends back a strobe received pulse. This resets the flip flop, causing strobe to go away. The UART is now ready to receive another byte of data.

If data from a keyboard is to be serialized, the parallel data is presented at the UART, pins 26-32. If you don't want parity sent with the data, jumper D. Likewise, if you do want parity sent, don't jumper points D. Then jumper or leave H if you want odd or even parity, respectively. The strobe pulse from the keyboard is debounced by the .001 disc capacitor and the first half of circuit 11. The output of this flip flop is sent to the clock of the next one. When this goes high, the second flip flop's output goes low. This is ORed with the clock, so that the next time the clock goes low, the flip flop will be preset. The series of events for the strobe input is shown in Fig. 3.

Pin 9 of 11 is the strobe received pulse sent back to the keyboard, and also loads the data into the UART. After the load pulse goes away, the data is sent out pin 25 serially.

This output is buffered at pin 12 of 6 and is sent to the three different outputs. It is sent directly to the TTL output, but is buffered to +5 and -5 volt swings at the other half of the operational amplifier (circuit 10) for the EIA signal. The signal is also sent to a 20 mil loop switch, transistors Q2 and Q3. With the output high (mark), transistor Q2 is conducting, which grounds its collector. This turns on transistor Q3, which allows loop current to flow. If the output is low, Q2 is cut off leaving the base of Q3 high — also cut off. No loop current flows.

The -5 volt supply to the op amp is derived from a resistor divider from -12 V to ground, since -5 V is not sent from the main board to the ASCII input.

If "rept" is brought high, the clear line of circuit one is brought high, allowing its output to oscillate. This output is fed to the AND gate used for the strobe pulse — causing the strobe line to the display unit to oscillate. It should be noted here that even though the data ready line of the UART may have been reset before, the outputs are still available.

Assembly

Refer to the first four paragraphs of the main logic board's assembly procedure for basic information per-

Speed (Baud)	Divide By Decimal	Binary msb lsb
110	40	00101000
220	148	10010100
300	177	10110001

Table 1.

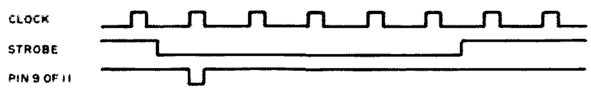

Fig. 3.

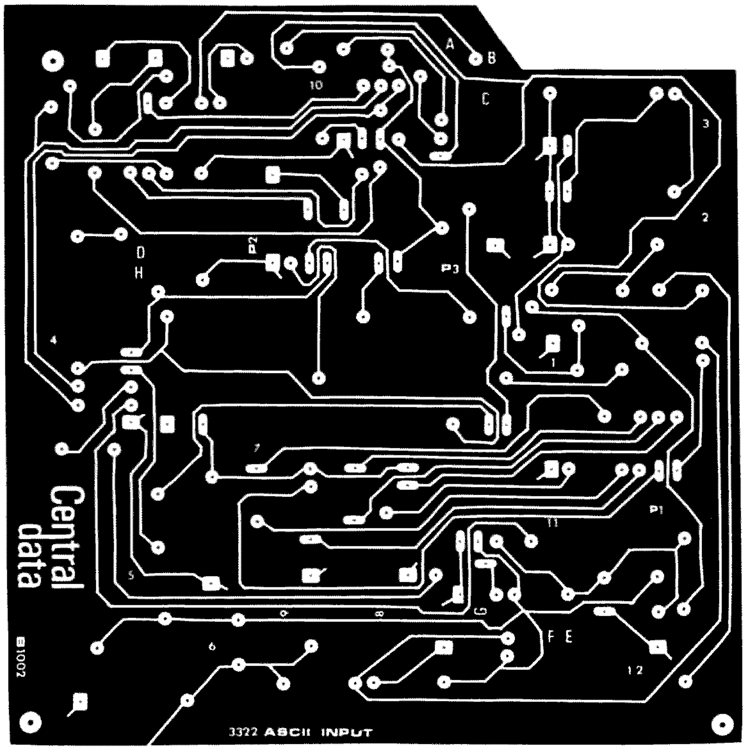

Fig. 4. PC board.

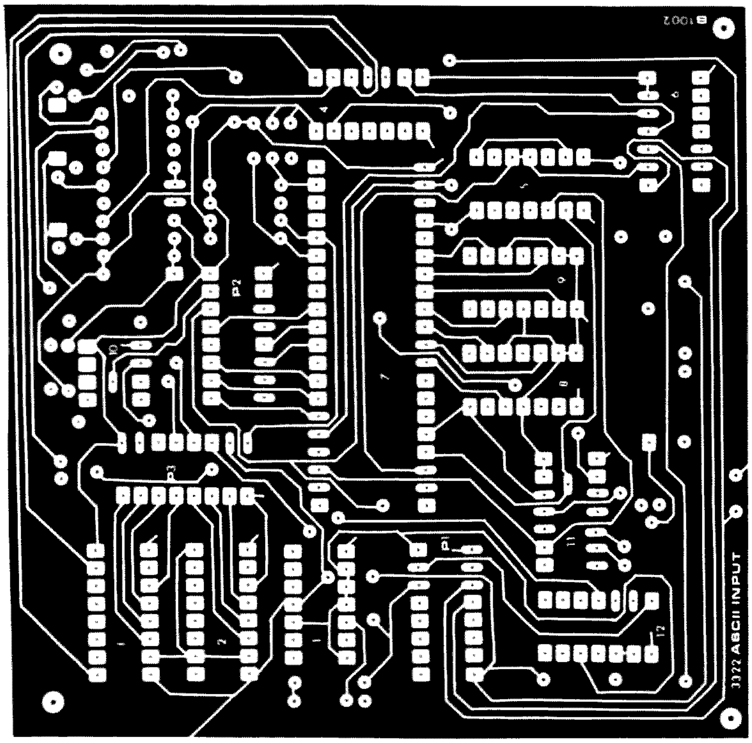

taining to the assembly of this unit. Fig. 6 is the placement drawing for all of the components on the ASCII input board. All parts have part numbers and component numbers (as used in the schematics) printed on the drawing.

1. Mount and solder all resistors and diodes to the board. The banded (cathode) ends of the diodes are marked with a square pad on the top of the board. Mount all of the components before soldering, as a way to check your work.

2. Mount and solder the 40 pin socket and the three 16 pin sockets at the positions marked UART, P1, P2, and P3, respectively.

3. Mount all of the TTL integrated circuits on the board and after checking their placement, solder them in. The placement of pin one is denoted by a small "flag" coming off of that pin's pad – along with a square pad on the top of the board.

4. Plug the 40 pin UART into the socket, being careful not to bend the leads.

5. Mount all capacitors and the transistors, being sure to polarize the electrolytics. The square pad on the top of the board denotes the positive end of the capacitor and the emitter of the transistor.

6. If parity is not to be sent, jumper D. If you want to send parity with the serialized keyboard data, jumper or leave H depending on whether you want odd or even parity, respectively.

7. Jumper E-G if your keyboard strobe pulse is negative going. If it is positive going, jumper F-G.

8. If you are using TTL or EIA RS-232 inputs, jumper B-C. If, however, you use the loop input, jumper A-C.

Operation

Connection of the serial ASCII input board to an external keyboard, modem, and main logic board is done by way of 16 pin DIP sockets and associated plugs. The cable with two DIP plugs is used to connect the two boards together, the input socket of the main board to P1 of the option board. There are two remaining cables, one shipped with both the main and the option boards.

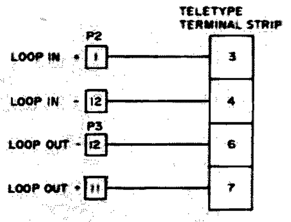

Fig. 5.

Parts List

Integrated Circuits
1-7402
1-7404
3-7408
1-7473
1-7474
1-7493
2-74161 or 74163
1-1458
1-AY5-1013 UART

Semiconductors
2-2N5129
1-2N2906
1-2N2646
1-1N4148

Resistors
1-120 Ohm
4-330 Ohm
3-1k
1-2.2k
1-2.7k
2-100 Ohm
3-270 Ohm
1-680 Ohm
4-10k
1-4.7k

Other
7-.1 disc capacitors
1-2 uF/15 V electrolytic capacitor
1-.001 disc capacitor
1-40 pin DIP socket
3-16 pin DIP sockets
1-DIP plug with cable
1-double ended KIP plug
1-circuit board

A kit of the above parts is available from:
Mini Micro Mart
1618 James Street
Syracuse NY 13203

One of these cables goes from P2 to a parallel ASCII keyboard and/or the circuits associated with the loop input and the TTL output. The pin designations for plug P2 are:

1 – loop input +
2 – fwd/bkwd (to P1)
3 – strobe received
4 – strobe
5 – b6 (keyboard data)
6 – b5
7 – b4
8 – Ground
9 – b1 (keyboard data)
10 – b2
11 – b3
12 – loop input –
13 – b7 (keyboard data)
14 – -12 V
15 – TTL output
16 – +5 V

The other cable goes from P3 to the circuits associated with the TTL or EIA input, the repeat key, the EIA output, the loop output, and the speed selection switch (if any). The pin designations for plug P3 are:

1 – b1 (divide by N)
2 – b2
3 – b3
4 – b4
5 – b5
6 – b6
7 – b7
8 – b8
9 – +5 V
10 – TTL or EIA input
11 – -loop output
12 – +loop output
13 – EIA output
14 – repeat
15 – Ground
16 – Two stop bits

Fig. 9 of the main article shows the colors of the flat cable as they relate to the pins of the DIP plug.

The specifications for the input signals are:

Loop input: Mark = terminals shorted; Space = terminals open.

Loop output: Mark = 20 mil current flowing; Space = 0 mil current flowing.

TTL or EIA input: Mark = .8- -15 V; Space = 2.4-15 V.

TTL output: Mark = 0-.8 V; Space = 2.4-5 V.

EIA output: Mark = -3- -15 V; Space = +3-+15 V.

To connect the ASCII input board to a full duplex, 20 mil loop teletype (KSR-33 or ASR-33), follow the schematic in Fig. 5. ■

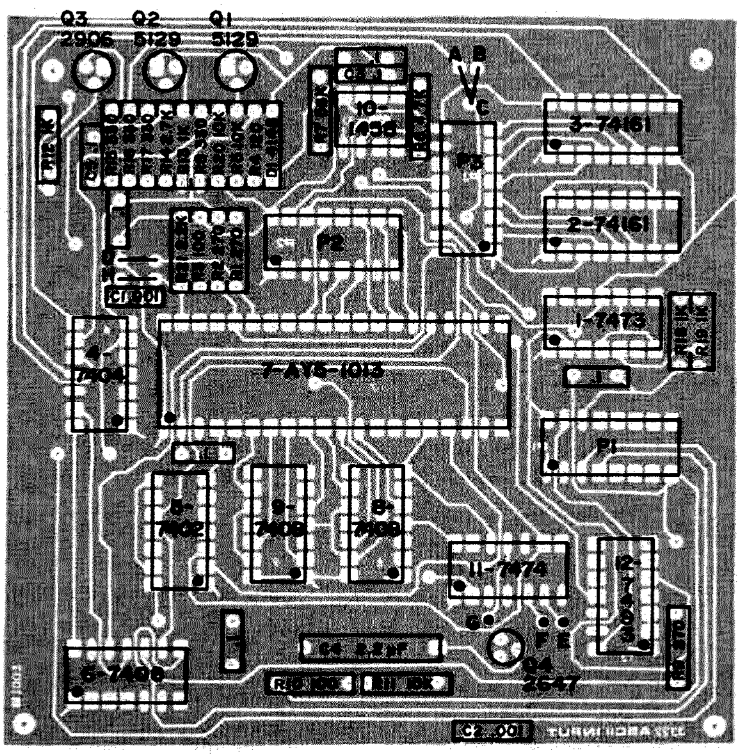

Fig. 6. Parts placement.

Pete Walton VE3FEZ
421 Lodor St.
Ancaster Ontario
L9G2Z9

Blowtorch Your ICs

--a bonus from computer surplus

Have you ever tried to remove 14 or 16 pin DIP ICs from surplus computer boards? Sometimes this can be a very exasperating job, and you may even pass up some good bargains because you don't want to go through all the trouble of removing them.

There are many ways to remove ICs. You can use a special tip that heats all the pins at once, you can clean the solder off the pins one at a time, you can use a special tip with a vacuum line attached, or you can even use a special tip with a blower attached. All these methods are slow, cumbersome, and expensive, and you will usually end up wishing you had three hands to accomplish very much.

The method that I use may shock you a bit at first, but believe it or not, it really works well.

I remove ICs from surplus computer boards with a blowtorch. That's right, a propane torch that can be obtained in just about any ham's workshop.

I turn the flame on the pins from the circuit side of the board and yank the IC out (fast) from the component side of the board using an IC puller or just a plain old pair of pliers. Even when using the torch running full blast, I have yet to damage an IC due to excessive heat. Excessive heat seems to be an old wive's tale on some of these modern ICs. Of course you can't reuse the boards. ■

Roger P. Killick G8KWR/DC0GK
58 Sevenfields
Highworth
Swindon
Wiltshire
England SN6-7NG

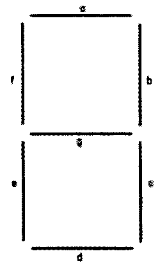

Fig. 1.

How to Interface a Clock Chip

-- Baudot, BCD or ASCII conversion

This circuit was developed as the result of a need to interface a clock chip to some other hardware. Unfortunately, the clock chip available had only 7-segment output, and was not equipped with BCD outputs. The first solution required a relatively large number of gates, and because of space restrictions, was inconvenient for the project in hand. To overcome this problem, the gating was replaced with a 32 x 8 PROM, addressing the PROM from the 7-segment output of the clock, with the BCD stored in the appropriate locations of the PROM. Fig. 1 illustrates the segment designations of a 7-segment display.

Since the PROM is 32 x 8 bits, it has only 5 address lines, and it is therefore impossible to use all the clock outputs. But if the 7-segment coding for the numerals 0-9 is considered (Table 1), it can be seen that it is still possible to obtain a unique code for each numeral, by using only segments a, b, e, f and g. If segment a is considered as the most significant bit, and segment g as the least significant bit of a 5 bit natural binary code (used to address the PROM), then the ten locations listed in Table 1 will be addressed for the numerals 0-9. These locations contain the BCD code.

Although the solution was satisfactory, there is a considerable amount of unused space in the PROM, and since it was desired to link the clock to a microprocessor-based RTTY system at a later date, it was decided to see if any of the remaining locations could be used to contain ASCII or Baudot coding for the numerals 0-9. The first to be dealt with is Baudot. If BCD and Baudot are compared (Table 2), it is very clear that element "B" of the BCD is identical to element "E" of the Baudot, except for the numeral 1. If it were not for this one difference, it would be possible to store the BCD (4 bits) and the Baudot (5 bits) in the 8-bit word of the PROM. This problem was overcome by the addition of a 7410 triple 3-input NAND to the output of the PROM, as shown in Fig. 2. Then, in any given word of the PROM, the BCD is stored in bits 0-3, and elements A, B, C and D of the Baudot are stored in bits 4-7. Thus all the BCD and elements a-D of the Baudot are directly available at the output of the PROM, and element E of the Baudot is obtainable from the extra gating, which works as follows. If the output of U1 is high, then the output of U3 will follow the input of U2 (element B of the BCD). But if at any time the output of U1 should be low (which will happen for numerals 1 and 7), then the output of U3 will be forced high. The output of U3 can then be used as element E of the Baudot. Thus the aim of encoding both BCD and Baudot is achieved, and they are available simultaneously.

Obtaining the conversion to ASCII was accomplished in a totally different way. It was necessary to modify the address inputs in some way,

Numeral	a	b	c	d	e	f	g	PROM location addressed with segments a, b, e, f, g. (Decimal)
0	1	1	1	1	1	1	0	30
1	0	1	1	0	0	0	0	8
2	1	1	0	1	1	0	1	29
3	1	1	1	1	0	0	1	25
4	0	1	1	0	0	1	1	11
5	1	0	1	1	0	1	1	19
6	0	0	1	1	1	1	1	7
7	1	1	1	0	0	0	0	24
8	1	1	1	1	1	1	1	31
9	1	1	1	0	0	1	1	27

Table 1. 7-segment code.

BCD				Baudot					Numeral
D	C	B	A	E	D	C	B	A	
0	0	0	0	0	1	1	0	1	0
0	0	0	1	1	1	1	0	1	1
0	0	1	0	1	1	0	0	1	2
0	0	1	1	1	0	0	0	0	3
0	1	0	0	0	1	0	1	0	4
0	1	0	1	0	0	0	0	1	5
0	1	1	0	1	0	1	0	1	6
0	1	1	1	1	1	1	0	0	7
1	0	0	0	0	1	1	0	0	8
1	0	0	1	0	0	0	1	1	9

Table 2. BCD and Baudot.

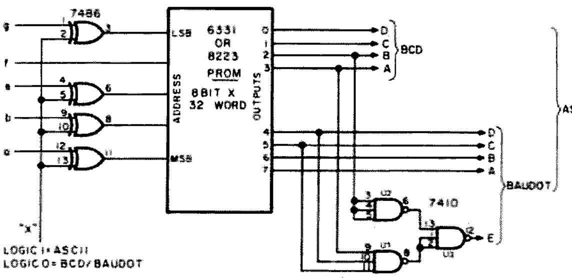

Fig. 2. Conversion circuit.

Numeral	a	b	e	f	g	PROM location addressed with segments a, b, e, f, g. (Decimal)
0	0	0	0	1	1	3
1	1	0	1	0	1	21
2	0	0	0	0	0	0
3	0	0	1	0	0	4
4	1	0	1	1	0	22
5	0	1	1	1	0	14
6	1	1	0	1	0	26
7	0	0	1	0	1	5
8	0	0	0	1	0	2
9	0	0	1	1	0	6

Table 3. 7-segment code, with a, b, e and g inverted.

so that the 7-segment would address another set of unique store locations. The only modification of the address inputs which can be done easily is controlled inversion. With the aid of a computer, all the possible combinations of inversion of the address inputs were checked, from which it was discovered there were two. And for reasons which will be given later, the following was chosen. By inverting segments a, b, e and g from the clock, the locations listed in Table 3 can be addressed, and it is in these locations that the ASCII (or any other code) is stored. The inversion is carried out with a 7486 quad exclusive OR, as shown in Fig. 2. If point X in Fig. 2 is brought high, then segments a, b, e and g of the clock are inverted, and ASCII can be obtained from the outputs of the PROM; if X is at logic low level, then the outputs obtained from the PROM will be Baudot/BCD.

The circuit given will function perfectly well with any 7-segment coding which produces a 6 without a top, and a 9 without a tail. Since some clock chips produce the 6 with a top, and a 9 with a tail, this was also given consideration. And this is the reason that of the two possible combinations of inversion of the input to the PROM, the one given was chosen. Since the tail of a 9 is given by segment c, it will have no effect anyway. But the top of the 6 will affect the most significant bit of the PROM address line, and it is necessary to allow for it. All that is required is to repeat the BCD/Baudot for the numeral 6 in another location of the PROM, and the same for the ASCII coding of the numeral 6. This information is given in Table 4.

Thus it can be seen that with the addition of 2 extra packages to the PROM, it is possible to cater for the conversion of 7-segment to ASCII/BCD and Baudot, with or without topped 6s and tailed 9s. A complete summary of the layout of the PROM is given in Table 5.

Although this conversion was designed for use with a clock chip, it could be equally well used to convert the output of other chips, such as digital voltmeters, to another code.

The PROM used was a 6331 from Monolithic Memories, but a Signetics 8223, which is easily obtainable, can be used instead. Instructions for programming the 8223 are given in the January 1976 edition of *73*, in the article "The Computer QSO Machine," by B. D. Lichtenwalner. ■

References

Monolithic Memories 6331 Data Sheet.

"The Computer QSO Machine," B. D. Lichtenwalner, *73 Magazine*, January 1976.

7-segment	a	b	e	f	g	Location 23
	1	0	1	1	1	
a, b, e, & g inverted	0	1	0	1	0	Location 10

Table 4. Allowance for topped 6s.

Address (Binary)	Address (Decimal)	Content
00000	0	ASCII Numeral 2
00001	1	Empty
00010	2	ASCII Numeral 8
00011	3	ASCII Numeral 0
00100	4	ASCII Numeral 3
00101	5	ASCII Numeral 7
00110	6	ASCII Numeral 9
00111	7	BCD/Baudot Numeral 6
01000	8	BCD/Baudot Numeral 1
01001	9	Empty
01010	10	ASCII Numeral 6
01011	11	BCD/Baudot Numeral 4
01100	12	Empty
01101	13	Empty
01110	14	ASCII Numeral 5
01111	15	Empty
10000	16	Empty
10001	17	Empty
10010	18	Empty
10011	19	BCD/Baudot Numeral 5
10100	20	Empty
10101	21	ASCII Numeral 1
10110	22	ASCII Numeral 4
10111	23	BCD/Baudot Numeral 6
11000	24	BCD/Baudot Numeral 7
11001	25	BCD/Baudot Numeral 3
11010	26	ASCII Numeral 6
11011	27	BCD/Baudot Numeral 9
11100	28	Empty
11101	29	BCD/Baudot Numeral 2
11110	30	BCD/Baudot Numeral 0
11111	31	BCD/Baudot Numeral 8

Table 5. Summary of layout of information in PROM.

Steve Ciarcia
124 Hebron Ave.
Glastonbury CT 06033

Hey, Look What My Daddy Built!

-- six TV game chip can make you a hero

"Wilbur, can't you keep those damn kids quiet while I'm making dinner?" How many American husbands have heard that? If this were the opening block on the "wordless workshop" home improvement cartoon feature found monthly in *Popular Science* magazine, the next six cartoon blocks would illustrate the construction of a giant bird cage or ski jump for the backyard to entertain the kids. This is a nice idea, but there are very few things which are universally entertaining to children, or adults for that matter – except maybe the boob tube. Today's generation of children has grown up spending more time in front of a television than in school. The TV has become a cheap babysitter and the primary source of entertainment for most American families.

Wilbur, trying to keep peace in the family, scans the TV listings and sees that he has a choice of Peyton Place reruns, a subtitled movie in Swahili and Jimmy Durante doing impressions of Walter Cronkite. His only wish at this point is that the TV set would show something that he wanted rather than what Smell-o Deodorant or Slippery Lip Ice Cream was willing to sponsor.

Wilbur checks his *Popular Science* and considers the cartooned suggestions, but decides that he might enjoy the bird cage idea too much and the ski jump would attract more noisy kids. In his continuing search through the magazine rack, he spies an article describing the construction of a TV ping pong game and decides this may be the answer to his problem. Such a system would use his existing TV – no re-education necessary – and all parts are available from a supplier listed in the article.

Wilbur spends his $140 and obtains a kit by mail a month later. He carefully lays out all the parts for the basic game plus the optional scoring board and power supply: 90 TTL ICs, assorted resistors, capacitors and hardware. His wife surveys this and pipes in with, "Do they sell that junk by the pound?"

Completely undaunted, Wilbur spends the next week, three telephone calls to the kit manufacturer, and one very expensive and frustrating visit to a TV repairman for him to set and align all the timing circuits. The kids have been thoroughly entertained in the meantime watching

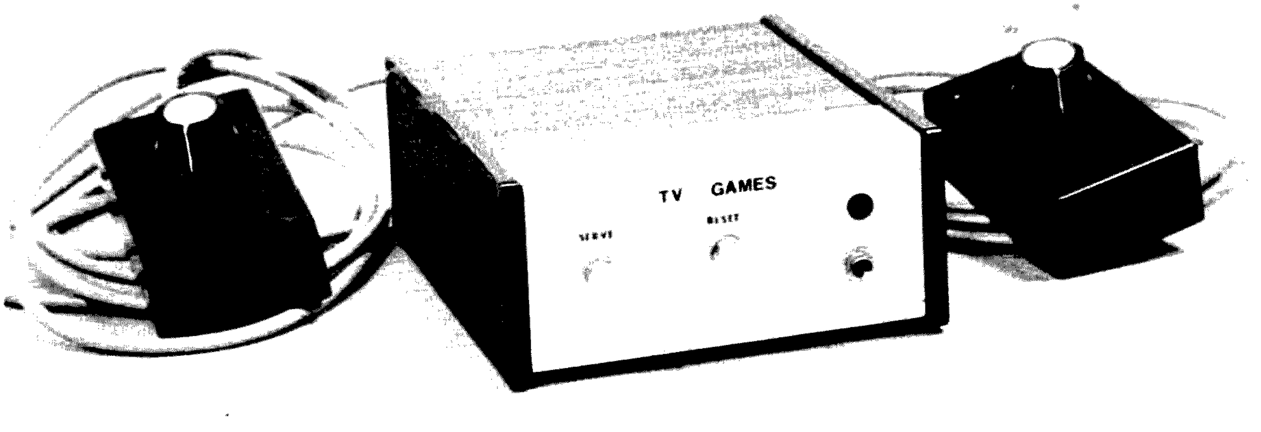

Game circuit built by author.

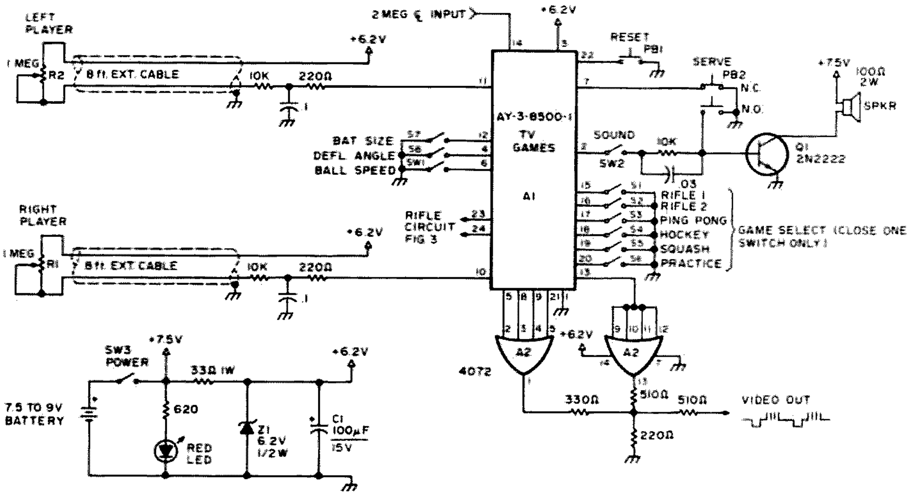

Fig. 1. TV game schematic.

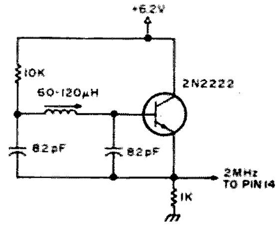

Fig. 2. 2 MHz oscillator. Miller 9055 miniature slug-tuned coil; all resistors ¼ W 5%; all caps min. 25 V ceramic.

Daddy cuss each individual component as he assembled the massive board.

Then came the moment of truth. Power on. It would be unfair to say that it didn't work. It did work and the kids were completely occupied for about three weeks. They then got tired of just bouncing the ball back and forth in the same ping pong game all the time. "Wilbur, can't you keep those kids quiet while I'm making dinner?" ARRRRG!

This painfully familiar story serves as our introduction to the world of TV games. There are TV games sold in every discount store and almost every major electronics periodical has had a construction article on them. The commercial units cost between $75 and $100 and the construction kits are about the same cost, but there are considerable differences among them. Some may be using older designs which may have as many as 100 chips to perform only one game, or at the other extreme one chip to perform six games. Obviously, Wilbur would have been better off buying a unit which performed more than one game and allowed variations within each. Fewer parts would necessarily mean a lower price and increased reliability.

The ultimate in perfection (so far) is the subject of this article: the AY-3-8500-1 made by General Instruments. This is a 24 pin MOS integrated circuit TV game chip capable of playing six different TV games. The features are as follows:

1. Six selectable games — tennis, hockey, squash, single player practice, and two rifle shooting games
2. Automatic scoring
3. Score display on TV screen: 0-15
4. Selectable bat size
5. Selectable ball speed
6. Selectable deflection angles
7. Automatic or manual ball service
8. Realistic sounds
9. Shooting forwards in hockey game
10. Visually defined playing area for the four ball games

Game Descriptions

TENNIS:

The tennis game picture on the TV screen will be as shown in Fig. 5. There will be one bat or player per side, a playing field boundary and a center net. Scoring position is as illustrated. After reset is applied, the score is 0 to 0 and the ball will serve arbitrarily from one side toward the other. It is the opposing player's objective to intersect the path of this ball and deflect it back toward his opponent. If no intersection occurs, a point will be automatically scored against the erring player and the ball will again be automatically served toward him again. Serve will not change until he scores a point and gains the advantage. A game concludes when one player's score totals 15 points.

The exact details of the game are a function of the optional speed, size, and

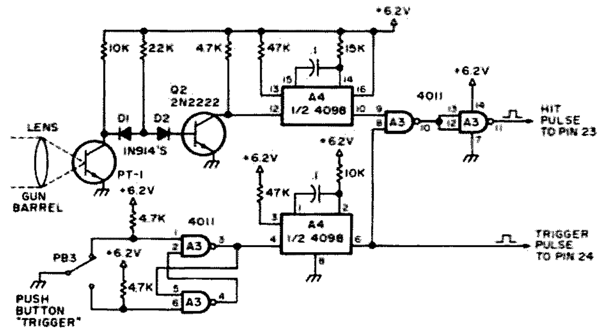

Fig. 3. Rifle circuit. PT-1 — phototransistor TIL64 or equiv.; 4098 — dual monostable; 4011 — quad 2 input NAND; all resistors ¼ W 5%; all caps min. 25 V dc ceramic.

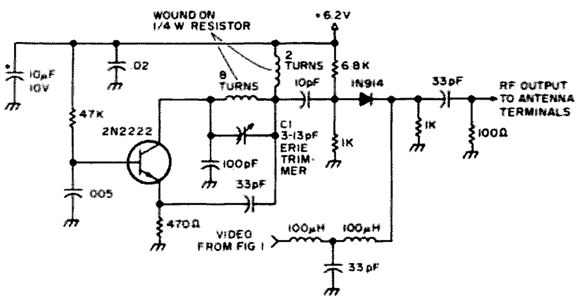

Fig. 4. VHF modulator sample circuit. All resistors ¼ W 5%; all caps min. 25 V ceramic unless otherwise noted. NOTE: THIS IS AN ILLUSTRATION OF A SAMPLE VHF MONITOR. THIS CIRCUIT HAS NOT BEEN APPROVED BY THE FCC.

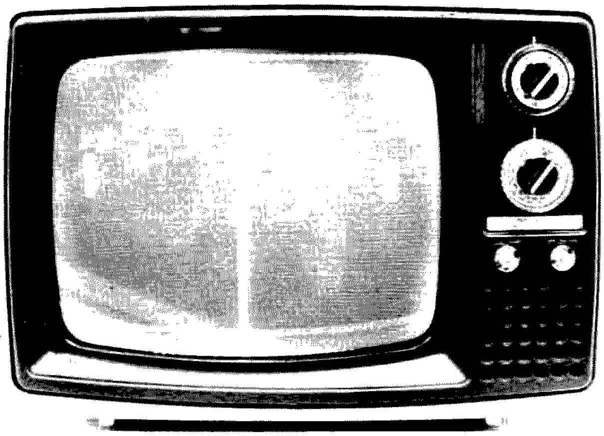

Fig. 5. Tennis game with ball in play.

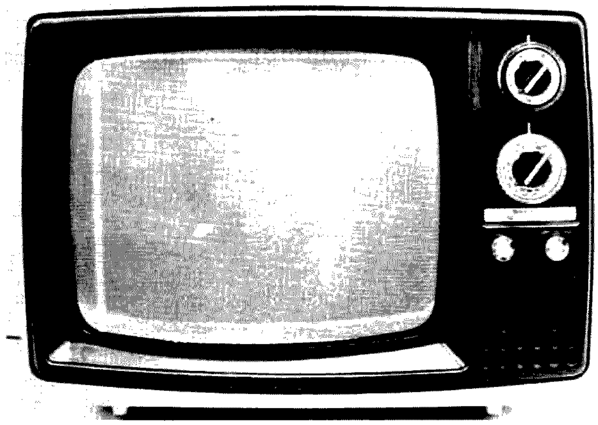

Fig. 7. Squash game with ball in play.

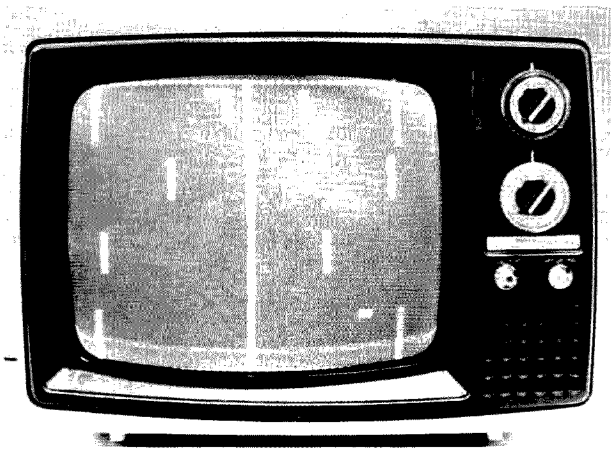

Fig. 6. Hockey game with ball in play.

angle selections. While the game is in progress, three audio tones are output to indicate boundary reflections, bat hits and scores.

HOCKEY:

The rules of the hockey game are exactly the same as the tennis game except that each human player controls two bats or players on the screen. These players shown in Fig. 6 are referred to as the goalie and the forward respectively. The goalie defends the goal, while the forward is located in the opponent's playing area. When the game starts, the ball will be arbitrarily served from one goal toward the other side. If the opponent's forward can intercept the ball, he can shoot it back toward the goal and score a point. If the ball is missed it will travel to the other half of the playing area and the opponent's forward will have the opportunity to deflect the ball toward the goal. If the ball is "saved" by the goalie or it reflects from a boundary, the same forward will have an opportunity to again try to deflect the ball back toward the goal. This method of jamming the ball between the forward and the goalie is a very effective scoring method and makes for an exceptionally exciting game.

Scoring and audio are the same as the tennis game.

SQUASH:

This game is illustrated in Fig. 7. There are two players who alternately hit the ball against a back court boundary.

Scoring and audio are the same as the tennis game.

PRACTICE:

This game is illustrated in Fig. 8 and is similar to squash except that there is only one player.

RIFLE:

The rifle game is illustrated in Fig. 9. Rifle 1 game results in a large target which randomly shoots across the screen while Rifle 2 requires that the target bounce around within the area defined by the TV screen. External circuitry listed in Fig. 3 conditions optical input to a photocell located in the barrel of a toy pistol or rifle which is aimed at this random target. When the trigger (PB3) is "pulled," the shot counter is incremented. If the rifle is on target, the hit counter is incremented.

After 15 shots the score is displayed.

Circuit Description

The simplest circuit utilizing this game chip is illustrated in Fig. 1 and shown in the photo. A DIP switch (S1-S8) is used for rarely changed functions such as game selection, rebound angle and bat size. A $2.00 eight section switch such as this serves to lower overall costs by replacing about $8.00 worth of toggle and rotary switches while maintaining miniaturization. S1 through S6 are the game selection switches. Only one of the switches is enabled or placed in the ON position. The others must be left open or the game chip will try to play more than one game simultaneously. The correct procedure for selecting a game is to turn the currently programmed game off (all six switches open) and then close the particular switch for the desired game. Switches 1 through 6 will select the following games respectively: Rifle 1, Rifle 2, tennis, hockey, squash, and practice.

Bat size and ball deflection angle are controlled by DIP switch sections S7 and S9 respectively. With S7 open the larger bat size is selected. On a 21" television screen this will appear to be about 2". When this switch is in the closed position, small bats of approximately half the previous size will be displayed. All paddle game photos in this article illustrate the large bat selection.

When first playing a TV game, a player may want to find his bearings and fine tune his eye-hand coordination. For just this reason General Instruments provided for selectable bounce, or deflection angles. When S8 is open, three rebound angles are enabled – plus and minus 20 degrees and straight back

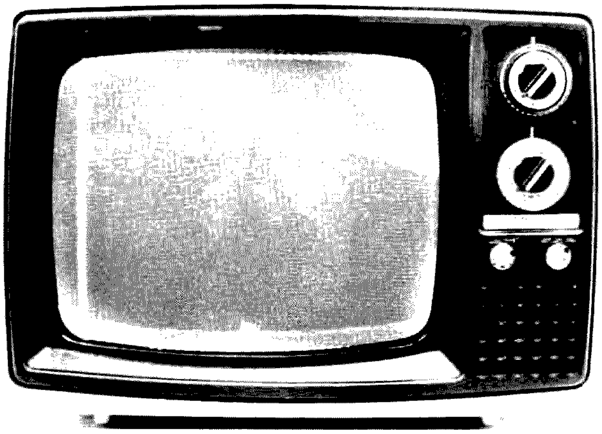

Fig. 8. Practice game with ball in play.

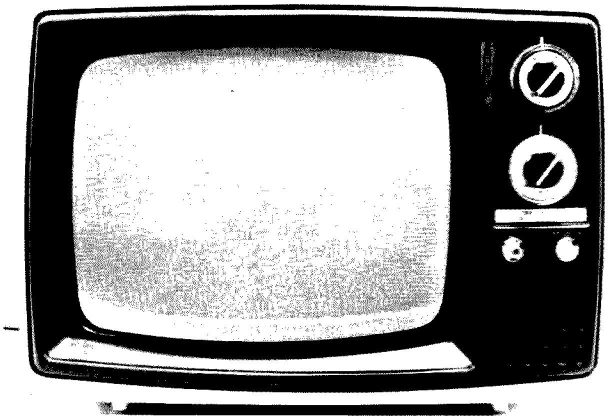

Fig. 9. Rifle games 1 and 2 target.

at 0 degrees. With S8 closed, five rebound angles are possible – plus and minus 20, plus and minus 40, and 0 degrees. This latter selection requires considerable player skill and dexterity and adds new dimensions to otherwise repetitious games. If that were not enough, selectable ball speed is also available. The ball speed switch SW1 is used more often than the game select switches and therefore should be a more easily used slide switch. When this switch is open, low speed is selected. In this mode the ball takes 1.3 seconds to traverse the screen. When the switch is closed, high speed is chosen and the ball will dart across the screen in .65 seconds. There is a complete understanding of the concept of human fallibility after playing a game which combines small bat size, full rebound angles, and a fast ball speed. With this combination, the cure for boredom becomes electronically induced insanity.

If these features were not sufficient, there are more – realistic sound and automatic scorekeeping. All games consist of 15 points with both players starting with a score of zero after pushing the game reset button (PB1). With pin 7 grounded through the manual serve push-button (PB2), play will resume automatically upon the release of the reset button. Automatic start is signified by the game ball being arbitrarily served into the playing area, and each time a point is scored, the ball will come into play into the court defended by the player having scored the point. If automatic start is not desired, the reset and serve buttons should be pressed simultaneously when resetting a game. The reset button is then released while still depressing the serve button. This will allow complete player readiness and will only put the ball in play when the serve button is finally released. Score is incremented (up to a high of 15) each time a player fails to deflect a ball away from goal.

All of this rebounding and scoring results in some very interesting game sounds. A ball hit upon a paddle results in 32 milliseconds of 976 Hz tone. A boundary reflection is 32 milliseconds (msec) of 488 Hz tone and score is 160 msec of 1.95 kHz tone. This square wave oscillation is amplified by a 2N2222 transistor and applied to a 100 Ohm .2 Watt speaker. (An 8 Ohm speaker may be used with proper current limiting in the collector circuit.) SW2 is provided to switch off the sound without having to shut off the game. Player positioning is remotely controlled through cables attached to pins 10 and 11 of the game

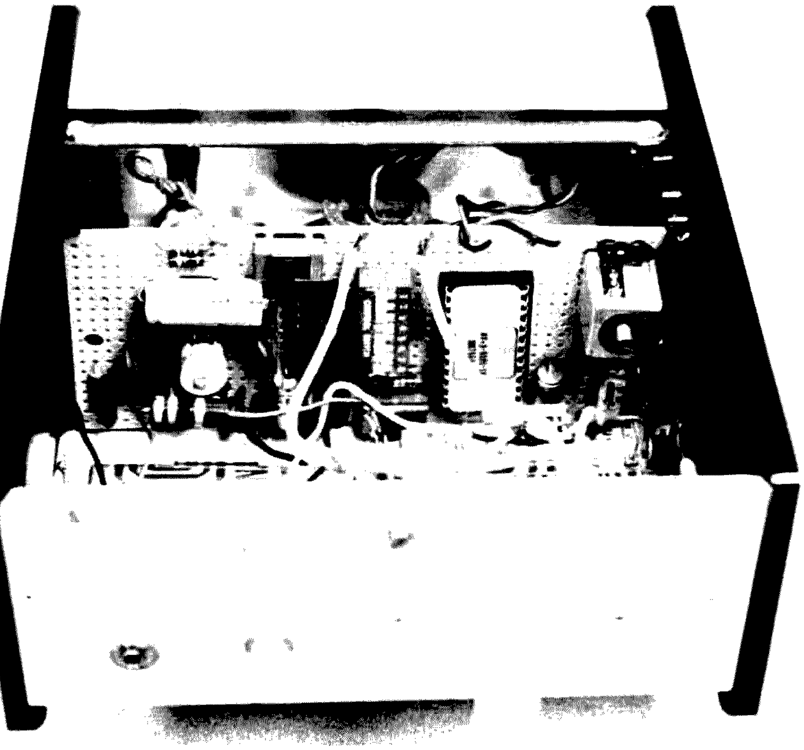

Inside of author's game unit illustrating parts layout.

Parts List for Figs. 1 and 3.

A1	AY-3-8500-1 MOS game chip General Instruments
A2	4072 Dual 4 input OR gate CMOS RCA
A3	4011 Quad 2 input NAND CMOS RCA
A4	4098 Dual monostable CMOS RCA
Q1, Q2	2N2222 or equiv.
S1-S8	8 position DIP switch Gray Hill or equiv.
PB1, PB3	SPST momentary push-button C & K Subminiature
PB2	DPST momentary push-button C & K Subminiature
SW1, 2	SPST slide switch Alco Subminiature
SW3	SPST toggle switch C & K Subminiature 3 A 115 V ac
PT-1	TIL 64 phototransistor or equiv. Texas Instruments
D1, D2	1N914 diode Texas Ins.
C1	100 uF electrolytic 15 V dc
Z1	1N753A or equiv.
R1, R2	1 meg composition potentiometer 2 Watt Allen-Bradley or equiv.
SPK	100Ω .2 Watt speaker
LED	NSL5053 LED or equiv.

All resistors are ¼ Watt 10% unless otherwise indicated.
All capacitors are ceramic type with min. voltage ratings of 25 V dc unless otherwise indicated.

MISC	extension cable, batteries, box, hook up wire, etc.

chip. Each player control consists of a 1 meg pot and .1 microfarad capacitor which combines to form a variable time constant utilized by internal timing circuitry. Longer or shorter time constants will result in relatively different vertical player positions. To reduce noise, this extension cable should be shielded; otherwise, a display malady referred to as "herringbone effect" will result.

For a TV game to be properly displayed on a raster scan television, the proper video signal, similar to that of any commercial TV station, must be applied to the antenna. Such a video signal results from synchronized dividers inside A1, which divide the 2 MHz master clock (Fig. 2) and output the required 60 Hz vertical and 15750 Hz horizontal sync signals. These signals from pin 13 are combined with those of the ball output, right player output, left player output, and score and field output (pins 5, 8, 9, and 21 respectively) in a two bit digital to analog converter formed with a 4072 CMOS dual 4 input OR gate. This type of video output is referred to as composite video output and is suitable only for use on video monitors and not standard televisions. This video output may in turn be used to amplitude modulate an rf carrier suitable for a standard television receiver. Fig. 4 illustrates a sample circuit of this basic type of modulator. With the components chosen, the frequency is approximately that of VHF channel five. (This circuit is intended for illustration only and acceptability by the FCC as a proper class 1 rf modulator is not inferred.) The modulator output is connected directly to the TV antenna terminals, with the antenna disconnected, and adjusted for the best reception.

This game is a marvel of engineering ingenuity through which General Instruments has succeeded in enlightening the average American to the latest advances in electronic technology. It is easy to overlook 16K bit RAMs and microprocessors, but it is hard to ignore such a marvelously exciting TV game when presented on your own home television. ■

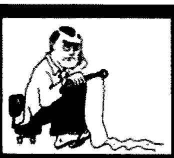

. . . de W2NSD/1

NEVER SAY DIE

EDITORIAL BY WAYNE GREEN

from page 4

system that is just like RTTY, but with the break-in feature.

If RTTY operators wanted to, they could have break-in just by setting up their systems on two different frequencies. Then they could use a split CRT display such as Don Alexander has developed (August, page 82), to show both what they are sending and what they are receiving on the top and middle of the tube. If anyone gets into this I'd like to know about it, and so would a lot of RTTYers.

Not a few readers would probably like some hints on how to get their code speed up to 100 wpm . . . any volunteers?

UNEMPLOYED?

The politicians are talking a lot about jobs, yet here at *73* we have jobs going begging. We need help in several departments and would be absolutely delighted to have some hams come up here to fantastic New Hampshire to join us.

If you read *Newsweek*, you know that New Hampshire has one of the lowest tax rates in the country, yet provides very good services for the people. It has one of the lowest accident rates in the country on its roads. This despite the large influx of visitors who come to New Hampshire on vacation . . . four seasons of the year. We have large vacation crowds in summer when it is cool and beautiful. We have them in the spring when it is fantastically colorful and fresh. We have them in the fall to see the finest foliage in the world (except for a small part of Northern China where they have similar acid earth which generates these colors) . . . and winter! Winter is the best season of them all . . . not too cold, but with snow for the many ski slopes.

For the ham, New Hampshire has two major advantages . . . one is rarity . . . New Hampshire has few people so you are almost like DX on many of the ham bands. And, if you are into FM, the myriad of mountaintop repeaters throughout the state will keep you busy. You will be hard put to keep from finding a mountain for yourself.

In southern New Hampshire we are not too far from Boston . . . for plays and concerts . . . and a major airport for travel. Yet we are in the country. Peterborough is one of the most beautiful towns in New England. Even though it is very small, it is a shopping center for this part of the state, with downtown shopping and two shopping centers on the outskirts of town.

We have grown considerably during the last year at *73* . . . with circulation up over 30% since January and headed for a 50% increase by the end of the year. Advertising has increased almost 50% in the past year. The staff has almost doubled and there is still a need for more.

While we can use people with printing or magazine experience, the biggest demand is for editors. We need two or three more, at least, if we are going to continue to grow and put out more books and magazines. We are looking for hams with as much experience in hamming as possible . . . hopefully with good technical backgrounds . . . who are into working more than clock-watching.

We have a dozen books in the works for release soon and we would like to increase this to a hundred . . . if only we had the hams to help get them ready for printing. We'll need help with getting a new CB magazine started . . . and with a new hobby computer magazine. We need a lot more help in getting *73* out each month. We need help in marketing the books, magazines and tapes . . . through direct mail, dealers, newsstands, reps, etc. The more readers we get, the more people will be able to enjoy the magazine every month.

If you have the background, a bunch of enthusiasm, are a self-starter and don't have to be told what to do . . . if you like working in a very unusual and relaxed atmosphere, . . . if you are work-oriented . . . if you would like to live in a beautiful part of the country . . . you can do worse than let us know about it.

A GOOD BOOK

A good book indeed is the *Handbook for Electronic Engineering Technicians*, for $19.50. The price is high, but this is an excellent book and well worth the investment. The material is a bit brief for the book to be used strictly as a study guide, but as a handbook . . . as a reminder of how just about everything you'll run into in electronics works, it is superb. The math is kept to an absolute minimum and every subject is covered concisely. McGraw-Hill. If you are at all serious about understanding electronics, you just can't do without this new book.

Silas S. Smith Jr. WA9VFG
2308 McCord
Murphysboro IL 62966

A TTL Tester

--great for unmarked bargain ICs

Being economically minded by necessity, I have often purchased unmarked, untested semiconductors at really bargain prices. This practice has necessitated the construction of special test equipment.

One such piece of test equipment was designed to test TTLs. This TTL tester is an expanded version of a very simple diode tester. The simplicity of this diode tester should not be allowed to downgrade its usefulness. See Fig. 1.

Using this diode tester, the breakdown or zener voltage of a diode or transistor can be quickly determined. Transistors can be classified, after some experience in using this simple tester, into small or large signal, low or high voltage, oscillators, amplifiers, switching, high or low leakage, etc. It also indicates an open or short which makes it useful for a continuity tester.

A built-in calibration source can be added with the addition of one or more zener diodes and switches. See Fig. 2.

The TTL tester is this same basic diode tester with a few more components and a 5 V source (Fig. 3). Any 5 V dc power supply can be used but should be protected from overload by a fuse or current limited output because of a TTL short or human error. Phone tip jacks are used for test points, with external test connections being made by jumper wires with phone tips. See Fig. 4.

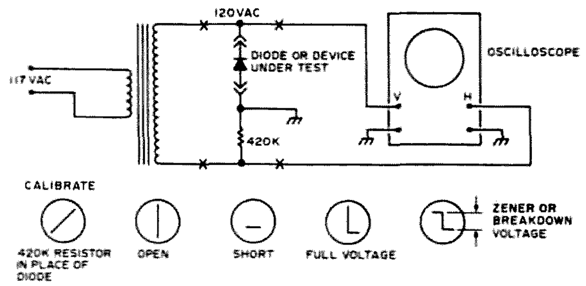

Fig. 1.

Operation

For an unknown TTL, place the TTL into the test socket and turn power on. The vertical probe is inserted into the CAL TP and the scope adjusted as in Fig. 5a. Use an educated guess or flip a coin to choose a TP that would ordinarily be ground, such as TP4 or TP7. Say, for example, that we choose TP7.

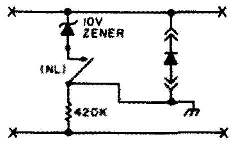

Fig. 2.

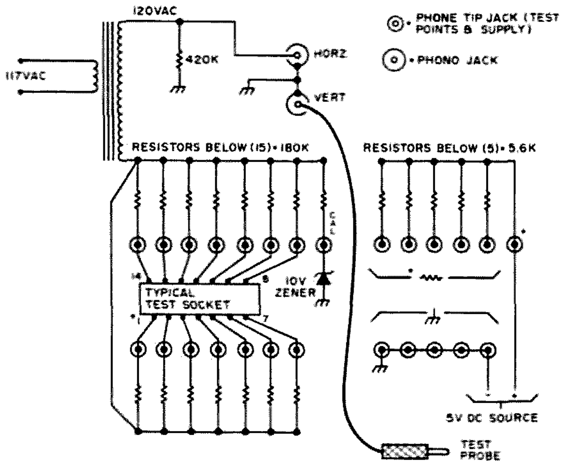

Fig. 3.

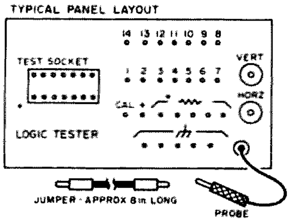

Fig. 4.

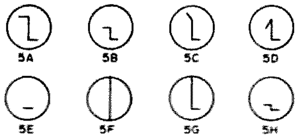

Fig. 5.

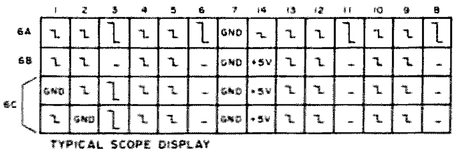

Fig. 6.

A jumper would then be placed from a ground TP to TP7. The vertical probe is then moved to each TP, TP1 through TP14. The display on the scope (Fig. 6a) may be similar to any figure of Fig. 5, but we are looking for one that is decidedly different, or the oddball. Say in our example we have only one that looks like Fig. 5h on TP14. It would appear that we have made a wise choice of TP7 for our ground because + and - are usually on 14 and 7 as one combination for TTLs. Reasonably sure that TP7 is our ground, we once again take the vertical probe through TP1 to TP14 with a ground on TP7. A record (mental if you like) can be made of each TP test as in Fig. 6. Connect +5 V to TP14 with a jumper. This will operate all gates, etc. Check each test point again with the vertical probe. A change of state will be noted as in Fig. 6b. In our example, a change of state occurred at test points 3, 6, 11 and 8 for a total of four changes; thus we may have a quad device. Next we monitor the points of change using the vertical probe. The first in this example is TP3.

A single jumper lead from ground is moved to each test point of no change. In our example, the ground jumper lead of TP1 changes the state of TP3. See Fig. 6c. Removing the lead from TP1 restores the state of TP3. Placing the jumper of TP2 changes the state of TP3, etc. (Fig. 6c). Moving on to TP4, 5, 13, 12, 10, 9, we note no change on TP3. In our example, we find the same relationship between TP4, 5, 6 and TP13, 12, 11 and TP10, 9, 8. The example was a 7400 TTL (Fig. 7) which is a quad 2 input NAND gate TTL. A study of several known TTLs will give you the experience necessary to use this simple tester. The number and type of jumpers will of course depend upon the TTL under test. The 7451 TTL for instance requires two jumpers.

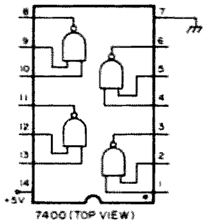

Fig. 7.

In the end we will know what the circuit is and its maximum breakdown voltage (Figs. 5b, c, d, g) as well as whether it is an open collector (Fig. 5d) or if the circuit is open or shorted (Figs. 5e, h) and most importantly, whether it is working properly. ■

Dan Stogdill VE3DWC
182 Victoria Street
St. Marys, Ontario N0M 2V0

How to Check Memory Boards

-- use this simple program

While the computer hobbyist faces many trials and tribulations during his quest to get his fabulous (and complex) new toy "up and running," one of the most frustrating problems that he can encounter involves debugging a troublesome memory board. This article describes a simple memory diagnostic program, and illustrates its use in tracking down problems in memory. While not a "cure-all" for all memory related problems, especially those that render the complete board inoperable, it will allow the hobbyist to "exorcise" those gremlins responsible for such irritations as memory locations which refuse to store the exact data which you load into them, and addresses which appear to change their contents as though they had a mind of their own.

The two problems which are presented for illustrative purposes are real-life "bugs" which cropped up following the recent assembly of two 4K memory boards. Note that the program and associated debugging technique which evolved were developed for an Altair 8800 (but should be applicable, with appropriate modifications, to other systems).

At this point, a few words concerning the memory diagnostic program (Table 1) are in order. (Ignore those parts of the program in parentheses, for the time being.) The program, as presented, resides on page 2, address 000-041 (octal). This address was chosen because I already had a simple "MONITOR" residing on pages 0 and 1, and I was certain that page 2 had no "bugs," due to the fact that other small programs which resided there from time to time performed their appointed duties without difficulty. The program can be placed on any other page (change memory references accordingly), assuming that you are certain that the chosen page has no "bugs" which would interfere with the program's operation. Needless to say, the program can be placed on a correctly operating board, and used to debug all 4K of other appropriately addressed boards. The only restriction concerning placement of the program is that the page(s) to be tested must be different from that page on which the program resides ... hence, my choice of page 2.

The program also assumes that you have an octal conversion and print subroutine ("OCTOUT") which it can call. Since this is generally a part of most monitors, it is not included here.

Operation of the program is straightforward. The program loads the value of an address, as data, into that address. For example, address 000 contains data 000, address 001 contains 001, etc. Then the computer compares the contents of the address with the numerical value of the address; if they differ, the program will print out the address and its incorrect contents. Since this method is not infallible, those parts of the program in parentheses are utilized to load and compare specific patterns of data in memory, if necessary. To employ this modification, simply substitute the parts of the program in parentheses for the existing parts. The

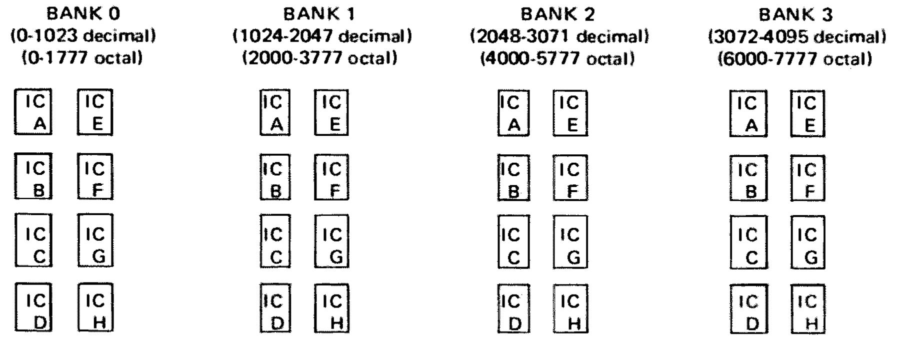

Fig. 1. 4K memory segment of 2102s.

need for the modified program will be made clear in due course.

DEBUG	002-000	046		MVI H	Load H & L registers with starting address of memory segment to be tested
	002-001	XXX		Page to tested	
	002-002	056	MV	MVI L	
	002-003	000			
	002-004	000	(006)	NOP (MVI B)	Store pattern into entire memory page
	002-005	000	(YYY)	NOP (RAND NUM)	
NEXT	002-006	165	(160)	MOV M,L (MOV M,B)	
	002-007	054		INR L	
	002-010	302		JNZ	
	002-011	006		NEXT	
	002-012	002			
AGAIN	002-013	176		MOV A,M	Compare routine (& jump to "dump" if error found)
	002-014	275	(276)	CMP L (CMP B)	
	002-015	302		JNZ	
	002-016	027		DUMP	
	002-017	002			
CONTIN	002-020	054		INR L	Continue comparisons
	002-021	302		JNZ	
	002-022	013		AGAIN	
	002-023	002			
	002-024	303		JMP	Execute program again
	002-025	000		DEBUG	
	002-026	002			
DUMP	002-027	117		MOV C,A	Print out error address & contents
	002-030	315		CALL	
	002-031	237		OCTOUT	
	002-032	000			
	002-033	115		MOV C,L	
	002-034	315		CALL	
	002-035	237		OCTOUT	
	002-036	000			
	002-037	303		JMP	Continue comparisons
	002-040	020		CONTIN	
	002-041	002			

Table 1. Memory diagnostic program.

Some Basics

Before proceeding further, a general discussion of a 4K memory board is in order. These boards usually employ 2102s or a reasonable facsimile thereof, and have the chips arranged in 4 banks of 8 chips each (see Fig. 1). The particular bank chosen is a function of a two-to-four decoder, which decodes address lines 10 and 11. Fig. 2 is a schematic and truth table of a typical circuit.

The active output of the decoder circuit pulls down the eight pin 13s of the particular bank of 2102s being addressed, thus enabling that particular bank.

Table 2 illustrates the address decoding with regard to each bank and the associated 256 word pages therein. The particular page in a bank is a function of the state of address lines A8 and A9. Remember, to activate a given page or address, the appropriate address pins on the chip are pulled down.

Each chip within a bank corresponds to a particular bit, 0-7.

Case 1

Symptoms ... program data loaded into pages 6 and 7 was full of errors when dumped. Testing of pages 6 and 7 with the unmodified program produced the results illustrated in Table 3. Since errors resided in pages 6 and 7, we can localize the difficulty to bank 1 (refer to Table 2). Notice that the contents of the addresses which contain errors are augmented by 004. This points to a problem with bit 2 (chip C) in block 1. The fact that the problem showed up only on pages 6 and 7 seems to indicate that whenever address bit A9 was active, chip C on bank 1 contained a 1 ... producing the 004. Perhaps an internal short in that chip. Substitution of the identified chip corrected the problem.

Case 2

Symptoms ... interaction between pages 4 and 5; specifically, data entered into page 4 changed some ... only some ... data in page 5. Initial use of the memory diagnostic program as in case 1 indicated no errors, although it was known that the pages were interacting. At this point, pages 4, 5, 6 and 7 were loaded with 000 using the modified memory diagnostic. An octal dump of these pages indicated that all were zeroed. The next step consisted of loading the pattern of 144 into page 4. The memory diagnostic and octal dump confirmed that page 4 contained all 144s. However, an octal dump of page 5 revealed that, although it had not been reloaded, it now contained 040s (i.e., bit 5 was always set). Since it is page 5, our problem resides in bank 1 (refer to Table 2), and because it is 040, the problem is associated with chip F in bank 1 (see Fig. 3). Now, since the error popped up on page 5 although page 4 was the one being addressed, it

Fig. 2. Typical decoder circuit (and truth table) for decoding address lines A10 and A11 to choose the appropriate bank of 2102s.

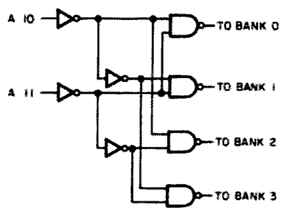

Address Lines –	A11	A10	A9	A8	A7	A6	A5	A4	A3	A2	A1	A0
Decimal Weight –	2048	1024	512	256	128	64	32	16	8	4	2	1

	A11	A10		
Bank 0	0	0	–	0 – 1023_{10} – pages 0-3_8
Bank 1	0	1	–	1024 – 2047_{10} – pages 4-7_8
Bank 2	1	0	–	2048 – 3071_{10} – pages 10-13_8
Bank 3	1	1	–	3072 – 4095_{10} – pages 14-17_8

Table 2. Address decoding with regard to bank and page selection.

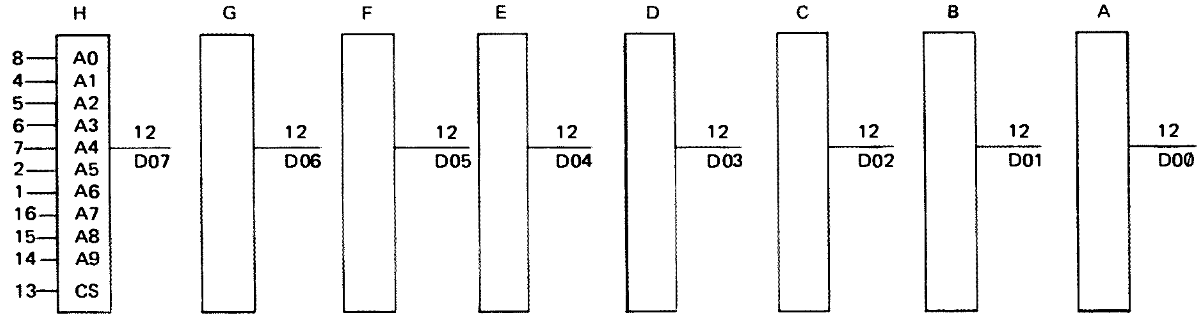

Fig. 3. The logic state of each 2102 in the bank of 8 contributes to the value of the data word at a given address. Note that each 2102 corresponds to one bit in an 8 bit word.

would suggest that A8 on chip F in bank 1 was going low (remember A8 and A9 determine the particular page in a bank that is being addressed). Manual addressing

000	004	010	014
001	005	011	015
002	006	012	016
003	007	013	017

Table 3. Typical readout from "DEBUG," illustrating address and errors (partial) of Case 1.

of page 4 from the display/control board and activation of the examine switch, indeed, showed that A8 on chip F in bank 1 was low. The corresponding pins of other chips in this bank were high. It turned out to be a case of the pin not making contact in the socket. Removal of the chip revealed that pin A8 had been bent underneath upon insertion. Straightening the pin and reinserting the chip (with care) corrected the problem.

Conclusion

The above procedure is relatively straightforward and best of all does not require any sophisticated equipment. In fact, you already possess the two most important pieces – the computer itself and "ham ingenuity."

The program also is relatively simple as memory diagnostic programs go. I would recommend that a number of patterns be tried with the modified program to ensure that all possible bits and consequently all possible chips in a bank be tested. Embellishments such as these could be built into the program by the software connoisseurs among us. Space doesn't permit elaborating upon other possible sources of memory problems. However, the technique of isolating the bank, the chip, and the appropriate pins has been presented and, hopefully, will be of value when a memory problem occurs. Happy troubleshooting. ■

I/O REPORT

from page 95

bi-phase data signal, which is then applied directly to the recorder input. The high reliability of this technique stems from the fact the data and clock are recorded together and recovered together. Therefore, speed variations in an inexpensive recorder are essentially ignored.

The dip switches mounted at the bottom center of the board (see photo) are set up for the device select code ("device address"). The audio cables to the recorder are soldered to the board via the dip plug located in the top center of the board. There are two empty sockets provided for expansion and/or modification. The LED located at the top of the board is used for adjusting the read level (in conjunction with the volume control on the recorder) and eliminates the need for an oscilloscope for initial adjustments.

It's always a pleasure to plug something into a system and have it work the first time. That is exactly what happened when we plugged the Tarbell unit into our Altair. The only "problem" we encountered was toggling the read and write routines into the Altair by hand (since a terminal wasn't connected at the time) using the HEX listings provided in the manual. (Toggling hexadecimal into an octal front panel does require a few mental adjustments on the part of the toggler!)

Don Tarbell, the owner of Tarbell Electronics, is one of the pioneers in this hobby, inasmuch as he designed and built his home system from scratch back in 1972. (He also developed a BASIC interpreter, assembler, text editor, operating system, and some sophisticated artificial intelligence software for the system.) He is one of the founders of the Southern California Computer Society, and is currently serving on the board of directors. In other words, it would appear that Tarbell Electronics is in tune with the hobby community and its needs. (Incidentally, his next offering for the Altair community will be a Universal I/O and ROM board.)

Contact: Tarbell Electronics, 144 Miraleste Drive #106, Miraleste CA 90732. Phone: (213)-832-0182. $120 for complete kit or $175 assembled and checked out. The 22-page manual is available at $4, which is deductible from your order. Suggestion: Go ahead and order the Processor Technology software package at the same time you order the cassette – it's worth it!

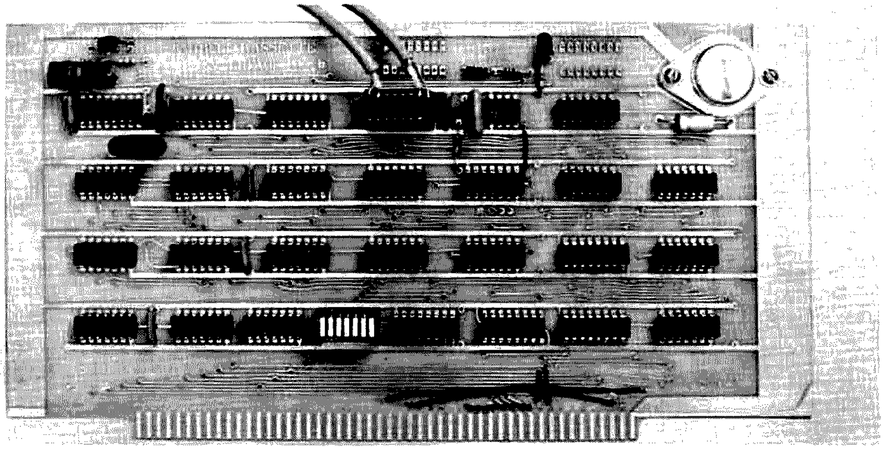

The Tarbell Cassette Interface.

F. Barry McWilliams W2HBY
68 South Mesier Ave.
Wappingers Falls NY 12590

The New Ham Programmer

-- making those confounded uPs work

Can today's amateur radio operators program one of the microprocessor systems that are so much in vogue? Are these microprocessor systems worth anything to today's amateur? This article is about computer programming. There are a number of fundamental concepts involved in programming today's computers; these fundamental concepts apply to the under-fifty-dollar microprocessor, to an IBM 370 and to just about everything in between. The concepts behind programming a computer are really very simple, and the amateur radio operator is already familiar with the basic ideas. In order to clarify the concepts and relate them to ideas with which we are familiar, this article will go through an exercise examining a typical ham radio contest summary sheet, with the goal of finally writing a computer program which will calculate the contestant's score.

In the 1st Annual Hypothetical Contest, your score is determined by multiplying your total number of QSOs by one (1) if your power input is greater than 100 Watts, or by two (2) if your power input is less than or equal to 100 Watts.

For this contest, the summary sheet shown in Table 1 has been provided to simplify the contestant's scoring.

This summary sheet illustrates some of the important concepts of computer programming. Though not really a concept, the first observation which must be made is that the summary sheet is easy to follow, simple-minded and somewhat tedious.

A computer operates under the control of a *stored program;* in this example, the summary sheet presented is analogous to the stored program which controls the computer. The *CPU* (Central Processing Unit) interprets the program instructions just as our hypothetical contestant reads and interprets the instructions on the summary sheet. In a computer, both the program and data are stored in a memory; the summary sheet is the memory upon which the printer has stored the program, and the contestant stores his data within the boxes provided. The contest summary sheet analogy illustrates one more important concept upon which the usefulness of modern computers is built: *transfer of control* based upon a logical operation (as illustrated in line 2 of the summary sheet). On this line, the contestant's power input (a previous calculation) is compared with 100 Watts, the contest rule for determining the QSO multiplier. Based on this comparison, the contestant is directed to go to either line 5 or, by implication, to continue to the next sequential line. As a general rule, the organization of CPUs is such that the program is executed one step at a time, sequentially, in the order in which the instructions appear, until a transfer of control operation is encountered (the "go to" on line 2), which changes the order in which the instructions are executed.

Flow Charts

A flow chart is a graphical method of describing a process. The process we are concerned with is programming a computer, and a flow chart can be used as an aid in the design and documentation of computer programs. There are a number of standard flow charting symbols which are universally understood in the computer programming community. Since this article is not meant to be a course in flow charting, I will introduce just two flow charting symbols (Fig. 1) and present a flow chart (Fig. 2) which describes the process of calculating the score for the Annual Hypothetical Contest.

The flow chart in Fig. 2 is one of many possible representations of the summary sheet process. In this chart we see the introduction of the idea that the variables in the calculation can be given names: POWER, PLATE.VOLTS, PLATE.CURRENT, SCORE and QSOs. The names chosen have some meaning to the reader who has followed through the contest scoring example. Quite a few details have intentionally been left out of the flow chart; the flow chart is designed to give an overall idea of what is to be accomplished. It is worthwhile to note at this point that we could just as well have started with the flow chart and evolved the summary sheet as an implementation of the process described by the flow chart. With reference to our summary sheet, the value PLATE.CURRENT is entered in the box on line b, the value of SCORE is entered in the box on line 10, etc. On the summary sheet, the instruction on line 2 is the implementation of the decision block in the flow chart.

Before we can consider how the Hypothetical Contest summary sheet calculations can be done with a program in a computer, we must take a few minutes to describe the computer itself. For this discussion, the INTEL 8080 will be our CPU. The INTEL 8080 is probably the most popular of the 8-bit microprocessors; however, the programming ideas presented here apply generally.

The INTEL 8080 is a very simple device; it can add, subtract, make logical comparisons and transfer control. The 8080 has seven 8-bit *registers*, a 16-bit *stack*

1. Calculate your final input POWER (see lines a-c)

2. If your POWER is less than or equal to 100 go to line 5

3. Take the number of QSOs (line 9) and put this number in SCORE (line 10)

4. STOP

5. Take the number of QSOs (line 9)

6. Multiply the number of QSOs by two

7. Enter the product in SCORE (line 10)

8. STOP

9. Number of QSOs

10. SCORE

Power Calculation:

a. Multiply the PLATE CURRENT (entered in line b) by the PLATE VOLTAGE (entered in line c), return to the next line in the Summary Sheet

b. PLATE CURRENT

c. PLATE VOLTAGE

Table 1. First Annual Hypothetical Contest summary sheet.

pointer and a 16-bit *program counter.* The stack pointer, though very important to making full use of the power of the 8080, will not be discussed here. The program counter is quite simply a pointer to the instruction to be executed. Relating to the summary sheet example, the program counter may be thought of as your index finger pointing to each line of the instructions as you read the line. Before our program is started, the program counter register must be initialized to point to the first instruction in the program; from then on, the program counter will automatically go through each instruction of the program as it is executed.

The seven 8-bit registers are named A, B, C, D, E, H and L. The A register is also called the *accumulator* and is used in the arithmetic operations such as addition and subtraction; typically, numbers in other registers are added to or subtracted from what is in the accumulator with the result being left in the accumulator. The other registers have various uses; in our program we will use only the B and C registers. All of the registers may be used to save results of computations. Since most computations change the A register, it is convenient to be able to save results in other registers which may be referred to in subsequent steps of the program; in our program, we will use the C register to save the result of the POWER calculation.

An instruction for the 8080 is made up of an operation code *(OP code)* and an *operand.* For example, an addition instruction would be coded for the 8080 as ADD C. The OP code is ADD and the operand is C. From INTEL's documentation we find that the instruction ADD C adds the contents of the C register to the contents of the accumulator and leaves the result in the accumulator. Generally, the operand can be either a register or a storage location; the instruction, LDA 0400, *loads* the contents of storage location 0400 into the accumulator.

The 8080 program used to compute contest scores is shown in Table 2. The left-hand column is the address (in hexadecimal) where each instruction or variable is stored in the computer's memory. The second column from the left shows the contents of each memory location in hexadecimal. In the case of instructions, the content of the memory location is the operation code which the CPU decodes to determine what instruction is to be executed. You may notice that the memory addresses in the left-hand column seem to increment in some random manner. The reason for this strange progression of address locations is that instructions for the 8080 occupy from one to three storage locations. The very first instruction in the MAIN PROGRAM starts at memory location 0100. This instruction is a CALL instruction which transfers control to a *subroutine;* the operation code for this instruction is "CD" and the starting address of the subroutine is location 0250. A pair of hexadecimal digits occupy one storage location, so the operation code "CD" occupies location 0100 and the address 0250 occupies locations 0101 and 0102.[1] The next instruction, MOV C,A, will therefore start in the next available location, namely 0103.

The third column from the left lists the computer instruction in a more readable way than the hexadecimal notation in the second column. MOV is a move instruction, LDA is load the accumulator, STA is store the accumulator, etc. In truth, this program was written as seen in column three and subsequently translated into the machine instruction codes shown in column two.

The fourth column contains comments about the program and indicates the use

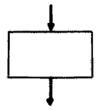

Process Block — *This block describes a process or operation such ad addition, multiplication or the like. The process flow is thought of as entering the top of the block and leaving the bottom.*

Decision Block — *This block describes a decision (such as "is something greater than something else") which is made in the process. The process flow is thought of as entering the top of the block; a decision is made within the block which determines from which of the output legs the process will continue.*

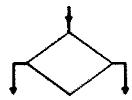

Fig. 1.

[1] The architecture of the 8080 requires the low order address of the operand in the location immediately following the OP code, and the high order address in the second location following the OP code. Here, location 0101 will contain 50 and location 0102 will contain 02.

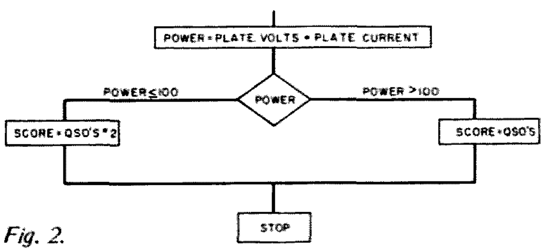

Fig. 2.

MAIN PROGRAM:

0100	CD 0250	CALL 0250	CALL SUBROUTINE TO CALCULATE POWER
0103	4F	MOV C,A	MOVE POWER FROM A REG TO C REG
0104	3A 0207	LDA 0207	GET THE VALUE 100 (THE VALUE 100 IS STORED IN LOCATION 0207)
0107	91	SUB C	100 (IN REG A) – POWER (IN REG C)
0108	FA 0113	JM 0113	JUMP ON MINUS TO 0113 JUMP IF POWER GREATER THAN 100
010B	3A 0209	LDA 0209	GET #QSOs IN REG A FROM LOCATION 0209
010E	87	ADD A	MULTIPLY BY 2 BY ADDING THE #QSOs IN REG A TO ITSELF
010F	32 0208	STA 0208	STORE RESULT IN 0208 WHICH HAS BEEN ALLOCATED TO SAVE THE SCORE
0112	76	HALT	
0113	3A 0209	LDA 0209	GET #QSOs IN REG A FROM LOCATION 0209
0116	32 0208	STA 0208	STORE IN LOCATION 0208 WHICH HAS BEEN SET ASIDE TO SAVE THE SCORE
0119	76	HALT	

DATA AREA:

0201	00		CURRENT (TO BE FILLED IN WITH CONTESTANT'S PLATE CURRENT)
0202	00		VOLTAGE (TO BE FILLED IN WITH CONTESTANT'S PLATE VOLTAGE)
0207	64		100 DECIMAL
0208	00		SCORE CALCULATED BY PROGRAM
0209	00		#QSOs (TO BE FILLED IN WITH CONTESTANT'S NUMBER OF QSOs)

POWER SUBROUTINE:

0250	3A 0201	LDA 0201	GET CURRENT
0253	4F	MOV C,A	PUT CURRENT IN REG C
0254	3A 0202	LDA 0202	GET VOLTAGE
0257	47	MOV B,A	PUT VOLTAGE IN REG B
0258	3A 0201	LDA 0201	GET CURRENT
025B	05	DCR B	DECREMENT REG B (REG B STARTED OUT WITH THE VOLTAGE WHICH WILL BE THE NUMBER OF TIMES CURRENT WILL BE ADDED TO ITSELF TO FORM THE PRODUCT CURRENT*VOLTAGE)
025C	C8	RZ	RETURN IF ZERO . . . DONE
025D	81	ADD C	ADD THE CURRENT IN REG C TO THE SUM BEING ACCUMULATED IN REG A
025E	C3 025B	JMP 025B	GO TO LOCATION 025B

NOTE: THE PRODUCT CURRENT * VOLTAGE IS FORMED BY ADDING CURRENT TO ITSELF VOLTAGE TIMES. FOR EXAMPLE, IF THE VOLTAGE IS 5 AND THE CURRENT IS 3, THE PRODUCT CURRENT * VOLTAGE = 3+3+3+3+3 = 15

NOTE: THE RESULT IS RETURNED TO THE MAIN PROGRAM IN THE A REGISTER

Table 2.

of storage locations in the data area of the program (locations 0200 – 0209).

NOTE: The values used in this program are *decimal*. In reality, the values stored in memory would be in hexadecimal or octal. A conversion routine and an output routine would be necessary if it were desired to output these numbers in decimal to a TTY or TVT. Therefore, the decimal values are used for simplicity.

The computer program is just about as straightforward as possible, but it is worth the time to go through each instruction examining what each does and why it is there.

The first instruction in the *main program* is a call to a subroutine. A subroutine is simply another part of the total program which does some function; in this case, the subroutine calculates the power of the contestant and saves the result in the accumulator (A register) of the computer. The call instruction essentially transfers the execution of the program to a specified location in the computer memory; in this program, the subroutine to calculate power is at memory location 0250. When we get into the discussion of the power subroutine we can consider the calculations in more detail; at this point it is sufficient to note that the CALL 0250 will do the desired calculation and continue on to the next instruction. The idea behind the notion of subroutines is similar to the first instruction on the summary sheet. The precise instructions for calculating power are not part of the summary sheet; rather, these instructions are set apart in lines a-c just as the instructions for calculating power in the computer program are set aside at memory locations 0250 through 0260.

Having calculated the contestant's power, the next thing which must be done is to check whether the con-

testant's power is greater than one hundred Watts in order to determine the multiplier; the three instructions starting at location 0103 do just this. First, the power calculated by the subroutine is moved to register C for safekeeping (MOV C,A); then the accumulator is loaded from storage location 0207. Since location 0207 was set up to contain the number 100 decimal (64 in hexadecimal), the accumulator now has 100 in it; SUB C subtracts the contents of the C register from the contents of the accumulator. Recalling that register C contains the contestant's power, the accumulator, after the SUB C instruction, contains 100-POWER. Notice that if the power is greater than 100 Watts, the above calculation will result in a minus number. The instruction JM 0115 at location 0108 completes the test on the contestant's power; this Jump-on-minus instruction (JM) will jump (transfer control) to location 0115 if the previous subtraction resulted in a minus number. The Jump-on-minus instruction is an implementation of the transfer of control from the decision block in our flow chart; just as the decision block had two different exit paths depending upon the results of the decision, the JM instruction controls the flow of the program: either to the next sequential location (010B) if not minus, or to location 0115 if minus.

If the contestant's power was less than or equal to 100, the next instruction executed is the LDA 0209 at location 010B. This instruction loads the accumulator with the contents of location 0209. Location 0209 is set aside to hold the number of QSOs, so the accumulator will be loaded with the number of QSOs that our contestant had during the contest. Since we are now considering the case where the final score is determined by doubling the QSO count, we can accomplish the desired doubling by simply adding the accumulator (number of QSOs) to itself; ADD A adds the contents of the accumulator to the contents of the accumulator, effectively multiplying the contents of the accumulator by two. Finally, the contestant's score is saved in memory location 0208 which has been set aside to save the SCORE; STA 0208 stores the contents of the accumulator in storage location 0208.

Statement Number	Command (Instruction)	Comment
10	INPUT P	Input power (P) value from TTY or TVT
20	INPUT Q	Input number of QSOs (Q) from TTY or TVT
30	IF P = >100 GOTO 50	Decision statement regarding power (100 Watts or greater?)
40	PRINT "SCORE= " Q	If the value for Q (#of QSOs) were 1,632 (decimal, mind you), the printout on the TTY or TVT would be: SCORE = 1,632
45	GOTO 99	Go to end of program
50	Let S = 2 * Q	Calculate score (S) if power less than 100 Watts (2 times Q)
60	PRINT "SCORE=" S	Printout of score (same as in statement number 40)
99	END	End of program

Table 3.

Remember the JM instruction at 0108? This instruction transferred control to location 0115 if the power was greater than 100. Now we must consider what must be coded for the computer to execute at location 0115. In this case, the power was greater than 100; all we want to do is take the number of QSOs as the SCORE. LDA 0209 loads the accumulator from the location set aside for the contestant's QSO total, and STA 0208 stores the contents of the accumulator in the storage location set aside for the SCORE.

The calculation of the contestant's power is done by the subroutine at storage location 0250. The INTEL microprocessor does not have a multiply instruction, so another approach must be taken by the programmer who wants to perform the calculation, POWER = CURRENT*VOLTAGE. Multiplication may be thought of as the summation of the multiplicand, with the multiplier specifying the number of times it is to be summed. For example, to multiply 10 by 6 we can add 10 together 6 times: 10*6 = 10 + 10 + 10 + 10 + 10 + 10 = 60. We shall use this approach to multiply current by voltage to get the power. Register B will be loaded with the value of the voltage, and every time we add the current to the sum being accumulated in register A, we shall also decrement register B. When register B becomes zero, we have added the current together voltage times.

Rather than going through each instruction as we did in the main program, let us look at the new instructions introduced in the subroutine code. MOV B,A moves the contents of the A register into the B register; since the A register had just been loaded with the voltage, MOV B,A moves the voltage into the B register. As mentioned above, the B register will be decremented each time the current is added to the A register; DCR B does just this.

The return instruction, RZ at location 025C, transfers control to the storage location immediately following the CALL instruction in the main program when register B is decremented to zero. Special hardware in the CPU keeps track of where the CALL instruction was executed so that the return instruction can return to the instruction which follows the call. With this call and return facility, it is possible to call the power calculation subroutine from any other program which may want to make such a calculation. Admittedly, this subroutine is not very sophisticated, but envision the possibility of writing more sophisticated subroutines which calculate logarithms, trigonometric functions, etc. Once such subroutines have been written once, other programs can take advantage of them by simply calling them. Many higher level languages such as FORTRAN are implemented with a library of subroutines; a FORTRAN statement such as A = SQRT(47.667) is executed by calling a subroutine which calculates the square root of the arbitrary value 47.667.

By now you are surely convinced that computer programmers must be a weird bunch to put up with such a dumb animal as the computer. The program so laboriously presented will make the calculations required for the contest scoring problem, but it has some severe restrictions. To point out just one of these, notice that one

storage location has been allocated to save the contestant's score. One storage location is 8 bits in length; this allows our contestant to accumulate a total score of only 255. This is, of course, a limitation, but not one which can't be overcome. It involves having another subroutine which will receive the value and convert it into a fixed or floating point value occupying more than just a single storage location. A better way to get around all of these problems is the use of a *higher level language*. Several references have been made to FORTRAN (which is a higher level language), but let's take a look at how BASIC can solve some of the above problems. BASIC can also very easily take care of some of the problems mentioned earlier, such as hex-to-decimal, or octal-to-decimal conversion, and input and output routines. For example, the BASIC program in Table 3 will perform the same functions as our earlier program, and also take care of the "problems."

It's quite evident from this program that BASIC is an easy language to use, and did a very satisfactory job of solving the task (and in very few statements). The disadvantage (if you want to call it that) is that we are now somewhat removed from the machine. The previous machine language program required that we get to know the machine, its operation, and architecture in order to program it. This can certainly be more challenging at times and also allow you to do some things you can't with a higher level language such as BASIC.

Yes, today's ham radio operator can program a microprocessor. The real challenge lies in finding applications which are well suited to the microprocessor's capabilities. ■

Rich Didday
1218 Broadway
Santa Cruz CA 95062

The Soft Art of Programming

-- getting started with BASIC

Here are some interesting and worthwhile ideas for the beginning programmer, and some reminders (or review) for the experienced. – Ed.

Okay. So my microcomputer kit finally showed up in the mail, and I put it together. I watched the panel lights blink for a few days, then I had some friends over to look at it. They looked at me with sort of a funny smile and said, "But what are you going to *do* with it?" I grabbed for a copy of *73* and riffled through it searching frantically for Wayne's editorial, mumbling, "You know, anything you, uh . . .", but they were already out the door, smiling and saying they had to get back because "Mary Hartman, Mary Hartman" was going to be on in a few hours.

I knew it wasn't my breath, and I was wearing a clean shirt. There was no way around it; I was going to have to learn how to program.

Actually, programming a computer can be tremendous fun. Also tremendously rewarding and, let's face it, tremendously frustrating if you go about it wrong. In this article, I'm going to give some tips about learning to program, in the hopes of keeping you on the fun side instead of the hair pulling side. I'm not going to try to teach you to program – that would take a whole book. No, I'm going to give you some things to try, suggest a few books that will be useful, outline some important ideas to keep in mind, and give some examples of how to write programs. You'll get the most out of this if you read it again every so often as you get farther and farther into programming. Don't take anything I say as gospel – try to prove me wrong! Above all, have a good time.

Programming is like planning a task. The idea is to figure out how to express some overall action that you want the computer to do in terms of elementary building blocks, just as circuit design consists of putting together simple components to do a complex overall process. All the examples here assume that the building blocks are the legal statements and forms of BASIC, but the *ideas* apply to any computer language, including machine language.

Let's assume that you have enough hardware to run 8K Altair BASIC or the equivalent, and that you've been able to decipher the manuals well enough to get the BASIC system loaded into your machine. The first thing to do is learn what the basic building blocks are, and to start seeing how they can be fit together.

Phase I: Building Blocks

The key to learning to program is to keep having fun. Keep tinkering! Start with a one or two line programs, say

```
100 PRINT "GREETINGS!"
200 END
RUN
```

(Remember to hit the "RETURN" key at the end of each line.)

Keep RUNning it and adding in new statements to see what happens.

Variable	Type	Use
M$	string	name of magazine
I	numeric	number of issues per month
Y	numeric	length of subscription in years
C	numeric	cost of subscription
P	numeric	per issue cost
A$	string	answer to "any more" question.

Table 1.

```
100 PRINT "GREETINGS!";
150 PRINT A
200 END
RUN
```

(Look in your manual to find legal statements and to find what keys to hit to wipe out mistakes.)

Every time you find something that works, keep playing around with it.

```
100 PRINT "GREETINGS!";
120 LET A=1
150 PRINT A
200 END
```

Loops are very important ways to get a short program to do a lot of work. Start writing some infinite loops like the one below and watch what happens. Of course, you'd better find out how to stop one "by hand" (in Altair BASIC and many others, holding down the "CONTROL" key and a "C" together will stop your program).

```
100 PRINT "GREETINGS!";
120 LET A=1
140 LET A=A+1
150     PRINT A
170     REM: GO BACK
171     REM: FOREVER
180     GO TO 140
200 END
```

(Notice how indenting the statements in the loop makes them stand out.)

Write programs that fill up your screen or printout with crazy, wild patterns:

```
10 PRINT "GARBAGE";
20 GO TO 10
30 END
```

Fairly soon you'll get a feeling for how the basic units work and you'll want to have more control over what your programs do and write bigger programs that do definite tasks. A good book will help a lot.

Phase II: Book Learning

Books written specifically for home computer users will be coming out soon — in the meantime, here are some that seem pretty good.

My Computer Likes Me (When I Speak in BASIC) by the crew at the People's Computer Company (also available from *73*): a nice, mellow, friendly, encouraging but very brief introduction. If you're starting completely from scratch, begin here, then move on to a book that covers more material.

BASIC by Samuel L. Marateck, Academic Press, 1975: moves at a very patient pace, and has lots of examples. Unfortunately, a lot of the early examples are obviously just made up on the spur of the moment and don't demonstrate how to use the statements in the context of meaningful problems. Recommended if you find that one of the other books goes too fast for you.

BASIC by Michel Boillet and Lister Horn, West Publ. Co., 1976: moves a little faster, has nice question and answer sections, and has loads of good problems at the end of each chapter. Many of the problems and examples are business oriented (accounting, interest payments, etc.), so if that's one of your interests, this may be the book for you.

Computers: Their Impact and Use: Basic Languages by Robert Lynch and John Rice, Holt, Rinehart, and Winston, 1975: The first half has a broad overview of computing — history, applications, future projections. The second half covers programming in BASIC, moves fairly rapidly, and includes quite a few nice, real world examples.

BASIC Programming by John Kemeny and Thomas Kurtz, John Wiley, 1971: the "old standard" (Kemeny and Kurtz invented BASIC). The book moves quickly and may be hard to follow if your high school math is too rusty, but it has lots of really clever examples. If you can get through it, you'll get a lot out of it.

More are coming out all the time, so keep your eyes open for one that suits your needs.

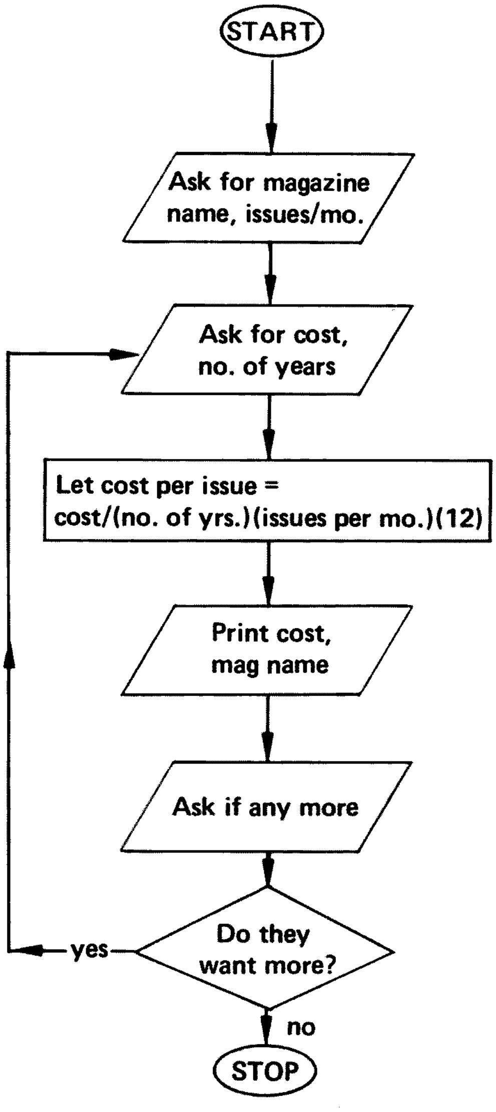

Fig. 1.

In using these books, there are three main problems. First, all except *My Computer Likes Me* are written for classroom use. This means that they have a fairly formal style (you have to get *teachers* to like it if you want to sell a textbook), and that they go fairly fast (they assume your teacher will explain what's going on sometimes). If you take your time, try everything out on your home system as you go, and ask a friend for help when you get really stuck, you'll be able to get loads of useful, fun ideas from any of them. Well worth the effort.

Second, since there are no agreed upon standards for BASIC (they're coming soon, thank grid!), you'll find that you have to translate some of the little details before programs in the book work on your system. Your manual will tell you what symbol to type to wipe out the last character, whether to type "NEW" or "SCR" or whatever to start entering a new program, etc. Usually you'll find that your system allows some statements and commands the book doesn't and vice versa. Fortunately,

```
10 REM:PROGRAM TO COMPARE VARIOUS SUBSCRIPTION
11 REM: DEALS.
20 REM:GET MAGAZINE NAME, PUBLICATION RATE.
30 PRINT "WHAT'S THE MAG";
40 INPUT M$
50 PRINT "HOW MANY ISSUES PER MONTH";
60 INPUT I
70 REM:NOW GET DETAILS OF SUBSCRIPTION DEAL.
80 PRINT "HOW MANY YEARS IS SUBSCRIPTION FOR";
90     INPUT Y
100    PRINT "AND HOW MUCH IS IT (IN DOLLARS)";
110    INPUT C
120    REM:COMPUTE PER ISSUE COST (#ISSUES=I*Y*12)
130    LET P=C/(I*Y*12)
140    REM:OUTPUT THE COST PER ISSUE
150    PRINT " "
160    PRINT "THAT'S $"; P; "PER JUICY, FUN-PACKED ISSUE
                                              OF ";M$
170    PRINT " "
180    PRINT " "
190    REM:MORE?
200    PRINT "WANT TO CHECK ANOTHER DEAL";
210    INPUT A$
220    IF A$="YES" THEN 80
230 REM: DONE. MAKE A GRACEFUL EXIT.
240 PRINT "THANKS A BUNCH . . . SEE YOU LATER."
250 END
RUN
WHAT'S THE MAG? 73
HOW MANY ISSUES PER MONTH? 1
HOW MANY YEARS IS SUBSCRIPTION FOR? 1
AND HOW MUCH IS IT (IN DOLLARS)? 10

THAT'S $ .833333 PER JUICY, FUN-PACKED ISSUE OF 73

WANT TO CHECK ANOTHER DEAL? YES

HOW MANY YEARS IS SUBSCRIPTION FOR? 2
AND HOW MUCH IS IT (IN DOLLARS)? 17

THAT'S $ .708333 PER JUICY, FUN-PACKED ISSUE OF 73

WANT TO CHECK ANOTHER DEAL? YES

HOW MANY YEARS IS SUBSCRIPTION FOR? 3
AND HOW MUCH IS IT (IN DOLLARS)? 20

THAT'S $ .555556 PER JUICY, FUN-PACKED ISSUE OF 73

WANT TO CHECK ANOTHER DEAL? NO
THANKS A BUNCH . . . SEE YOU LATER.
```

Table 2.

these are mainly advanced features and you'll be in shape to figure them out yourself by the time you get to them.

Third, the books concentrate more on specifics of BASIC than on the more general, problem-solving aspects of programming. That is, they treat a program as an end in itself, without much concern for the facts that when you write a program you're really going to *use* it, that you'll want it to be easy to debug (correct), easy to upgrade later, easy to use in conjunction with other programs, easy to share with other people, etc. All these things mean that it's crucial to be able to write well-organized programs, programs that are easy for *human beings* to understand.

Phase III: Structured Programming

The ideas here will be more understandable after you've written a number of programs. The goal is to make your programs easier for humans (including yourself, of course) to understand by getting you to think about organizing them clearly right from the start.

The general sequence of events in writing a program should be:

1. Make a clear statement (in English) of the problem.
2. Make a flowchart and/or write a verbal description showing the main subparts of the solution and how they fit together.
3. Make a more detailed flowchart or verbal description of each subpart.
4. Once you're sure what each subpart is to do, translate the flowcharts or descriptions into BASIC (or whatever language you're using this week), inserting your descriptions at the beginning of each subpart as comments (REMark statements). This aspect of the programming process is often called *coding*. Note the analogy with coding in radio work — you do want to be able to go from a verbal description (message) to BASIC (Morse) and back quickly and easily, but you don't try to *think* in BASIC (Morse).
5. Don't be satisfied with your first version of a program. Make an extra effort to precede each INPUT or READ statement by a PRINT or REMark which tells exactly what the values will be used for.

Make sure the flow of control is as easy to follow as possible. Indenting groups of statements makes them stand out in the listing, and makes it easier for people to identify important subparts of a program.

Often you will find that rewriting a few statements to straighten out the flow of control will help. People usually find that GO TO statements break their concentration as they look at a program, so if you can find a clear way to redo part of your program so it uses fewer GO TOs, you'll be better off. Here are two examples. The first versions do the same thing as the second ones, but seem easier to follow. See what you think.

```
100 LET X=X+1
110 IF X<=N THEN 50
         :
130

100 IF X>=N THEN 130
110 LET X=X+1
120 GO TO 50

130
         :
```

```
100 REM: A=POSITIVE(X)
110 LET A=X
120 IF X>=0 THEN 150
130    LET A=0
         :
150

100 REM: A=POSITIVE(X)
110 IF X<0 THEN 140
120    LET A=X
130    GO TO 150
140    LET A=0
150
         :
```

The main idea is to be patient, and keep refining your program. You'll make fewer mistakes as you go, your program will be easier to modify, easier to use and easier to understand.

You might think that these suggestions go overboard in asking for neatness and tidiness, that just sitting down at the old keyboard and bashing your program out would be faster and more fun. Try it! Keep track of how long you spend debugging a program compared to how long you spent designing it. Even when you've been very careful, you'll probably find that more time goes into debugging. If your program was a real mess to begin with, you may even find that you *can't* debug it without doing the design phase over again!

Now that we've got all those guidelines under our belts, let's follow through a simple example from start to finish.

Problem Statement:

Figure out the price per issue of a magazine for a number of different subscription offers.

First refinement:

Ask user for magazine name and number of issues per month. Deal: Ask for details of subscription. Figure out cost/issue, print answer. Ask if any more deals to be considered, if so, go to Deal; otherwise, stop.

Second refinement:

See Fig. 1.

(In a program this small, one refinement is probably enough, but the more the merrier.)

In a large program, it's easy to forget what you're doing and use the same variable name for different purposes, sometimes with disastrous results. It's a good idea to make a list of each variable, its type, and what you think you're using it for (see Table 1).

After I coded the flowchart in BASIC, entered it into my computer, corrected a few misspellings, LISTed it and ran it, what I got is shown in Table 2.

You might find it fun to copy this program and modify it. Put in another loop (driven by an appropriate question to the user) which goes back to statement 30 so rates for a different magazine can be checked. Add in wilder messages to the user. Have fun!

As your programs get bigger and bigger, the organizational principles I mentioned become more and more important, and a number of other guidelines become useful. Also, since most of our home computers don't have very much memory to spare, ways of saving space while leaving programs understandable become important. In Part 2 we'll see some of these ideas and we'll go over the design and coding of a bigger program. Meanwhile, happy programming! ■

This magazine is loaded with ads for beautiful computers you can own for the price of a better transceiver. Most have keyboards, CRTs, and tape and disk capabilities. These machines are truly computers. What you can do with them is limited only by your ingenuity. Computers can compute, and store and retrieve data. Tape and disk storage is extremely inexpensive, and you can keep mountains of information on your bookshelf. It would be a shame to pass up getting one of these computers just because you think you'll never be able to program it. Most of these minis use the BASIC language, one of the easiest of all computer languages. My aim in this article is to show you how easy it is to program in BASIC, and to start you off, so that when your new computer arrives you'll be able to make sense out of the manual and start right off having fun.

BASIC was well named. It is very basic, and also very simple. It has a minimum of rules, and is practically the same on every computer that uses it. The differences usually are very slight. For example, one manufacturer requires LIST 200,300 to display program statements 200 to 300 on the screen, while another has you type LIST 200-300. Most of the differences are really added capabilities that one computer has, and that others don't have. So you should still look over the manual before starting to program.

Like any language, BASIC has language elements – components that make up the language. They are *statements, variables, literals, functions,* and *statement numbers.*

Statements are commands which tell the computer to perform a specific task, such as PRINT, or READ.

Variables are items which are assumed to contain a value which can change. They are not necessarily the same each time the program runs. These correspond to the letters used in algebra, like x, y, and z. Their value is usually unknown before the program is started, but, whatever their value is, the program handles a *variable* the same way whenever it is encountered. So, in a program to print a series of addresses, there may be a *variable* to represent zip code. Each address may have a different zip code, but the program does not know, and does not care. It does the same thing with each one. BASIC has two kinds of variables: *numeric* and *string.*

Numeric variables are used to hold numbers to be used in arithmetic. You can add, subtract, multiply, and divide numeric variables. They can contain up to 16 digits. BASIC will not let you put anything but numbers into numeric variables. Numeric variables are represented in BASIC by a letter, or a letter followed by a number. Examples are S or Z1. S can stand for salary, sum, or whatever you want. Z1 could mean zip code or oranges.

Not all data is numbers, however. You may need to represent data containing letters, or numbers, or both. BASIC uses *string variables* for this. They can contain anything. They cannot be used in arithmetic. You represent them by a letter and a dollar sign (e.g., Y$). So N$ could mean *name* in your program, A$ could mean address, and Z$ could be zip code, since it is unlikely you will ever use zip code in arithmetic. There usually is some kind of limit to the number of characters a string variable can contain, but 64 is typical.

Literals are easy. They do not represent anything except themselves. They are taken literally. So "Hi there" means the string of characters "Hi there." Just as there are two kinds of variables, there are two kinds of literals: *string* – letters and/or numbers, and *numeric. String literals* must be enclosed in quotation marks. Everything between the quotation marks is the literal – even spaces. This is the only place where BASIC pays any attention to spaces. *Numeric literals* are never enclosed in quotation marks, and they can be used in arithmetic (for example, 3.14 or 73).

Functions are short cuts built into the language to accomplish things that would be difficult to program (for example, the square root function SQR). Every time you need the square root of a number you say SQR(X) and you get its square root without further ado.

Every line of a BASIC program has a *statement number.* Just put any number from 1 to 999 in front of a basic statement – as, for example, 100 PRINT "THIS IS LINE 100". Remember that BASIC will execute the program statements in order, so statement number 100 will get done before 1020. Usually you number the very first statement 100 and number each line 10 greater than the previous.

When BASIC sees a numbered statement, it assumes it is program code, checks it for

BASIC? What's That?

--the basics of BASIC

Gabriel F. Gargiulo WA1GFJ
17 Whitney Street
East Hartford CT 06118

correct syntax, and enters it into memory. If there is something wrong with it, BASIC will print it on the CRT and point out the error. When you correct it, it is entered into memory.

Let's look at some BASIC and identify the elements found in it.

```
100 LET S$ = "THE SQUARE
    ROOT OF 25 IS"
110 LET A = 25
120 LET D = SQR(A)
130 PRINT S$, D
```

100, 110, 120, 130 are statement numbers. S$, A, and D are variables. You tell me which are numeric and which are string. "THE SQUARE ROOT OF 25 IS" and 25 are literals. You should be able to tell which is numeric and which is string.

You must be eager to start writing your first program. We will be doing that shortly, but we have to learn what the pieces are before we can put them together. We just have to look at some statements, and then it's on to our first program.

PRINT. You have already seen the most useful statement, PRINT. PRINT displays the value of a variable, or a literal, on the CRT.

```
90 PRINT "PROGRAM
   STARTS"
100 PRINT B
110 PRINT "PROGRAM ENDS"
```

LET. LET does more than you would expect. Use it to give a value to a variable.

```
100 LET P = 3.14
110 LET S$ =
    "THE VALUE OF PI IS"
120 PRINT SS, P
```

LET also lets you do arithmetic.

```
100 LET X = 73 + SQR(83)
```

You can make two variables equal with LET.

```
100 LET X = B
110 LET Z$ = B$
```

You cannot mix types. 100 LET X = Z$ is illegal.

LET can even be left out.

```
100 X = B
110 Z$ = B$
```

IF and GOTO. Modifying the sequence of your program can be accomplished through the use of the IF and GOTO statements. You can use IF to test the value of a variable, or to see if it is equal to, greater than, or less than another variable, or an expression. Depending on the outcome of the test, you can skip to another statement in the program. The symbol for "equal to" is =. "Greater than" is >, "less than" is <, and "not equal" to is <>. So if you want to go to statement 5100 if A$ contains "END," write 100 IF A$ = "END" THEN 5100. To go to statement 5700 if A$ and B$ are unequal, write 2100 IF B$ <> A$ THEN 5700. Here is a short segment of a program that will divide R into 4, and print the answer, unless R is zero.

```
100 IF R = 0 THEN 200
(Program sequence modified
using IF and GOTO)
110 B = 4/R
120 PRINT B
130 GO TO 300
(Program sequence modified
using IF and GOTO)
200 PRINT "DIVISION BY
    ZERO IS IMPOSSIBLE"
300 END
```

You are almost ready now. Consult your computer's manual to find out how to get things started. On a BASIC-only computer you may have to do only one thing before keying in your program. You will have to turn on the power. On bigger computers with other languages you may have to type in something like EXEC BASIC before starting. BASIC tells you it is ready to accept program statements by printing "READY" or "OK" on the screen. Then you type in line numbers and program statements. If you type one in that is wrong, simply retype the whole line. To delete a line, type in the line number — nothing more. When satisfied, type RUN and your program will execute.

Here is a short program to try out as soon as your mini arrives. It is called "OHMS LAW." If you give it any two of the three variables, E, I, or R, it computes the unknown.

```
100 PRINT "ENTER E IN
    VOLTS, Ø IF UNKNOWN"
110 INPUT E
120 PRINT "ENTER I IN
    AMPS, Ø IF UNKNOWN"
130 INPUT I
140 PRINT "ENTER R IN
    OHMS, Ø IF UNKNOWN"
150 INPUT R
155 IF E + I + R = 0
    THEN 600
160 IF E = Ø THEN 300
170 IF I = Ø THEN 400
180 IF R = Ø THEN 500
190 GO TO 600
300 E = I*R
310 PRINT "E = ";E
320 GO TO 600
400 I = E / R
410 PRINT "I = ";I
420 GO TO 600
500 R = E / I
510 PRINT "R = ";R
600 PRINT "WANT TO DO
    ANOTHER? Y/N";
620 INPUT R$
630 IF R$ = "Y" THEN 100
640 END
```

Here's a rundown on the few BASIC statements that we haven't talked about yet.

DIM. DIM has nothing to do with the console lights on your computer. It sets up the dimensions (size) of a variable. Most computers establish a default size for each type of variable. Check your manual to find out what it is. You can change the size of a variable with DIM. DIM A$ 30 means that the size of A$ is now 30 characters.

If you have a variable representing a name, and need it to be large enough to hold 30 characters, you had better tell BASIC about it. You do this by using a DIM statement in the following form: 10 DIM N$ 30. DIMs have to come at the beginning of the program, so give them the lowest line numbers.

You can also use DIM to define arrays. An array is a multiple occurrence of a variable. So, if you want N to have 10 different values, you must define N as an array. Use a DIM with the number of times you want the variable repeated in parentheses. DIM N(10) establishes 10 variables in memory, called N(1) through N(10). In the body of your program you can refer to any one of the 10 by putting its number in parentheses after the variable (i.e., a *subscripted variable*). So, to print the fifth value of N, code 10 PRINT N(5). For example:

```
50 N(1) = 3.95
60 N(2) = 7.25
```

This sets the first value of N to 3.95 and the second to 7.25. The numbers in parentheses are subscripts, or indices. Variables can also be used as indices.

```
100 A = 1
110 B = 2
120 N(A) = 3.95
130 N(B) = 7.25
```

This will give the same results as the preceding example.

Here's a short program which stores a series of numbers in an array, then does some computation on each one, and prints out the result.

```
10 DIM F(6)
100 DATA 3.95, 7.25, 14.32,
    28.6, 50.3, 144.4
110 FOR X = 1 TO 6
120 READ F(X)
130 L = 468 / F(X)
140 PRINT L
150 NEXT X
999 END
```

READ. The way data files are set up depends very much on the particular computer. You had better read the manual on this one. There is a simple form of READ, however, which is common to all machines. You include the data to be read in your program, with the DATA statement. Place the DATA statement and its data anywhere

in the program; for example:

```
980 DATA 28.6, 21.37, 14.28,
7.25, 3.95, 146.79
```

Then, to read each item of data, use the READ statement. Each time READ is executed you get the next item in the list.

```
READ F
```

Every time you reach this READ statement, you get the next value in the list placed in the variable F.

You can only reach the READ statement as many times as there are items in the DATA statement. Therefore, in the above example you can only execute the READ 6 times. If you do it 7 times the program comes to a premature end – it aborts.

FOR . . . NEXT. FOR and NEXT go together. For every FOR there must be a NEXT. In combination the two are used to execute a section of your program repeatedly (in other words, set up a loop).

```
100 FOR X = 1 TO 20
110 PRINT X
120 NEXT X
130 END
```

FOR in this example sets X equal to 1. Then control drops through to the PRINT and the NEXT. NEXT adds 1 to X. If X = 20, then control falls through to statement 130; otherwise it goes back to 110. In this example, statement 100 is done 20 times, each time with X being incremented. You can set X to any beginning or ending value (well, almost any value). If you want some number other than 1 to be added to X each time the NEXT is encountered, add the word STEP and the number added to X. So, to set X equal to 32, adding 3 each time, and stopping when X is equal to 73 (or greater) code:

```
100 FOR X = 32 TO 73 STEP 3
110 PRINT X
120 NEXT X
```

The X, or whatever variable you use here instead of X, can be used as an index with an array. This is a handy and efficient way of getting at all the values in an array.

```
10 DIM F(5)
100 FOR X = 1 TO 5
110 PRINT F(X)
120 NEXT X
```

This will print each value of F, one after the other.

INPUT. To get information into the program from the keyboard, use the INPUT statement. Use PRINT to tell the operator what to type in.

```
100 PRINT "ENTER
   VOLTAGE"
120 INPUT E
130 PRINT "ENTER
   RESISTANCE"
140 INPUT R
```

There are some very useful functions in BASIC. However, some of the smaller machines may not have all the possible functions: *RND* to get a random number; *INT* to get the whole-number value of a number; *SIN* to get the sine of a number; *COS* to get the cosine of a number; *TAN* to get the tangent value of a number; *ATN* to get the arc tangent; *LOG* to get the logarithm of a number; *ABS* to get the absolute value of a number. For example, 100 PRINT COS(R) prints the cosine of whatever R is.

BASIC is not only *the* language for the home system, but it is also definitely *the* language for the computer-controlled ham station. In a short time you should be able to develop programs which will keep track of all contacts made to and from your station (date, band, power, rig, etc.), handle mailing lists for your club, compute great circle bearings, convert to and from metric, and on and on . . . the list of applications is limited only by your imagination. Define a problem, and then sit down and write a BASIC program to solve it. Happy computing, and 73s! ■

73 Magazine *Staff*

Is It the Band or My Receiver?

-- the microvolter will tell!

Probably one of the most frustrating aspects of amateur operation for the amateur who does not use his station daily for several hours is to know when his station is functioning properly. That a transmitter is functioning properly can be verified by an in-line wattmeter for power and with a monitor receiver for modulation, at least to see that the rig is basically functioning. An swr check is a good basic check for an antenna system. But, what about the station receiver? An operator who uses his equipment frequently can pretty well judge band conditions on HF and knows that a band is "out." But, the infrequent or weekend operator often checks a band and finds signal levels low and then starts to wonder if it is the band or the receiver. Obviously, various checks can be made to see what the real situation is like. If the receiver can tune outside the amateur bands, stations like WWV or selected shortwave broadcast stations can be used as a quick reference to conditions. If a second receiver of equal quality is available, it can be used for verification of the main receiver's condition. But, many amateurs' entire stations consist of a transceiver confined to tuning only the amateur bands.

In this case, some other means of checking receiver performance is necessary. A signal generator providing a calibrated output down to the microvolt level would be ideal, but few amateurs have such test equipment.

This article presents a different approach in terms of the "microvolter." Basically, it is a simple gadget – just an oscillator and a carefully made attenuator network to generate a signal of approximately one microvolt. It is compact, battery powered and uses a single transistor. But, it can almost instantly remove all doubt and confusion as to whether a receiver is "out" or the band is "out." It was intended to be used by plugging it into the receiver's antenna terminals to make a check. However, it could be placed remotely and connected to its own antenna to see if an entire receiving system were functioning on any given band. Admittedly, there are pitfalls to this latter approach, since when a signal source is close to an antenna system, good signal pickup may occur even though something has happened to the antenna system to change its directional properties.

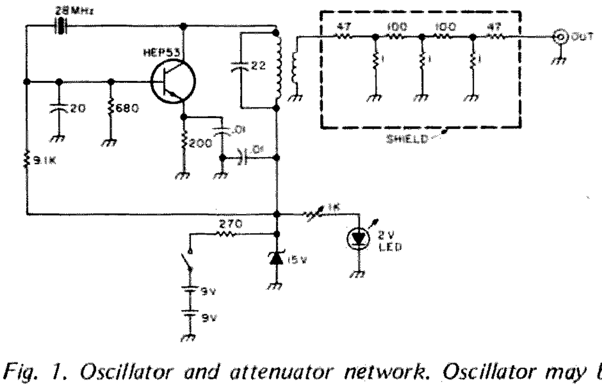

Fig. 1. Oscillator and attenuator network. Oscillator may be used on any band down to 6 meters by proper choice of LC circuit components. Coil: CTC LS5 form, 15 turns #22 enam., with 2 turn link.

The oscillator circuits presented here are mainly for the 20 through 2 meter bands since activity is usually great enough on the lower frequency bands that it is readily obvious if a receiver is functioning. However, if desired, the gadget may be designed to work on any amateur band.

As was mentioned, the microvolter consists of an oscillator and an attenuator network. Many circuits are possible which will work. However, the oscillator must be stable as regards battery voltage, and construction of the attenuator network, while not critical, must be carefully

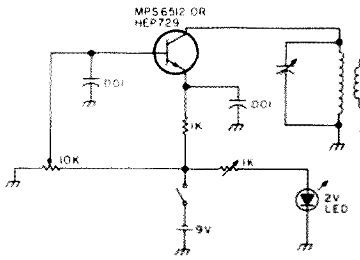

Fig. 2. Extremely simple VFO will work down to 2 meters by choice of proper tank circuit to resonate in desired band.

done to avoid leakage signal paths.

Fig. 1 shows a typical oscillator circuit which can be used and, by proper adjustment of the components, will work from 20 to 6 meters. It is crystal-controlled for simplicity, and the typical component values for 10 meters are shown. Note that the crystal does not have to have any particular frequency, as long as it falls within the band of interest, so advantage can be taken of the various surplus or odd-frequency crystals available at low prices from such outlets as JAN crystals. The output is about ½ volt across 50 Ohms, although this will depend on crystal activity and circuit tuning. The resistor attenuator network shown will bring the output down to about 1 microvolt across 50 Ohms. The output of the oscillator has to be verified in some manner. The best is, of course, to measure it directly if good instrumentation is available. An alternative is to construct the generator and see what response the entire unit provides on a receiver that is known to be in good shape. After all, the main purpose of the instrument is to provide a quick, relative indication that a receiver has not lost sensitivity. If it can be accurately calibrated as to output it could be used to make direct sensitivity measurements on a receiver in conjunction with a VOM to check audio level changes, in dB, with and without the test signal being applied. A simple LED circuit is included both to indicate that the generator is on and to approximately indicate a low battery voltage condition. The pot in series with the LED is adjusted so the lens of the LED is just barely fully illuminated. The difference between this point and no noticeable illumination of the LED is .15 to .2 volts for a typical LED. So, it can serve as a battery voltage indicator better than even a cheap meter.

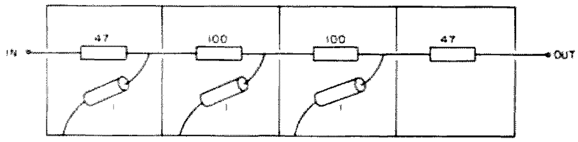

Fig. 3. Attenuator must be separately shielded. The output connector should be mounted on the attenuator shield.

Other crystal oscillator circuits can be used. K1CLL in the August 72 issue of *73* describes in detail a very good oscillator which, among other things, features a simple variable output level scheme by means by varying the emitter bias. For those who do not prefer to make their own oscillator, the International Crystal OX oscillator kits are very suitable. They cost only $3 with a tuned output circuit. The Lo kit takes crystals from 3 to 20 MHz and the Hi kit covers 20 to 60 MHz.

Simple VFOs can be used as the oscillator element but here, of course, the problem is that their output will vary with frequency. Nonetheless, if their output variations can be measured, there is no reason not to use them. For the purpose at hand, ultra frequency stability is not needed, so very simple circuits can be used. Fig. 2, for instance, is about as simple a VFO circuit as can be desired. The frequency of oscillation is determined by the single LC combination. By choosing combinations which resonate in the various amateur bands, the circuit will work down to at least 2 meters. Leads should be kept short and the oscillator enclosed in a metal enclosure to avoid hand capacity effects.

The attenuator network was shown in Fig. 1. Its construction is not critical, but it must be separately shielded even if the oscillator is enclosed in a metal enclosure. The easiest way to do this is by constructing it within a divided enclosure as shown in Fig. 3. The enclosure can be of brass sheet, available at many hobby shops, or of copper sheet, or even of sheeting salvaged from old tin cans. The only objective is to completely "button up" the attenuator network so signal leakage does not occur around it to the output jack of the oscillator.

The unit described has been kept as simple as possible. There are various ways to embellish it, if desired. For instance, three output attenuator networks with different attenuation characteristics might be built: one as a microvolt output, one as an S9 output (usually taken as 30 microvolts), and one as a 40 dB over S9 output. ■

Social Events

EL PASO TX
SEPT 4-5

The ARRL Hamfest will be held September 4-5 at the elegant Vista Motor Inn. Seminars, solar power, exotic modes, OSCAR and flea-market. Write PO Box 24050, El Paso TX 79914. Visit us on Labor Day weekend!

YORK PA
SEPT 5

The 21st Annual York County Hamfest will be held September 5th, rain or shine, 10 miles west of York PA; ½ mile west of York Airport, turn south off Rt 30 to Elickers Grove. Registration begins at 9 am – fee $3.00. All adults and amateurs are expected to register, XYLs and children free. A limited number of flea market tables are available inside by advance reservations *only*. Contact hamfest committee. There will be a $5.00 charge for using electric power. Talk-in 146.04-64; 28-88; 52-52. For more information write or phone Leroy Frey K3POR, 170 S. Albemarle St., York PA 17402, phone 854-1203.

DANVILLE IL
SEPT 5

The Danville Hamfest will be held at Douglas Park, Danville, Illinois September 5. Downstate Illinois' largest. Great prizes. Advance tickets $1.75 ea., 3/$5 with an SASE to Jim Wilson, 308 First, Ridgefarm IL 61870. Talk-in 22/82 and 3910.

BOSTON MA
SEPT 10-12

This year's big New England ARRL Convention has moved back to Boston and will be held September 10, 11 and 12 at the Statler Hilton Hotel. Featuring a bicentennial theme, the convention will cater to the whole ham family, with many committee wives in authentic period costumes helping direct the dozens of special bicentennial events featured in Boston for 1976. The city is extending the welcome mat with special features and exhibits that can only be seen during 1976.

Friday's activities are informal and will enable the ham to relax and "do his or her own thing." They include an FM hospitality suite and a square dance. Saturday and Sunday are crammed with activities from dawn to dusk. FCC exams for General, Advanced and Extra will be given Saturday – by appointment *only*. Application must be made three weeks in advance on FCC form 610 (available from the Boston office of the FCC), accompanied by a check made payable to the FCC for $4. Both check and form 610 must then be sent to Exam Chairman Michael Goldberg K1LJN, 40 Isabella St., Melrose MA 02176 – *not to the FCC*. Applicants will be notified by mail of their exam time.

The New England convention this year will have an emphasis on computer technology and how it affects ham radio. There will be a formal computer seminar on Friday and Saturday, a running computer display by DEC, and forums on computer technology. The FCC will have a booth at the show, along with leading manufacturers and distributors of ham gear. A banquet, show and dinner dance will feature the presentation of the Ham of the Year award on Saturday night.

Special YL activities include a bicentennial fashion show featuring period costumes, a hospitality suite,

and a bus tour of historic Boston (OMs welcome too!). A duplicate bridge tournament will also be a new feature this year.

The extensive speakers' program will feature top personalities, antenna experts such as Walter Maxwell W2DU of RCA, Jerry Sevick W2FMI of Bell Labs, inventor of the strobe light, Harold Edgerton of MIT with Loch Ness monster(!) films, SSTV and computer designer Robert Suding WØLMD, plus special guest speakers on 2 meter FM, DX, SSTV, MARS, an FCC forum, and of course the ARRL forum. There will be talks on solid state, a special program by Fr. Daniel Linehan W1HWK director of the Weston Observatory, net meetings, etc.

One of the most popular events is the flea market – this year it will be indoors, so weather will not dampen the spirits or the equipment!

Early birds can register for $3 (required of all OMs 12 and over); at the door it's $4. Banquet tickets including show and dancing are $12. Send check made payable to F.E.M.A.R.A. and SASE to ticket chairman George Stewart W1ZQQ, 17 Barnes Avenue, East Boston MA 02128, before September 1st.

BEREA OH
SEPT 11

The '76 Cleveland Hamfest presented by the Cleveland Hamfest Association will be held Saturday, September 11 at 8 am to 6 pm at the Cuyahoga County Fairgrounds, Berea, Ohio. Eastland Road entrance only to County Fairgrounds with easy access from Hopkins Airport, Interstate I-71, I-90 or Ohio Turnpike. Tickets $1.50 before August 31; $2.00 at 0800 for all 12 or over when gates open. Asphalt quad flea market parking $1 additional per space at 0700. Bring your own tables and shade. Registration: $1.50 tickets by mail before August 31 with check or money order to: Cleveland Hamfest Association, P.O. Box 43413, Cleveland, Ohio 44143.

MENA AR
SEPT 11-12

The Queen Wilhelmina Hamfest 1976 is Saturday and Sunday, September 11 and 12, at Queen Wilhelmina State Park, Rich Mountain, Mena, Arkansas. Excellent accommodations and food at the newly restored historic Queen Wilhelmina Castle. Door prizes hourly, grand prize, new equipment displays, flea market, camping area with utilities and rest rooms, amusements for harmonics. Talk-in 146.52. For more information write WB5CXX, P.O. Box 5191, Texarkana TX or phone (214) 838-0625.

MELBOURNE FL
SEPT 11-12

The 11th annual Melbourne, Florida hamfest will be held Saturday and Sunday, September 11-12, 1976, from 9 am to 5 pm each day in the air conditioned Melbourne Civic Auditorium located on Hibiscus Boulevard. Donation is $2.50 per adult. Full program includes forums, meetings, auction, swap tables, commercial exhibits, awards, prizes, etc. Talk-in on 25/85 and 52/52. Sponsored by Platinum Coast Amateur Radio Society. For more info write PO Box 1004, Melbourne FL 32901. FCC exams in Ramada Inn Saturday at 8 am for General, Advanced, and Extra. Form 610 and $4 fee must be filed with FCC, Room 919, 51 S.W. First Avenue, Miami, no later than August 31, 1976.

WICHITA KS
SEPT 12

The Wichita Amateur Radio Club Hamfest will be held on September 12, 1976. Registration begins at 8 am at Edgemoore Park (9th & Edgemoore), Wichita KS. Flea market, door prizes, food and beverages on site. Speaker from ARRL Board of Directors. Practice hamfest on evening of Sept 11 at Heritage House in Wichita. Talk-in on 34/94 and 3920 MHz.

Contact KØCFM for further information.

MALAGA NJ
SEPT 12

The South Jersey Radio Assn. 28th Annual Hamfest will be held September 12, 1976, 10 to 5 pm, at Molia Farms, Malaga, New Jersey. Lake, picnic grounds and food available. Tailgate sales, swap shop and door prices. Family tickets: advance sales – $2.50, gate sales – $3.50. Advance sales send SASE to Jack Koch, Box 103, Cherry Hill NJ 08002. Talk-in 146.52.

FINDLAY OH
SEPT 12

The 34th Annual Findlay Hamfest will be held on Sept. 12 at Riverside Park, Findlay, Ohio. Talk-in 146.52. For advanced tickets and/or info write: Clark Foltz W8UN, 122 W. Hobart St., Findlay, Ohio 45840. Please send SASE with request for fewer than 5 tickets.

HAMBURG NY
SEPT 18

The Hamburg International Hamfest will be held September 18, 1976 at the Erie County Fairgrounds in Hamburg, New York. Directions: Take the New York State Thruway to the Blasdell Exit (Exit 56). Recreational vehicles will turn right on Mile Strip Road and turn left on Route 62 South (first major intersection). Follow the signs to the Erie County Fairgrounds entrance. All other vehicles turn left on Mile Strip Road and turn right on McKinley Parkway (first major intersection). Hamfest will include giant flea market, technical forums, picnic facilities, excellent programs, non-amateur displays, code contest, women's programs, organization meetings, equipment displays and FM hospitality room, and thousands of dollars in awards. Admission: $3 at gate, $2.50 in advance. $1 for flea market parking. Children under 12 admitted free. Talk-in stations will be on the WR2ABU repeater (146.31 in, 146.91 out), 146.52 simplex, 7.255 (ECARS), and 3.925. For more information contact Bert Jones W2CUU, 143 Orchard Drive, Kenmore NY 14223, tel. 716-873-3984.

CHICAGO IL
SEPT 18-19

Radio Expo '76 will be held Saturday, Sept. 18 and Sunday, Sept. 19th at the Lake County, Illinois, Fairgrounds, Routes 45 and 120 north of Chicago. Featured this year are an exhibit hall with dozens of displays by amateur manufacturers and distributors, forums with the FCC's John Johnston, *73*'s Wayne Green, ARRL, OSCAR and more. There's a giant flea market with both indoor and outdoor space, plus plenty of room for campers and trailers on the grounds. No waiting in line – the flea market opens Friday night for set-up. No extra charge, either. Talk-in on WR9ABY, 146.16/76, Chicago. Accommodations reserved at the Holiday Inn in Mundeline, Ill., a few minutes south of the fairgrounds. Mention Radio Expo. Advance tickets, $1.50 from Box 1014, Arlington Heights, Ill. 60006.

MADISON WI
SEPT 19

The 4th Annual Madison Swapfest sponsored by Madison Area Repeater Association will be held at Dane Co. Expo Center Youth Building, rain or shine, Sunday, September 19. Doors open at 8 am. All-you-can-eat pancake breakfast, free old-time movies all day long, and lots of prizes. Advance tickets & tables $1.50 – $2.00 at door (XYLs and kids free). Overnite trailer and camper accommodations available at swapfest site. Directions: next door to Dane Co. Coliseum. Just follow "Coliseum" Highway signs to Dane Co. Expo Center, approximately 6 miles west of I-90 and 12 and 18 interchange to "MC" exit. Then turn right on "MC." Coliseum and Sheraton Inn clearly visible ½ mile north of 12 & 18 & "MC" exit. Talk-in on 94. For advanced reservations: M.A.R.A., Box 3403, Madison WI 53704.

HARRISBURG PA
SEPT 19

Hamfest sponsored by the Central

Pennsylvania Repeater Association will be held on Sunday, September 19, 1976 at the Park-N-Shop Parking Garage, 200 Block Walnut Street, Harrisburg PA. Gates will open at 9 am. Registration: $3 per ham, XYLs free — no charge for tailgating. Food available. Note: no vehicle over 7 feet high will fit into the garage. Talk-in 146.16/.76 WR3ABV .94/.94. For more information contact W3ABF or WA3AVX.

MOUNT CLEMENS MI
SEPT 19

The Fourth Annual L'Anse Creuse ARC Swap & Shop will be held on September 19, 1976 at the L'Anse Creuse High School in Mount Clemens, Michigan. Doors will be open from 0900 to 1500 EDST. First prize $200 cash. Talk-in on 146.52 and 146.94. Admission $1.50 at door, $1 in advance. For tickets enclose $1 and SASE and send to Robert Harder WB8ILI, 51769 Base, New Baltimore MI 48047.

NEW KENSINGTON PA
SEPT 19

The Skyview Radio Society's Swap & Shop will be held on Sept. 19, 1976 at the Skyview Radio Club, New Kensington PA. Registration $1. Talk-in 52-52 and 04-64.

McLEAN VA
SEPT 25-26

The National Capitol DX Association (NCDXA) and the Amateur Radio Research and Development Corporation (AMRAD) are teaming together to provide a DXciting weekend — DXPO 76. The 1976 ARRL DX Technical Symposium will present a comprehensive technical session geared to the DXer. Contact Paul Rinaldo K4YKB, 1524 Springvale Avenue, McLean, Virginia 22101 for details. It will be held at the newly constructed Ramada Inn at Tysons Corner near McLean, Virginia. Easy access from Interstate 495 (Capitol Beltway).

NEW BERLIN IL
SEPT 26

The Sangamon Valley Radio Club Hamfest will be held September 26 at the Sangamon County Fairgrounds, New Berlin, Illinois, twelve miles west of Springfield (Illinois state capital) on Route 36. There will be food, programs, covered pavilion, and nearby camping. See Lincoln shrines. Talk-in 28/88 AF9AFA. Tickets $1.00. Write: K9HDZ, 622 Magnolia, Rochester, Illinois.

LEXINGTON KY
OCT 3

The Central Kentucky Hamfest will be held on October 3, 1976 at the Countryworld Convention Center on I-75 between Lexington and Georgetown, Kentucky. Prices will be given away, including a special Novice grand prize. There will also be an indoor flea market. Talk-in on 146.16-76. Admission: $2.50 advance; $3.00 at the door; includes grand prize stub. Doors open at 8 am. For more information and advance tickets write: Hamfest, Box 4411, Lexington KY 40504.

ERIE PA
OCT 9

The Radio Association of Erie has just approved the date for its fall Hamfest and Flea Market on Saturday, October 9, 1976. This year's event will be held at the Kuhl Hose Company Grounds on Pennsylvania Route 8, 1½ miles south of I-90. Admission is free with a $1.00 per car charge for the flea market. The time will be from 10 am to 4 pm with a dinner to follow at 6 pm. For more information contact RAE, Box 844, Erie PA 16512.

SYRACUSE NY
OCT 9

The Radio Amateurs of Greater Syracuse will hold their annual Hamfest on Saturday, October 9, 1976 from 9 am to 6 pm at the Syracuse Auto Auction building on Route 11, 4 miles south of Syracuse. Tickets are $1.50 if purchased before October 1st

and $2.00 thereafter. Food will be available, as well as a breakfast menu for early comers. The Lafayette Apple Festival is being held the same day and there will be buses to it leaving from the hamfest gate. The program will feature Dave Sumner of the ARRL, Frank WB2MFF, on "Microprocessors and Amateur Radio," a UNYREPCO panel, and a Navy MARS meeting. For tickets or further information, write R.A.G.S., Box 88, Liverpool, New York 13088.

VIENNA VA
OCT 24

The AMRAD COMPUTERFEST will be an exposition of microcomputers for computer amateurs, radio amateurs and the general public. It is being sponsored by the Amateur Radio Research and Development Corporation (AMRAD), a non-profit scientific and educational organization.

The AMRAD COMPUTERFEST will be held on October 24, 1976 at the Vienna Community Center, 120 Cherry St., Vienna, Virginia, near Exit 11S of the Washington, DC Beltway.

The exposition will be almost entirely devoted to small computers of the type suitable for home use. There will be displays of microcomputer systems by various manufacturers' representatives as well as tables for used or surplus equipment, circuit boards and parts. Peripheral devices including video terminals, teletypewriters and RTTY equipment will be shown. Forums will run throughout the day on subjects of interest to the serious hobbyist, students, and the general public. There will also be an opportunity to talk to representatives of various computer clubs and magazines.

Admission will be $4.00 at the door ($3.50 advance registration by mail for pickup at the door). Make checks payable to AMRAD. Write: COMPUTERFEST, P.O. Box 682, McLean VA 22101.

For reservations, contact any of these nearby motels directly: Vienna Wolf Trap Motel, 430 Maple Ave E, Vienna VA 22180, (703) 281-2330; Tysons Corner Holiday Inn, 1960 Chain Bridge Rd, McLean VA 22101, (703) 893-2100; or Tysons Corner Ramada Inn, 7801 Leesburg Pike, Falls Church VA 22043, (703) 893-1340.

PLYMOUTH IN
OCT 31

The Marshall County Amateur Radio Club Swap-n-Shop will be held on Sunday, October 31, 1976, at the Plymouth, Indiana National Guard Armory located at 1220 W. Madison Street from 7 am to 4 pm. Free tables, no charge for set-up. Tickets $2 at door. Food, drink and door prizes. Talk-in on 146.07-67 and 146.94 simplex. For further information contact WA9INM, Route 3, Box 526, Plymouth, Indiana 46563.

Tracking the Hamburglar

RUSTLED: TR22-C s/n 120816. Contact Glenn Packard K3ZOT, 836 Mason Avenue, Drexel Hill PA 19026.

TAKEN: Icom IC22A s/n 3402547. Contact Steve Bauer, PO Box 162, Goleta CA 93017.

HIJACKED: Drake TR-72 2 meter FM and locked bracket s/n 750228. Stolen from car in Arvada, Colorado on June 18, 1976. Contact Ron Bradley WBØOES, Arvada, Colorado, 303-421-3549.

ROBBED: Regency HR2 s/n 04-04279, ssn 313-40-1690 on inside frame. $50 reward. Contact Bob Walker W4LPU, 4713 N.W. 3rd Ct., Plantation FL 33317, 305-792-7015.

WHAT HAVE YOU MISSED?

The back issues of 73 are a gold mine of interesting articles . . . just take a look at what's been covered . . . every possible interest. This is the most important library you can have for hamming.

The supply of these back issues is very limited . . . and when these are gone, that will be it. Don't miss out by procrastinating.

Single issues .... $1 each (before 1976)
Ten back issues (your choice) ..... $12 postpaid in US.
Twenty-five back issues (your choice) $20 postpaid in US.
Twenty-five back issues (our choice) $10 postpaid in US.

JUNE 63. Surplus Issue: DMQ-2 Beacon Tx on 220, increasing ARC-2 transceiver selectivity, PE-97A pwr supply conversion, BC-348 band spread, inductance tester, converting BC-230 tx, beginner's rx using BC-453, recvr motor tuning, transistor cw monitor, BC-442 ant relay conversion, mobile loading coils, increasing Two-er selectivity, TV with the ART-26 tx, TRC-8 rx on 220, ARC-5 hf rx & tx, ARC-3 tx on 2M.

AUG 63. Battery-op 6M stn, diode noise gen, video modulation, magic T-R switch, ant gain, halo mods, cw breakin, VEE beam design, coax losses, RF wattmeter, TX Tube Guide, diode pwr supply, "Lunchbox" squelch, SWR explanation, vertical ant info, info on Windom ant.

OCT 63. WBFM transceiver ideas, HF propagation, cheap fone patch, remote-tuned Yagi, construction hints, ant coupler, S5 Vertical, filament xformer construction, 2M nuvistor converter, Lafayette HE-35 mods, Buyer's Guide to Rx & Tx, product detector, novel Hi-C VFO, radio astronomy, panadaptor "if" converter, compact mike amp.

FEB 64. 2M multichannel exciter, rx design ideas, majic t/r switch, loudspeaker enclosures, 40M 2W tx, look at test equipment, radio grounds, 40M ZL Special ant, neutralization.

MAY 67. Quad Issue: 432 Quad-quad-quad, expanded HF quad, Two el quad, miniquad, 40M quad, quad experiments, half-quad, three el quad, 20M quad, tiltover quad, easy-to-erect quad, Quad Bibliography, FET vfo, tube troubleshooting, HF dummy load, under standing "dB," HF SSB/cw rx, geometric circuit design, GSB-201 transceive, FET converter for 10-20M, hi-pass rx filters.

JULY 67. VE ham radio, VE0 hams, dsb adaptor, home brew tower, transistor design, '39 World's Fair, gnd plane ant, G4ZU beam, SSTV monitor, UHF FET preamps, IC "it" strip, vertical ant, VHF/UHF dipper, tower hints, scope monitoring, operating desk, S-Line crossband, hi-school ham club, Heath HR 10 mods.

OCT 67. HF solid state rx, rugged rotator, designing slug-tuned coils, FET converter, SSTV pix gen, VHF log-periodics, rotatable dipole, gamma-match cap, old-time dxing, modern dxing.

JUNE 68. Surplus Issue: Transformer tricks, BC-1206 rx, APS-13 ATV tx, low voltage dc supply, surplus scopes, FM rig commercial xtal types, Wilcox F-3 rx, restoring old equipment, 75A1 rx mods, TRA-19 on 432, freq counter uses, transceiver pwr supply, uses for cheap tape recorders, Surplus Conversion Bibliography, RT-209 walkie on 2M, ARC-1 guard rx, RTTY tx TU.

JULY 68. Wooden tower construction, tiltover towers, erecting a telephone pole, IC AF osc, "dB" explained, ham club tips (Part 1).

SEPT 68. Mobile vhf, 432 FET preamps, converting TV Tuners, xtal osc stability, parallel-Tee design, moonbounce rhombic, 6M xciter (corrections Jan 69), 6M transceiver (corrections Jan 69), 2M dsb amp, ham club tips (Part 3).

NOV 68. SSB xtal filters, solid state trouble shooting, IC freq counter (many errors & omissions), "cv" transformers, space comm odyssey, pulsar info, thin-wire ants, 40M transistor cw tx/rx, BC-348M double conversion, multifunction tester, copper wire specs, thermistor applications, hi-voltage transistor list, ham club tips (Part 5).

JAN 69. Suppressor compressor, HW-12 on 160, beam tuning, AC voltage control, 2M transistor tx, LC power reducer, spectrum analysis info, 6M transistor rx, operating console, RTTY autostart, calculating osc stability, lo-pwr 40 cw tx, sequential relay switching, sightless operator's bridge, ham club tips (Part 7).

FEB 69. SSTV camera mod for fast-scan, tri-band linear, selective af filter, unijunction transistor info, Nikola Tesla biography, mobile installation hints, extra class license study (Part 1).

MAR 69. Surplus issue: TCS tx mods, cheap compressor/amp, RXZ calculations, transistor keyer, better balanced modulator, transistor oscillators, using blowers, halfwave feedline info, Surplus Conversion Bibliography, extra license study (Part 2).

APR 69. 2-channel scope amp, rx preamp, Two-er PTT, variable DC load, SWR bridge, 100 kHz marker gene, some transistor specs, SB-610 monitorscope mods, portable 6M AM tx, 2M converter, extra license study (Part 3).

MAY 69. 2M Turnstile, 2M Slot, rx attenuator, generator filter, short VEE, quad tuning, using antennascope, measuring ant gain, phone patch regs, SWR indicator, 160M short verticals, 15M antenna, HF propagation angles, FSK exciter, KW dummy load, hi-power linear, extra license study (part 4), all-band curtain array.

JUNE 69. Microwave pwr generation, 6M ssb tx, 432-er tx/rx, 6M converter, 2M 5/8 wave whip, UHF tv tuners, ATV video modulator, UHF FET preamps, RTTY monitorscope, extra license study (part 5), building uhf cavities, mini VEE for 10-20M, vhf vfo.

JULY 69. AM modulator, SSTV sig gen, 6M kw linear, 432 KW amp, 432-er tx/rx, 6M IC converter, radio-controlled models, RTTY IC TU, audio notch filter, VRC-19 conversion, tube substitution, 2M transistor xcitor, extra license study (part 6), hf FET vfo.

AUG 69. FET regen for 3.5 MHz up, FM crystal switching, 5/8 wave vertical, introduction to ICs, RTTY tone gen, good/bad transistor checker, 2M AM tx, measure transistor Ft, 160M propagation, triac applications, simple IF sweep gen, transistor keyer, SB-100 on 6M, xtal freq measurement, extra license study (part 7), FM deviation meter, qrp am 6M tx, circular quads, FM noise figure, transistor parameter tracer.

SEPT 69. Tunnel diode theory, majic tee, soldering techniques, wave travel theory, cable shielding, transistor theory, AM noise limiter, AFSK gen, transistor amp debugging, measure meter resistance, diode-stack pwr supply, transistor testing, 2½W 6M tx, HX-10 neutralizing, capacitor useage, radio propagation, AM mod percentage, extra class license study (part 8), 3-400Z linear, ATV vidicon camera, 2 transistor testers, FET compressor, rf plate choke.

OCT 69. Super gain 40M ant, FET chirper, telephone info, scope calibrator, thyrector surge protector, slower tuning rates, identify calibrator harmonics, FM adaptor for AM tx, CB sets on 6M, proportional control xtal oven, xtal filter installation, Q-multiplier, transceiver pwr supply, extra class study (part 9).

NOV 69. NCX-3 on 6M, IF notch filters, dial calibration, HW32A external VFO, 6M converter, feedline info, rf z-bridge, fm mobile hints, umbrella ant, 432-er tx (part 1), pwr supply tricks with diodes, transistor keyer, transistor bias design, xtal vhf sign gen, electronic variac, SB33 mods, extra class study (part 10), SB34 linear improvements.

DEC 69. Transistor-diode checker, dummy load/attenuator, tuned filter chokes, band switching Swan 250 & TV-2, 88mh selectivity, match exercizes, rtl xtal calibrator, transistor pa design, hv mobile p.s., 1-10 gHz freqmeter, CB rig on 6M, extra license study (part 11), 1970 buyer's guide.

JAN 70. Transceiver accessory unit, bench power supply, SSTV color method, base-tuned center-loaded ant, 6M bandpass filter, extra license study (part 12, rectifier diode useage, facsimile info.

FEB 70. 18-inch 15M dipole, 6M converter, high-density pc board, camper mobile hints, 2M freq synthesizer, encoding/decoding for repeaters, DX-35 mods, panoramic vhf rx, variable-Z HF mobile mount, extra license study (part 13), linear IC info, qrp 40M tx, IC Q-multiplier.

MAR 70. Gdo applications, charger for drycells, FM freq meter, pc board construction, ham fm standards, cheap rf wattmeter, multifreq fm osc, "IF" system modules (part 1), Six-er mods, gdo dip lite, Motorola 41V conversion, cw monitor, buying surplus logic, SSO-23A sonobuoy conversion, GRC-9 rx/tx conversion, extra class study (part 14), intro to vhf fm.

APR 70. Noise blanker, 2M hotcarrier diode converter, repeater controller, understanding COR repeater, 7/8-wave 2M ant, extra class study (part 15), inexpensive semiconductors, removating surplus meters, linear amp bias regulator, hi performance if amp & agc system, SSB bfo for shortwave radio, vacuum tube load box, general fm dope & repeater guide, megger-ing your ant.

MAY 70. Comments on "fm docket" #18803, future of cw, fm-am rx aligner, 5/8-wave verticals, using 2M intelligently, auto burglar alarms, pwr supplies from surplus components, "IF" system modules (part 2), vhf FET pre amps, educated "idiot" lites, postage-stamp 6M tx, extra class study (part 16), Bishop (FNL, low-band police monitor, mobile cw tx, Wichita auto patch.

JUNE 70. DDRR ant, vfo circuit, remote SWR indicator, indoor hf vertical, two rx on one antenna, environment & coax loss, 2-el trap verticals, buying surplus, two 40M qrp tx, 21dB 2M beam, extra class study (part 17).

DEC 70. Solid-state vhf exciter, delta-tre control for SSB, 2M transistor FM tx, HW100 offset tuning, "little gate" dipper, 3-500Z hf linear, general class study (part 5), "transi-test" (no good – errors!), transistor p.s. current limiter.

JAN 71. Split fones for dxing, Heath Ten-er mods, cw duty cycle, repeater zero beater, HEP IC projects, 10-15-20M parabolic ideas, lightning protection, IC rx accessory, attic ants, double-balanced mixers, permanent marker tool, ham license study questions.

FEB 71. Metal locator, varactor theory, AFSK unit, SSTV patch box, ATV hints, RTTY tuning indicator, tone encoder/decoder, 220 MHz converter, SSTV magnetic deflection, IC code osc, 6M tx beeper, general class study (part 6), RTTY intro, perf-board terminal, low-ohmmeter.

MAR 71. IC audio filter, IC 6M converter, trap vertical ideas, digi counter info, surplus equip ment identification, hf linear, simple fone patch, repeater audio mixer, digi RTTY accessories, coathanger gndplane, general class study (part 7).

APR 71. Intro to fm, noise blanker, repeater problems, Motorola HT mods, microwave repeater linking, digital ID unit, tuneable 2M fm rx/tx, repeater directory, fm marketplace, meter evaluator, varactor modulator, simple sig gen, touchtone hookup, hf preselector, 10M 12W tx.

MAY 71. 75M mobile whip, 2M preamp, transistor amp design, 10M dsb tx, portable fm transceiver directory, audio compressor-clipper, transistor LM freqmeter, 450 MHz link tx, simple af filter, 1-tube 2M transceiver, surplus 2M power amp, general class study (part 8).

JUNE 71. 2M beam experiments, 3 el 2M quad, multi-band dipole patterns, weather balloon vertical, pocket-pager squelch, two-er vfo, tuning mobile whips, transistor pwr supply, capacity decade box, 40M gain ant, general class study (part 9).

JULY 71. IC audio processor, audio sig gen, cw filter, 2M fm osc, 2M collinear vertical, FM supplier directory, Motorola G-strip conversion, transistor beta tester, general class study (part 10).

AUG 71. Ham facsimile (part 1), 500 Watt linear, dimensions for July collinear, 4-tube 80/40 station, vfo digi readout, Jupiter on 15M, general class study (part 11), pink ticket wave meter.

SEPT 71. Transformerless power supplies, solid state tv camera, IC substitution, two rf wattmeters, IC compressor-agc, multichannel HT-200, ham facsimile (part 2), causes of manmade noise, vfo with tracking mixer, general class study (part 12), transistor heat sinking, IC pulse gen, fone patch isolation, hcd wattmeters.

OCT 71. Emergency repeater cor, transceiver power supply, predicting meteor showers, digi switching, reverse-current battery charger, passive repeaters, earth grounds, audio "tailoring" filters, Swan 350 mods.

NOV 71. 3-el 75M beam, motor-tuned gnd plane, 2M gain vertical, transistor biasing, split-site repeater, fox-hunting, audio filter, transistor/diode tester, xtal tester, 6M kw amp, 10-15-20M quad, transistor pi-net final, ant feedline, communications dbs, 2300 MHz exciter.

AUG 72. SSTV intro, speech processor, fm repeater info, test probe construction, GE progline ac supply, 432 rf testing, preamp compressor, Six-er mods, fone patch, Two-er info, solar info, SCR regulator for HVPS, "ideal" xtal osc, fm rx adaptor, auto theft alarm.

SEPT 72. Plumbicon tv camera, WWVB 60 kHz rx, cigartube sig gen, cw active filter, rf testing at 1296-3500 GHz, balun ant feed, transistor power supply, IC 6M rx, IC fm/am detector (part 2), active filter design (part 3), K2OAW freq counter (part 3), 2M freq synthesizer (part 1).

OCT 72. Corrections for Aug. fm rx adaptor, 2M freq synthesizer (part 2), 6M transistor vfo, nano-ampere meter, time-freq measurement (part 1), active filter design (part 4), repeater timer, extra-class Q&A (part 3), balloon vertical, ID gen, time delay relay, 432 filter ideas, DC-AC inverter, hc diode converter, rtl decade and nixie driver, plus-minus supply for ICs.

NOV 72. Hf transistor power amps, RTTY selcal, IC trf rx, transistor keyer, emergency power, 220 MHz preamp, double-delta ant, simple converter using modules, hf RF tester, "lumped line" osc, 2M freq synthesizer (part 3), K2OAW counter errata, 2M preamp, extra class Q&A (part 4), hi-Z voltmeter, Nikola Tesla story, vhf swr meter, transistor regen rx, 432 SSB transverter, AC arc welder, intro to computers, hybrid am modulator, HR10 rx mods, 10M transistor am tx, 40M gndplane, IC logic demonstrator, overload protection, if/rf sweep generator, digi freq counter, aural tx tuning.

DEC 72. SSTV scope analyzer, 2M fm rx, tone burst encoder and decoder, universal if amp, autopatch hookup, LM380N info, voltage variable cap info, 2M 18 watt amp, SSB modulation monitor, xtal freq/activity meter, 10A var. dc supply, transmission line uses, radio astronomy, inductance meter, 75 to 20M transverter, LED info, 40M preamp, transistor vfo, 1972 index, 2M preamp.

JAN 73. HT-220 touchtone, 3-el 20M vagi, 50 MHz freq counter, speech processor, 2-tone gen, fm test set, tilt-over tower, 6M converter using modules, tuneable af filter, six band linear, 10M IF tuner, diode noise limiter, cw/ssb agc, HW22a transceiver 40M mod, HAL ID-1 mod.

FEB 73. CW id gen, tone operated relay, toroidal quadrature ant, active filter, time freq measurement (part 2), repeater timing control, SSTV circuits (part 1), 2M converter using modules, multifunction metering, FET biasing, freq counter preamp, TR22 hi-power mod, transistor rf power amps (part 1), light bulb rf power indicators, 75A4 filters, capacitance measurement, Gonset 201 mod, world time info.

APR 73. FM deviation meter, 2M FET preamp, two 2M power amps, repeater control (part 1), repeater licensing, European 2M fm, fm scanner adaptor, RCA CMU15 mods, lightning detector, cb alignment gadget, transistor rf power amps (part 2), repeater economics.

JUNE 73. 220 MHz sig gen, uhf power meter, repeater licensing info, RTTY autowitch, 40M hybrid vfo tx, ant polar mount, 10-15-20M quad, K2OAW counter mods, double coax ant, ham summer job, tone decoder, field strength meter, nicad battery pack, ohm meter, FCC regs (part 1).

AUG 73. Log periodics (part 1), tone burst gen, rf power amp design, transistor radio intercom, 160M ant, SSTV monitor, low cost freq counter, VOM design, qrp 40M tx, 432 MHz exciter, fm audio processing, FCC regs (part 3).

SEPT 73. Repeater control system, log periodics (part 2), 2M rx calibrator, PLL ic applications, TT pad hookup, Heath HW7 "s" meter, Oscar-6 doppler, 2M coaxial ant, 2M converter, IC keyer, measure ant Z, FCC regs (part 4).

OCT 73. GE Pocketmate mods, microwave freq measurement, CA3102E 2M frontend, 2 kw hf linear, rf wattmeter, meter repair, 60/40 dipole, IC "hi" gen, vhf freq multiplier, FCC regs (part 5).

NOV 73. 450 MHz exciter, intro to ATV circuits, nicad voltage monitor, autopatch connections, IC meter amplifier, TR22 ac supply, indoor vertical, IC af filter, momentary power failure protection, 160M ant acoupler, Motorola HT info, SSTV ISB, Class-B af amp, FCC regs (part 6).

DEC 73. Code speed display, 2M kw amp, IC keyer, 8038 waveform gen, helical resonator design, sencitive rf voltmeter, proximity control switch, IC tester, sequential tone decoder, 2M portable beam, electronic calculator math, cw filter design, FCC regs (part 7).

FEB 74. SSTV monitor info, IC audio amps, scope sweep gen, 15/20M vertical, telephone line control system, pc board construction, var-Q af filter, blown-fuse indicator, 40m cw stn with Ten-Tec modules, simple preamp-compressor, single IC rx, "432-er" final assembly, transistor keying circuit, 7 segment readout with nixie driver.

APR 74. Vox for repeaters, tone operated relay, hf transverter, 10-to-2m tx converter, remote control panel for scanner, RCA fm tx tuning, subaudible tone gen, FCC regs (part 9), Repeater Atlas.

MAY 74. Cd car ignition, audio compressor info, interference suppression for boats, auto burglar alarms, 2m ic preamp, 10m fet converter.

JULY 74. 4-1000A linear, universal freq gen, universal afsk gen, 555 IC timer, 80M phased array, 135 kHz-432 MHz preamps, 10M qrp am tx, 3000 vdc supply, how to read diagrams.

AUG 74. Toroidal directional wattmeters, 450 MHz FET preamp, use gdo to find "c", Trimline tt pad hookup, R390 & R392 rx mods, tracking cw filter, aural voltmeter, universal regulated supply, sstv scan converter, ttl logic problems, ID timer.

SEPT 74. MOSKEY electronic keyer (part 1), ex warning system, Heath 10-103 scope mods, qrp 6M am tx, rf speech clipper, audio noise limiter, wx satellite on SSTV monitor, universal IC tester, miniature rig construction, tower construction, infinite rf attenuator, electronic

(More)

Since there's little to get stale in back issues of 73 (our magazine is not padded . . . like others . . . with reams of activity reports), you'll have a fantastic time reading them. Most of the articles are still exciting to read . . . and old editorials are even more fun for most of the dire predictions by Green have now come to pass. Incentive licensing was every bit the debacle he predicted . . . and more. You'll really get a kick out of the back issues.

photo flash ideas, IC "select o ject."

OCT 74. Microtransistor circuits, synthesized HT 220 (part 1), repeater government, regulated 5 vdc supply, fm selcal, removeable mobile ants, Motorola metering, 2M vertical collinear, Motorola model code, 2M coaxial dipole, 1.6 MHz if strip, MOSKEY electronic keyer (part 2), carbon mike circuit hi power lo pass filter, 6M preamp, 3-wire dipole ATV sync gen, NCX 5 mods, mobile whip for apartment dwellers, sstv auto vertical trig

NOV 74. K2OAW counter update, regulated 5 vdc supply, wind direction indicator, synthesized HT-220 (part 2), 20M 3-el beam, auto patch pad hookups, double-stub ant match, novice class instruction, digi swr meter (part 1), 6M converter (1.6 MHz if), "C-bridge," MOSKEY electronic keyer (part 3), Aug. sstv scan converter errata, repeater off-freq indicator.

DEC 74. Care of nicads, wind speed/direction indicator, wx satellite video converter, electronic keyer, hints for novices, unknown meter scales, SSTV tape ideas. TTL logic probe, public service band converter, tuned-diode test receivers, digi swr meter (part 2), telephone pole beam support, rhombic antennas, 1974 Index

FEB 75. Heath HO-10 scope mod for SSTV, electronic keyer, digital satellite orbital timer, Oscar-7 operation, satellite orbital prediction, Heath SB-102 mods, comparing FM & AM, repeater engineering, Robot 80-A sstv camera mod, neutralizing Heath SB-110A, "Bounce-less" IC switch, tape keyer for cw tx.

APR 75. $50 walky for 2M, 2M scanning synthesizer, 88 mH toroid info, 8-function repeater controller, nicad battery precautions, TR22C preamp, telephone attachment regs, Guide to 2M Hand-held Transceivers, 2M 7-el beam, basic telephone systems (part 1) 10 min ID timer, modified hf Hustler mobile ant for 2M, 15M quad modified for 20M, 2M collinear beam, R 11A surplus rx conversion, 5/16 wave 2M ant, Hallicrafters SX 111 rx mods, 160M cw tx.

AUG 75. 146/432 MHz Helical ants (part 2), 10 min ID timer, digi swr computer (part 1), debugging rf feedback, DVM byer's guide, wx satellite monitor, cmos "accu keyer," pc board method, sweep-tube final precautions, compact multiband dipoles, small digital clock, accessory vfo for hf transceiver, modern non Morse codes, multi-function gen, 2M scanning synthesizer errata, KP-202 walky charger, 10M multi element beam.

SEPT 75. Calculating freq counter, wx satellite FAX system (part 1), IC millivoltmeter, three-button TT decoder, troubleshooting sstv pix, 40M dx ants, 146/432 MHz helical ants (conclusion), digi swr computer (conclusion), reed relay for cw bk in, NE555 preset timer, power failure alarm, portable qrp rig power unit, precision 10 vdc reference standard, 135 kHz if strip, telephone handsets with fm transceivers, Motorola T 44 tx mod for ATV, 0-60 MHz synthesizer (part 10, ham radio PR)

BACK ISSUES

73 MAGAZINE CLASSICS

issues containing hundreds of articles & projects

GREAT FOR NOSTALGIA BUFFS

SEND TO 73 BACK ISSUES – PETERBOROUGH, N.H. 03458 10-76

☐ JUNE 63
☐ AUG 63
☐ OCT 63
☐ FEB 64
☐ MAY 67
☐ JULY 67
☐ OCT 67
☐ JUNE 68
☐ JULY 68
☐ SEPT 68
☐ NOV 68
☐ JAN 69
☐ FEB 69
☐ MAR 69
☐ APR 69
☐ MAY 69
☐ JUNE 69
☐ JULY 69
☐ AUG 69
☐ SEPT 69
☐ OCT 69
☐ NOV 69
☐ DEC 69

☐ JAN 70
☐ FEB 70
☐ MAR 70
☐ APR 70
☐ MAY 70
☐ JUNE 70
☐ DEC 70
☐ JAN 71
☐ FEB 71
☐ MAR 71
☐ APR 71
☐ MAY 71
☐ JUNE 71
☐ JULY 71
☐ AUG 71
☐ SEPT 71
☐ OCT 71
☐ NOV 71
☐ AUG 72
☐ SEPT 72
☐ OCT 72
☐ NOV 72
☐ DEC 72

☐ JAN 73
☐ FEB 73
☐ APR 73
☐ JUNE 73
☐ AUG 73
☐ SEPT 73
☐ OCT 73
☐ NOV 73
☐ DEC 73
☐ FEB 74
☐ APR 74
☐ MAY 74
☐ JULY 74
☐ AUG 74
☐ SEPT 74
☐ OCT 74
☐ NOV 74
☐ DEC 74
☐ FEB 75
☐ APR 75
☐ AUG 75
☐ SEPT 75

☐ $1 – single issues (indicate your choice at left)
_______ issues @ $1
☐ $12 – ten issues (indicate your choice at left)
☐ $20 – 25 issues (indicate your choice at left)
☐ $10 – 25 issues, our choice ☐ 60-65 ☐ 66-70 ☐ 71-75
☐ Cash, check, money order enclosed.

Name ______________________ Call ______________

Address ______________________________________

City ______________________ State ________ Zip ________

Charge: ☐ BankAmericard # ______________________

☐ Master Charge # ______________________

Master Charge Interbank # ______________ Expiration date ________

Date ______________ Signature ______________________

PROPAGATION

by
J. H. Nelson

EASTERN UNITED STATES TO:

GMT:	00	02	04	06	08	10	12	14	16	18	20	22
ALASKA	7A	7	7	7	3	3	3	7	7	7A	14	14
ARGENTINA	14	7B	7B	7	7	7	14	14	14A	14A	21	14
AUSTRALIA	14	7B	7B	7B	7	7	7	14	14B	14B	14	14A
CANAL ZONE	14	7	7	7	7	7	14	14	14	21	21	14
ENGLAND	7	7	3	3	7	7	14	14	14	14	14B	7
HAWAII	14	7B	7B	7	7	7	7	7B	14	14	14A	14
INDIA	7	7B	7B	7B	7B	7B	14	14	7B	7B	7	7
JAPAN	14	7B	7B	7B	7	3	7	7	7	7B	7B	14
MEXICO	14	7	7	7	7	7	7	14	14	14	14A	14
PHILIPPINES	14B	7B	7B	7B	7B	7	7	7	7	7B	7B	7A
PUERTO RICO	7	7	7	7	3	3	7A	14	14	14	14	14
SOUTH AFRICA	7	7	7	7	7B	7A	14	14A	14A	14	14	14
U. S. S. R.	7	3	3	3	7	7B	14	14	14	14B	7B	7
WEST COAST	14	7	7	7	7	3	7	14	14	14	14	14A

CENTRAL UNITED STATES TO:

GMT:	00	02	04	06	08	10	12	14	16	18	20	22
ALASKA	14	7A	7	7	3	3	3	7	7	14	14	14
ARGENTINA	14	7B	7B	7	7	7	7B	14	14A	14A	21	14A
AUSTRALIA	14A	14	7B	7B	7	7	7	7	14B	14B	14	14A
CANAL ZONE	14	7	7	7	7	7	7	14	14	21	21	14
ENGLAND	7	7	3	3	3A	3B	7B	14	14	14	14B	7
HAWAII	14	14	7B	7	7	7	7	7	14	14	14A	14A
INDIA	7A	7A	7B	7B	7B	3B	3B	7A	7A	7	7B	7B
JAPAN	14	7B	7B	7B	3B	3	3	7	7	7B	7B	14
MEXICO	14	7	7	7	7	3	7	7A	14	14	14	14
PHILIPPINES	14	14B	7B	7B	3B	3B	3B	7	7	7	7B	14
PUERTO RICO	14	7	7	7	7	7	7A	14	14	14	14A	14
SOUTH AFRICA	7	7	7	7	7	7	7A	14	14	14A	14	14
U. S. S. R.	7	3	3	3	3B	3B	7	14	14	7B	7B	7B

WESTERN UNITED STATES TO:

GMT:	00	02	04	06	08	10	12	14	16	18	20	22
ALASKA	14	7A	7	7	3	3	3	7	7	14	14	14
ARGENTINA	14	14	7B	7B	7	7	7B	14	14	14	21	14A
AUSTRALIA	14A	21	14	7B	7	7	7	7	7	14B	14	14A
CANAL ZONE	14	7A	7	7	7	7	7	14	14	14	21	21
ENGLAND	7B	7	3	3	3A	3	3B	7	14	14	14B	7B
HAWAII	21	14	14	7	7	7	7	7	7A	14	21	21
INDIA	7A	14	7B	7B	3B	3B	3B	7	7	7	7	7
JAPAN	14	14	14B	7B	3	3	3	7	7	7B	7A	14
MEXICO	14	7A	7	7	7	7	3	7A	14	14	14	14A
PHILIPPINES	14	14	7B	7B	3B	7B	7	7	7	7	7B	14
PUERTO RICO	14	7	7	7	7	7	7	14	14	14	14A	14
SOUTH AFRICA	7A	7	7	7	7B	7B	7B	14B	14	14	14A	14
U. S. S. R.	7	3	3	3	3	3B	3B	7	7A	7A	7B	7B
EAST COAST	14	7	7	7	7	3	7	14	14	14	14	14A

A = Next higher frequency also may be useful
B = Difficult circuit this period
N = Normal
U = Unsettled
D = Disturbed

1976 OCTOBER 1976

SUN	MON	TUE	WED	THU	FRI	SAT
					1 U	2 U
3 U	4 D	5 D	6 U	7 U	8 U	9 D
10 U	11 N	12 N	13 N	14 U	15 U	16 U
17 D	18 U	19 N	20 N	21 N	22 N	23 U
24/31 N/N	25 N	26 N	27 N	28 U	29 N	30 N

AMATEUR RADIO

73

NOVEMBER 1976
$1.50

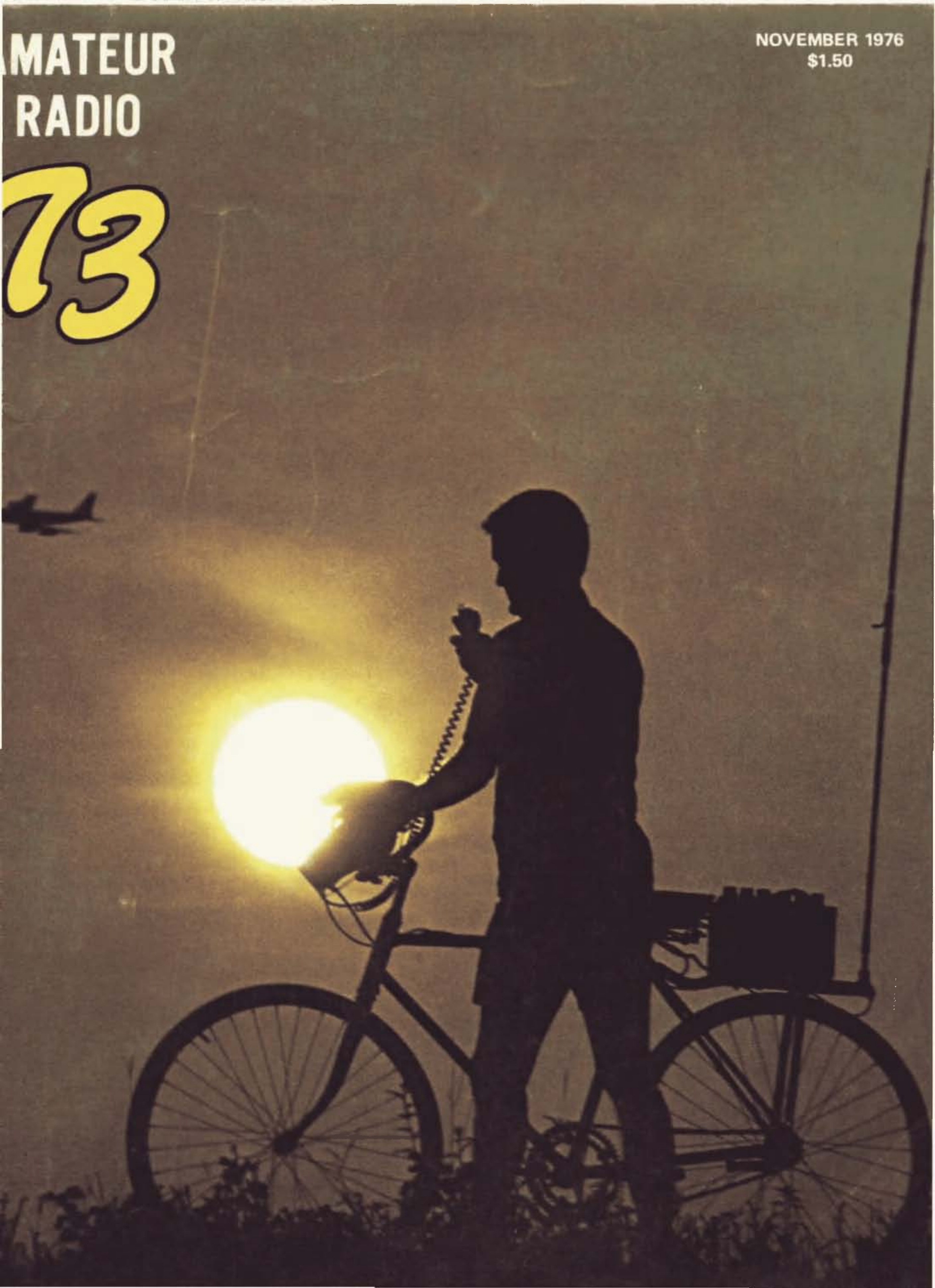

THE 2-VOLUME WEBSTER'S 9-POUND, 1,380 PAGE, 158,000-DEFINITION $39.95 DICTIONARY

NOW ONLY $19.95!

Can you imagine **The New Webster International Dictionary of the English Language** as a victim of recession? It is true! And just as the automakers offered rebates to drastically improve sales, so does Webster announce an incredible half-price slash of the publishers list price of $39.95 to an unbelievable $19.95 on the 1,380-page, nine-pound, 158,000-definition, 196-page supplemented, 2-volume, 1976 edition of **The New Webster International Dictionary of the English Language**. Now Only $19.95.

Think of it! This 2-volume reference work for home, school or office library has never before been offered at such an extraordinarily low price. The many years of exhaustive research are clearly reflected in this supreme lexicographic effort. From this research and from suggestions, contributions and critical review by such notables and men of letters as Charles C. Collingwood, Chief Foreign Correspondent, CBS; Radio and Television Commentator and Mark Van Doren, PhD.; Author; Poet; Professor Emeritus of English, Columbia University, a most respected and distinguished permanent editorial staff labored unstintingly for additional arduous years to give you what has culminated in this priceless, non-pareil etymological endeavor. Everyday, literally hundreds of thousands of people refer to **The New Webster International Dictionary of the English Language.**

The work itself is a joy to peruse and is printed in large, easy-to-read type. It begins with A Historical Sketch of the English Language by Mario Pei, Professor Emeritus at Columbia University. The vocabulary, A-Z, is included in 1,185 pages, with even the most modern of colloquialisms well defined. This section is prefaced with A Guide to the Use of The Dictionary and tables for the pronunciation symbols and abbreviations used therein. Also included is a dictionary of Prefixes and Suffixes with etymologies and meanings.

Noah Webster (1758-1843). Father of lexicography and inspiration for founding of our company.

Other supplements include:

- A phenomenal 51,000-word thesaurus of Synonyms and Antonyms with 4,000 precise cross references—an invaluable adjunct that no dictionary can be without.
- Idiomatic Foreign Words and Phrases—French, Latin, Greek, Spanish, Italian, etc., pronounced and translated into English—a must with our present day emphasis on multilingualism.
- Over 2,500 abbreviations set forth and defined—an acronymic treasure house.
- Musical signs, symbols and abbreviations set forth and explained for even the novice.
- Your knowledge of popular and famous quotations lends credence to your literary background. Hundreds of these priceless comments on a myriad of people, places and things makes this section, in many ways, the crown jewel of supplements. "The wisdom of the wise, and the experience of the ages, may be preserved by quotations."—Disraeli.
- Seven sections comprise the Students' and Writers' Guide; truly a complete reference in itself for high school, college, home and office. The pen is still mightier than the sword!
- Do you want an exact date between 1901 and 2100 AD? This precise, simple, perpetual calendar will keep you ahead of the times, up to date or behind the times. You'll always have the right date.
- Metric or United States (Imperial)—we're here to convert you—and make it quick and easy—in our world of number systems such conversion tables are a necessity.
- Our Occupational Guide lists dozens of jobs and professions with appropriate explanations of necessary training, salary ranges and job availabilities, etc. PLUS an extensive listing of National organizations and addresses that can lead you to the job of your choice.
- The awe-inspiring adventures of both Greek and Roman mythology are detailed in abridged form with appropriate cross references. Constant literary reference to these immortal people and stories makes this section a storehouse of interpretive information.
- The Secretaries' Guide and Manual of Information is a commercial course in itself. It holds the key to being a successful secretary giving detailed and explicit information on the position, office routine, letter writing and filing with complete, accurate and up to date subdivisions for each.
- Multiplication and Compound Interest Tables will ease your way through our "buy it on the installment plan" life. Precise, simple and accurate—if you don't pay cash, know what your purchase costs really are.
- Keep track of your own wages and salary. Timekeepers do make mistakes. These simple, accurate tables permit you to swiftly discover errors of computation in time spans as small as 15 minute periods.
- Most of our lives we eat, sleep and work by the clock. Our magnificent charts will swiftly show you the exact time, on a comparison basis, anywhere in the world—all 24 time zones are at your fingertips.
- 8 pages of exciting, colored reproductions of the flags and banners of the world—a real history lesson.

And now all this can be yours. Two huge, handsome volumes that set on a library shelf will add a touch of grace, splendor, knowledge and erudition to your office or den. **The New Webster International Dictionary of the English Language** has never before been offered at such an astonishingly low $19.95.

Here is our no-risk offer. Send for this beautiful dictionary of dictionaries today. Keep it for 14 days. Thumb through it as often as you wish. You must agree that it is the most thorough and comprehensive dictionary ever published, the one that defines every subtle nuance of a living, pulsating language—or return for a prompt and courteous refund.

The New Webster International Dictionary of the English Language, which lists at $39.95 is now only $19.95. Add $2 for shipping. Hurry and order today. Credit card buyers may phone us toll free at 800-241-8444. Ask for Operator 516. In Georgia Only it is 800-282-1333. In Canada it is 1-800-261-6362. Or you may mail payment with the coupon below.

This recession-induced, money-raising, half-price sale may never be repeated. Write or call now while supplies last. Our toll-free lines are open 24 hours a day, 7 days a week. Allow 3-8 weeks for delivery.

Credit Card Buyers
Phone Toll Free
800-241-8444 Or
Mail No-Risk Coupon Today

The Webster Dictionary Company, Inc.,
Executive Offices,
Dept. 73M-GI, Suite 500,
625 North Michigan Ave.,
Chicago, Illinois 60611

Please send me_____ set(s) of the renowned, authoritative, 2-volume, 1,380-page, 9-pound, 158,000-definition, $39.95 list price New Webster International Dictionary of the English Language at the unprecedented low price of only $19.95 each!! (plus $2 per set for crating and freight). I understand that if I'm not satisfied I may return within 14 days for a prompt and courteous refund. On that basis, here is my order.

(Check one)
☐ I enclose payment
☐ Bill my credit-card account:

American Express #__________
BankAmericard #__________
Master Charge #__________ Inter-Bank #__________
Card Expiration Date__________
Name__________
Address__________
__________ Apt.__________
City__________ State__________ Zip__________

Illinois residents please add 4% sales tax.

CONTENTS

73

#193 NOV 1976

COVER: Photo by Albert Coya WB4SNC. Article begins on page 30.

73 Magazine is published monthly by 73, Inc., Peterborough NH 03458. Subscription rates in the U.S. and Canada are $10 for one year and $20 for three years. Outside the U.S. and Canada, add $2. Second class postage paid at Peterborough NH 03458 and at additional mailing offices. Phone: 603-924-3873. Microfilm edition — University Microfilms, Ann Arbor MI 48106. Tapes — Science for the Blind, 332 Rock Hill Rd, Bala Cynwyd PA 19904. *INCLUDE OLD ADDRESS AND ZIP CODE WITH ADDRESS CHANGE NOTIFICATION.*

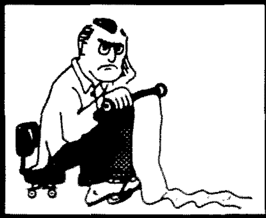

NEVER SAY DIE

. . . de W2NSD/1

EDITORIAL BY WAYNE GREEN

WD CALLS STARTED

The FCC has started issuing WD4 calls, so don't be surprised or think they are just special events calls. What happened to WC calls? These have been reserved for RACES stations and are being bypassed for general ham licenses.

PARKING SOLUTION

The parking lot for the downtown Hartford shopping complex has a special section for CB radio parking . . . right under the watchful eye of the cashier at the exit. This looks like a good solution to the problem of getting CB and ham rigs ripped from your car. You might show this picture to your local parking lot manager and see if he won't provide a similar service.

ATLANTA 73 BOOTH VISITORS

Some well-known hams stopped by the *73* booth at Atlanta and got their pictures snapped.

FCC WRONG

During a discussion on a San Francisco radio talk show a couple weeks ago, I faced the head of the FCC for the area telling me that CB was just awful there . . . bad language . . . a mess. He said that CB might be okay back East where I lived, but I would disown the whole thing if I heard how it was in California.

Continued on page 156

Mike Stahl K6MYC of KLM . . . antennas . . . amplifiers . . . transceivers . . . and much etc.

Gus Browning W4BPD, well-known DXer and publisher of the DX Bulletin. Gus is angling for permission to get back into Bhutan . . . India is fighting him.

Chaz Cone W4GKF of Navassa Island fame . . . and the head of the 1976 Atlanta Hamfest . . . the biggest and best yet.

Tom Gentry K5VOU of Icom in Dallas, and more recently involved with the hobby computer market.

Autobiography of an Ancient Aviator

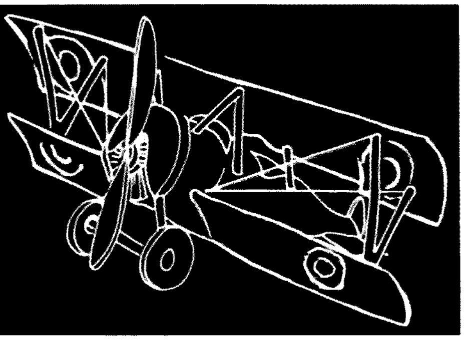

W. Sanger Green
1379 E. 15 Street
Brooklyn NY 11230

I returned to Genoa after a 16 day survey trip to Marseille and the northwest African coast. Genoa felt like home – but not for long. I had three days to make up my report and get ready for a trip to Egypt and the Levant. On January 12th, Jim Eaton flew down to Rome with me on Ala Littoria. Since we arrived late, we just had time to check in at the Ambassadore and have a quick dinner before an evening conference with our Commercial Attaché. This was interesting, as he appeared to know more about Export's plans than Export did. After he finally bought us a drink, we retired.

My schedule was to take the 05:30 Ala Littoria plane from Rome to Brindisi (about 300 miles), arriving there in plenty of time to catch the 10:30 Imperial Airways (British) flying boat to Alexandria via Athens. All very fine. Up at 03:00, shower and shave in haste, no coffee, bus to the 20 mile distant airport, no coffee, bumpy ride to 09:10 arrival at Brindisi, and still no coffee. Then, finally, breakfast at the International Hotel. Then I found that Imperial Airways would be a day late: "Be in some time tomorrow morning." What do you do with a day at your disposal in Brindisi?

That question was solved for me by what you might call a coincidence. Just as I was leaving the Imperial Airways office at the airport I heard well-raised voices in an adjoining room, some Italian and one American that I recognized as that of an old friend – Wesley Smith from Philadelphia. It seems that a fellow named Welch had shipped his plane over to Le Havre and had hired Wes to fly it and him from there to Saigon. They had arrived at Brindisi that morning and had planned on going on to Athens after refueling. The Italian officials had different ideas. Some technicality was preventing them from clearing Wes's flight. Their negotiations were apparently quite difficult due to the Americans not understanding Italian and vice versa. I butted in and helped get matters cleared up by getting the Imperial Airways Station Manager to act as interpreter. By that time, however, it was too late for Wes to start for Athens, so Wes, Welch and I had an enjoyable evening together "on the town." They got away early the next morning, but my 10:30 Imperial Airways flying boat didn't arrive until 13:00. Accommodations and service on Imperial were the best, and we had a good flight to Athens. Wes and Welch were already checked in at the El Brittan Hotel when I arrived, so we had dinner and a night club together. Next morning I had a stormy and very bumpy three hour crossing to Alexandria. Jim McCormack (Export's Near East representative) met me at the flying boat station and settled me in at the Windsor Hotel.

I have a couple of clippings from the Egyptian Gazette (Alexandria) following up the Smith-Welch Saigon flight story. Both dispatches were from Nicosia, Cyprus. The first, dated 1/16/37, reported that Smith and Welch had arrived there at 07:30 that morning after a flight of nearly 600 miles from Athens, and that "The recent rains having left the Airdrome in a very muddy state, the wheels of the machine became embedded in the ground when landing, but were later extricated and the plane was found to be undamaged." The second, dated 1/18/37, stated that Smith and Welch "left at 10:15 for Damascus. The airdrome officials witnessed the takeoff which they believed to be impossible owing to the muddy state of the ground, and they held fire extinguishers ready in case of emergency." I have talked with Wes about this trip several times since at Quiet Birdmen meetings in New York.

I found that Jim McCormack had a fairly tight schedule arranged for me. My first evening in Alexandria he took me out to Judge Brinton's home after dinner to obtain his advice on how to proceed with my mission in Egypt. The judge was an American and for years had presided over the "Mixed Court" in Alex. He was very friendly and advised us not to talk with any Egyptian officials at that time, but to put the matter before Mr. Childs, our Consul, and the Minister (don't remember his name) in Cairo for our guidance. So we made an appointment with them for Sunday afternoon, January 17th, and rode the railway up to Cairo. They told us that since the August 1936 Anglo-Egyptian Treaty which turned the government of Egypt back to the Egyptians, most of the new government's efforts had been directed at replacing British civil servants with Egyptians. They thought that the time was inopportune to try to talk with them about air rights. Their advice was to wait a few months until things had settled down a bit. With this, my business in Egypt was concluded for the time being. I still had Haifa and Beirut to check, but had to wait until January 23rd for the Exochorda (one of Export's Four Aces) to make the trip up the Levant coast and back. A brand new Chevrolet sedan belonging to John Gehan was unloaded from the Exochorda at Alex. It already had Italian number plates on it and a note from John Gehan told me that it was completely insured and to use it as much as I wanted to. I didn't have an international driver's license (don't even know whether they were available at that time), so I took out an Egyptian driver's license and drove all around Alexandria as well as to Rosetta, Damanhur and other native villages. Driving through a native village was a pretty slow process in those days. No amount of horn blowing, yelling or nudging would get a person, donkey or camel to move over to let you pass – particularly in a narrow street. Small boys would jump on your running board, some for the ride, but mostly to yell for alms.

Alexandria is pretty well surrounded by water with the Mediterranean on the north, Lake Mariut on the southwest and Lake Idku on the east. Both these lakes were too shallow for flying boat operations. It wouldn't take much wind to build up too much of a sea. Imperial Airways used the ship harbor which was well protected, so I decided to recommend that for our use.

Speaking of Lake Mariut reminds me of the novel way of catching wild ducks that was practiced in the lake. As I mentioned before, Lake Mariut was quite shallow in places. Several Egyptian young men equipped with weighted shoes, a hat with a lot of reeds or rushes sticking up from it, a wide belt with cord loops attached all around it (20-25) and five or six live decoys with strings attached to one leg, would wade out in the lake until the water was nearly up to their chins and have the decoys swim around near their hats. Cruising wild ducks would spot the decoys and join them. When one got close enough, the hunter would grab its feet and pull it under water and attach its feet to a loop on this belt where it would drown quickly with a minimum of commotion. When his belt was full he would bring them into the city (Alex) and sell them for anywhere from 10 to 20 Piasters each (50¢ to $1), according to the buyer's bargaining ability. They were mostly small black ducks and were delicious if not overcooked. Guess I better stop here and not get into any cooking directions.

Next month: Jerusalem to Beirut in 1937.

Tracking the Hamburglar

PURLOINED: TR22-C s/n 850278; Swan 350 s/n C847975. These were taken from my automobile at the Northwest Plaza shopping center in St. Ann, Missouri on June 24, 1976. Please contact W2ZKE, 1150 Staffler Road, Bridgewater NJ 08807.

STOLEN: Regency HR2-B s/n 49-05424. Contact Well Howell WA2RZP, 107 Ivy Lane, Bridgewater NJ 08807, 201-526-4128.

SHANGHAIED: EBC-144JR, 2 meter transceiver, s/n 7514359A and "tuna two" home brew antenna with magnetic mount. Taken from automobile in Basking Ridge, New Jersey on August 10, 1976. Unit is inscribed on bottom with: J.C. Maikisch WA2OFT, 089-32-6899, M01814076312424, (201) 538-1667. If found please contact John Maikisch WA2OFT, H-11 Farmhouse Lane, Morristown NJ 07960, 201-538-1667 or Bernards Township Police 201-766-1122.

KIDNAPPED: Genave GTX-200 #20-37 taken from my car on 12/10/75 in New Haven; Genave GTX-200 #32-44 taken from my car on 3/25/76 same place. Both had USAF/MARS and CAP repeater xtals in them. Contact William M. Welch WA1BER, 34 Sunset Road, West Haven CT 06516.

ABDUCTED: Drake ML-2 and mounting bracket s/n 11446. Stolen on evening of June 17 from James R. Johns WB2FHS, 24 Fairview Drive, Middletown NJ 07748, 201-842-8403.

LOOTED: IC230 s/n 2840. Contact David Mello W3FOR, 208 E. University Pkwy., Baltimore MD 21218, 301-366-2157.

HIJACKED: Regency HR2B, s/n 49-02817. Stolen from automobile. Microphone cable is hand-wired to set (instead of conventional cable-jack). Kristen N. Johnson WA1TJP, 86 Alton Road, Quincy, Mass. 02169.

BE MY GUEST

visiting views from around the globe

Belle

Hurricane Belle turned out to be much less of a storm than expected. But Civil Defense officials and radio amateurs from South Carolina to Maine were ready. By the time Belle, packing 80 mile an hour winds, hit Long Island and Southern Connecticut on the eve of August 9th, local CD directors and their ham helpers had as much as four days' notice.

In most areas, 2 meter repeaters furnished the first line of communications. Here in New Hampshire, for example, the Concord 34/94 (W1ALE) was taken over by the state Civil Defense, led by W1EDU, who set up a 2 meter control base at the Concord Armory. 34/94 then became the primary link for the entire state CD. That was more than twelve hours before Hurricane Belle, in a much toned down form, rolled into southern New Hampshire.

On the lower bands, weather and Red Cross nets were the order of the evening, with SSB taking the biggest load. CW nets were started up, but the volume of takers was insignificant compared to the SSB nets. Northeastern University Club Station W1KBN utilized an FCC designated emergency frequency at 3910 and dispatched net controls plus liaison stations at ten kHz intervals according to state. It was possible to tune any area, any state and get the latest track on Hurricane Belle. Meanwhile some states had started their own nets, extending the earlier established 2 meter FM nets.

ARRL Memorial Station W1AW jumped from net to net, gathering the latest information, and passing it along to the rest of the country by Official Bulletin. *73* staffers WB6BED/1 and WA1GUD/1 manned 75 meters for New Hampshire until nearly 0200 local time.

It was something to behold – 2 meters and the low bands linked by control stations, tying the entire eastern seaboard together with emergency communications, much of it on emergency power. Through the next day, August 10th, local groups continued their vigil, watching over swollen streams and rivers, and assisting in the few evacuations that were necessary.

Many local CD officials first heard the course of the storm from hams monitoring on the low bands, and relaying word by 2 meter FM. CBers too played their role, furnishing coordination between emergency officials and Red Cross groups. There were only a few reports of problems between CB and amateur groups, but they were promptly cleared up after some ham diplomacy and a demonstration of what 2 meters could do. It was easy for local police and fire officials to draw a comparison between their own FM Public Service communications and the amateur systems.

So, if Hurricane Belle is to go down in the amateur radio record books, it would have to be a measure of just how well prepared we are. Despite the lack of a life and death emergency in the long run, New England's experience with Belle proves amateurs are ready and able to furnish immediate and reliable communications. But it is a lesson as well in the value of advanced warning, and the need for continued planning at the local, regional and national levels.

Warren Elly WA1GUD/1
Deering NH

Dixie

Dave Blackmer, the retired Air Force man who lives in Nipomo, is an amateur radio buff. He has his own 1,000 Watt station, WA6UNK, and spends countless hours talking with and listening to people around the world. He was thus engrossed last Thursday afternoon, moving his dial to see what was going on.

Suddenly there came an SOS signal from a yacht off the coast of Baja California. The yacht, becalmed and with an ailing and idle engine, had aboard a man who appeared to be suffering from a heart attack. His wife was at the radio transmitter, sounding her emergency call.

Dave latched on. Next thing he did was to get a telephone patch to Marian Hospital's emergency ward, where Dr. Carl D. (Doug) Shaw was on duty. For about 15 minutes Doug and the stricken man's wife discussed the case and he advised her. Then came an emergency at Marian and Dough had to attend to that, so Blackmer now patched the woman into Arroyo Grande Hospital and Dr. Carl Shirk.

The woman (her name is Dixie but the amateur radio buffs don't use last names) read off to Carl the list of contents in the yacht's emergency kit.

"You've got everything you need right there," the doctor told Dixie. Then he told her how to administer a shot and otherwise care for her husband.

Meanwhile, an amateur radio operator in Panama City and one in Uruguay picked up on the conversations and posted themselves above and below the wave length in use, to keep others from butting in and interfering. Also, a ship in the neighborhood locked in on the conversation and made it to the disabled yacht to take the patient (he had strained himself lowering the anchor) to shore.

Dave, in the middle of all the excitement, doesn't know how it all ended. Just at this point the wind blew over a tree in Nipomo, cutting off his power. When service was restored, the emergency was apparently over and the airlanes were quiet.

Reprinted from the Santa Maria (Cal.) Times, *June 14, 1976.*

Aloha

Tony Tamosaitis K1VTE of 147 Neal St., Malden, Massachusetts, provided a unique way for ham radio operators in seven states to celebrate our country's 200th birthday.

On Sunday, July 4, originating at 5 pm local time (11 am Hawaii time), the 19/79 amateur radio repeater WR1ACO located at Beachview Ter., Malden, was linked simultaneously with WR6AGE in Honolulu, Hawaii and WR3PHL in Valley Forge, Pa. After establishing the link-up, network control stations asked for a roll call from the three repeaters. Amateur radio stations from Massachusetts, Maine, New Hampshire, New Jersey, Pennsylvania and the first and fiftieth states respectively, Delaware and Hawaii, checked in to begin communications.

Also included in the Hawaiian link were the smaller islands of Maui, Molokai and Oahu.

One of the first stations into the Hawaii system was WA1SQR marine mobile aboard the *Fifth Amendment* off Cape Ann exchanging greetings with KH6IPN in Honolulu. Throughout the evening, base stations, marine mobile, land mobile and hand-held walkie-talkies communicated and exchanged greetings from the East Coast to the West Coast.

The high point came early in the four-hour link-up when AA8ARV/KH6 transmitted the following message: "This is AA8ARV portable six, hand-held walkie-talkie in Waikiki. The Lieutenant Governor of the state of Hawaii, Nelson K. Doi, has asked me to extend to all stations participating in this historic link-up of the East Coast with the West Coast of the United States and the first and fiftieth states in the Union, and other historic places, his warmest congratulations. The Lt. Governor is well aware of the contributions of ham radio not only to the local communities, but also to our nation. And in keeping with the spirit of our Bicentennial, he extends warmest aloha to all stations and operators participating in today's historic link-up. This is AA8ARV portable six Waikiki ... back to KH6IPN Hawaii control."

The Hawaii link was terminated at 8:45 pm and communications through the Philadelphia link continued until

9:15 pm when this link was terminated.

The stations handling net control duties were as follows: Tony Tamosaitis K1VTE, assisted by Tom Cook K1OCD, handled the Hawaii input at the Beachview Ter. repeater site, and also the Philadelphia input fed in from a remote station operated by Alan Carp K1HLZ, assisted by Frank Carp WA1RIY, both of James St., Malden, Mass. Net control operators in Philadelphia were Jesse Wagner K3GKB, assisted by Bill K3JPB. In Hawaii Don Blaisdell KH6IPN was assisted by Steve Gross KH6HGG.

Reprinted from the Malden Evening News, *Malden, Mass., July 15, 1976, and the* Medford Daily Mercury, *Medford, Mass., July 15, 1976.*

Giving Nothing and Expecting Nothing

One of the local QRpers came by last week and we sat in the sun to watch the bees work hard to make a living. The well-aged QRPer was a bit restless, and we thought we knew the answer. "Been reading 'Silent Keys' in *QST* again?" we asked, and the QRPer nodded. After a bit he spoke. "This DXing has always been an unusual thing to me," he said. "A DXer makes an acquaintance that may be thousands of miles away, in another country, and with the odds that most will never meet face-to-face. Yet there exists a bond and that feeling of loss when they are no longer with us. Why is that?" In turn, we held our own silence, for the feeling has often come to us also. Finally the QRPer spoke again. "I have long felt that DXers offer what is closer to true friendship than any other activity. We meet another DXer on the air, we give nothing and expect nothing. Only friendship. That and nothing more." We both were silent for a long time after this, for most DXers do know the feeling and the friendships. The true Internationalists of Amateur Radio are the DXers, and their bonds of friendship are far flung. Come! Join with the DXers who want naught but friendship and a new country or two once in a while.

Reprinted from the West Coast DX Bulletin.

Oscar Orbits

Oscar 6 Orbital Information					Oscar 7 Orbital Information			
Orbit	Date (Nov)	Time (GMT)	Longitude of Eq. Crossing °W	Mode	Orbit	Date (Nov)	Time (GMT)	Longitude of Eq. Crossing °W
18500	1	0108:17	74.8	B	8974	1	0016:01	53.8
18512	2	0008:13	59.8	A	8987	2	0110:18	67.4
18525	3	0103:09	73.5	BX	8999	3	0009:38	52.2
18537	4	0003:05	58.5	A	9012	4	0103:55	65.8
18550	5	0058:01	72.3	B	9024	5	0003:15	50.6
18563	6	0152:56	86.0	A	9037	6	0057:32	64.2
18575	7	0052:52	71.0	B	9050	7	0151:49	77.7
18588	8	0147:48	84.7	A	9062	8	0051:10	62.6
18600	9	0047:44	69.7	B	9075	9	0145:27	76.2
18613	10	0142:40	83.5	AX	9087	10	0044:47	61.0
18625	11	0042:36	68.5	B	9100	11	0139:04	74.6
18638	12	0137:31	82.2	A	9112	12	0038:24	59.4
18650	13	0037:27	67.2	B	9125	13	0132:41	73.0
18663	14	0132:23	81.0	A	9137	14	0032:01	57.8
18675	15	0032:19	66.0	B	9150	15	0126:18	71.4
18688	16	0127:15	79.7	A	9162	16	0025:39	56.2
18700	17	0027:11	64.7	BX	0175	17	0119:56	69.8
18713	18	0122:06	78.5	A	9187	18	0019:16	54.6
18725	19	0022:02	63.5	B	9200	19	0113:33	68.2
18738	20	0116:58	77.2	A	9212	20	0012:53	53.0
18750	21	0016:54	62.2	B	9225	21	0107:10	66.6
18763	22	0111:50	76.0	A	9237	22	0006:30	51.4
18775	23	0011:46	61.0	B	9250	23	0100:47	65.0
18788	24	0106:41	74.7	AX	9262	24	0000:08	49.8
18800	25	0006:37	59.7	B	9275	25	0054:25	63.4
18813	26	0101:33	73.4	A	9288	26	0148:42	77.0
18825	27	0001:29	58.4	B	9300	27	0048:02	61.8
18838	28	0056:25	72.2	A	9313	28	0142:19	75.4
18851	29	0151:20	85.9	B	9325	29	0041:39	60.2
18863	30	0051:17	70.9	A	9338	30	0135:56	73.8

Looking West

Bill Pasternak WA6ITF
14725 Titus St. #4
Panorama City CA 91402

I have always found that a trip aboard an airliner is a great time to relax and let your mind wander, to go off in search of new directions and ideas. At present I am somewhere over middle America on United Flight 5, enroute from New York's JFK International Airport back to my wife Sharon and my home in Los Angeles. More on this unplanned trip later, but for the moment join me aboard this Boeing 747 and think about a subject that is very much a part of amateur radio: tradition.

When you have been around as long as amateur radio, you are bound to develop some traditions along the way. First, though, we should ask ourselves the meaning of the word, "tradition." Since you rarely find a copy of *Webster's New World Dictionary* on a 747, I will have to trust my memory and interpret the word to mean a respect, reverence and/or following of things that have come before, a respect for a part of history. In our world of amateur radio, there has always been a lot of respect for "the state of the art," the technology and operating guidelines amateurs use to communicate more efficiently.

The traditions of amateur radio have made us a proud lot, and rightfully so. If it had not been for the early pioneers of communication (the "amateurs" who refused to quit when the rest of the world stood by laughing at their hair-brained experiments), there is a good chance the hobby/service we all love (as well as all other forms of communication like the AM radio station we listen to daily) would have never come to pass. You and I know how much amateurs have accomplished over the years and how amateur radio has benefitted all mankind.

Now, enter the VHF repeater. I have often heard it said by many a long-time amateur that repeaters and the type of operation they foster are nothing but a breakdown of the traditional operating practices that are indeed an integral part of amateur radio. I have lost count of the number of times that fellow amateurs have come to me and said that we need more of the traditional things of VHF amateur operation, such as working DX on six and two, or more utilization of the VHF bands for CW practice, and less about these "new-fangled" repeaters that are destroying amateur radio.

I have to feel sorry for these people, because they fail to realize one very important aspect of "tradition" — and that is the fact that tradition can and will change with time and that each of us individually will contribute a bit to what amateurs yet to be born will call the "tradition of amateur radio." They fail to realize that repeaters are to the 1970s what the advent of SSB was to the late 50s and early sixties, and indeed what the now ancient "rotary spark gap" was to the very foundation of amateur radio in its earliest dawning days. No, the VHF FM repeater is not and can

Caught at the June SCRA meeting is the man generally credited with being the "Father" of VHF repeaters: Art Gentry W6MEP, owner of WR6ABN (formerly K6MYK).

never be what many consider the traditional way in which amateurs should operate. The rather rigid channelization necessitated by repeater operation is to many a direct contradiction to the way that they have operated their amateur stations for many a year. It was to me, when I first got involved in this rather unique aspect of the hobby almost 12 years ago. However, rather than fighting it, I was willing to accept the challenge offered and never have regretted my decision. Even putting aside the technological knowledge I have garnered over the years, and not counting the many lifelong friends I have gathered along the way, operating a diverse number of repeaters and learning more about my fellow man has made the "trip" well worth it. For indeed, the VHF repeater has become the melting pot for people representing every aspect of both amateur radio and our society in general.

No, the VHF repeater is not "yesterday's" traditional portrait of amateur radio. It is a new aspect of our world, and along the way it is creating a lot of traditions of its own. Best of all, you and I are helping to create for the future some sound traditions, since we are a part of this "wild new breed" of amateur.

The .01-.61 problem is well on its way toward a solution, thanks to a lot of hard work by SCRA Chairman Bob Thornburg WB6JPI. As I have stated in the past, being involved as a control station for one of the two systems, namely PARC's WR6ABB, I did not feel that I should personally comment on this situation. Thanks to the SCRA, I have been spared being put in this position, since the following report to the SCRA membership by Chairman Thornburg more than details the problem, the points of responsibility in the situation and what steps the SCRA is taking to solve the problem.

SCRA
THE .01-.61 PROBLEM
STATUS REPORT
June 17, 1976
Bob Thornburg

1. By majority vote (Item 13 of the February 21 meeting), the SCRA chairman was directed to instruct WR6AFR to vacate the .01/.61 pair and resubmit for coordination on a different channel pair.
2. This motion was passed based upon the Technical Committee's report of the investigatory measurements. This report was first presented at the February meeting.
3. Examination of this report clearly showed that, indeed, interference could and did exist but:
   a) It took 200 W ERP to make .85 uV in ABB from the best (worst) site.
   b) It also showed that ABB has a 10-15 dB alligator ratio, i.e., 200 W ERP = .85 uV at ABB but ABB put 6.5 uV back at the same site.
4. Based upon reexamination of this data and
   a) at that time a strong feeling that WR6AFR would not submit to moving, and
   b) that a demand by the SCRA for them to vacate and resubmit would be ignored by AFR,

The measured data just wasn't felt to be of enough significance to convince and the interference problem would continue if this line was followed.

5. As an alternative, Bill Wood arranged a meeting with AFR to discuss the problem. On April 23, Bill Wood, Bob Thornburg, Kit and Marvel Clover, and Dick Miller met and the following came out:
   a) SCRA has in the past pointedly ignored the high desert and the attitude of the high desert people is that the SCRA did not care nor would be interested in coordinating AFR. So AFR measured many frequencies and concluded .01/.61 was the best from their site. This was before ABB put up the Micor.
   b) Now the ABB output is very strong in the high desert and required a beep/delay mode on AFR to separate the two repeaters in the high desert.
   c) Kit felt he could control his users to reduce the interference into ABB.
   d) Only if all else failed and the interference to ABB was (is) significant would he move frequencies.
   e) In Bob Thornburg's opinion, Kit is an amateur in the true sense and interested and sensitive to the interference problem. He is employed as Range Frequency Coordinator at Edwards, technically competent, and has a fine home brew repeater with most all the bells and whistles. He is also defensive of his users, but aware of their involvement in the interference problem.
   f) The following morning I attended a breakfast with about 100 of the users of AFR and, again, was impressed with their respect for Kit and the performance of AFR.
6. The SCRA Technical committee first heard of the interference to ABB in about February, 1975, and did nothing (due to other more pressing problems) until November, 1975, with

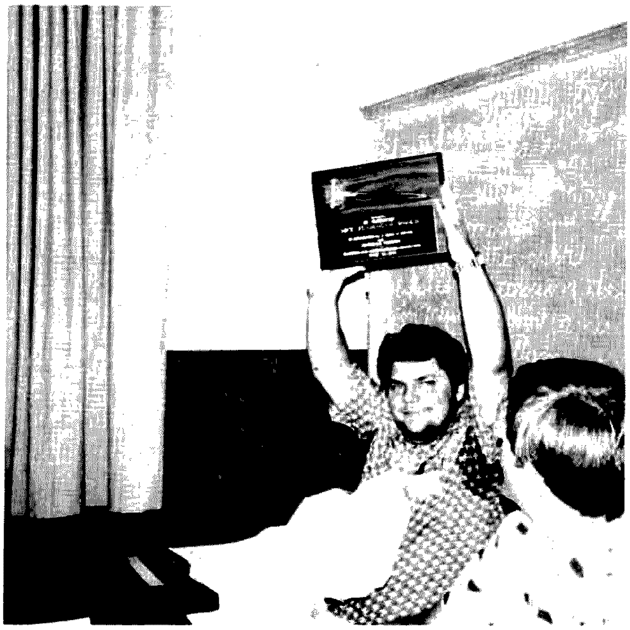

Don Root, SCRA Secretary, displays plaque awarded to ex-SCRA "Chairperson" Dick Flanagan W6OLD for his many years of service to the SCRA.

Meet the SCRA's 1976 "Mr. Chairperson" Bob Thornburg WB6JPI, as he conducts an SCRA meeting with Vice "Chairperson" Charlie Ellis K6PNM at his right.

Ed Tipler WA6KYZ, climbing antenna pole of WR6AMZ. Photo by Jim Rieger.

the Technical committee's report coming out in February, 1976. By this time, AFR was well established serving, and serving well, about 100 users in the high desert.

a) Interference does exist to ABB and don't forget it, but

b) Due to the delay in the SCRA action, and due to the SCRA's interpreted position on the high desert, I do not feel it is justified to label AFR as a renegade or pirate repeater.

7. A special meeting of the ABB repeater committee was held on May 14, 1976, for Bill Wood and myself. At this meeting, the following came out:

a) The interference to ABB from AFR users is severe and could be documented in detail if necessary.

b) PARC is possibly willing (based upon membership approval) to assist in funding a move by AFR – like sponsoring a mutual fund raising "event."

8. The information from the PARC repeater committee meeting was relayed to AFR by Bill Wood and the present position of AFR is:

a) AFR will move if it must.

b) AFR suggests maybe – possibly – please – ABB could put a NNE null in their antenna pattern. 6-10 dB is all that's needed.

c) Principal interfering base stations have been asked to reduce power toward ABB.

9. Clearly, WR6ABB has no liability or blame in causing, or continuing to cause, interference to their repeater. However, and as always, they are being "good guys" and constructively trying to resolve the problem.

10. I would like the SCRA to recognize the cooperation of both groups and provide the technical committee the following help in resolving this problem:

a) Recognize AFR as a cooperative entity by directing the Technical committee to renew AFR's testing status, valid for 90 days, with a recognized and working interference problem. Final coordination will only be issued upon resolution of the interference problem.

b) Remove the requirements of the SCRA motion.

While speaking about the high desert area of California, and repeater operation in that area, we are happy to introduce a new addition: WR6AMZ on Laurel Mountain, near the town of Ridgecrest, California. This system has been coordinated to and operates on a channel pair of 146.04 in, .64 out, and is co-channeled with the San Diego-based Mt. Otay system, WR6ACF. While on days that the famed Southern California inversion is "in," there does exist a bit of overlap between the coverage of the two systems; in my opinion this is a good choice, in that it permits the traveler coming from the high desert area en route to San Diego almost continuous coverage using that single channel pair. It is, I guess, also the price you have to pay when there are more repeaters than there are available channel pairs on two meters. I have a feeling that in densely populated areas such as this, with thousands of amateurs using VHF and the need for more repeaters ever on the increase, the day of the "super wide coverage, talk-to-the-world" repeater may be drawing to an end. As we grow, and as we need spectrum space for more and more repeaters, the time will come when we all may have to give up a bit and learn to share for the common good of all amateurs. But . . . we are getting off the subject at hand.

WR6AMZ is the brainchild of Ed Tipler WA6KYZ, through whose technological know-how WR6AMZ came to be. Ed is one of those super nice guys who seems to care about the amateurs around him. He decided that AMZ would be a good way to help the amateurs of his community as well as the many transients crossing the high desert equipped with two meter radios. He went forth to create his fully solid state home brew two meter system. Ed designed it so that if you could hear it, it would hear you and when you could not hear it any more, it would not hear you either . . . a "by-the-book" repeater, inversion notwithstanding. The word coming back to me from amateurs who have used it is that AMZ works like a champ and is a pleasure to operate. Come SAROC-Las Vegas time, we will have a chance to see for ourselves . . . if not sooner. AMZ may be smaller than a breadbox, but from what I have heard, it delivers. My thanks to Jim Rieger for the fine photos of the AMZ operation.

When a VHF-type amateur hears the term scatter, he usually thinks in terms of bouncing signals of the ionized tails of meteors as they burn their way through our atmosphere. Any true "traditional" VHFer will tell you that you can make some rather spectacular contacts that way, especially if you are adept at high speed CW. All this notwithstanding, when you mention "scatter" here in the southland, you are more than likely talking about a new group known as the "Southern Counties Amateur Teleprinters Society" or SCATS, with *SCATTER* being the title given to their monthly newsletter. SCATS is a new RTTY organization that sponsors an open VHF RTTY repeater, WR6ACA (146.10 in, .70 out), located atop Contractor's Point in the northeast San Fernando Valley and with coverage over a wide area of Southern California. As its newsletter, edited by Arny Gamson K6PXA, states: "The purpose of the club is firmly established on the five principals of the fundamental purpose of the amateur radio service as defined in the FCC rules and regulations. In essence: (A) Public Service; (B) Advancement of the radio state of the art; (C) Improvement of skills; (D) Expansion of operators and technicians; (E) Extension of local, national and international goodwill. The club was established for the purpose of achieving these objectives through the unique mode of telecommunications (radio teletype) and to achieve satisfaction and fun while accomplishing this."

While around for only about half a year now, SCATS is well on its way toward achieving its goals. Already they have instituted regular meetings on the second Saturday of each month, alternating between Los Angeles County and Orange County, have gotten WR6ACA totally revamped and fully operational, have set up a weekly SCATS net via ACA that

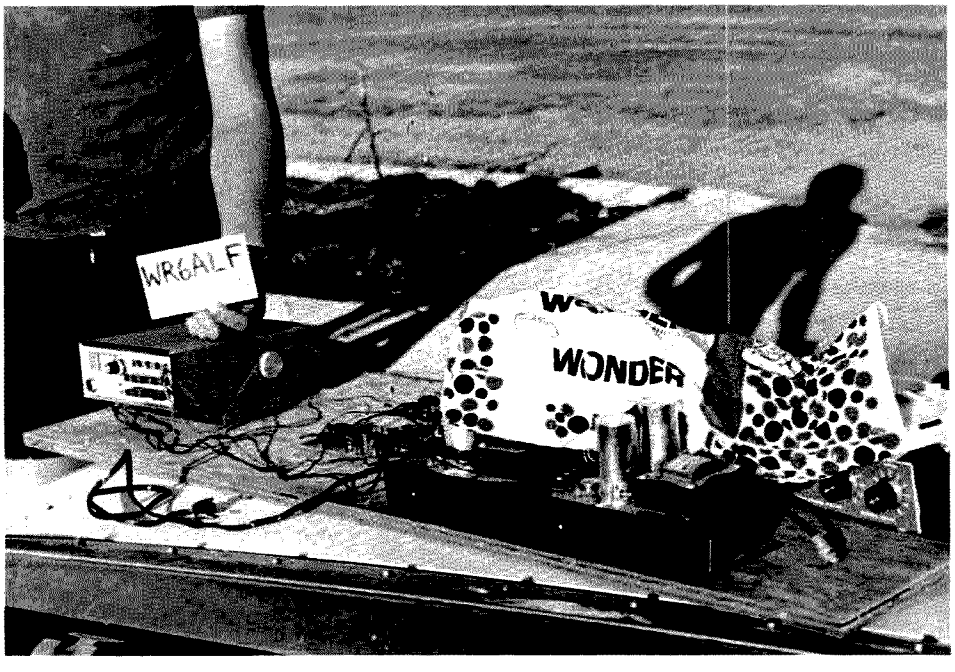

"Breadboard" system of WR6AMZ. Photo by Jim Rieger.

meets every Wednesday at 20:00 hours local time, have gotten active in amateur radio public relations, have held their first annual picnic at the ACA site, and have done a myriad of other things too numerous to mention. They are an interested, progressive group of amateurs who have found another way of serving their community through their hobby, and thereby serve the goals of amateur radio itself.

They also put out one of the most professional-looking newsletters passing through these portals monthly. I wish that you could get a look at it yourself – it is just chock full of information about happenings within the organization, as well as information about the RTTY mode itself. Unfortunately, the cost of sending out individual sample copies to every amateur requesting such would be highly prohibitive, according to my discussion with Arny; however, the club is willing to send a sample to any radio club interested in RTTY, and/or set up a "bulletin exchange" with such organizations so that knowledge can be shared by all. If your organization is into RTTY, then an SASE to Arny Gamson, Editor, *SCATTER*, 8034 Gentry Avenue, North Hollywood CA 91605, will get the ball rolling.

As I said earlier in this column, I am en route home after almost two weeks in the "Big Apple." A few quick but interesting sidelights on what I picked up in the way of "repeater happenings" while back there . . . or perhaps I should call this "what a difference 10 weeks make," since it has only been that long since I was last there.

First, when I was here in late April, as usual I found WR2AAA on .13-.73. Well, that has all changed. While most of the faces . . . errr . . . voices are still the same, both the callsign and the equipment are new. According to a long-time friend Ted WA2RGB, one of those in charge of the system, the ID now says WR2ACX, the old GE Progline of the AAA days has been replaced by a shiny new VHF Engineering repeater, and a support group, the .13-.73 Repeater Association, is now in its formative stages. The machine works great, but if you plan to use it, you had better be smack on channel and have your deviation level set properly, as that receiver is razor sharp and will squelch out if your deviation level is too high. With this move, .13-.73 has gone full circle in NYC from the early days of WA2SUR, through WR2AAA, then the revamped WR2AAA on its 1 MHz channel pair of 147.73 in/146.73 out, and now to WR2ACX/2 back on .13-.73. As of this writing, ACX operates from about 6 am till 11:30 pm, but Teddy told me that as soon as a few technical improvements are made they plan to go 24 hours a day. In the meantime, much success to Teddy and crew on one heck of a good "Big City" repeater system.

Secondly, LIMARC, the Long Island Mobile Amateur Radio Club, has put on the air the New York area's first amateur television repeater. The purpose is two-fold, according to Ed Piller W2KPQ, who sort of fathered the project. First, to foster full utilization of spectrum space in order to protect the amateur service from the onslaught of other services that are after the frequencies we now use. Secondly, but equally important, is the intention of LIMARC to use this machine as a tool to interest and educate the public as to what the amateur service is all about, as well as a teaching aid in the training of new amateurs. Rather than go further at this time, I am planning an "LW Feature" on this system and its diverse uses, based on a telephone interview I did with Ed just prior to this trip. That will be coming up in a few months, so hold tight; I think you will find the concept of interest.

The Captain just announced that we will be landing at LAX in about an hour and a half, so that puts us someplace over New Mexico – probably just north of Albuquerque. With the shades pulled down so that everyone can enjoy the inflight movie, I do not want to disturb people by opening mine to look out; besides, having made this trip so many times I can just about guesstimate it. It's been a good trip home, "smooth air" all the way and, as anyone who has ever been on a 747 will tell you, rather a quiet trip as aircraft go. I only wish that the trip had been made for more pleasant reasons, but life does take its toll on us all and such was the case.

About 13 days ago my brother Bob called to tell me that our dad had entered the terminal phase of his illness and that it was time to come East. A week ago Sunday, I flew the other complement of this flight, United 8 to NYC, so that I could be with Dad for whatever the future would hold for him. The Almighty was good to him, in that he did not suffer long and passed on very peacefully at 2:30 last Monday. Bob and I were with him to the end.

I would like to take this opportunity to publicly thank the "users and management" of three New York City area repeaters, namely WR2ACX/2, WR2ACD and WR2ADM, for helping to lighten my burden a bit. It was no secret as to why I had made the trip East and anytime that I felt the need to talk, to let go a bit, there was always a fellow amateur who cared to be found just on the "other side" of my Tempo FMH. I spent many hours in QSO with some of the greatest people I have ever known, the users of the three aforementioned repeaters. While a lot of these people were old friends, many were new faces to me, many not even amateurs when I moved away from New York, many knowing me only as the voice of this column. They all had one thing in common: in the true spirit of amateur radio they cared about me and the situation I was facing. They went out of their way to try to help, to be friends to this "stranger in a strange land" sporting a 6 callsign and ending a QSO with a bunch of numbers.

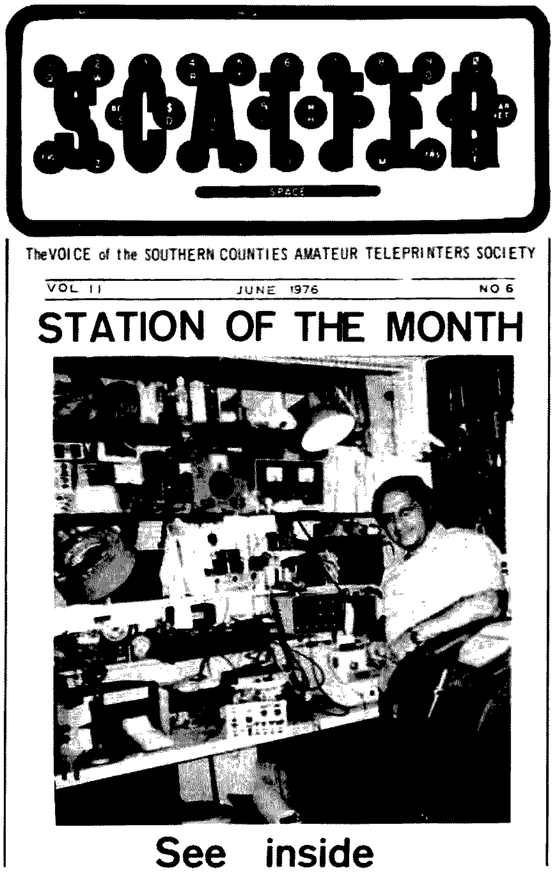

There are a few people whom I must give a personal thanks to for reasons they best know themselves: to Lou K2VMR and his fantastic XYL Linda; to Larry WA2INM; to Doc WB2NDI; to Norm WB2IPQ. To all of you in the "Big Apple": What you did on my behalf will never be forgotten and you will all live in my heart and mind forever.

If all goes as planned, next month will be a rather special column. It has been announced that Commissioner John B. Johnson K3BNS will be visiting Los Angeles, and we are trying to arrange an interview with him. Will it come off? Drop by next month and find out.

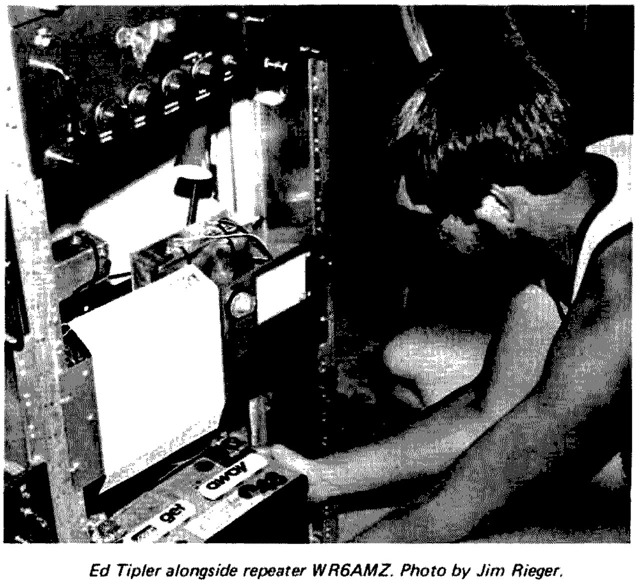

Ed Tipler alongside repeater WR6AMZ. Photo by Jim Rieger.

LETTERS

BIRCHER

What is with these old-timers who hate CBers? When I was 9 years old I got my first CB radio; there were 22 people on channel 23, all of whom were 9 to 13 years old. Out of those 22 people, 18 went on to become hams; 3 now have E.E. degrees, three have first phones, and all of those 18 are in the electronics field. Without any question, CB radio was the thing that sparked them onto electronics and took them into the world of ham radio. If anyone has or knows of a young person who wants to be a ham but is not ready to take a code or theory test, send him on to CB radio. I know that it works to promote ham radio.

James W. Menefee, Jr. WA4KKY
New Albany IN

P.S. For myself, CB radio was the thing that got me going in the radio field. At the age of 23 I am the youngest station manager in the country! I also want to thank you for some of the finest editorials I have ever seen. Some of the local hams (Louisville) know that I support you, and think that I must be a John Bircher of ham radio. Keep up the good work.

KEEPING UP WITH HERB

I was quite shocked to read KL7AE's letter in the September *73*. I ordered Wilson HTs for 2m and 450 MHz on the first of June, and now 8 weeks and 3 phone calls later I still am awaiting my HTs from those Wilson "Good Guys." Who did Herb know to get such service?

Bill Fulcher W4AST/K4RTA
Hendersonville TN

BUG!

Please publish the following corrections to my "Touchtone Sequence Decoder" article published on page 52 of the June issue of your magazine: 1) missing pin number on top of the 74122 in Fig. 4 is pin 11; 2) wire from pin 12, IC1, Fig. 4 goes to pin 9 of IC1, not pin 8 as shown; and 3) in Fig. 2, the C3 symbol is reversed. The plus side must face pin 6 of the 741 if the circuit is to work properly.

C. W. Andreasen WA6JMM
Van Nuys CA

&#*$(%.!!!

I have just applied stamps to two letters. One requests a couple of tapes and some back issues of *73*, and the other a subscription to *73*. Even though I have never seen an issue before this day I am sure that I will be very satisfied. Your magazine has style. I particularly enjoyed your editorial pages. For some reason they remind me of John Campbell's editorials.

Now for some invective: @*#¢%*#¢ #&$(@*#¢ &#*$(%.!!! Why didn't someone tell me? Here I am patiently plugging away at the code on a record that I purchased in good faith, and now I find that the test will be administered at 13 wpm spaced to 5. I do not remember this fact being mentioned in any publication which I have read. In fact, I do not remember it being mentioned in either your books on General class, Advanced class, or Advanced Extra licensing. The point is, you say that it might be well for prospective hams to attempt General class immediately. I would have, had I known that little 13 wpm fact from the beginning. Now I get that sinking feeling that comes from going to Jail without passing Go. So maybe it was in your Novice book. I confess I only skimmed it, since by the time it got back to the library I had already read the General book. It would have been nice had there been some mention of the fact in the General book. It would also have been nice if there had been some mention of how one might have subscribed to *73*, along with the fact that the book is a reprint of articles from that magazine. Spilt milk.

May I say Amen to Mr. James Whitfield's comment on keyboards in your August issue. I own a Dvorak-style typewriter. Finest kind.

Finally, I hope that I will be seeing a lot of info in the coming issues on microprocessors. They are, from what I have seen, astounding.

Let me explain why they flabbergast me. One year ago, as a teacher, I attended a seminar on the new curricula for science. Along with some of the more ridiculous things which will, I fear, be foisted on our children in the future (imagine, if you will, the totally serious proposal of one curriculum that physics be taught by having the students write Japanese poetry!) was one system that would have students use an in-classroom computer. I knew nothing of computers at the time and that computer looked awfully impressive. It was as big as two suitcases. It cost better than $900.00. You needed at least two of the things to teach the class properly. It was an analog device which would, if you treated it properly, add voltages from two power supplies and display the results on an oversized voltmeter. For only $900.00. Now I find that there are digital devices available that are immensely better at a fraction of the cost . . .

Am looking forward to receiving my subscription. Keep up the good work.

Walter Norton
Nashville TN

OFF TARGET!

For the past few months I have noticed a fair number of letters on these pages from angry customers of Trigger Electronics. I would like to add my story to the long list of complaints, for the benefit of any others now facing this problem.

Last November I ordered several items for a fair amount of money and, hearing nothing after two months, I wrote them a polite letter asking about the delay. I got back a postcard saying that the goods would soon arrive. Still hearing nothing further after two more months, I called them and got the same response.

To make a very long story short, I wrote more letters and got a brush-off, after which I saw the letters in the June, '76, issue of *73* and followed some of their suggestions. I wrote to the FTC and got a polite brush-off. Then I went to the postal authorities with all the information. They immediately took it up and sent it on to the Postal Inspector, and there it has been bogged down for almost a month.

I would now like to request of anybody who has had trouble with Trigger that they, if possible, write me a letter telling me about it.

I suspect from the number of letters I have seen in *73* on this matter that there are many more who have complaints against Trigger. If enough people come forward, we could consider a class action suit against Trigger.

I hope this letter will appear in *73* and maybe help to clear up this situation.

To close this letter, I would just like to say that I enjoy this magazine and hope I do not again have need to take up space in this column for complaints.

Harold Chase WN1VVH
62 Pratt St.
Reading MA 01867

WHAT FUN!

I've never written a magazine before, as it takes a lot to make me write, but you have done it. Having been in CB for ten years, I know the joys of portable communication that walkie-talkies provide and the frustration caused by the lack of operation procedures by other CBers. I have been looked down on by other hams, and thought it unfair, but let it ride. None of them took the time to find out that I have an electronics background and that I knew about hams long before CB. Shortwave receivers and I have been friends for a very long time, with the ham bands capturing most of my attention and enjoyment. Then I discovered 100 mW walkie-talkies — boy, what fun! Biking, hiking, transmitter hunts and "rag chewing" with friends opened up a whole new world. Eventually I wanted more fun and more power, so I got a CB license in 1966. After a couple of years I gave up in disgust, sold all my gear, and let the license expire. In 1973, I renewed my CB license and purchased a 5 Watt walkie-talkie. Again, the fun and frustration. I told myself it was time to get my ham ticket, time to quit talking about that "someday," and do it. The code did not come easy for me, even though your "Novice" tape helped a lot. I planned on shipping right on to the General, but I couldn't seem to practice code regularly enough. I decided to take what I could get and got my Novice. After a 3½ month wait, my license came last week. Boy, what fun! I can't wait to get off work each night to get on the air. What a way to practice code! Those guys with the keys are more fun to practice with then the tapes.

Then I read your comments about deleting the Novice class! I for one will remember these Novice days with fondness. I don't consider myself a CBer gone ham — I don't like being that kind of statistic. First I am looked down on by hams for being on CB, and then I hear that to be a Novice is a waste to hamdom. Gee, I can't seem to win for losing.

Well, when I get to 14 wpm or so I am going to test for my Advanced . . . and settle for a General.

Thanks for a unique magazine that I enjoy so much.

William F. Stamps, Jr.
WN8ARZ/KWH7698
Sault Ste. Marie MI

BAD DEAL

I have a few things to get off my chest. First, I think that Docket 20777 is a bad, *bad*, deal. Docket 20777 won't hurt me, but it sure does bother me! If I ever get to 35 or 40 wpm I will feel ripped-off if I can't do it in the CW band. My first QSO, as a General, was on AM, and I didn't hear one garbage mouth. Also, AM might be almost dead, but why kill it?

I like your I/O section, even if I only fully understand the editorials. I think I am slowly but surely learning about microcomputers and, the more I understand, the more I enjoy the I/O section.

I for one enjoy CW, and in your September editorial, when you said that there wasn't a lot of CW activity,

you were wrong. The general CW band on 40 meters is very crowded at night.

I really enjoy your editorials, and I have had many pleasant experiences with your advertisers. Keep up the good work.

Penn McClatchey WB4DPT
Atlanta GA

STIMULATED

I am really interested in the computer aspects in relation to ham radio. I was getting a little bored with ham radio in general, and the computer articles and ads in your great magazine have stimulated my interest. I subscribe to about eight different radio and electronic and scientific type magazines — *73* is #1.

I also would like to comment about two of your advertisers, as many have done before me. Namely, S. D. Sales and James Electronics. Their *service* and prices can't be beat. They will have all my business.

Jack Ehrlich WA6ASQ
Eureka CA

ANGOLA ANGUISH

I have just returned from a two week tour of duty in Luanda, Angola. The company I work for has a contract with the government of Angola to install some communications equipment. I was over there checking out several of the transmitters to be used in the system.

While I was there, I was told about the following incident. Near our warehouse on the outskirts of Luanda is the site of a very interesting ham station. This station had the most beautiful dish and helix antennas you would want to see. The chap who had spent his whole life building up this fine station was CR6CH, Sr. Carlos M. Bettencourt. Well, when the change in government came to pass recently the Cubans came in and stole all his equipment they could cart off. The dish and helix antenna are still there, but that is about all. Then about three weeks ago "bandits" broke into his house and murdered him. That is the "official" explanation. No one believes that story, though. As far as I was able to determine, there are no hams active in Angola legally at this time. The country designation has been changed from a CR6 to D2 . . . but no hams could I find. I don't blame them, considering "bandits" on the loose!

So much for Angola. Now that I have returned home from that long trip I plan to get at it again and do some more experimenting with my microcomputer and put it on the air with my station. Will write up my experiments and send them to you for possible publication . . . back to the workbench . . .

Louis I. Hutton K7YZZ
Bellevue WA

QUALITY

Enclosed is a check in the amount of $10.00 for a 1 year subscription to *73 Magazine*. While I have little active interest in the hobby of amateur radio, I find your new computer columns and articles to be of excellent quality and contain more good technical information than is available from any other source — not to mention the best selection of computer equipment advertisements of any magazine around.

Robert H. Lyons
Lansing MI

BUG II

Please note the following corrections to my article, "500 MHz Scaler" (October, 1976, page 62): 1) the CE output of the 11C90 is at pin 1, while that for MS is at pin 14; and 2) the unlabeled capacitor on the component layout should have a value of 10.

Peter Stark K2OAW
Mt. Kisco NY

KENSCO CARES

Thought I would write you and tell you about one of your advertisers, Kensco Comm. of Quincy, Mass.

I had bought 2 sets of xtals from them and used them on my mobile and home 2 meter rig. Then the guys who own one of the local repeaters, because of some 3rd order intermod, decided to change frequency. I figured I was out $20 for the 4 xtals, having none for the new frequency. So I write to Kensco and they came back with a very interesting policy: "If you bought xtals from them, you can exchange them with Kensco for any other ones you may want at no charge."

How about that for a policy? If Kensco would allow you to mention this policy in your magazine, it would be giving the ham who buys from them a break.

Jim Dates W2QLI
Corning NY

BUG III

Just returned from an extended vacation (cum job-hunting expedition) and, after sorting through about 10 pounds of mail, I came across a letter (read plea for help) from Bob Brown WA6ZKI in Long Beach, California. The poor guy read my article on the soldering iron holder in the July issue of *73* and decided it was just what he needed, so he built it exactly as shown and wired it in accordance with the published diagram. To make a long tale even longer, it didn't work right and he couldn't figure out why. I dug out the original copy and checked my pencil drawn diagram against the one on page 18, and, lo and behold, there is a small but oh-so-significant typo. The original shows a connection between the lead from SW3 and 4 to the lead from SW1 and the green pilot light to D1. There should have been a connection dot where those lines cross — and there ain't no such animal. No wonder the poor guy couldn't get it working right. I sent him a correction and hope that you can publish one also, before too many guys think that this is just another cloonge article.

Arny Cain WB4FDQ
Melbourne FL

CAPITOL QSOs

With interest I read your editorial on page 4 of the July, 1976, *73*, a portion of which concerned the use — or nonuse — of bicentennial callsigns. Certainly it is in the great American tradition of freedom that each individual amateur operator is allowed to independently decide whether or not to use the optional identification. Your readers may be interested to learn that we at the Capitol Hill Amateur Radio Society confirm AC3USS QSOs with a special three color QSL.

The card depicts the "East Front of the Capitol of the United States as originally designed by William Thornton — and adopted by General Washington — President of the United States." It looks quite different today, having been added to and modified several times. Visitors to the Capitol may view a history of the Capitol's physical evolution in the "crypt." The drawing reproduced on our QSL card is in this exhibit.

There is quite a history behind Dr. Thornton, the Capitol's architect (today the architect of the Capitol — an appointive office — oversees the structural and mechanical care of the Capitol and associated buildings and grounds). Thornton was a medical doctor and inventor whose major amateur architectural project seems to have been designing our Capitol building. Even though he missed the deadline for the design competition, his drawings were accepted. Both George Washington and Thomas Jefferson liked his plans and he won. His prize? Five hundred dollars and a lot in the then brand-new (and quite muddy) City of Washington.

AC3USS operates from the Senate Office Building on the Capitol grounds. Over one half of the Senators and many committees have their offices in the same building (and are thus susceptible to our RFI). The station is entirely financed from the private funds of members and began operation in 1969. It was, according to the Capitol Hill Historical Society, the first recorded amateur radio station operated from the legislative branch of government. Up to one kilowatt of power is used on 160-10 and 2 meters to contact hams around the nation and around the world from this historic landmark and institution.

David R. Siddall WA1FEO
Washington DC

RAMSEY RECOMMENDED

Kudos for Ramsey Electronics of Rochester NY, an advertiser in *73*. John Ramsey and his wife were exhibitors at the ARRL Atlantic Division Convention in Philadelphia on July 23-25. I purchased a fantastic little 6-LED clock which didn't work due to a couple of solder bridges I had added but didn't find. John straightened the problem out in a couple of minutes at no charge. Very friendly and personable with all who came to his booth. I'm sure the firm will do quite well and I recommend Ramsey Electronics without reservation.

Thomas R. Sundstrom WB2AYA
Willingboro NJ

1000%

I just wrote to say again keep up the good work. Your magazine gets better all the time. One thing I miss is the Solid State column by Waller Scott. It had lots of interesting things in it. I enjoyed it because it kept me up-to-date on new transistors. Please bring it back. Also, I miss the repeater updates that you had so often.

As you always say, the *73* code tapes are really great. I know in our area they are used to train many Novices and people that want to update for a higher class. Several people that got the *73* tapes said that they never knew how easy it is to

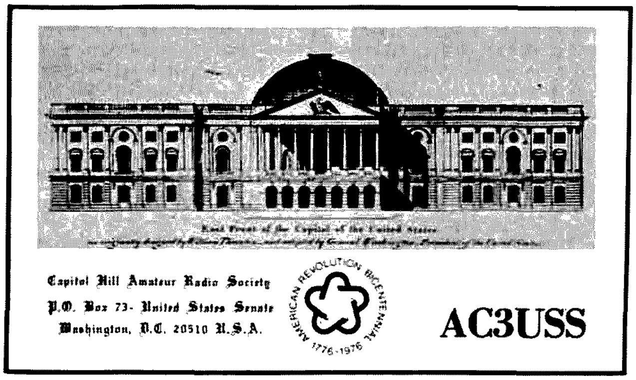

learn the code. Learn it at 13 wpm once and be done with the hump and all the frustrations that go with it.

I believe that you are doing the ham radio fraternity a great service by selling these tapes at such a low price. I know that they have helped many new hams get started. They really are revolutionary in their methods and speed of learning for the student.

Keep fighting Ma Bell, too. She rips us all off! I don't know what she did to *Telephone Electronics Line*, but the magazine must have gone under because I get no more copies and have written them several times with no reply. I did get a notice from Pacific Bell sent to all subscribers not to use any information in the magazines. I don't know what gives Ma Bell or anybody else the right to censor the press so it can't print information on it, but if it can, then we are ruled by the big corporations.

We need more men like you, Wayne, to wake people up before it is too late and we are no longer free. I know we are not free now, but slowly but surely 1984 will really be with us with Big Brother at the controls and us just puppets.

Keep fighting the ARRL too, because they are against progress (or so it seems to me), and let's get some new blood in the ham ranks that will stand up to get more frequencies for our bands. We could sure use them, as many of them lie fallow. Used only by the government occasionally. We could put them to better use!

I am with you 1000%, Wayne. Keep *73*'s high standards up there.

Pete Hons W3PKH
Portage PA

WATCHING BELLE

Student amateur radio operators, members of Maple Hill High School's Amateur Radio Club, WB2YCR, stood hurricane watch at their home stations during Hurricane Belle's recent visit to our area. Alerted by telephone, each student monitored special emergency net frequencies on receivers at their home stations. On these nets, the students learned by listening to actual emergency net procedures, information bulletins on damage and evacuations, and "traffic" or message-handling techniques. Most of the student operators listened to the Red Cross Emergency East Coast Net run by station W1KBN in Boston. Others monitored state nets in New Jersey, Pennsylvania, Delaware, Connecticut, Massachusetts, New York, and New Hampshire.

Students also copied detailed information on the storm's progress from station WWV, run by the National Bureau of Standards. These bulletins gave the storm center's location in longitude and latitude, its wind speed, direction of movement, and other vital data. Using skills learned in Geography class and maps from local gas stations, they plotted the storm's progress from Cape Hatteras into New England. In this way, they were able to utilize their home stations, their radio skills, and their geographic knowledge in a useful and exciting way.

John Kienzle WA2UON
Castleton NY

OFF TARGET II

As a subscriber to your fine magazine, I've seen your comments on Trigger Electronics.

I recently received my Novice license and, with it, a batch of advertisements with mailing labels distributed (sold?) by the FCC. One such advertisement was from Trigger Electronics, a catalog. The catalog was full of such bargains, that, forewarned by letters in *73*, I took a second look. What I found was a catalog printed in 1973. It was mailed to me in June, 1976.

I wish to bring this to your attention and, hopefully, keep some new ham from making a bad mistake.

Thomas G. Vavra WN8ZRL
Fairborn OH

THE CAUSE OF IT ALL

Well, you're the cause of it all! Your I/O articles got me hooked on this computer business, and now I'm knee deep in it. I've been going to a microcomputer class given by the "Byte Shop" here in Santa Clara, and, besides learning a lot, I've found that most computer hobbyists aren't all that familiar with ham radio and *73 Magazine* in particular. There is a definite crossover point in the technology, and the two fields certainly complement each other. Take, for instance, the use of ham AFSK tones for digital data recording vs. the KC standard (with all due respect to your trip to Kansas City). The baud rate using our standard tones can be much faster than the KC standard. The point is, the technologies cross, and systems that we consider "run of the mill" can be a godsend to computerists. I've done my bit as far as informing the local group as to what *73* has to offer, but there must be some way to let the computer hobbyist audience know the advantages ham radio has to offer.

Your idea of making cassette tapes available with computer programs is outstanding. My entrance into the computer field was via MOS Technology's KIM-1 CPU board. One of the main reasons I purchased this board was the on-board cassette interface. KIM-1 does not use the KC standard, but it is an excellent interface system and may be recorded on normal cassettes. This could be a starting point for your software distribution system, and I'd really like to see this happen. A gentleman in San Jose is just finishing a 2K Tiny BASIC for KIM, and I'll contact him when he's finished to let him know about your distribution, royalties, etc. I'd like to see a good software distribution for KIM, since the 6502 is a really nice CPU.

Bob Grater K6SUB
Santa Clara CA

DOWN TO REAL GOOD

How about some articles for the ham that do not have anything about them except that they are expensive?

Super great magazine, except for those I/O articles – they cut it down to real good.

Well, 73, and thanks for the good magazine.

Curtis Junck WBØJYF/6
Fair Oaks CA

BUG IV

Concerning the article on the "TT Pad for the Wilson HT," July, 1976, I have found that the part number given for the Motorola belt clip is the number stamped into the plastic, but the parts catalog lists this part as #1-84206D81 and sells for $3.50. I ordered mine through the local Motorola shop and, sure enough, this was the number on the plastic bag the part came in. Hope this info helps those who want a good belt clip for their HT.

Harold C. Hageman WA5FCV
El Paso TX

REJECTION REJECTED

I rejected *73* earlier this year, as I subscribed to *QST* and *HR*. Last week I borrowed a copy of your June issue from K4FTY and realized I should have subscribed.

Michael E. Casciolo
K1DZH/WB4DOD
Huntsville AL

HATS OFF

Listening to WB4GLG in Kentucky working on the hurricane watch net was not only refreshing but truly exhilarating. Being a 4 year vet of CB and seeing how "good buddies" spend most of their time arguing about whose "channel" it is and whose mike is splattering who, it was good to hear him (and the countless others) really putting their all into helping those in need.

I myself have to say "hats off" to those involved in the net helping others. And to the few idiots on the band – may the short circuits of a thousand Hurricane "Belles" invade their shacks, along with the FCC with their axe.

I am working to get my Novice, then General, ticket in the near future (January, hopefully), the Good Lord and FCC willing. Looking forward to talking to all of the great people in the world of radio and handing them the respect they very much deserve.

John P. Keefe
Waterford NY

P.S. My first issue of *73* was the September, 1976, one. That is where I read of the net and found out about it. It will become #1 in my magazine library, as I won't miss any coming issues. Just got started with a 101-B – a few kft of wire. Who said all CBers were clowns?

BLESS TRUCKERS

I find it amusing to read letters that you have printed, written by hams, that castigate you for advertising CB radio and advocating recruiting future amateur operators from the ranks of CB operators. Personally, I agree with your stand on the subject. CB has grown up quite a bit since the fuel crunch and the advent of the 55 mph speed limit. CB radio has its place in the overall scheme of communications.

For instance, when I travel, I have a CB, a 2m amateur FM rig, and my "company" radio in the car. I work for a large governmental public safety communications agency, and thus have the 24-hour-per-day services of a public safety dispatcher available at the push of a mike button. And, since our agency uses multiple high level repeaters, I can contact the office over much of central California.

Most hams wouldn't scoff if I happened to report some sort of emergency over the company radio, yet these same hams would look at me funny if I reported this same emergency to the West Dismal Seepage REACT on channel 9. They also would probably think that familiarity with the 10-code on a public safety frequency is the mark of the professional, but if I should use that same radio code on CB I would be branded a nerd – or worse.

CB radio lets me talk to my lady legally, without her having to become technically oriented or take any test. When we visit her family on the north California coast, CB is virtually the only communications we have. There are few hams up there on 2 meters, but there are plenty of CBers.

On the highway, my little 11 meter rig has paid for itself over the past year by helping me avoid speeding tickets with their attendant fines, not to mention the insurance premium increases. When the speaker spats out, "Break for that Southbound, you got a Smokey on your back door," it's just natural to back down to "double nickels." Bless the truckers. They have set up a really efficient communications system.

The CBers I've met on the road are, for the most part, every bit as friendly as the hams I ran into fifteen years ago when the ink was still moist on my new license and I hesitated before entering a club meeting of electronic

supermen. The Marin Amateur Radio Club of Novato treated me wonderfully and made me feel at home, even though I had a Technician license and couldn't operate on the "club" frequency of 3885 kHz. They encouraged me to write a VHF column for the club paper, and to set up the VHF stations for field day. I felt appreciated, and it was great. If ham clubs made newcomers feel at home, welcome, and "proud to have ya here, Podner (with a capital P)," I feel that the ranks of amateur radio would swell visibly. People are insecure in strange surroundings, and a neophyte ensnarled in a snobbish ham club meeting will probably leave, disillusioned, and take up photography, sky diving, or some such. If I had been treated discourteously during my early days as a ham, I never would have pursued the hobby. I feel that most folks feel the same way. No one enjoys being made to feel stupid or inadequate.

Another thing to remember: A CBer (or other person who has not been initiated into the world of electronics) can *never* ask a stupid technical question. Be patient. If they knew as much as you do, they'd have a ham ticket. But they're just starting out, just as you and I did many years ago. They don't have the amateur license or skills, or a commercial radiotelephone license. CBers appreciate patient, detailed, simple answers to their queries. Don't try to snow them with your great knowledge — *help* them with it. Be sure that they understand what you are telling and showing them. While you're at it, show them amateur radio, and how easy it really is to get started. Chances are, you'll have a new recruit for the amateur ranks. But if you ridicule him, and make him feel so low that a snake wouldn't have to step high to get over him, don't expect him to be enthusiastic about getting into amateur radio. No man goes readily where he feels outcast before he begins.

Thanks for taking the time to read this letter. You have my permission to line the bottom of the birdcage with it.

I am enclosing a check to cover the cost of the 14 wpm code cassette and the Advanced Class license study manual. After 15 years as a Technician licensee, I have decided to go for the biggee. And, as a lifetime 'scriber, let me add, Keep It Coming. Your publication is the best I've seen in the field.

Alan Christian WA6YOB
San Jose CA

BUG V

I have found an error in my article in *73*, April, 1976, p. 55, "One IC Tone Burster." Here's the change.

The emitter and base of the NPN xstr are switched; the amp is common *base*, not common *emitter*.

Lhary Meyer WB6ZMA
Fairfax CA

ATLAS ANSWERS

A little experience you might get a kick out of happened just recently. I got a great buy on an Atlas 210x from a dealer who picked it up from a CB dealer on a bad debt. Lo and behold, it had on the dial and on the freqs the 11 meter band all marked out as pretty as can be. And, of course, with 200 Watt input.

A letter to Atlas complaining about this setup brought a quick telephone call from the California firm with the information they did not put this rig out in that condition and they had encountered this before. They kindly sent me a new dial and a little tweaking brought it back on 10 meters. Incidentally, that is one helluva rig and every mobile HFer should have one.

Wm. R. Doctor WA9QJQ
Angola IN

OFF TARGET III

Concerning "Another Shooting Victim" and Trigger Electronics, River Forest, Illinois:

My advice to all the amateurs out there who are waiting and waiting is that a few complaints to the postal authorities will straighten out Mister Trigger pretty quick. The Post Office is very eager to go after people like that.

The August issue of *73* is the first one for me and it looks like a very interesting magazine. I'm sure I will enjoy it for many years to come.

Gerald Greenwood WB9SWA
Chicago IL

MISSED

Hermann Kortbus WA2LWK was killed today in a car accident. Many hams will miss his schedules, help and friendliness. Hermann had his 60 ft tower and 4 el quad ready to put up, but he never got to it.

Kurt Bittmann WB2YVY
Centereach NY

SHOCKED

September '76 *73 Magazine* arrived today. I am shocked to learn that FCC Docket 20777 is so restricting, especially since "de-regulation" is supposed to be the FCC's new motto.

It seems to be another case of a government bureau pushing the citizens around — like auto seat/strangle belts and inflatable cushions — motorbike helmets — father-son/mother-daughter banquets, and so on — including confiscatory taxes.

Your comment in "Never Say Die" regarding opening up the bands: Any mode anywhere sounds excellent and makes good horse sense. The bureaucrats and the ARRL will hate you and villify you for it, but I love you for it.

Paul L. Schmidt W9IDP
Bloomfield IN

U-HUM

It seems that every simple QRP rig is meant for 40 meters. I wish someone would design a simple transmitter (with a complete parts list) for the 15 or 10 meter Novice bands.

The only thing I have against 40 meters is all those u-hum foreign stations. It's almost impossible to find a section of the band that's clear.

Whoever had the idea of combining broadcasting and amateur stations is off his or her rocker!

I'm 14 years old, and am waiting for my Novice test to arrive.

John Halliwell
Hampton TN

P.S. This letter was inspired by your editorial in the July issue of *73*. I hope it meets your standards of complaining.

ANTI-73?

Having been a member of the ARRL for two years, I was never exposed to the "other side" of ham radio — that is, until a friend gave me a couple of back issues of *73*.

Now a subscriber, I find *73* an entertaining as well as useful magazine. However, I have a few suggestions which I think would make a good thing better. First (and most annoying), is the fact that you rarely (if ever) publish an anti-*73* letter in your "Letters" column (and don't tell me there aren't any!). Even *QST* has one or two anti-ARRL letters in their correspondence column — even though they obviously disagree. Sincere negative criticism is a useful tool — and should be voiced.

Another problem is one you rightly accused *QST* of — too technically-oriented copy. Lately, *73* has more closely resembled an RCA TTL manual than a ham magazine — how about some basic projects?

One thing which I was at first opposed to, but later very much pleased with, is the I/O section. Although some articles are out of my reach, *73* has effectively introduced me to microprocessors which I soon hope to become involved in.

Another advantage of *73* over *QST* is *73*'s lack of dull columns of call letters, contest results, "News and Views," etc. *QST* wastes half an issue each month on this. Ugghh!!

As far as *QST* goes, I find it a worthwhile magazine because it gives current news, has some basic and practical articles each month, has want ads, and is published by the ARRL, which, although it is not the best organization and is not totally agreeable with my views, is still worthy of my support.

So, all in all, I think I speak for at least a few hams when I say *73* and *QST* are both good and worthwhile magazines, and contribute to the safe growth and support of our hobby.

Brian Rackham WA7ZHJ
Scottsdale AZ

P.S. Notice how I didn't even bring up the fact that *73* has published CB ads (a commercial sellout?) and *QST* hasn't. And notice how I didn't mention how, as you stated, "informing CBers is our duty as hams." I didn't say, "no, it isn't — it is our duty to convert CBers to ham radio?" Don't worry, I won't say it.

Well, Brian, I've been reading QST *for over 40 years now . . . it's okay. Regarding anti-*73 *letters . . . yes, we got one last month . . . it wasn't very interesting. — Wayne.*

OFF TARGET IV

Just a quick note to tell you guys what a great magazine you put out.

Now that I've got your attention, I also want to complain about Trigger Electronics. 7 weeks ago I ordered two measly Novice band crystals for $6.30. According to my canceled check, they cashed it 3 days later and I haven't heard from them since. After phone calls and letter writing, I finally had to go to the Better Business Bureau. It would have been quicker to have my local supplier back order it from the factory. Fine way for a new Novice to start out — shining new equipment and no crystals. Oh, well.

Keith Payea WN1WWX
Fitzwilliam NH

STUCK UP

I am glad to see all of the ham magazines finally covering the CB scene. I cannot say that I am in total favor of CB, but I see the need for it and understand the reason for its popularity.

I have had a CB license since 1961, obtaining my amateur license in 1965 and FCC Commercial license in 1968. I will not in any way have a CB rig in my house, but on the other hand I go nowhere in my auto without one.

On a recent 5028 mile trip from the west coast back east and back through the northwest, I became more convinced that the majority of hams are stuck up. I met very helpful hams in all states, especially Denver, Salt Lake, Oklahoma City and Phoenix. However, in general they wouldn't even talk. In many cases, QSOs on a repeater would stop, and then several minutes later I would hear, "Well, guess that 'nut' is gone — now we can continue." The number of closed repeaters is amazing.

On the other hand, I never met an unfriendly CBer. Some rough language many times, but at least an answer.

Also, there is always someone mon-

Continued on page 18

Editor:
Robert Baker WB2GFE
15 Windsor Dr.
Atco NJ 08004

CONTESTS

IARS/CHC, FHC, SWL-CHC, HTH QSO PARTY

Starts: 2300 GMT Friday, November 5
Ends: 0000 GMT Monday, November 8

An SASE to K6BX will bring more detailed information. Contest is open to all amateurs and SWLs worldwide. Same station may be worked on each band and mode; SSB and AM are different modes.

EXCHANGE:

QSO Nr., RS(T), name, CHC/FHC Nr., US state and county or similar division. Non-members send "HTH" instead of CHC/FHC nr.

SCORING:

For CHC – 1 point per QSO with other CHCers, 2 points if HTHer, and 1 additional point if YL, B/P, FHC, Novice, CHC-200, Merit or Club station, or if on VHF/UHF. Double above points if QSO is out of own country. For HTH – contacts with other HTHers count 1 point, with CHCers count 3 points. Rest same as above. For SWL – use same as above depending on whether CHC or not.

MULTIPLIERS:

Each different continent, country, ITU zone and US state (counted only once).

FINAL SCORE:

Multiplier times total points is final score. Multi-operator stations divide score by number of operators.

FREQUENCIES (for US and DX as allowed):

CW: 3575, 3710, 7070, 7125, 14075, 21075, 21090, 21140, 28090, 28125.

Phone: 3770, 3775, 3790, 3943, 3960, 7070, 7210, 7260, 7275, 14320, 14340, 21360, 21440, 28620, 50.1-50.5, 145-147.

AWARDS:

Hundreds of certificates and trophies in all categories and divisions are awarded. An SASE will bring further information. Send all requests and logs to: International Amateur Radio Society K6BX, PO Box 385, Bonita CA 92002. Logs should be mailed within 15 days after the close of the QSO Party.

RSGB 7 MHz DX CONTEST
Phone

Starts: 1800 GMT Saturday, November 6
Ends: 1800 GMT Sunday, November 7

EXCHANGE:

Report and serial number, starting with 001.

SCORING:

Non-British Isles stations score 5 points for each contact with the British Isles; those outside Europe score 50 points. All may claim a bonus of 20 points for each British Isles numerical prefix worked (G, GC, GD, GI, GM, GW – 2, 3, 4, 5, 6). Contacts with stations using GB prefixes will not count for bonus points.

AWARDS:

Non-European stations must make at least 10 QSOs to qualify for an award.

LOGS:

Logs and entries must be addressed to the HF Contests Committee, c/o J. Bazley G3HCT, Brooklands, Ullenhall, Solihull, West Midlands, England, to arrive no later than December 29th.

CALENDAR

Nov 5 - 8	IARS/CHC/FHC/HTH QSO Party
Nov 6 - 7	RSGB 7 MHz Contest – SSB
Nov 6 - 8	ARRL Sweepstakes – CW
Nov 9 - 10*	YL Anniversary Party – Phone
Nov 13 - 14	European DX Contest – RTTY
Nov 13 - 14	Delaware QSO Party
Nov 13 - 14	Missouri QSO Party
Nov 14	International OK DX Contest
Nov 20 - 22	ARRL Sweepstakes – Phone
Nov 20 - 21	All Austrian Contest
Nov 27	10 Meter Ground Wave Contest
Nov 27 - 28	CQ Worldwide DX Contest – CW
Dec 4 - 5	ARRL 160 Meter Contest
Dec 4 - 5	TAC Contest
Dec 11 - 12	ARRL 10 Meter Contest
Dec 31	Straight Key Night
Feb 19 - 20	YLRL YL-OM Contest – Phone
Mar 5 - 6	YLRL YL-OM Contest – CW
Apr 12 - 13	YLRL DX-YL to Stateside YL Contest – CW
Apr 26 - 27	YLRL DX-YL to Stateside YL Contest – Phone

* = described in last issue

ARRL SWEEPSTAKES
CW

Starts: 2100 GMT Saturday, November 6
Ends: 0300 GMT Sunday, November 8

Phone

Starts: 2100 GMT Saturday, November 20
Ends: 0300 GMT Sunday, November 22

Sweepstakes is sponsored by the ARRL and is open to all amateurs in the US, US possessions, and Canada. No more than 24 hours of operation are permitted during the 30 hour contest period. Time spent listening counts as operating time and OFF periods may not be less than 15 minutes. Times on and off as well as QSO times must be entered in the log. Each station may be worked only once, regardless of band.

CLASSES:

All entries will be classified as either single or multiple operator stations. Single operator stations will be further classified by input power: Class A = 200 Watts dc or less, Class B = above 200 Watts. All ARRL affiliated clubs may also participate in the club competition.

EXCHANGE:

Number, precedence, your call, CK and ARRL section. Send A for precedence if power is 200 Watts dc or less, otherwise send B. For CK, send the last 2 digits of the year you were first licensed.

SCORING:

Score 2 points for each completed QSO. Final score is sum of QSO points multiplied by the total number of ARRL sections plus VE8 (max. 75).

AWARDS:

Certificates will be awarded to the highest scoring Class A entry and the highest scoring Class B entry in each section, provided there are at least 3 single operator entries or the score is 10,000 points or more. Certificates will also be awarded for high scoring Novices and Technicians. Multi-operator entries are not eligible for certificate awards and will be listed separately in the results.

FORMS:

It is suggested that contest forms be obtained from ARRL, 225 Main St., Newington CT 06111. All entries with 200 or more QSOs must have a cross-check sheet to check for duplicate QSOs. Each log must show date, QSO time, times on/off, exchanges sent and received, band and mode.

Note: These rules were taken from last year's contest.

EUROPEAN DX CONTEST
RTTY

Starts: 0000 GMT Saturday, November 13
Ends: 2400 GMT Sunday, November 14

Rules for the contest are the same as for the Phone section, with one exception: In the RTTY section, contacts with one's own continent are permitted and count 1 point per QSO. Multipliers will be counted as before.

Complete rules appeared in the August issue on page 11. Briefly, the basic rules are as follows:

Use all bands 3.5 through 28 MHz, with only 36 hours of operation out of the 48 hour contest period for single operator stations. The 12 hour rest period may be taken in up to 3 periods. Classes include single operator (all band), and multi-operator with single transmitter.

EXCHANGE:

RST and progressive QSO number starting with 001.

SCORING:

Each QSO will count 1 point. A station may be worked once per band. Each QTC (given or received) counts 1 point – see August issue. The multiplier for non-European stations is the number of European countries worked on each band. Europeans will use the ARRL countries list. In addition, each call area in the following countries will be considered a multiplier: JA, PY, VE, VO, VK, W/K, ZL, ZS, UA9/UAØ. The multiplier on 3.5 MHz may be multiplied by 4; the multiplier on 7 MHz may be multiplied by 3; the multiplier on 14/21/28 MHz may be multiplied by 2. The final score is the total QSO points plus QTC points, multiplied by the sum total multipliers from all bands.

AWARDS:

Certificates to highest scorer in each country, reasonable score provided. Continental leaders will be honored. Certificates will also be given to stations with at least half the score of the continental leader.

LOGS:

Use a separate log sheet for each band. Logs for the RTTY section should be mailed no later than December 1st. North American stations may send their contest logs to: H. E. Weiss WA3KWD, 762 Church St., Millersburg PA 17061, USA. All others should send their logs to: WAEDC – Committee, D-895 Kaufbeuren, Postbox 262, Germany.

DELAWARE QSO PARTY

Contest periods:
0001 to 0600 GMT & 1600 to 2200 GMT November 13
0001 to 0600 GMT & 1600 to 2200 GMT November 14

This year's Delaware QSO party is sponsored by the Delaware Amateur Radio Club, W3SL. Stations may be worked once per band, per mode for QSO points.

EXCHANGE:

Delaware stations will send QSO number, RS(T), and county. All others send RS(T), ARRL section, or country.

FREQUENCIES:

CW: 3560, 7060, 14060, 21060, 28160.

Phone: 3975, 7275, 14325, 21425, 28650.

Novice: 3710, 7120, 21120, 28160.

SCORING:

Delaware stations score 1 point per QSO multiplied by the total number of sections and countries worked. Outside Delaware score 5 points per DEL QSO times 1 for one county worked, 3 for two counties worked, or 5 for all three DEL counties worked (DEL counties = Kent, New Castle, and Sussex).

ENTRIES AND AWARDS:

Appropriate awards will be given along with a certificate for working all three DEL counties. Mailing deadline is Dec. 31, 1976. Send logs to John Low K3YHR, 11 Scottfield Dr., Newark DE 19713. Include an SASE for results or the W-DEL award.

MISSOURI QSO PARTY

Starts: 1800 GMT Saturday, November 13
Ends: 2300 GMT Sunday, November 14

The 13th annual QSO party is sponsored by the St. Louis Amateur Radio Club in an effort to activate some of the hard to get Missouri counties. The same station may be worked once per band and mode. Missouri mobiles will count separate from each different county.

EXCHANGE:

QSO Number, RS(T), and QTH; county for MO stations; state, province, or country for others. MO mobiles start with #1 from each county activated.

FREQUENCIES:

3540, 3910, 7040, 7240, 14040, 14280, 21110, 21360, 28110, 28600, 50-50.5.

SCORING:

Score 1 point per QSO; MO stations multiply contact points times number of states, provinces, and countries; others multiply by number of MO counties (115 max). MO mobiles total separate score from each county activated.

AWARDS:

Certificates to top scores in each state, province, country, top 10 MO entries and top 3 MO mobiles.

ENTRIES:

Mailing deadline for logs is December 15th. Address all entries to: St. Louis ARC – KØLIR, 842 Tuxedo Blvd., Webster Groves MO 63119. Include an SASE for results.

INTERNATIONAL OK DX CONTEST

Starts: 0000 GMT Sunday, November 14
Ends: 2400 GMT Sunday, November 14

The participating stations work stations of other countries according to the official DXCC Countries List. Contacts between stations of the same country count only as a multiplier, but Ø points. All bands from 160 to 10 meters, CW and phone may be used. (OK stations are only licensed to operate CW on 160 meters.) Crossband as well as cross-mode contacts are not valid.

EXCHANGE:

Exchanges consist of a 4 or 5 digit number indicating the RS(T) and ITU zone.

SCORING:

A station may be worked once only on each band. A complete exchange of codes counts one point, but three points for a complete contact with a Czechoslovak station (except as noted above for stations in the same country). The multiplier is the sum of the ITU zones from all bands. Final score is then the sum total of contact points times the multiplier.

CATEGORIES:

A – single operator, all bands; B – single operator, one band; C – multioperator, all bands. Any station operated by a single person obtaining assistance, such as in keeping the log, monitoring other bands, tuning the transmitter, etc., is considered as a multi-operator station. Club stations may work in category C only.

AWARDS:

A performance list of participants will be worked out by the contest committee for each country. A certificate will be awarded to the top scoring operators in each country and each category. The "100 OK" award may be issued to stations for contacts with 100 Czechoslovak stations, and the "S6S" award (and/or endorsements for individual bands) may be issued to a station for the contacts with all continents. Both awards will be issued upon a written application in the log. No QSL cards are required for either award.

LOGS:

A separate log must be kept for each band, and must contain date and time in GMT, station worked, exchange sent and received, points (Ø, 1 or 3), and ITU zone (with the first QSO for that zone only). The log must contain in its heading the category of the station (A, B or C), name and callsign, address and band or bands. Also, indicate the sum of contacts, QSO points, multipliers and the total score of the participating station. Each log must be accompanied by the following declaration:

I hereby state that my station was operated in accordance with the rules of the contest as well as all regulations established for amateur radio in my country, and that my report is correct and true to the best of my belief.

Logs must be sent to The Central Radio Club, Post Box 69, Prague 1, Czechoslovakia – postmarked no later than December 31, 1976. A list and map of ITU zones is available for 2 IRCs from the same address.

ALL AUSTRIAN CONTEST

Starts: 1900 GMT November 20
Ends: 0600 GMT November 21

RESULTS

RESULTS OF 1975 TOPS CW CONTEST

The top 10 scorers of a field of 173 are shown below. It is interesting to note that W1SWX was the only US station listed anywhere in the results – he finished 6th.

G3FXB	111,500	W1SWX	63,712
LZ1SS	107,863	YU3TJA	62,315
HA9RU	79,461	DL1BU	61,152
XN1KE	72,874	OH1LA	53,912
OK2BPO	71,295	DM3YBF	50,687

The contest is open to all amateurs; power input must be in accordance with licensing regulations. All contacts must be on 160 meters, on CW only. Foreign stations use the call "CQ OE," Austrian stations will use the call "CQ TEST." The authorized suballocations for Austria are: 1.823-1.838, 1.854-1.873, 1.873-1.900 MHz.

EXCHANGE:

RST and QSO number starting with 001. Each exchange must be confirmed by repeating the exchange code.

SCORING:

Every completely logged QSO (date, time in GMT, frequency in MHz, call of station, exchanges given and received) counts one point. Multipliers are 2 points for every Austrian "Bundesland" (OE 1 – 9), and one point for every prefix. Multiply QSO points times multipliers for final score. Every station can be contacted only once. If a station is contacted twice, the second QSO must be clearly marked as a duplicate and does not count.

ENTRIES:

Logs must be postmarked no later than December 15th and sent to: Landesverband Salzburg des OVSV, "AOEC 1976," c/o Ing. Wolfgang Latzenhofer OE2LOL, Pfeifferhofstrabe 7, A-5020 Salzburg, Austria.

10 METER GROUND WAVE CONTEST

9 pm to 1 am local time, November 27

This is the 24th annual contest sponsored by the Breeze Shooters of PA. All modes are permissible with points determined on a distance and input power basis. Separate awards for leaders in four circular zones centered on downtown Pittsburgh PA. Mobiles and Novice/Technician also compete for separate awards. Logs must be postmarked no later than December 6th. Log sheets and complete rules are available from Richard Evanuik WA3LUM, 311 Evergreen Ave., Pittsburgh PA 15209.

CQ WW DX CONTEST – CW

Starts: 0000 GMT Saturday, November 27
Ends: 2400 GMT Sunday, November 28

The contest is open to all amateurs and all bands. 160 to 10 meters may be used. Stations are permitted to contact their own country and zone for multiplier credit. The *CQ* Zone map, DXCC and WAE country lists, and WAC boundaries are standards.

CLASSES:

Single Operator – single or all band; Multi-Operator – single or multi-transmitter (all band only). Also, club competition.

EXCHANGE:

RST and Zone.

SCORING:

Contacts between stations on different continents count 3 points. Contacts between stations on the same continent but different countries count 1 point. For North America stations only, contacts between stations within NA count 2 points. Contacts between stations in the same country are permitted for multipliers but do not count for QSO points. The multiplier is the total number of different zones and countries worked on each band. Final score is the sum of QSO points times the total multiplier.

AWARDS:

First place certificates will be awarded in each class in every participating country and in each call area of the US, Canada, Australia, and Asiatic USSR. Final results will be published in *CQ*. To be eligible for an award a single operator station must show a minimum of 12 hours of operation. Multi-operator stations must operate a minimum of 24 hours. A single band log is eligible for a single band award only. Second and third places will be awarded if warranted. There is also a long list of trophies that will be awarded.

LOGS:

All times in GMT. Indicate zone and country multipliers only the first time worked on each band. Check for duplicate QSOs and correct QSO points and multipliers. Use a separate log sheet for each band. For official logs, summary sheet, and zone maps, send a large SASE to: *CQ* WW Contest Committee, 14 Vanderventer Ave., Port Washington, L.I., NY 11050.

Logs should be postmarked no later than one month after the contest and should be sent to the address above. Indicate phone or CW on the envelope.

Note: These rules were taken from last year's contest.

LETTERS

from page 15

itoring the CB channels, where, even though I could raise a repeater at all times on the trip, 9 out of 10 times no one was around. Of course, the number of CBers vs hams accounts for this.

I feel the problem with the ham ranks is the typical ham who looks down on the CBer. Here at Norton AF8, San Bernardino, California, we have combined the amateur radio club, CB radio club and MARS support group. Since the CB club's start in March, 1976, approximately 30 CBers have gotten their ham tickets. Most CBers want ham tickets to get off the crowded CB bands. They need the help of a few amateurs to do so.

I hope more amateurs will help, because if they don't, the ham bands will become CB bands when the Communicator licenses are granted, if these CBers are not properly trained. As an added note, in this area 1 of 4 CBers also holds an FCC Commercial license, where it's lucky to find 1 in 25 hams with a Commercial ticket. I realize this is a special group of hams and CBers on a military installation, but would be willing to bet that, overall, it's pretty close to the same percentage. Thus, the CBers *are* interested in electronics – maybe much more than many amateurs I know.

I think more ham clubs should sponsor CB clubs, and then many of our problems would be solved – especially in attitudes on both sides.

Lee Wm. Cook
AFB8WNK/WA8WNK/6
Norton AFB CA

COMMON SENSE

Congratulations on a fine publication: *73* is the first special interest magazine I have encountered that covers a broad range of topics without losing the beginner or the expert, and your ad layout is superb as it does not dominate the content. One criticism, however – with the pages and pages of copy that obviously go into the editorials, when does the editor have time to *edit?*

One thing that really caught my eye was "Hamburglar." The key here is common sense. To reiterate:

1. Do *not* talk about your equipment on the air. We all like to boast about our prized belongings, but remember that monitoring the airwaves is fair game and you have no idea who is listening – *especially* on 2 meters.
2. *Anticipate* being ripped off. Wire your shacks and cars for "sound." It won't guarantee safekeeping, but the chance of catching or at least scaring off the culprit will increase tenfold. It's merely low cost insurance.
3. If you're operating 2 meters mobile (and it's most likely you are), take a look at your installation from about 20 feet away. Glance through the window at your rig. You'll really be startled at the resemblance it all has to a CB setup, especially if you have a 5/8 wave or collinear whip. So if you think you've been ripped off by the all-too-common CB thief, you can really kiss your rig goodbye, as somebody will eventually hook it up to a CB antenna and blow the final sky-high.
4. A word to the wise is sufficient. If you think there is dirty work afoot (you people in central Colorado should pay attention), get the word around – *quick* – and use the telephone. Stay off the air and hide your gear, and with more emphasis, *stay off the repeaters.* During such times it is important to stay low. It's kinda like a scant bathing suit – the more people who know means a better chance of getting burned . . .

I heard somewhere among the pages of the 8/76 issue some grousing (albeit minor) about the intermod on 2 meters. What are you guys complaining about? I am one of those black sheep of the communications world, a scanning monitor listener, and you have never heard intermod like you get on 99-44/100% of the commercially available scanners. Front ends on most of this equipment are as broad as barns and the i-f filtration is no better. Try this – take one ham broadcasting at about 144 MHz and one police department dispatching at just under 155 MHz. If the difference happens to be 10.7, scanner users may as well turn off the power, because the first i-f is swamped and the bad filtration in the 2nd i-f helps matters little. (I'm not pointing any fingers – the same thing happens with police and commercial mobile telephone at 165 MHz.) At any rate, it's bad, especially here in the Los Angeles area where there is an unusually high concentration of rf in the 144-174 MHz range.

In closing, I'll admit that I am not a ham, but that I would like to become one. Only one thing is stopping me – the CW requirements (I can already see thousands of you ready to jump on my case). I cannot see why I have to relive the history of radio communications via International Code and flea power when my primary interests are FM radiotelephone and data communications on 2 meters and above (with a special weakness for omnidirectional work on ¼ meter). Someday, I hope, the regulations will be relaxed and amateur radio will be allowed to catch up with the rest of the communications world.

Michael C. Musick
3102 W. Monroe Ave
Anaheim CA 92801

HAMM ACT?

How about adding additional counts to the indictments in "Hamburglar," e.g., Purloined, Heisted. If transported across state lines, is it a violation of the Hamm Act?

Nubar Tashjian K6KVX
Oakland CA

BUG VI

I enjoyed your "fast shuffle" editorial in the September *73*, and "them's my sentiments," exactly! Like we are being administered by a bunch of kids. Perhaps with a new consumer-oriented administration we will fare better!

There was an error in my letter that was published in that issue commenting on your I/O editorial, in that my draft did not correctly get translated into the final copy. We have the *potential* to accept ASCII at the ATV repeater, but pending an OK on our petition or similar RMs, individual amateurs may not transmit ASCII except through OSCAR. The same action, however, could be triggered by any other means, such as CW combinations, RTTY, etc., though clumsier.

In this connection, you might check on touchtone pads, and Part 97.117. If I read it right, you could also get a pink ticket for using that unauthorized code. And thousands per day, too!

Charles E. Spitz W4API
Arlington VA

WORTH ITS PAPER

Help! Your mag is great, but the advertisers don't want to know about export orders. I have an import permit for R5000.00 (about seven thousand dollars) but no one answers my letters. You should try getting on moonbounce with the parts available here. I want to import just about anything in ham gear for the guys here, so perhaps you have a few good people to recommend.

We have a new repeater here in Johannesburg, and 2 is going crazy with A2C, 7P8 and 3D6 all getting in on the act. The frequency is 145.05/65 for anyone coming this way.

Next problem – I've just received your April issue a week earlier than usual.

Keep up the good work. At 3 dollars a copy there's only one mag that's worth its paper as far as I'm concerned.

C. R. Newport ZR6CW
Northcliff, South Africa

FIVE YEARS AHEAD

I would first like to say I truly think that *73* is five years into the future as to where ham radio will be.

When you first started putting out *73* with the new I/O computer sections, I thought it was a big waste of space and at one point I was thinking about not even renewing my subscription (as you could tell by the big lag of time after my last subscription terminated until I sent in my 3 year subscription). I now have a minute understanding of ICs, and I am developing an interest in computers for which your I/O section proves to mature my interest. If I remember right, my interest in ham radio started with me reading publications about ham radio. Could it be possible that after reading your I/O section for a few more months I might wish to purchase a computer?

Steve Branom WBØOIS
Des Peres MO

WRITTEN CRAZINESS

The written craziness appearing in the first three issues of *73* delivered to my door has prompted me to send in my $8.00 so that maybe I can understand the present by reviewing the past. After reading only official ARRL books, my closed mind was opend to a breath of fresh air upon my initial exposure to a copy of *73*. Aren't the low bands all there is to ham radio? After reading all the ARRL books I thought I was second best with my little Technician license, but after reading your articles I realize I'm right on top of the heap. After all, I was only looking for some dependable local communication when I sought the Tech ticket, not a way to talk to some people I've never even met in some country I have never even heard of.

I started this course after being in the middle of CB here in Memphis for the past ten years. Neighbors used to speak under their breaths as my brother and I drove by, calling us, "Those funny people with those strange radios in their cars and those funny antennas." Then, at the precise moment of my life when I was ready

to sell out of CB, a friendly ham introduced me to a handie-talkie. I was hooked. No more would I have to call for my friends in vain on the CB when their units wore off. With an HT all I needed to do was punch up the patch and ring their phone. Total communications right in the palm of my hand.

Well, I'm into it now and with about two hundred avid listeners on the two meter autopatch repeater I'm a little bit shy about calling my CB friends who think it's cute to say 10-4 on two meters. And the guys on the machine have had their clique set up for at least a hundred years and don't have a thing in common with a converted CBer, so even with a handful of total communications I'm still stuck.

I work with CB everyday in my job at the local shack, so I know what it is, and I know what two meters is here in Memphis. Both are a real strikeout. You've been pushing both, but from my position neither one is worth the pushing. The real friendly folks who enjoy the art of conversation and enjoy listening to other people talk are the people in Memphis on six meters.

With a new six meter repeater and an ever-expanding club as a result of the six meter repeater — not to mention the two meter repeater of theirs now going through testing — this is the real home of amateur radio in our community. As usual, about half the ham population in our town is ignoring it.

So maybe that's why I still read your magazine — kindred spirits? Your brick wall at the ARRL is just about as big as the brick wall our group runs into every time we try to do something with another ham group here in town. If it's not pickiness, it's personalities they're objecting to. Cooperation is the key to success (to coin a phrase), and if there weren't a few good hams in the two meter group, I doubt if anything would get done by a combination effort. God bless 'em. 73s to *73*. Ship my 20 back issues quick and I'll keep reading your mag, no matter how many computer articles you put in.

John Wood WA4BPI
Memphis TN

P.S. By the way, check out the *QST* covers for July and June, 1976. Each story the cover promotes is in the other issue. The June "Amateur Radio at the Olympics" story is found in the July issue on page 50. The July story, "The ARRL Nat'l Convention, *Denver*," is found in the June, 1976, issue on page 53. Obviously you've noticed it, but since you didn't mention it in your September, 1976, issue, I thought I'd pass it along. Hope it gives you a laugh — it did us.

Okay on the QST covers . . . I hadn't noticed. Re 2m vs. CB vs. other ham bands . . . I suspect that we will get out of our hobby about what we put into it. Since most of my operating these days is while I'm driving, and since the driving process takes much of my attention, I'm afraid that contacts with me on 2m or CB are probably pretty dull. Any other readers with ideas on this? — Wayne.

GOODIES

On reading the I/O Editorial in the August *73*, I felt it necessary to let you know how much the I/O features are appreciated by some of us in the UK.

Here, as in most of Europe, the low end of the computer market has been neglected, and our present awareness of trends in the US of what must eventually turn out to be an enormous worldwide market is largely due to the features and advertisements that have appeared in *73* since November 1975.

My experience with a modest 6800 kit convinces me that you are perfectly correct in foreseeing a growing use of microprocessors in amateur equipment, and I only wish that we found it easy to import some of the "goodies" that are advertised so tantalizingly in your magazine.

You mention that a new magazine covering the computer hobby field may be introduced, and I hope that when this happens, the *73* agent in the UK will be able to handle subscriptions to it.

Finally, as a radio ham with a professional connection with large computer systems, I would like to say a sincere thank you to *73* for what has appeared so far, and for what I hope will continue to appear in the future.

W. D. Old G3CZZ
Camborne, Cornwall
England

HELL-BENT?

Would you please explain to me why you and other magazines seem so hell-bent on recruiting new members to ham radio? I am sincere when I say I really do not see any advantage to me by increasing the clutter on the air. Of course, I can see why *you* would want an increase — for more business, of course — and I don't blame you.

That goes for manufacturers of equipment — also more business. But why should I encourage people to be new hams? Have you ever tried to get on 20 meters around 6 o'clock in the evening? Have you ever heard the incredible pileups when DX starts to come in? The QRM is impossible.

I am not trying to be sarcastic with this letter. I really would like to know why it is to my advantage to encourage new hams. You may use this letter if you want to — possibly others may feel like I do.

Harry Torossian WB8SWD
Dearborn Hgts MI

Well, Harry, though parts of 20m may be overoccupied, even at peak hours of activity there are large parts of our ham bands which are almost unused. The "use it or lose it" theory is a valid one, and the fact is that we have far too few amateurs to use the channels allocated to us. When you have trouble getting through on 20m, you might tune up to 15m and be amazed at the wide open (unused) spaces. If that doesn't impress you, then tune the 1.7 MHz of 10m and listen to nothing. Up on 6m there is maybe 500 kHz of activity and 3.5 MHz has very, very little. In most areas of the country 144-146 is dry. And with the exception of a handful of pioneers and a few pioneering repeaters, 220-225 MHz (the band manufacturers want for CB) is empty. 420-440 is dry in many areas . . . and above 1215 MHz what have we? It does me no good to print a lot of articles exhorting hams to use these bands, for if they do then we will have less use of the other bands. We are spread so thin as it is that about 50% of the 2m repeaters are hurting badly for activity. If you want to really feel lonely try going on 6m or 220 MHz repeaters . . . with a very few exceptions. Yes, we are in great need of amateurs if we are going to have reasons to hold our bands . . . or to get more bands. If we continue to force all newcomers to come into amateur radio via the lowband $800 transceiver route (Novice license), we will end up with more and more jamming of the few low band frequencies and a continuation of the wide open VHF and UHF ham bands. Yet, with the discontinuance of the mail order Tech license, this is exactly what the FCC has brought about. — Wayne.

LESS AND LESS

First, thank you very much for the copy of the July issue. I have a subscription, so I got to see my article on computer Morse when it first came out. When that other copy came, I had further proof you and your staff have it where it counts — concern for people. You encouraged (almost cajoled) me into writing the article with your editorial calls for attempts. Then, to my astonishment, you publish it, my first ever attempt at publishing anything. Now, you make sure I have an extra copy to remind me to write more and better. Thank you all, very, very much.

The rest of this you may use in your Letters department if it would be of any value to your readers.

After reading three or four editorials of yours saying CB is not all that bad (or is it not all CB is bad) and talking with some local search and rescue people to make sure, I mailed in a CB application on 31 May. I settled down to wait the four months. Then I got the info on temporary licenses, filled out a form, bought two walkie-talkies for use on my impending vacation. I considered "bending the rules" after my 60 days were up. Then I realized that the main complaint against CB is people "bending rules" to one degree or another. I resolved that I would not attempt to face that moral issue until I actually was tempted to operate illegally. On 12 July my license arrived to the relief of my overtime conscience. 43 days' delay, and since my license was approved on 23 June, I suspect that a large part of that was in the postal system. It seems that the FCC is responding to the flood of CB applications. I wonder what else they will be doing for that large block of people.

By the way, out here I have never heard more than five channels busy at any one time. Occasionally, I hear callsigns used. I haven't heard a foul mouth or a conversation I wanted to join yet. My wife and I have found our walkie-talkies extremely useful, and we will continue working with search, rescue and service groups.

The article by Fields in the September issue ("How to Catch a CBer," pp. 74-77) was first rate. I learned a lot about CB from that article. I think we have to incorporate anything from CB that will serve a useful purpose. If we don't start selling ham radio on its merits, CB will remain in the spotlight. That means *they* will get the publicity and praise that leads to support in Congress and at the FCC. That means more goodies for *them* — which leaves less and less for us.

James Whitfield
Edwards AFB CA

SNEAKING ONE OVER

Finally, through Docket 20282, the FCC does something positive for ham radio. I am referring to the provision in the docket which allows for Novices to use 250 Watts of power. It also restricts other classes of licensees from using more power than that in the Novice portions of the bands.

I agree with you that now Novices can purchase the latest state-of-the-art transceivers. This will definitely aid Novices in the crowded bands.

After reading of these changes in the ham magazines, I went out and bought a new Yaesu FT-101E with accessories. I spent about $1000 on this rig. I am expecting my Novice ticket soon, if the FCC ever finishes grading it and issues my ticket.

What I wanted to inform your readers of is that "Mother" ARRL in the June 12, 1976, meeting of the Executive Committee unanimously *voted* to petition the FCC *to reconsider* that portion of Docket 20282 dealing with the 250 Watt power proposal for the Novice bands. I for one am very disappointed with this development. Not only have I invested a considerable amount of money in gear which today is legal, but tomorrow may not be, but also the ARRL, which is supposed to be looking out for ham radio, is trying to sneak one over on all prospective as well as currently active Novices. What I really

Continued on page 38

New Products

NEW 5½, 6½ DIGIT DIGITAL VOLTMETER CHECKS AND CALIBRATES ITSELF

Using two microprocessors, one for measurement control and the other for computation and remote programming, this new fully-guarded, integrating Hewlett-Packard Model 3455A Digital Voltmeter is a high-performance unit designed for bench or systems use. It measures dc from 1 uV to 1,000 volts, true rms from 10 microvolts to 1,000 volts, or, with an optional average ac converter, from 10 microvolts to 1,000 volts average. Resistance measurements cover from 1 milliohm to 15 megohms in six ranges, either two or four wire. A high-resolution mode uses 6½ digits, but for faster reading 5½ digits are used.

Use of a plug-in precision reference enables the instrument to check itself against the reference. Under control of the microprocessor, it makes its own corrections. The reference unit can be easily removed from the 3455A and calibrated periodically. A self-test feature verifies operation of the dc circuits. If a problem is found, it is easily analyzed using the front panel display.

Mathematical functions built into the 3455A let the user offset, take ratios, or scale readings so that readouts are in physical units. A "% ERROR" mode converts readings into percent change compared to a predetermined reference.

Dc measurements are made at 24 readings per second (22 readings per second for 50 Hz) with 1 microvolt sensitivity. Greater than 60 dB normal mode noise rejection is obtained on all dc ranges. Dc accuracy is ±0.0023% at full scale.

True rms measurements are made to 13 readings per second at frequencies above 300 Hz. True rms is measured with best accuracy of 0.1% over a 30 Hz to 1 MHz bandwidth. Signals with a crest factor as high as 7:1 full scale can be measured.

Average ac measurements (optional) are also made up to 13 readings per second at frequencies above 300 Hz. Average ac is measured with best accuracy of 0.1% over a 30 Hz to 250 kHz bandwidth from 1 to 1,000 volts in four ranges with 50% overranging. The Model 3455A can be ordered with Option 001, which provides average ac instead of true rms, at a reduced price.

Resistance is measured in six ranges from 100 Ohms to 10 megohms full scale with best accuracy of 0.0025% at full scale. Maximum current through the unknown is less than 1 milliampere. Internal circuits are protected against overvoltage.

Standard on the 3455A is an HP-IB (Hewlett-Packard's implementation of IEEE-488) I/O for systems operation. The front panel indicators on the 3455A display range, function and HP-IB status during remote operation.

The U.S. price of the Hewlett-Packard Model 3455A Digital Voltmeter, including true rms measurement capability, is $3200. Model 3455A with Option 001 replaces true rms measurement with average ac measurement and sells for $3000. *Hewlett-Packard Company, 1501 Page Mill Road, Palo Alto CA 94304.*

THE TF40 POCKET CRICKET

Sencore, Inc., manufacturer of electronic test and measuring equipment, has announced the release of an all new portable transistor/FET Tester: The Patented TF40 Pocket Cricket.

Bob Bowden, Sencore's Marketing Director, explained, "According to EIA figures, more transistors and FETs have been used in the last five years than any other active component, which means the service and maintenance of these components will be an ongoing process for many years to come, in both the consumer service market (including radio, TV, stereo, sound and communications) and the rapidly expanding industrial MRO (Maintenance Repair Operations) and medical test equipment markets."

The tremendous need for a fast, reliable GO/NO-GO test of transistors and FETs was clearly demonstrated by the overnight success of Sencore's patented TF26 Cricket transistor/FET tester, introduced three years ago. Since that time, the Cricket has become the most popular transistor/FET tester ever produced, with over 30,000 Cricket circuits in the field today. The Cricket has established itself as a standard in the industry for

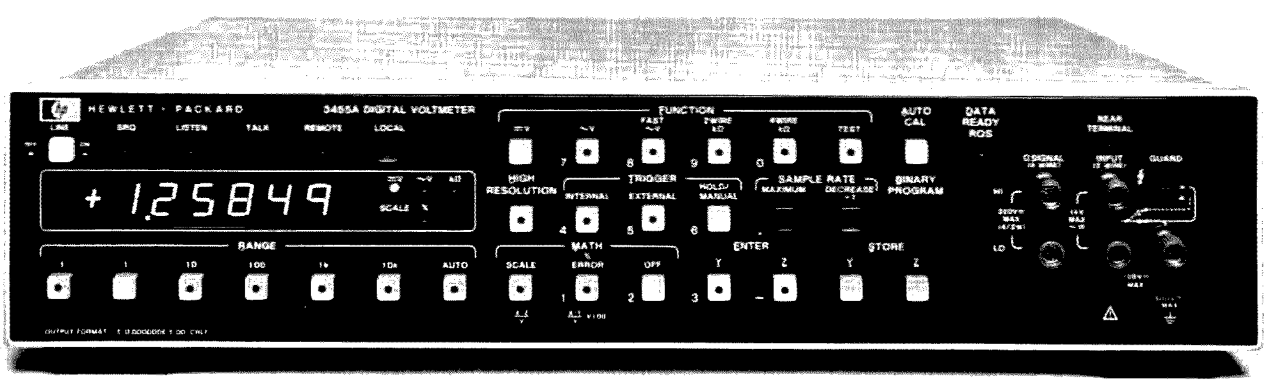

speed and reliability.

However, there was a growing need for portable testing capabilities for numerous applications where on-site transistor/FET testing is required, such as field service work of medical products (where ac power may not be provided), consumer products service, business machines service (copiers, typewriters, and word processing units), general maintenance of industrial equipment, mobile communications stations, avionics, and numerous other applications. No reliable answer for this need for portable transistor/FET testing was available until now, with the patented TF40 Pocket Cricket.

By implementing a low current drain state-of-the-art design, the TF40 Pocket Cricket now incorporates the 99.9% reliable Cricket in a small, compact, rugged design for the first reliable, completely portable transistor/FET tester to meet this tremendous need for field maintenance and service of solid state equipment.

Mr. Bowden said, "The Cricket circuit tests all transistors and FETs in seconds using a Sencore-patented universal phase inversion test based on the fact that all transistors/FETs amplify and invert a signal if the device is properly working. Total GOOD/BAD testing takes only seconds and requires no setup information. The test leads are connected to the transistor in any order and the test switch is rotated. If the transistor is good, the Pocket Cricket will chirp and the meter will read upscale." (The test tone was added because the test can be made so quickly the meter may not have time to read upscale.)

Once a transistor is known to be good, the polarity can be determined and a transistor can be distinguished from an FET. This is extremely helpful in establishing a replacement part of a schematic is not available. And, the Cricket test circuit is 100 percent safe to the tester, circuit, and user.

Many times a transistor will show good gain, but not operate in circuit due to inter-element leakage. To be as reliable as possible, the Pocket Cricket is designed to measure all individual inter-element leakages on the meter for a 99.9% reliable check of all transistors and FETs. The Pocket Cricket's metered leakage test is exclusive in pocket portable transistor testers, offering the most reliable test available for field use.

For the first time in a portable transistor tester, all three transistor leads can be identified, in seconds. The exclusive lead ID control is adjusted until only one of two positions on the test switch indicates a good transistor. The lead configuration then can be read directly off the coded test switch. This feature can save time in determining proper basing configurations, without the use of reference material.

Included with every TF40 Pocket Cricket is a specially-prepared training tape explaining the overall operation and application of the TF40. Mr. Bowden explained, "The Pocket Cricket is an extremely versatile, reliable instrument that will undoubtedly be used by thousands of people in plants, field job sites, large service shops, and schools. The training tape is designed to give any new operator the basic instructions he needs to put the TF40 to work for him as soon as possible. With such a tremendous need for on-site servicing, the patented Pocket Cricket should receive tremendous response from all areas of the electronic maintenance and service markets, especially considering the low $98 price, plus the fact that the Pocket Cricket carries Sencore's 100 Percent Made Right Lifetime Guarantee, insuring a lifetime of performance free from factory workmanship error." *Sencore, Inc., 3200 Sencore Drive, Sioux Falls SD 57107.*

UC 1800 MICROCOMPUTER

The UC 1800 is a completely self-contained microcomputer designed to allow maximum ease of use.

It has significant value as a training device in the construction and use of computers in general, and as a device for evaluating the application of a microprocessor in new products.

The UC 1800 is completely assembled and tested. As such, it has important design cost saving advantages to industrial users contemplating the use of microprocessors in their products.

The comprehensive instruction manual, simple straightforward software instructions, self-contained keyboard, and four digit hexadecimal display provide a package which promotes rapid training and system development.

All users will benefit from the growth potential incorporated in the UC 1800. External bus access allows future connection to a host of peripheral devices and add-on memory which can provide full mini-level computer power.

The user of the OEM version will find such features as full military temperature range, low power CMOS, single 3 to 15 volt supply and TTL compatibility are decided advantages in a wide range of product applications.

The outstanding features are: low cost, built-in keyboard programming, digital (hexadecimal) display for address, memory contents, and I/O port, front panel control of interrupt, DMA, I/O flag, 256 byte RAM expandable to 65.5K bytes RAM or ROM externally, low power consumption, special circuit for saving memory content when unit is turned off, single power supply, parallel and serial I/O data line capability, availability as single PC board microcomputer with or without on-board power supply for OEM applications.

Applications include use as a computer training device for schools and industry, microprocessor application demonstrator/evaluator, software development trainer, household or hobby computer, or small business or industrial computer. The UC 1800 may also be used for process control, laboratory automation, traffic control, and data communications. *Infinite Incorporated, PO Box 906, 151 Center Street, Cape Canaveral FL 32920.*

NATIONAL SEMICONDUCTOR CORPORATION CONSUMER PRODUCTS DIVISION ANNOUNCES TV "ADVERSARY" GAME

National Semiconductor, Consumer Products Division, has announced it has received FCC approval for its TV game, "Adversary," which was previewed at the Consumer Electronics Show in Chicago June 13-16, 1976.

The video game, "Adversary," features a choice of 3 playing fields: Tennis – played by one or two players on green court; Ice Hockey – played by one or two players on blue ice; Handball – played by one or two players on brown court.

All games are in full color, have realistic sound effects when the ball or puck strikes a surface, and offer a choice of 3 individually-selectable paddle sizes. Serves are controlled by players, not by random. Scoring is automatically displayed in large easy-to-read numbers after each point is scored, and is off during play. Controls are individual, which enables players to sit in a favorite chair to compete.

"Adversary" offers 7 modes of operation: 3 modes of 2 players, 3 modes of player against himself, and 1 mode with player against machine.

A special feature allows "time out" during play without changing the score. Play can be resumed at the point where "time out" was called.

"Adversary" employs National Semiconductor's recently announced MM57100 video game logic circuit and LM1889 video modulator. *National Semiconductor, Sunnyvale CA 94086.*

ALL NEW SOLID STATE DC101A AUTOMOTIVE DIGITAL CLOCK

The DC101A digital clock sets the trend in digital automotive electronics which will be offered in the upcoming years. Its small size (1¼" x 2¼" x 5/8") and coordinated leather texture and chrome exterior make it an attractive addition to any car. Solid state electronics and a quartz crystal

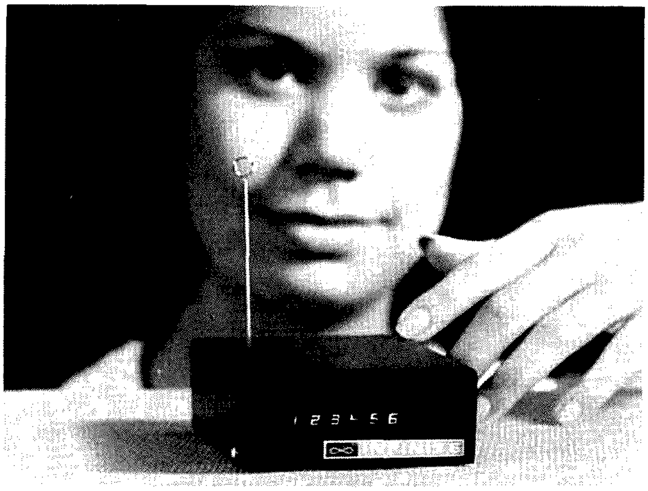

produces a clock that is the most modern timekeeping device for automobiles. It can be easily mounted in minutes in its compact ABS plastic case. Installation is accomplished by drilling a nine thirty seconds of an inch hole in the dash, passing the power wires through it, and connecting them to the power with quick-connect fuse clips. Bright light emitting diodes allow for easy reading in all conditions. Since the clock is all solid state, it is inherently long-life. A one year guarantee is offered on the clock. Price: $49.95. *Lectronix, PO Box 42, Madison Heights MI 48071.*

NEW CUSHCRAFT FACILITY

Construction is underway on the first phase of CushCraft Corporation's new 50,000 square foot antenna research and production facility.

All manufacturing operations, executive offices and research will be moved to the new facility by November 15th. It is located at the Grenier Industrial Park in Manchester, N.H.

Bob Cushman, treasurer of the company, reports this all new plant is designed specially for antenna manufacturing. It will allow increased production of current amateur, citizens band and professional antennas — plus the introduction of several new antenna types.

Planning for the new production lines and equipment has been in process for several years. When fully operational, the plant will be a model for the industry, allowing CushCraft to maintain its traditionally high value standards.

FS 20 FIELD STRENGTH METER

The FS 20 Field Strength Meter is a wide bandwidth, extremely high sensitivity, digital readout rf power monitor. This instrument is highly suited for monitoring the output power performance of communication transmitters over an extremely wide frequency range without connection to the transmitter.

All two-way radio users want the confidence of knowing their transmissions are getting out. The field strength meter approach to accomplishing this is especially valid since the *radiated* power from the antenna determines the reading obtained on the FSM.

Consequently, anything that causes a loss of rf power will be detected, be it a damaged antenna, loss of input power, or circuit defect. This is not necessarily true of in-system monitors. Some unique features include: six digit LED digital readout; battery or external power; instant Velcro attachment to metal, plastic, or wood; small attractive case design with non-glare epoxy finish; thin flexible antenna.

Weighing six ounces, the FS 20 FSM has a frequency range of from 2 MHz to 1100 MHz. Its dimensions are 5½" x 3" x 1¼". Applications include monitoring transmitter power, transmitter tuning, preflight radio checking, locating rf leakage points, adjusting antennas and transmission lines, locating radiating ELTs, locating radio bugs, and independent testing of EPIRB units. The FS 20 also satisfied FCC requirement 83.528 for marine VHF. Option 001, a high intensity readout, adds about three times the normal brightness and sells for an additional $5.00.

Each FSM is guaranteed for a period of one year. A modest fixed price repair service is available after the warranty expires. Introductory price: $49.95. *Infinite Incorporated, PO Box 906, 151 Center Street, Cape Canaveral FL 32920.*

NEW LOW POWER, LARGE MONOLITHIC LED DISPLAYS

This new series of 4.45 millimeter (0.175 inch) high, seven segment numeric displays require only two milliamperes per segment — about 1/3 the power required by presently available displays. Designed for instrument applications, these HP 5082-7265, -7275, -7285 and -7295 LED indicators are available in five and 15 digit packages.

Close digit spacing of four digits per inch, combined with low power requirements, now give the designer of portable digital instruments, desktop calculators and other digital devices a large, easy-to-read display. They can be driven directly from MOS circuits.

Models 5082-7265 and -7275, five and 15 digit clusters respectively, have a center decimal point. Models 5082-7285 and -7295, also five and 15 digit clusters, have a right decimal point. Devices may be mounted with edge connectors or soldered wires.

Necessarily more costly than smaller displays, the five-digit 5082-7265 is $11.25 in quantities 200-999; the 15-digit 5082-7275 is similarly $31.95 (U.S. prices). *Hewlett-Packard Company, 1501 Page Mill Road, Palo Alto CA 94304.*

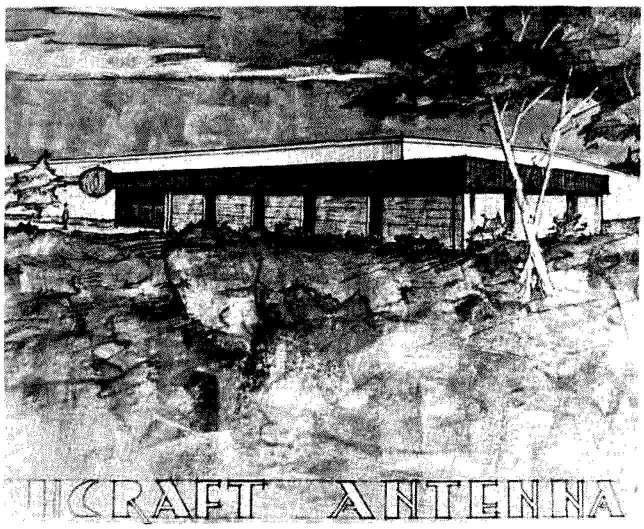

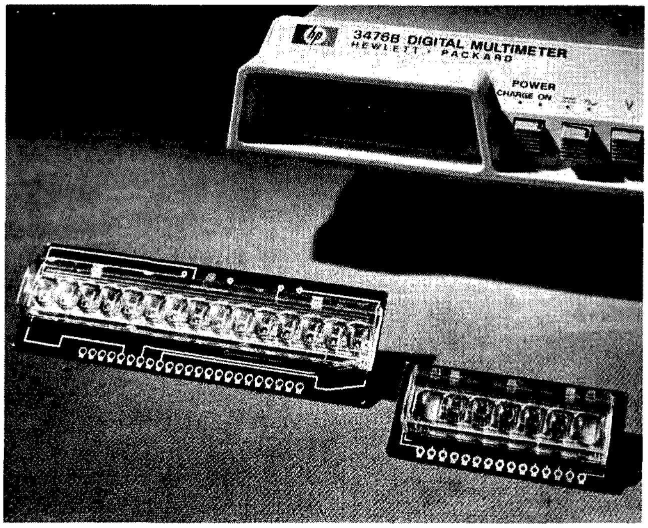

Cordless Iron Tips

-- when you're up against the Wahl

David F. Miller K9POX
7462 Lawler Avenue
Niles IL 60648

No, not the kind of tips that heat up, the kind of tips that keep the latter heated up! In a recent advertisement, the Wahl soldering iron people set forth the claim that many users have said that their $20 cordless soldering iron is worth its weight in gold. Ever since my wife bought me one two Christmases ago, I'll have to agree that for numerous tasks around the ham shack it is almost indispensable, especially once you get used to having one of the darn things. For example, for antenna jobs 150' from the nearest ac outlet, small "quickie" soldering jobs when you don't have time for the "landlocked" iron to get perking, and for mobile or vacation jobs to fix that intermittent *when* it happens. The extra fine tip that's available for these irons is great for making accurate joints on those little bitty circuit board pads that seem to be in the vogue now (you know, the ones that turn to goo with an American Beauty). The model that I have (Wahl 7500) comes with a charger stand, and all you have to do is drop it in the stand to revitalize those two little 1200 mAh nicads inside.

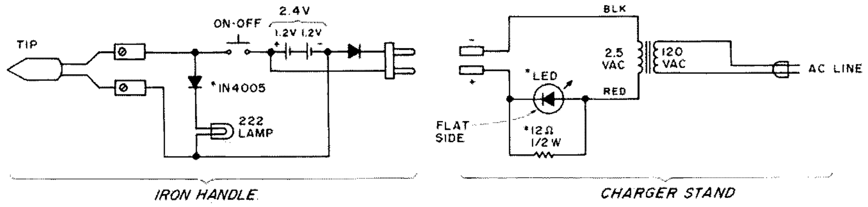

*Fig. 1. Wahl Model 7500 iron and stand. 90 mA total: 30 mA through LED, 60 mA through 12Ω ½ W resistor. * indicates parts added; all others are part of original circuitry.*

I often wondered whether or not the two contacts on the iron were making good connection with the matching contacts in the stand (I worry about things like that). After all, the iron element draws about 5 or 6 Amps when the cells are fully charged, which represents about 10 to 15 minutes of actual soldering, so it's important to keep it up to maximum in order to have it when you need it. I usually ended up jiggling the iron around in its stand just to make sure. The charging stand as it comes from the factory consists merely of a 120 V ac to 2.5 V ac transformer and the two mating contacts (Fig. 1). My unit has the *non*-rapid charge cells, so the maximum safe charging rate is 1/10 of 1200 mA, or 120 mA. Notice the clever placement of the diode in the iron itself so that reverse charging from the stand is impossible. (Also, if the charging terminals on the iron accidentally short to something metal, the nicads won't discharge because the diode won't conduct that way.) Back to the point: I took it upon myself to install an LED (light emitting diode), polarized as shown, in series with the red charger lead inside the charger itself. I chose to limit the charging current to 90 mA (nice and safe) with 30 mA through the LED (bright enough and also safe) – hence the 12 Ohm, 1/2 Watt resistor paralleling the LED. Now when I drop my iron into its stand I'm sure that it's taking a charge by the fact that the LED is releasing photons.

The actual modification is quite easily accomplished in one evening. I used a diffused red LED that required a 3/16" mounting hole deftly drilled in the front of the stand. After checking the fit and deburring the hole, apply a couple of drops of epoxy from the inside to hold the LED nicely. Clip the LED leads to a convenient length and make small loops in them to act as tie points for the resistor and charger leads. Incidentally, I've noticed rather wide variance in light output, current drain and chip centering in surplus LEDs, so check the device before committing yourself with epoxy. You may find that you will have to choose from several devices to get the desired results. All that's required to custom tailor this idea to your hardware is a meter that will read at least 100 mA, a few test leads with alligator clips on them, and some resistors (or a pot) around the value shown. If you don't worry as much as I do, you can just copy the circuit as shown and you'll be in the ball park.

As mentioned earlier, you may wish to use your cordless iron in the car or when on vacation, which, of course, necessitates bringing along the charger stand, right? Wrong! Consider whipping up a charger cord that will allow you to charge your iron directly from your automobile, boat, plane, etc., 12 volt system. The tactic that I use involves borrowing the cord from something that must go with you on every vacation (unless you're going camping in the north woods) – your electric shaver. Perchance the ac coiled cords for both my Schick "Flexamatic" and my

Front view of modified charger stand.

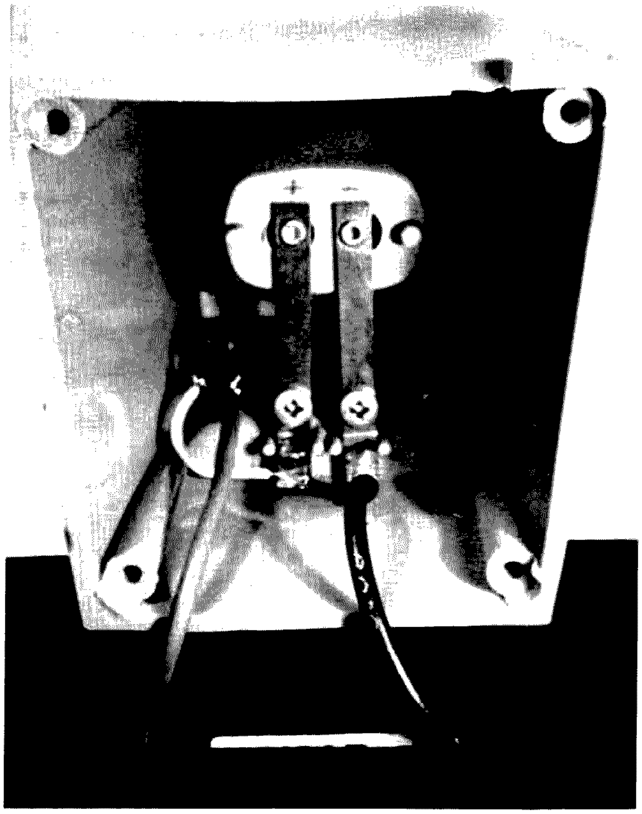

Interior view of modified charger stand. LED and its resistor are shown at the left of center.

Norelco "Tripleheader" shavers will mate with the Wahl 7500 iron with minimum modification. I found that I had to shave (no pun intended) about 1/32" off of the female cord receptacle end (completely around) with a sharp knife and then file it smooth to obtain a perfect fit in the iron. Don't get carried away – 1/32 isn't very much; yes, the cord still works in the shaver. I then wired the circuit shown in Fig. 2 into a standard female ac cord receptacle called a "STA-TITE," obtained from the local hardware emporium. Note the inclusion of the ever-present LED to show you when the iron is plugged into the shaver cord properly and/or when the shaver cord is plugged into the dc adapter cord properly. If the LED doesn't light, reverse either end of the shaver cord (no harm done because of that diode in the iron's case). The opposite end of the dc adapter cord is terminated in a standard cigar lighter plug; note that this end is polarity conscious. The present standard seems to be negative ground (lighter plug shell), so wiring as shown will be correct. By the way, this dc cord is intended as a charger cord only; attempting to solder a connection with it plugged into the vehicle's cigar lighter socket will only replace about 90 mA of the 5 or 6 Amps needed to run the iron – and that won't buy you much! The figures on this circuit are identical to the ac charger: 60 mA through the 150 Ohm, 1 Watt resistor and 30 mA through the LED/220 Ohm, 1/2 Watt resistor combination. These figures are based upon 13 V dc input, which is an average lead-acid storage battery value. You can purchase Wahl's plastic carrying tube for the iron, or you can do just as well using a decent 1-3/8" to 1-1/2" mailing or paper towel tube fitted with end caps (make it long enough to house the dc charging adapter, too).

Just as a bit of additional info, I mentioned that the Wahl 7500 cordless draws 5 to 6 Amps from the internal

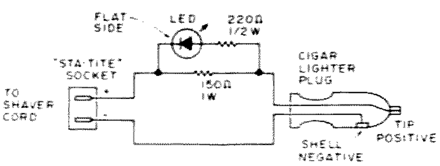

Fig. 2. Dc charging adapter cable for Wahl Model 7500. 90 mA total: 30 mA through LED and 220Ω ½ W resistor, 60 mA through 150Ω 1 W resistor.

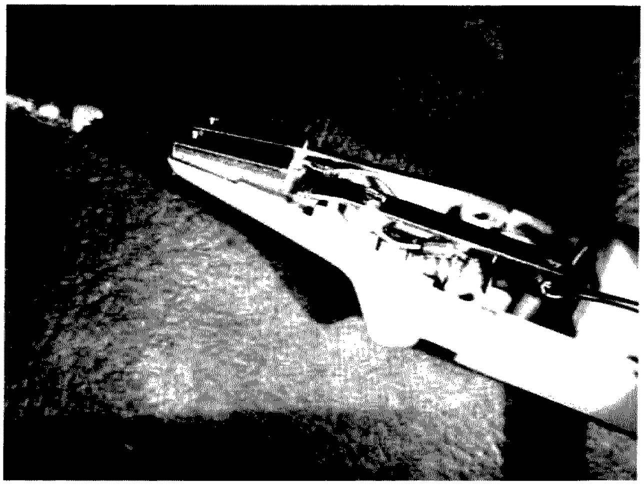

Interior view of iron, showing diode used to slightly drop lamp voltage.

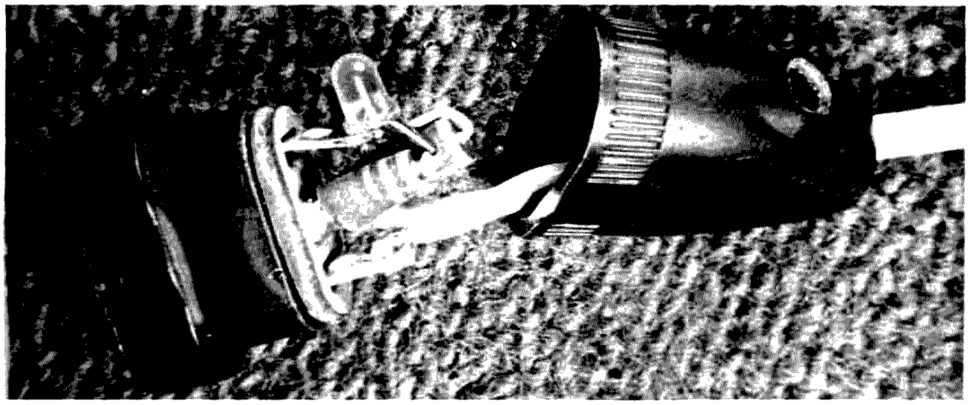

Interior view of dc adapter. Note the use of center screw threaded ferrule as tie point for resistors and positive dc lead.

batteries; this is true once the element is hot. The initial current through a cold or cool tip is about 9 Amps, tapering to the above after about 5 seconds. This suggests that the working time between charges is less when the iron is continually turned on and off. I checked my iron against the clock after a full charge and was able to get over 12-1/2 minutes of useful heat in a continuous ON condition. Presumably, off/on operation would yield something less than this. There are all kinds of ins and outs with something as simple as this seems to be, aren't there?

Before you relax for the evening, here's one additional easily accomplished modification, this time inside the iron itself. There's a very handy little light built into the business end of the Wahl 7500, with the nasty habit of burning out too fast. The type 222 bulb is rated at 2.25 V and 250 mA, but the fully-charged nicads put out 2.4 V (under load) and shorten the bulb life quite a bit. I installed a silicon diode (1N4005) in series with the bulb and am getting much better bulb life, plenty of light and more battery capacity for heat instead of wasted light (remember the energy crunch!). With this addition, the bulb has 1.5 V across its filament and draws 200 mA due to the drop across the diode (junction potential). The important thing here is the well-documented fact (in past issues of *73* and other publications) that as you lower the voltage across a lamp from its design voltage, the lamp life increases dramatically (the reverse is also true). Now that you're convinced, just remove the screw holding the bar that makes pressure contact with the shell of the lamp socket and install the diode in its stead, wrapping the anode end around the screw and soldering the cathode (banded end) to the lamp *socket* shell (use minimum heat and remove the lamp first). While you're inside the iron case, put a *small* dab of GC26-01 silicone lube on the switch contact; it's a good all-around contact keeper-cleaner. Note that these modifications directly apply to the model mentioned with *non*-rapid charge cells. However, they could be applied to other models and manufacturers, and, as such, will hopefully act as food for thought.

Now you can relax for the evening and read the rest of *73*, or you could try out your newly modified cordless iron on some of the other interesting projects in this issue, or you could just admire the LED in the stand while the iron is charging. ■

Albert H. Coya WB4SNC
1710 S.W. 83rd Ct.
Miami FL 33155

Bicycle Mobile

-- cover feature

After losing ten pounds and logging dozens of QSOs, I arrived at the conclusion that DXing bicycle-mobile is not only fun, but also healthy!

The idea to add a rig to my bike came to me one night, when, after a few hours of sitting in my shack, I took a shower and stepped on the bathroom scale: I was ten pounds over my normal weight!

We have to do something about this situation. I love hamming, but the idea of turning myself into a blob of lard was not very appealing. The doctor agreed with me: I must cut down my hours in the shack and put in some time doing exercises. I started jogging and doing sit-ups. It was exhausting and boring. So I turned to the bike. Not so exhausting, but still boring.

I tried reading while pedaling, but (after a near miss), decided that this was unsafe.

The next day, I brought along my two meter rig. That was quite an improvement. I had a chat with the local boys through the nearest repeater. To improve my signal, I installed an eight wave antenna on the back of the bike; the chitchat expanded to other repeaters.

Then the rechargeable battery gave up, and I installed an outboard heavy-duty battery.

I am never satisfied with what I have, and always seem to want something else. Maybe I was missing my DX friends, because the idea of adding an HF rig to the bike came to my mind. That invisible bulb lit in my head, and I started to look around for the right thing. The transceiver I had in mind had to be light, capable of putting out a decent signal, and, of course, battery-operated.

Even if you find the ideal rig, a friend of mine told me, it's going to be very difficult to use a vertical antenna. The bike is not enough for a ground plane . . .

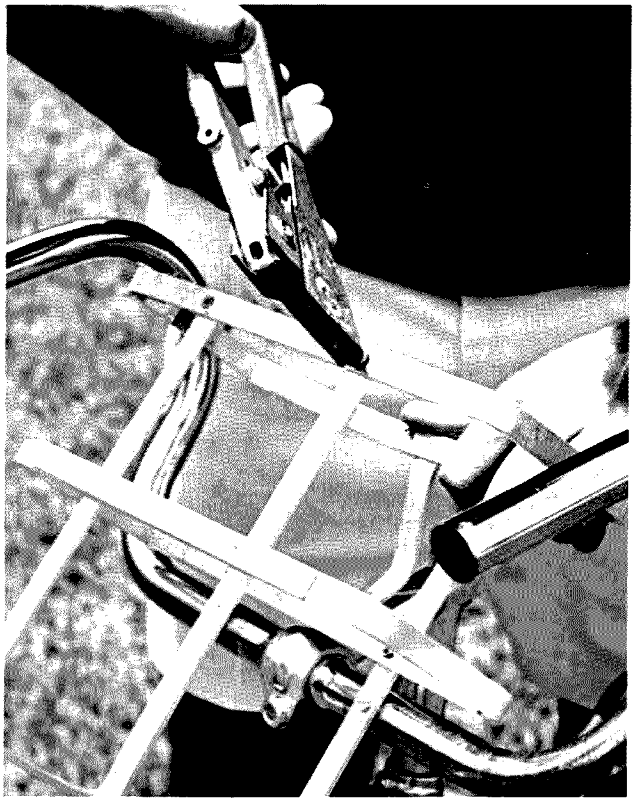

My enthusiasm was dampened a little, but I decided to try my idea anyhow. I began thinking about building a solid state monobander transceiver. After looking over magazines and books I decided to go by one easy rule: "If you can buy it, don't build it." I got myself one of those little Atlas rigs. The name sounded like it was taken from a moving company, and the appearance was that of a shrunken Swan. The truth is that this tiny transceiver has a tiger in its guts! The only thing you need to operate this rig is a well matched antenna, and a battery with a good Amp hour rating, to feed those hungry finals transistors.

After taking a good look at my old bike, I decided to get rid of the hand brake and install a pedal brake, so that my hands would be free to operate the transceiver.

The Atlas is ideal because there is no tuning or loading. The whole operation is automatic. It's a rig for "appliance operators." If the antenna is matched, as I said before, the only thing you have to do is select the frequency, press the mike's button, and call "CQ."

I installed a rack over the back wheel to hold the battery and the antenna, a Hustler vertical. It is neat, light and well manufactured.

To hold the transceiver between the handlebars, I built a basket out of aluminum strips riveted and fitted to the handlebars with bolts and nuts. The rig sits very comfortably at a 45° angle, for better view and access to the controls. But if you want to spend a few more bucks and save work, Atlas sells a nice mobile rack.

With all the parts in place, my old bike looks like a very interesting contraption. "What will the neighbors say?" my XYL asked me. Well, nobody blinked an eye when we erected the tower and the cubical quad, and this time there is no more reason for anyone to be alarmed.

So I climb on my bike and pedal QSOs. ■

Daniel Metzger K8JWR
7741 Fir Drive
Toledo OH 43612

Build a Simple "Lab" Scope

-- costs less than $70!

Watch any industrial electronics technician in action and you'll notice that he relies almost exclusively on his oscilloscope for troubleshooting. It can measure ac and dc voltages as easily and accurately as a VOM, while also measuring frequency, phase and waveshape. It can spot distortion or interfering signals, and can detect missing pulses and slow risetimes in digital circuits. No other instrument approaches it for versatility.

Unfortunately, the cost of lab-type oscilloscopes ($250 and up) has limited the experience of most servicemen and hobbyists to service-type scopes, which are not true measuring instruments, but merely waveform indicators. Most annoying of all, they require constant fiddling with a "sweep" or "sync" control to keep a steady waveform on the screen.

Now it is possible to build an oscilloscope with nearly all of the advantages of a lab-type scope for less than $70. The completed unit contains only 11 transistors all mounted on a single printed circuit board. It is only 8" high by 12" deep, and weighs less than 10 lbs. This simplicity has been obtained by keeping the frequency response and sensitivity of the scope relatively low (although both are quite adequate for normal use), and by the use of a novel unijunction sweep circuit. This last feature deserves a special explanation.

In a conventional recurrent sweep scope, the signal which moves the beam across the screen can vary in frequency by perhaps 10% to accommodate changes in signal frequency — see Fig. 1(a). The ratio of signal frequency to sweep frequency must always be a whole number, or the trace will be an unstable jumble of lines. If the signal frequency should change by more than 10%, it becomes necessary to readjust the sweep frequency to maintain a stable display. This need for constant adjustment

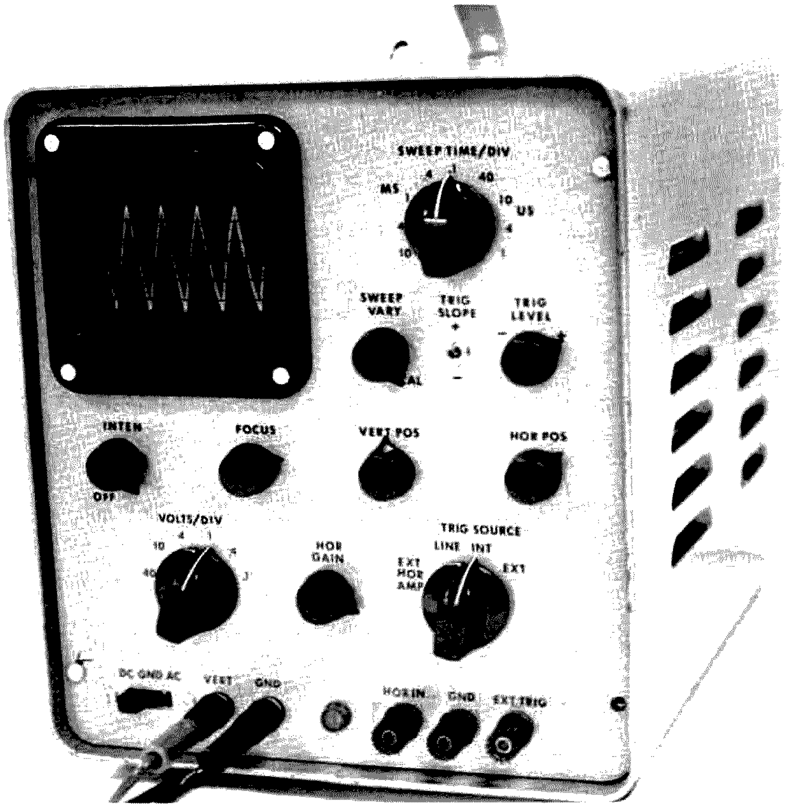

Oscilloscope front view.

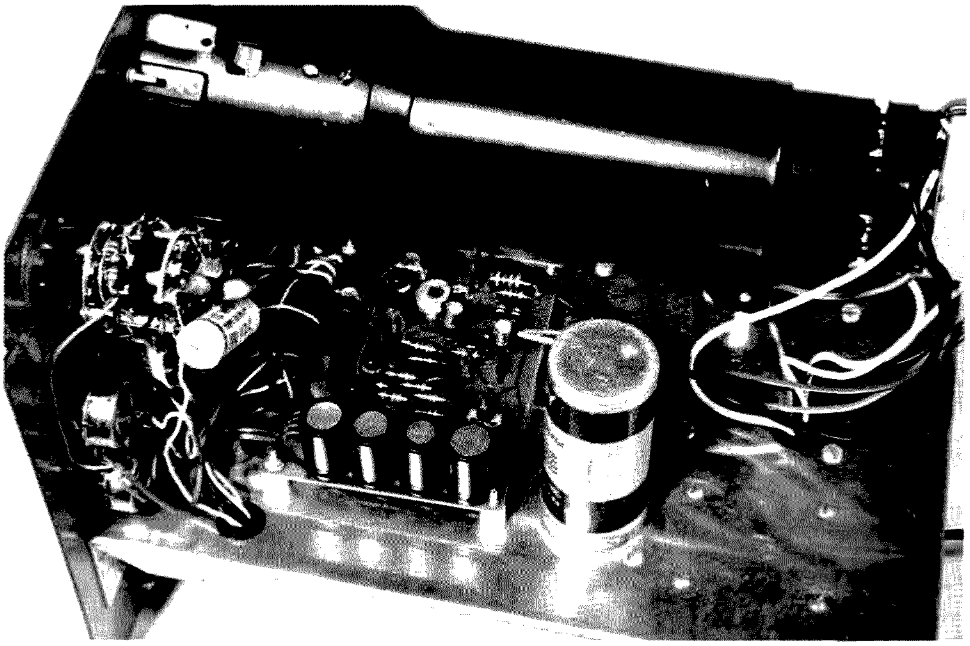

Inside top view of scope, showing sweep time switch S6 (upper left), main circuit board, and filter can C18.

makes it impossible to keep the horizontal sweep calibrated, so measurements of time and frequency cannot be made. The unijunction sweep can vary its frequency by a factor of about 2.5 in response to the input signal, so whole number ratios are always obtainable, and the display is stable for any signal frequency down to one half the sweep frequency, with never any need for adjustment. The result is a sweep which behaves very much like the laboratory scope's triggered sweep – Fig. 1(c) – with about one fifth the complexity. The difference is apparent only if you try to display a small portion of a cycle or a single shot phenomenon, such as a relay closing.

Our scope also includes a calibrated vertical amplifier and timebase, and triggering controls like the lab scope's, making it a versatile and accurate measuring instrument.

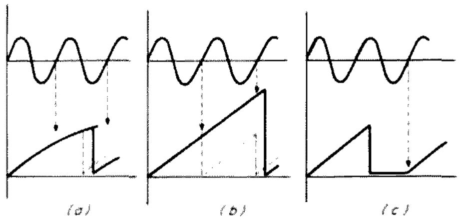

Fig. 1(a). The recurrent sweep generator can be restarted only about 10% sooner than full run-up time. The first triggering opportunity (downward arrow) may come too soon while the second comes too late, so each succeeding ramp shows the sine wave signal at a different horizontal position on the screen. Also, the ramp is usually curved, rather than linear, resulting in a distorted display.

Fig. 1(b). The unijunction sweep can be restarted after only 40% of a full run-up. Either the first or the second restart command could be obeyed, and either would result in a stable display. The ramp is perfectly linear.

Fig. 1(c). The lab scope uses triggered sweep – the ramp does not restart of itself, but waits for a triggering command derived from the displayed signal. The circuitry to achieve this is usually quite complex.

The circuit, which was designed to be absolutely as simple as possible, is shown in Fig. 2. It consists of dc coupled vertical and horizontal amplifiers, a sweep generator and four power supplies.

Vertical Amplifier

This is the "voltmeter" portion of the oscilloscope. It consists of an FET-bipolar Darlington pair, Q1-Q2, which provide a high input impedance and a low enough output impedance to drive the high gain, high voltage common base amplifier, Q3. Overall gain is about 150, variable by R4. C3 shunts extra signal to the Q3 input at high frequencies, thus extending the amplifier's frequency response to 600 kHz. D1 protects the gate of Q1 from accidental input overvoltages. The various values of RA and RB provide for division of the input voltage by factors from 1 to 400, giving voltage ranges of 0.1 V to 40 V per quarter inch division. CA and CB are required to compensate for stray capacitance in the resistors and switch wiring at high frequencies. CA is adjusted so that $X_{CA}/X_{CB} = R_A/R_B$ (i.e., the voltage division ratio of the capacitors equals that of the resistors). At frequencies above about 10 kHz, it is actually the capacitors and not the resistors which set the voltage division ratio.

Horizontal Amplifier

This is normally driven by the sweep ramps, causing a left-to-right trace across the screen, but it may be driven by an external signal to obtain *Y vs. X* rather than *Y vs. time* graphs on the screen. Q4 is a source follower, providing a high input impedance while driving differential amplifier Q5-Q6. C6 is selected for optimum frequency response.

Sweep System

Q7 and Q8 comprise a Schmitt trigger, which produces square wave outputs regardless of the shape of the input triggering signal. These square waves are given extremely sharp corners by switching transistor Q9. C9 differentiates the square waves, giving a sharp spike at B2 of Q11 each time the Schmitt trigger switches. Q10 is a current source, which charges one of the timing capacitors, C10-C13. When the capacitor is charged by a constant current, the voltage across it rises at a constant rate, thus generating the required linear ramps. When the voltage from the emitter to B1 of the unijunction reaches approximately 75% of the B2-B1 voltage, the unijunction fires, E becomes momentarily a very low resistance path to B1, and the timing capacitor discharges very quickly.

Synchronization of the sweep ramps to the input signal is accomplished by the negative spikes from C9, which lower the B2-B1 voltage to slightly less than half its normal value for very

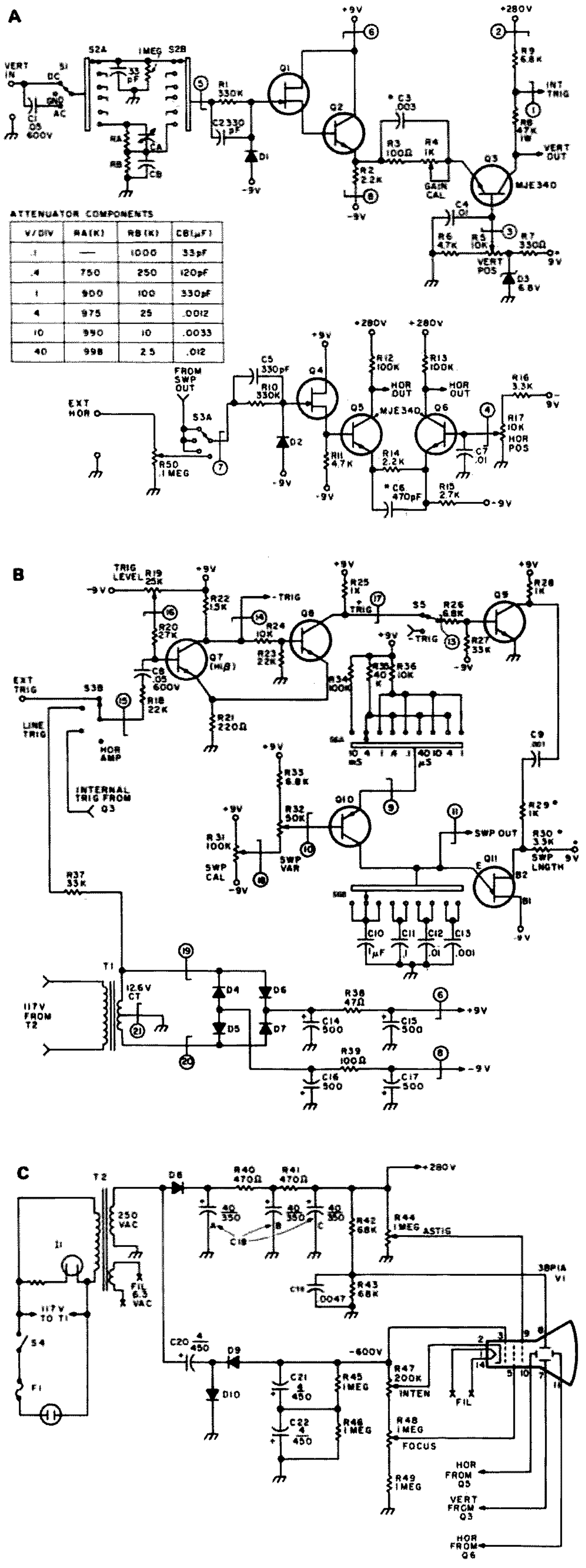

ATTENUATOR COMPONENTS

V/DIV	RA(K)	RB(K)	CB(μF)
.1	—	1000	33pF
.4	750	250	120pF
1	900	100	330pF
4	975	25	.0012
10	990	10	.0033
40	998	2.5	.012

Fig. 2. (a) Vertical and horizontal amplifiers for the simple oscilloscope. (b) Sweep system and low voltage power supplies. (c) High voltage power supplies and CRT circuit.

Vertical

Bandwidth — Dc to 600 kHz (-3 dB point)
Sensitivity — 0.1 V to 40 V per quarter inch division, calibrated in a 1-4-10 sequence
Input impedance — 1 megohm shunted by approximately 33 pF

Horizontal

Sweep — 1 usec to 10 ms per division, calibrated in a 1-4-10 sequence, variable to 500 ms per division
Trigger — 0.5 division p-p internal; 1 V p-p external; ac coupled
External Amp — Sensitivity continuously variable to 0.5 V per divison; bandwidth dc to 100 kHz

Table 1. Specifications.

short intervals. This gives the unijunction an opportunity to fire on command from the Schmitt trigger, provided that it has completed about 40% of a full run-up. R30 sets the full run-up ramp voltage, which should be about 2.5 times the voltage required for a full sweep of the screen. R29 sets the minimum ramp voltage, which should be just sufficient to drive the beam across the screen.

Power Supplies

Two full wave rectifiers followed by pi-section filters provide +9 V and -9 V to power the sweep system and low level amplifiers of the scope. The +280 V supply powers the output stages of the vertical and horizontal amplifiers, providing sufficient voltage to deflect the beam fully across the screen. A half wave voltage doubling supply produces -600 V which is applied to the cathode of the CRT. The overall accelerating potential from anode to cathode is, therefore, in the vicinity of +800 V.

Construction

Few of the components in the scope are critical and many substitutions are possible. The transistors may be nearly any silicon small signal types, with the exception that Q3, Q5, and Q6 must be rated at 300 V or more Vcer. The timing resistors and capacitors and the input voltage dividing resistors should be selected quite carefully, as these determine the ultimate accuracy of the instrument. It is not necessary that these components be the exact values specified, but only that they be in the same ratios. For example, if C10 is 6% high, C11-C13 should also be 6% high.

Many types of CRTs similar to the 3BP1 may be employed if the differences in base pin connections are noted. 3RP1s, 3EP1s, 3ACP11s and 3FP7s have been used with equal success, and there is nothing to prevent the use of 2-inch or 5-inch types. A number of flat-faced CRTs such as the 3RP1A and 3WP1 are available at somewhat higher cost for those who want to add the final professional touch to the scope.

The magnetic fields from the two power transformers will cause severe ripple on the CRT trace if special precautions are not taken. The transformers should be mounted with their windings in the plane of the CRT face so their magnetic lines of force travel with the electron beam rather than across it. The transformers should be mounted as far away from the CRT neck as possible, and, if available, sheets of mu-metal shielding should be placed under the transformers and around the CRT neck. The cleanest trace will be obtained if a full CRT shield can be obtained from one of the surplus houses.

All wiring involving vertical and sweep signals should be as short and direct as possible. In particular, the vertical input and vertical output wires should be kept away from each other and from other circuit wires. Note that the vertical input atten-

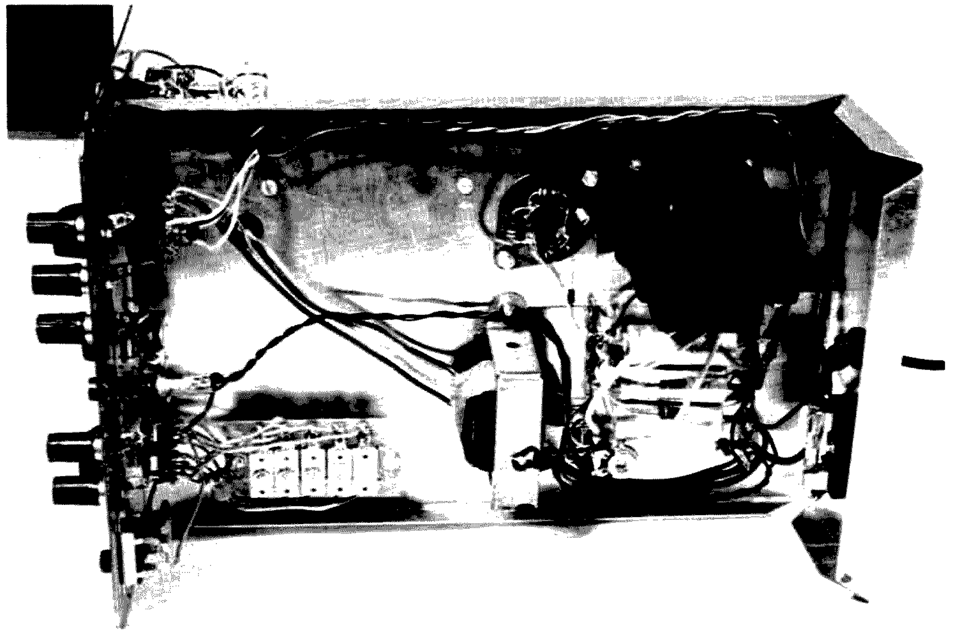

Inside under-chassis view showing function switch S3 (upper left), input attenuator with trimmer capacitors CB mounted (lower left), LV transformer T1 (bottom center), HV filters C20-C22 (lower right) with astigmatism trimmer R44 immediately below, and HV transformer T2 (upper right).

uator board is mounted directly behind the vertical sensitivity switch so that the wiring can be kept short.

Testing

It is suggested that the low voltage power supplies be wired to the circuit board first, with the high voltage transformer secondary left disconnected. The sweep circuit can then be tested without danger of shock or damage to the transistors from the high voltage supplies. Ironically, the best instrument for testing and troubleshooting the oscilloscope is another oscilloscope, but if none is available a VOM can be made to do. The output of the Schmitt trigger should switch from +2 to +9 V as the trigger level control is rotated. On the 10 ms/div range it should be possible to see the VOM follow the rise and fall of the sweep ramps if the sweep variable control is used to slow them down to a few sweeps per second. The outputs of the vertical and horizontal voltage followers (tops of R2 and R11 respectively) should rise and fall by about 1.2 V when a 1.5 V flashlight cell is connected in (first) positive, then negative polarity to the amplifier inputs.

Next, the +280 V supply should be connected and the vertical output should be checked for a swing from +75 to +250 V as the vertical position control is rotated. The two horizontal outputs should swing from +100 to +200 V, one going up as the other goes down, when the horizontal position control is rotated. If the two horizontal output voltages do not become equal at about +150 V, it may be necessary to alter the value of R15 to achieve proper balance. Finally, the -600 V supply can be connected and an attempt can be made to get a trace on the CRT.

Calibration

After the trace is focused and aligned, R30 can be selected to provide a maximum trace length of about 2.5 times the CRT width. Then R29 is selected to make the minimum length equal to the CRT width. These values depend on the characteristics of Q11. The trace length is changed from maximum to minimum simply by changing the frequency of the observed signal, or by adjusting the sweep variable control.

The vertical gain is set by adjusting R4 for a 3.9 division shift in the trace when a fresh flashlight battery (1.55 V) is connected with the scope on the 0.4 V/div scale. Next, a 1 kHz square wave is displayed and the five CA trimmers are adjusted for the cleanest display with no rounding or overshoot of the square wave corners. A square wave of about 50 kHz is then displayed and C3 is selected to make the corners of the wave as square and as sharp as possible without overshoot. Then a 10 kHz square wave is applied at the external horizontal input and C6 is selected so that the display consists of two sharply defined points at the left and right of the screen (the points will be elongated horizontally if the value of C6 is wrong). Finally, a 60 Hz ac signal is displayed (the one from the scope's own 12.6 V transformer will do nicely), and the sweep calibrate control is set so that one full cycle

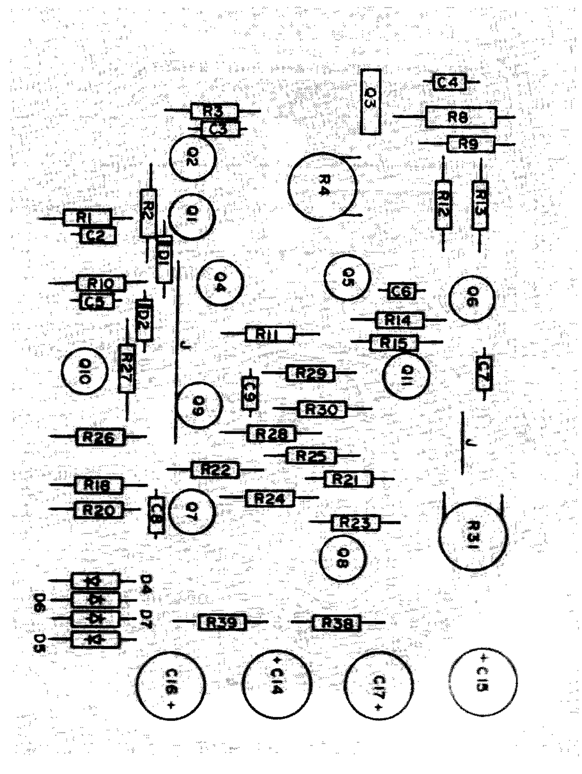

Fig. 3. Component placement on the main circuit board, top view. Note the two jumper wires, J.

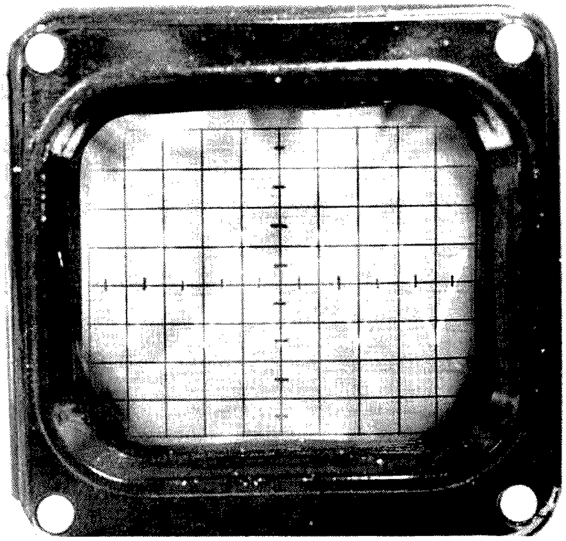

Linearity of trace is demonstrated by this photo of a 5 kHz triangle wave on the 0.1 ms/div range.

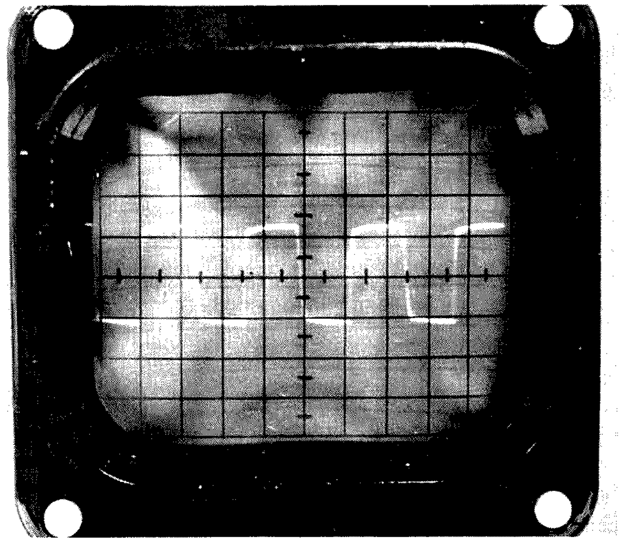

Photo of a 100 kHz square wave taken on the 4 usec/div range shows clean high frequency response and good calibration accuracy.

(16.7 ms) occupies 4.2 divisions on the 4 ms/div range. ■

Parts List

C1, C8 – 0.05 uF, 600 V disc capacitor
C2, C5 – 330 pF disc capacitor
C3 – Select for best vertical frequency response
C4, C7 – 0.01 uF disc capacitor
C6 – Select for best horizontal frequency response
C9 – 0.001 uF disc capacitor
C10 – 1 uF, 50 V mylar capacitor
C11 – 0.1 uF, 50 V mylar capacitor
C12 – 0.01 uF mylar capacitor
C13 – 0.001 uF mylar capacitor
C14-C17 – 500 uF, 25 V vertical mount electrolytic capacitor
C18 – 40 + 40 + 40 uF, 450 V three section can electrolytic
C19 – 0.0047 uF, 500 V disc capacitor
C20-C22 – 4 uF, 450 V electrolytic capacitor
CA (0.4-40 V scales) – 100 pF miniature compression trimmer capacitor, total of 5 required
CB – 0.1 V scale: 33 pF disc; 0.4 V scale: 120 pF disc; 1 V scale: 330 pF disc; 4 V scale: 0.0012 uF disc; 10 V scale: 0.0033 uF disc; 40 V scale: 0.012 uF disc
D1-D2 – silicon signal diode, 1N914 or similar
D3 – 6.8 V, ½ Watt zener diode (HEP Z0215 or equivalent)
D4-D7 – 100 PIV rectifier (HEP R0051 or similar)
D8-D10 – 1000 PIV rectifier (HEP R0056 or similar)
F1 – ½ A slow blow fuse
I1 – 117 V pilot lamp assembly (NE-2 bulb with 68k resistor)
Q1, Q4 – 2N3819 N-channel junction FET
Q2, Q7, Q8, Q9 – 2N3569 Si NPN transistor (or similar)
Q3, Q5, Q6 – MJE 340, 2N3440, or similar 300 V 1 W NPN transistor
Q10 – 2N3638 Si PNP transistor (or similar)
Q11 – 2N4891, HEP 310, or similar unijunction transistor
R1, R10 – 330,000 Ohm, ½ Watt resistor
R2, R14 – 2200 Ohm, ½ Watt resistor
R3, R39 – 100 Ohm, ½ Watt resistor
R4 – 1000 Ohm, ¼ Watt trimmer potentiometer
R5, R17 – 10,000 Ohm, linear taper potentiometer
R6, R11 – 4700 Ohm, ½ Watt resistor
R7 – 330 Ohm, ½ Watt resistor
R8 – 47,000 Ohm, 2 Watt resistor
R9, R26, R33 – 6800 Ohm, ½ Watt resistor
R12, R13 – 100,000 Ohm, ½ Watt resistor
R15 – 2700 Ohm, ½ Watt resistor
R16 – 3300 Ohm, ½ Watt resistor
R18, R23 – 22,000 Ohm, ½ Watt resistor
R19 – 25,000 Ohm, linear taper potentiometer
R20 – 27,000 Ohm, ½ Watt resistor
R21 – 220 Ohm, ½ Watt resistor
R22 – 1500 Ohm, ½ Watt resistor
R24 – 10,000 Ohm, ½ Watt resistor

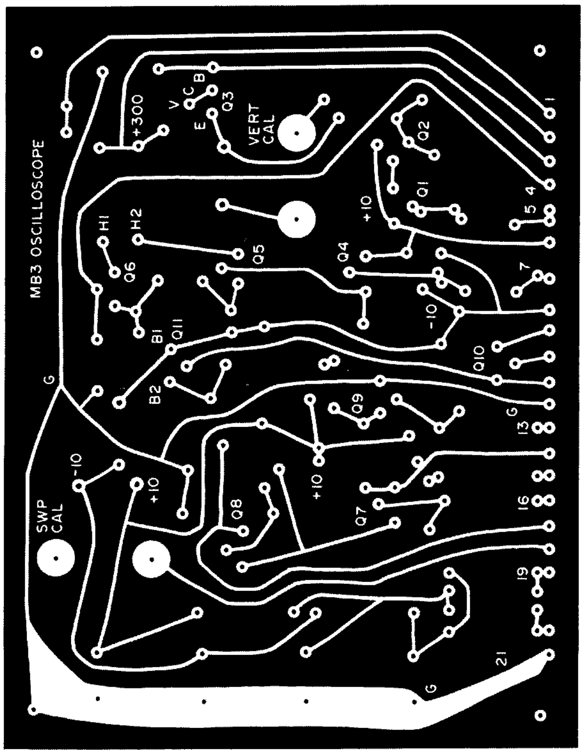

Fig. 4. Printed circuit artwork for the main board, bottom view.

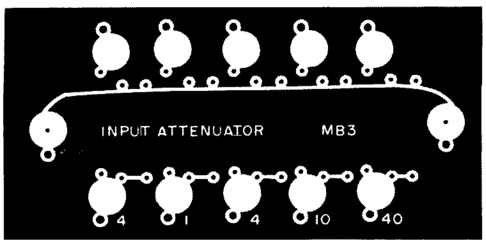

Fig. 5. Printed circuit artwork for the vertical input attenuator board. Voltage dividing resistors RA and RB are mounted on the copper side of the board with trimmer capacitors CA bridging across them between the large pads. Fixed capacitors CB are mounted on the opposite side of the board.

R25, R28 — 1000 Ohm, ½ Watt resistor
R27 — 33,000 Ohm, ½ Watt resistor
R29 — 100 to 2200 Ohm, selected for sweep length
R30 — 1000 to 5600 Ohm, selected for sweep length
R31 — 100,000 Ohm, ¼ Watt trimmer potentiometer
R32 — 50,000 Ohm, linear taper potentiometer
R34 — 100,000 Ohm, ±3% resistor
R35 — 40,000 Ohm, ±3% resistor
R36 — 10,000 Ohm, ±3% resistor
R37 — 33,000 Ohm, ½ Watt resistor
R38 — 47 Ohm, ½ Watt resistor
R40, R41 — 470 Ohm, ½ Watt resistor
R42, R43 — 68,000 Ohm, ½ Watt resistor
R44 — 1 mehohm, ¼ Watt trimmer potentiometer
R45, R46, R49 — 1 megohm, ½ Watt resistor
R47 — 200,000 Ohm, linear taper potentiometer with SPST switch
R48 — 1 megohm, linear taper potentiometer
R50 — 100,000 Ohm, linear taper potentiometer
Ra and Rb attenuator components, all ½ Watt carbon composition or film type resistors, ±3% tolerance — See Table 2
S1 — SPDT slide switch with center off position
S2 — 6-position, 2-pole rotary selector switch
S3 — 4-position, 2-pole rotary selector switch
S4 — SPDT switch (part of R47)
S5 — SPDT toggle switch
S6 — 11-position, 2-pole rotary selector switch (9 positions used)
T1 — 12.6 V center-tapped, 500 mA filament transformer
T2 — 250 V, 20 mA, 6.3 V, 2 A transformer
V1 — 3BP1A, 3 inch cathode ray tube
Chassis, cabinet, binding posts (5), CRT socket, line cord and plug, knobs (3 large, 7 small), CRT bezel and graticule, fuse holder, terminal strips, miscellaneous screws, grommets, and spacers

	RA	RB
0.1 V scale	none used	1 megohm
0.4 V scale	750,000 Ohm	250,000 Ohm
1 V scale	900,000 Ohm	100,000 Ohm
4 V scale	975,000 Ohm	25,000 Ohm
10 V scale	990,000 Ohm	10,000 Ohm
40 V scale	998,000 Ohm	2500 Ohm

Table 2.

Ham Help

I have a request for Ham Help. I need a service manual, or at least a schematic and specifications, for a Beckman Instruments electronic counter, Model 6020.

Blase J. Furfaro W7ISJ
10332 Camino De La Placita
Tucson AZ 85710

I'm looking for somebody who would help me in obtaining an amateur ticket. I am open for advice and help. I was hoping that someone could offer some type of course of study for me and when problems would arise I could contact him for help.

Peter Osroff
2442 East 26th Street
Brooklyn NY 11235
(212)-646-7757

I would appreciate any help in locating a schematic for a Singer portable TV, model number TV6U.

Would also appreciate schematics for BC-779 receiver and ART-13 transmitter.

Your magazine improves with each issue.

Harold D. Donaldson
8850 Phoenix Ave.
Fair Oaks CA 95628

I would appreciate some help in designing a communications device similar to the wireless broadcasters that seemed to be popular 10 or more years ago.

I am working with a group of hobbyists in putting on a large convention shortly. One of the major problems in managing a large convention is the communications area. We need to be able to contact key people immediately in emergencies. And, since this is a hobby group, the device should be cheap.

A base transmitter broadcasting an AM or FM signal through the hotel's 110 V power lines would serve adequately, since all that is needed to receive it would be a cheap pocket radio. A CB set might work, but the interference from competing stations is excessive. A simple wireless broadcaster using the 110 V line as a large antenna would seem easiest and cheapest.

However, circuits for such devices seem to have disappeared (or are no longer popular). Any help in design, suggesting references, etc., would be much appreciated.

David Lundy
18 Karen Drive
Cherry Hill NJ 08003

LETTERS

from page 19

don't like is the way they are going about it.

The only mention they make of this petition is in the Executive Committee Minutes, which few hams will actually read. This appears in a short paragraph on page 62 of the August *QST*, for those who might be interested.

I can only say that I am going to take some action on this. I will be writing to the FCC with my own comments on Docket 20282. I hope other hams and Novices-to-be will do the same. Wayne, since you agree with me according to your editorial, I hope you will also act. Let's nip this in the bud now.

Already I am getting involved in the politics of ham radio. I was licensed first as WN3FNT back in 1966. I was again licensed as WA3JDT/WB8FAR in 1967. I gave up ham radio to complete a degree in electrical engineering. I now want to return, and I see that the ARRL is again dividing ham radio into a class system. I don't like it. They are positive on Docket 20282 — yet are secretly trying to have it amended. This infuriates me very much.

Thanks for listening to me, and I hope some positive action can be taken.

Bob Hajdak
Youngstown OH

BOON

One of the big kicks that I get out of reading *73 Magazine* is your editorials. I do not agree with you all of the time and do agree with you some of the time, but I enjoy any controversy or debate on ham radio or the problems with frequency allotments and so forth.

The main reason for this letter is this: *I like CB radio* and I think that it is a great thing on the whole and am not going to let it get run down by some know-it-all amateur radio operators. I have had a CB license since 1961 and have been a licensed ham operator since 1962. I have sold and serviced CB sets since that time and had a 2nd phone commercial since that time, so I do have enough knowledge about it to be heard.

CB radio has emerged, in the last five years, to be a very strong system for emergencies on a local basis, and, recently, as a terrific extension of the eyes and ears of our law enforcement people. I can say that it is a boon to these people. After all, the quickest way to apprehend a criminal or thief is with the *cooperation* of the general public, and, with the advent of some very good organizations, such as REACT and some other fine groups, it has come to pass that we have an excellent and *speedy* means to inform, locate, advise and operate in a saner manner than ever before. I am glad to note that you have decided to tap the biggest reservoir of potential hams that exists today. An ardent CBer can be converted to an ardent ham, but not by slamming, ridiculing or looking down one's nose at him.

Now, as to the holier-than-thou attitude that *some* hams have, it is a slam to the whole fraternity to have him expound on the lousy CB activities. If *he* didn't pass his code test and/or exam, he would be the most skip and yakker worker in the CB group. There are a majority of fine CB personalities who would make a lot better hams than some whom I have heard on the ham bands. I have heard some stuff that makes me feel ashamed that I belong to this group, and no doubt the same goes for the majority of CBers.

So, in closing this tirade, let me say quit knocking CB and quit this I'm-better-than-you attitude, before we alienate the biggest group of potential hams available.

One more thing: I don't care a whit about microprocessors and fancy ICs and some of the stuff that you have in your magazine, but I tolerate it because it probably means something to the next guy, so I am willing to tolerate it and consider *73* and *QST* two of my favorite mags. I would not drop *QST* for the world either. So I am willing to fight for both of you . . .

Jack Golden WA2YPW
Portville NY

DOGGONE HOUNDED

Dag blasted you're right. I can't do it without your doggone tapes. My first thoughts were to try to copy W1AW, but QRM is bad, bad, bad. I tried other methods, but after reading comments from other frustrated hams I am going to try Uncle Wayne's 14 wpm tape. My XYL is hounding me to get on the General phone bands so she can get some of the nice recipes she has heard, not to mention the little QSOs with the other YLs on the

Continued on page 57

Jim Isbell WA5HLE
Rt. 1 Box 592
Leander TX 78641

Get on Six with Surplus

--the el cheapo RT-70 is a natural

The finished RT-70 modification ready for installation. Its small size and minimal power consumption make it ideal for mobile use, but for serious work you will need an "afterburner."

In recent months a large number of RT-70 transceivers have appeared on the surplus market at prices from $15 to $25. These transceivers are designed for the frequency band from 47 to 58.4 MHz and therefore completely straddle the 6 meter ham band. To find a surplus transceiver that doesn't require extensive changes to operate on a ham band, and is simultaneously cheap, is a real achievement that many hams would take advantage of if they knew for sure what the conversion entailed.

The RT-70 is an FM transceiver covering the entire 6 meter band in continuous tuning, and transmitting at 500 mW output. The receiver section is a very good unit as is and will operate alongside the best of them without modification. The transmitter section is equally good, but several peripheral modifications will make it more convenient to use.

The first thing that is noticed when an RT-70 is

first fired up with its original microphone is that the audio quality is unbelievably lousy in that it won't modulate at all. Apparently years ago the carbon buttons were good but they have now deteriorated, because even the "new" buttons that I bought for 3 for $2.00, still packed in a hermetically sealed package, failed to remedy the situation. Fortunately this problem is easily solved. A standard telephone handset can be used as the microphone by placing a resistor across the button to decrease the sensitivity. Without the resistor you can stand across the room from the handset and have enough audio to modulate the transmitter. The resistor value has to be individually selected according to the handset used. Mine required a 27 Ohm resistor. If you can get a handset with push-button in the palm you have a fine TR switch built-in.

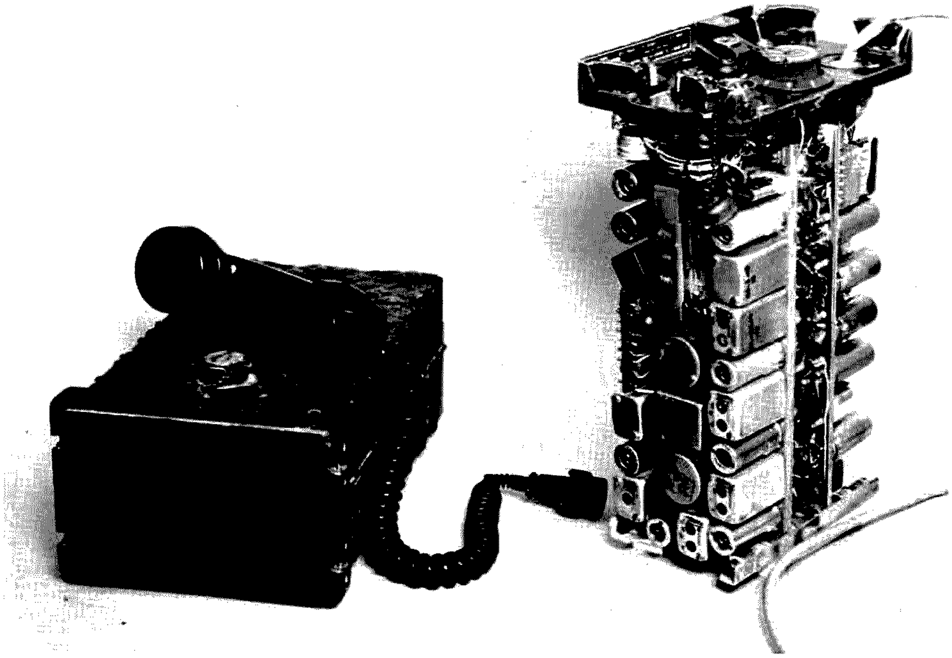

Left side and bottom view of the RT-70, showing the "Tank, Field, Veh" switch, S101, on the left side, in the "Veh" position. Look closely, just below the crystal Y-102, to see the regulator chip installation as described in the text.

Since some of the RT-70s being sold come without schematics, I will include partial schematics to illustrate the hook-ups. Fig. 1 shows the audio plug and connections to the handset. Place the resistor inside the handset on the terminals of the carbon button itself. Later in this article, I will show how to add a switch to turn off the earphone in the handset for speaker operation. Note that in most handsets the ground lead from microphone, earphone and TR switch are common and a single wire. This wire can connect to either pin H, pin E or pin B as all are grounded inside the set.

Finding audio plugs for the TR-70 is not as hard as finding power plugs; therefore, I have elected to modify the power input to use a piece of five conductor cable that can have any type of connector you like mounted on the outboard end. The modification is easy and works fine. Take a 5/16" drill and drill out the center of the present connector. Push the end of your 5 conductor cable through this hole, tie a knot in it and connect the five wires as follows (see Fig.2):

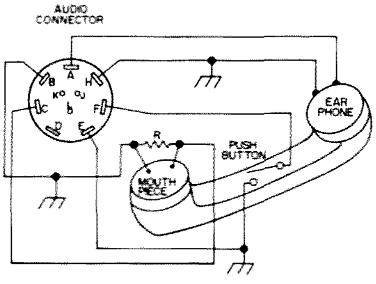

Fig. 1. Audio plug connections.

Connect the red one (if you have a red one) to pin J for the 90 V dc input. Next, connect the black one (again, note in parentheses above) to pin D for the ground. The remaining three wires are connected to pins B, F and A. But, prior to soldering to pin B, remove the wire already on that pin and place it on pin F along with the fourth wire in the cable. Now with the addition of a Fairchild 7806 regulator chip which will be described later, you can use the set with any voltage from 6 to 15 V dc. The Fairchild 7806 regulator chip is a 1 Amp 6 V regulator, all in one three head package with a mounting tab. The mounting tab is in most cases identical electrically to the center lead. Check your unit *first*, and if this is the case, the center lead can be cut off. Next, looking at the bottom of the chassis, you will see J1 mounted on the right side with two screws. Remove the nut on the screw toward the front of the chassis. Take a knife and scrape the protective coating from the chassis in a circle about 1/2" diameter around the screw. Now place the tab of the regulator over this screw so that the center lead of the regulator is pointing directly at the chassis mounting nut that holds the front panel on. This center lead may touch the nut, but no harm is done as this lead is grounded. The other two leads must be bent away from the chassis to avoid contact. Now replace the nut and tighten the regulator in place. This mounting will act as both ground and heatsink for the chip.

Now, using the diagram in Fig. 3, connect the input lead of the regulator to pin B on the power connector and the output lead to pin F of the power connector.

Now in operation, if you have a 6 V filament supply it can be connected to pin F (or

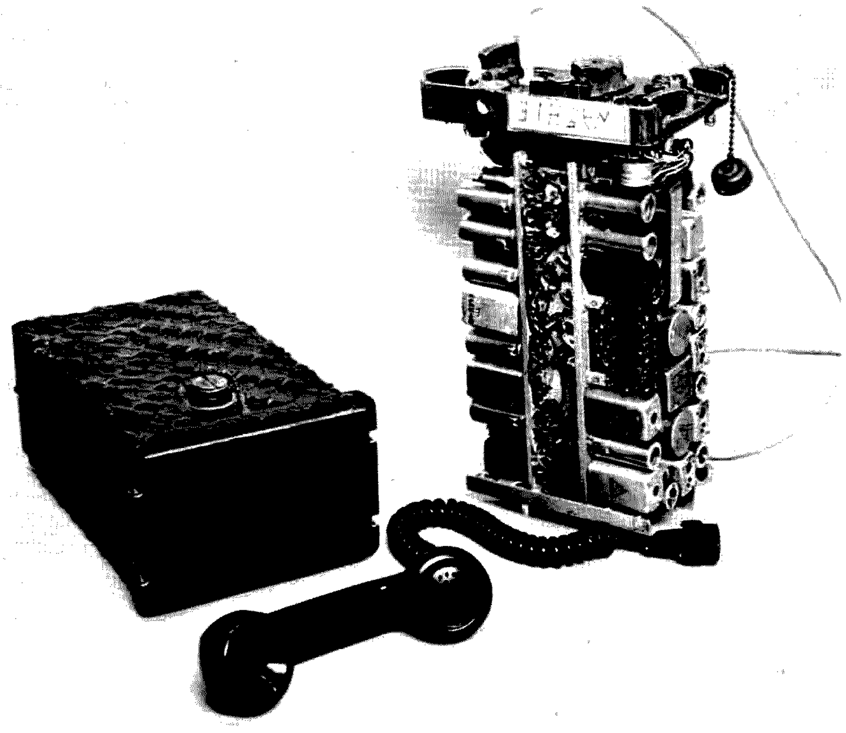

Left side and top view of the RT-70, showing the antenna connector on the end panel, and most of the tuning adjustments for the transmitter.

the cable conductor connected to pin F), while a filament supply of 8 to 15 V should be connected to pin B. Do not try to run a 6 V input through pin B and thus the regulator, as there is a 2 V drop in the chip which will result in a 4 V filament voltage, and the set will not operate on 4 volts. Also, do not connect both a 12 V and a 6 V supply simultaneously: You may blow the chip. And a final caution: Do not use ac filament voltages. The chip doesn't like ac, and neither do the filaments. Ac just will not work, so don't try it.

This regulator is an important addition, as the filament voltage is very critical for proper operation. A 5.5 V filament will cause a reduction of transmit power of 50%!

There is a switch, S101, on the left side of the receiver chassis. This switch is primarily used to compensate power supplies to hold the current drain constant during both transmit and receive modes. If correct drain is a problem, put it in the "field" position and then use a very well regulated 90 V supply capable of regulating from 30 mA to 80 mA. If on the other hand you have a good supply of 90 mA at anything from 90 V to 120 V dc, you can put the switch in the "Veh" position and use a dropping resistor to drop the voltage to 90 V. I used a surplus Sorensen power supply with an output of +107 V and a dropping resistor of 200 Ohms. The dropping resistor is calculated using the formulas in Table 1, and then adjusted to get what you want using a voltmeter.

I finally used a 200 Ohm 3 Watt resistor. Since the switch S101 is in "Veh" position the current remains nearly constant and the drop on the resistor remains constant.

The final three modifications I will describe are primarily convenience mods and not absolutely needed. The set will now run having made the modifications already described. Remember, FM on 6 meters is allowed only on the upper portion of the band. You can set the "preset" stops to mark the band edges, or use one of them for the local frequency.

If you use the set mobile, you will need a dial light. The one in the set is a 331 and is useless. Remove the bulb and replace it with a 328; then, in order to get the correct voltage on the tube, "short" out R-206. R-206 is mounted on the back wafer of the "Cal, Ant" switch, S-202, on the front panel. The resistor can be identified by its code, as it is an 82 Ohm resistor. Merely solder a piece of wire across it and your dial light is ready.

This modification is a matter of preference, but if you are to make the next modification, this one precedes it. The present antenna connection is on the front panel. I like mine on the back, so I moved it back. Remove the BNC connector and mount it on the chassis on the right side just above V1-1, in the aluminum web that supports the chassis mounting screws (see Fig. 4). Then drill a 3/8" hole in the cover so that when the set is in the cover the BNC antenna connector protrudes through the back. Now, using a miniature 50 Ohm coax such as RG-188A/U, connect the new antenna connector to the feedthrough originally connected to the front panel

R = E/I, where I is the current required to operate the unit (approximately .079 Amps) and E is the voltage of the power supply less 90 V.

Example: 107 – 90 = 17 volts = E

R = 17/.079 = 215 Ohms

P = E x I

Example: P = 17 x .079 = 1.3 Watts

Table 1.

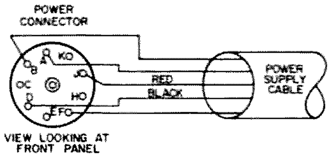

Fig. 2. Power cable connections.

connection. The shield should be grounded at both ends and placed in the channel runway along the housing of C-10.

Now, using the hole the original antenna connector came out of, put a single pole, single throw toggle switch in the front panel. Remove the red wire from pin A on the audio connector and connect it to one of the switch contacts; connect the other contact to pin A. Now you can disable the earphone in the handset to allow more volume in the speaker for monitoring when you are across the room, or for use when others in the car or shack want to hear both sides of the conversation, without blowing your ears off with the handset!

There are two further modifications that are possible on the RT-70. However, these are specialty items, and I won't go into great detail on them.

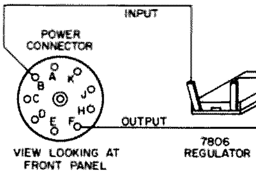

Fig. 3. Addition of regulator.

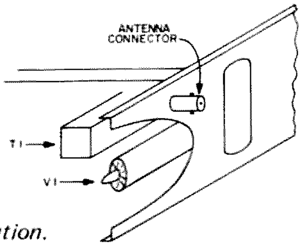

Fig. 4. New antenna connector location.

First, since this is an FM transmitter, a "cheap and dirty" amplifier can be placed on the output using a TR switch and rf power transistor to achieve 5 Watts or so in one stage.

Secondly, the RT-70 is ideally designed to use on a repeater. Since the transmit frequency is the sum of the variable local oscillator in the receiver and a 15 MHz transmitter oscillator, a change in the frequency of the 15 MHz oscillator allows the transmitter to be separately tuned. To operate on a repeater, it is only necessary to change the crystal in the 15 MHz oscillator/*doubler* (the crystal is 7.5 MHz– bear this in mind when calculating the transmit/receiver offset). Thus you will have a transmitter that tracks the receiver, offset from the receiver by a previously determined frequency difference.

Final notes: All these modifications work equally as well on the RT-70 as on the RT-70A, but, in selecting the unit, try to get an RT-70A. They usually are newer and in better condition. Second, don't pay extra for the 1 MHz crystal in the calibrator unless it is real cheap. Some places con you for $5.00 and you don't really need it at any price! It is nice for tuning up, but not at $5.00. And finally, try to get a manual. They are worth the price if available. The manual describes a complete tuning and maintenance procedure, as well as the equipment. It is one of the best equipment manuals I have ever seen.

If you can think of any other mods that would be helpful I would like to hear from you, and I will keep a file on any "new" mods that I will trade for your suggestions if you send an SASE. ■

The Beam Saver

-- rotor memory system

Robert E. Bloom W6YUY
8622 Rubio Avenue
Sepulveda CA 91343

This article is directed mainly at the ham who has had antenna rotator damage due to high velocity wind gusts. There is also information for anyone planning to purchase an antenna, tower, or rotor. In the main, I will present a modification for the Cornell Dubilier TR-44 antenna rotor that will automatically return the antenna to a pre-determined antenna azimuth or arc segment. This system is not limited to the TR-44, however.

I live in the San Fernando Valley of Southern California. During the months from February through April there are portions of this valley that have winds known as the Santa Anas. These can last for several days, carrying with them gusts from 20 to 85 knots. After each of these storms, one can drive down side streets and encounter a large number of twisted towers and beam antennas.

Many of the hams suffering damage could not believe this could happen to their structures, since they appeared robust enough to stand twice that wind velocity. Many hams purchase rotors, towers and antennas with hearsay information as to their structural wind strength, while other hams use the overkill theory. A tower designed for an antenna wind resistance of 2.5 to 5.0 square feet at 100 mph can have the tower twisted like a corkscrew with gusts of less than 50 to 70 mph.

After reading some of the latest specs from C.D. on the TR-44 and Ham M-2 rotors, I was surprised to see that they are rated for only 2.5 square feet and 7.5 square feet respectively. In this light it appears that a large percentage of hams are overloading these units with stacked beams that can easily be rated for wind ratings of 15 to 20 square feet or more. My tower is an aluminum 40' self-supporting structure capable of sustaining a 100 mph wind while decked with a 5 square feet array less than 1.5' above the top of the tower. The rotator is a TR-44. The antenna is a 4 element widely spaced 15 meter beam with a 3" diameter boom. After the first 35 mph wind, I guyed the tower. A subsequent wind broke one of the guy lines. I am sure that if the motor had had a strong brake the tower would have torqued sufficiently to have snapped. I had believed the many hams who had advised me that the TR-44 gear ratio would prevent the antenna from turning during exceedingly high velocity winds. Besides, the rotor would not turn beyond the end stops. Well, my coax was wrapped 5 times around the chrome molly mast post. Theoretically, the rotor cannot go beyond 360° because protrusions built into the casting come into contact with a hard drawn steel lever made of angled steel in the shape of a U channel. This strikes end stops, which are also built into the stationary part of the casting. I do not know how many pounds or tons of torque was created by the wind, but this piece of steel looked like it was on the losing end of a battle with a punch press.

With this background, we have arrived at the meat of the subject. How do we prevent this from reoccurring without having to replace everything with beefed up specs? A braking system had been contemplated at some length, but the prospect of having the tower torqued in half was quite evident. WA6MVP suggested the design of an electronic servo system with rubbery limits. The system in Fig. 1 is the result.

A breadboard model was devised to determine the circuit feasibility. A 500 Ω wirewound potentiometer and bench supplies were used to depicket the TR-44 rotor and control box. After being assured that the design was sound, most of the components were mounted on a 2¼" x 4½" universal PC board. Essentially, what is required are two 12 or 24 volt dc three pole double throw surplus relays, two inexpensive 741 op amps, or a single dual pack 747 IC, two 1N4004 diodes, two 10k Trimm potentiometers, three transistors (two used as relay driver switches and one as a B+ pass transistor), and one double pole double throw

toggle switch.

Let's first look at the Cornell Dubilier control unit schematic as redrawn for better understanding. The uncircled numbers are those that appear on the C.D. schematic. Those circled are those that appeared on the particular relays used in my unit (I found some new surplus, very small 4PDT 24 volt units at 75¢ each). The lever switch on the control unit essentially does two things: It applies line power to the power transformer primary only when moved to the left or right position, and it also applies 26 volts ac to one or the other split phased windings of the rotor motor. (One winding causes the motor to rotate counterclockwise, and other winding changes the direction to clockwise.) Incidentally, if you have had your rotor for some years and it only rotates with much persuasion, you most likely have a defective motor phasing capacitor. This capacitor is a nonpolar electrolytic. The electrolyte dries out after a time and the capacity is insufficient to change the phase of the current sufficiently. A good substitute is to purchase computer-grade capacitors of twice the capacity and connect them back to back. Remember that the 50 volt rating on the original capacitor has an ac rather than dc rating. As the ac voltage is a peak-to-peak, the formula becomes RMS x 2 x 1.44. However, if the capacitors are placed back to back, each of these would have a rating of 1.414 times the RMS value.

One of the first things that came to my attention on the C.D. unit was the amount of heat generated in the 300 Ω zener current limiting resistor. When the control unit is *on* for a prolonged period, both the 300 Ω resistor and zener will blister the fingers if touched. This current measures approximately 90 mA. The regulated 14 volts only supplies 1 mA to the

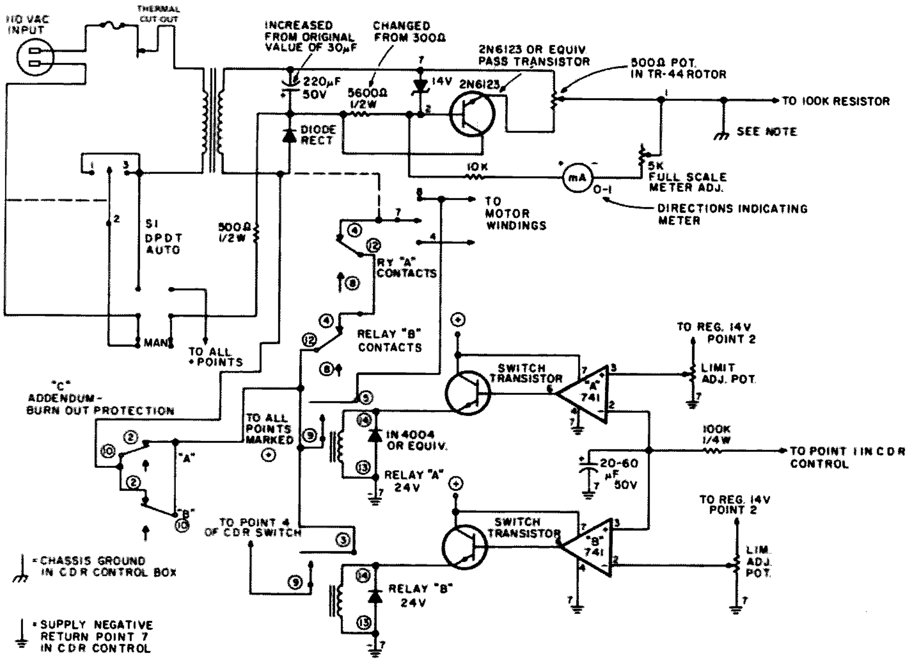

Fig. 1. S1 is shown in the manual position. Dashed lines represent wiring changes in the original circuitry. Relays A and B are shown in the de-energized position. Numbers not circled identify portions of the C. D. R. schematic. Numbers circled identify the terminal numbers on the particular relays used by author.

direction indicating meter, and about 30 mA to the 500 Ω pot located in the rotor housing, with the balance apparently used in biasing the zener. It isn't any wonder that the zener and its associated resistor get hot.

To operate the modified unit during a wind period, power must be applied to the transformer primary on a continuous basis. The zener and resistor are not rated to stand this kind of duty cycle. Therefore, a modification was incorporated to relieve this condition. A flat pack pass transistor, type 2N6123, was used. This transistor capability is like using a steamroller to crush a cinder. However, it is inexpensive, small and a heat sink is not required. This transistor has a minimum beta of 20 – thus the zener now only has to supply 1/20 of the current previously required. The 300 Ω resistor is now replaced with one of approximately 5.6k, and the zener still directly supplies the 1 mA maximum current to the azimuth indicating meter and biases the base of the pass transistor.

Notice that the 14 volt supply is a voltage source for the azimuth potentiometer. This pot acts as a variable voltage divider of zero to 14 volts; the 1 mA meter (1000 Ohms per volt) has a fixed 10 kΩ and variable 5 kΩ for full scale adjust. The 1 mA meter is set up to precisely indicate the source voltage.

Now let's look at the servo circuit. Note the two symbols for ground. This is not meant to confuse, but to identify two separate negative returns. The voltage negative return circuit of the control unit C.D. number "7" does not go to chassis ground, so do not make it a chassis ground when you make up your module. Note also that the only thing that goes to chassis ground in the control unit is the rotor of the azimuth pot. When this pot is in the most CCW position, its variable tap is at the "7" point or supply negative. In the opposite or clockwise position, point "2" is +14 volts. This variable ground potential point "1" is used as an offset voltage on pin 2 on op amp "A" and pin 3 on op amp "B." Note that this voltage is fed through a 100k resistor and junctions with a 20 uF capacitor. The capacitor takes time to build up and also takes time to drop its voltage. This makes for a hysteresis and allows the rotor to continue through and coast beyond the electrical limit. The outputs of the op amps are amplified by the emitter follower relay drivers A and B, which actuate either relay "A" or "B." Note that if 24 volt relays are used it may require about 18 volts for actuation. The relay energizes the proper motor winding and turns the antenna back to the initial point. You might ask why the motor doesn't just correct a few degrees and the relay drop out. The hysteresis introduced by the 20 uF and 100k resistor add a time delay, slowing down the buildup and drop-off of the op amp offset bias voltage. When you first try the unit, it is conceivable that the rotor will turn in the opposite

direction from that desired. In this case, just reverse the relay contact wires going to switch points 4 and 8. Circled relay contacts 4, 12 and 8 on both relays are connected in such a way as to prevent inadvertent manual control when SW-1 is in the automatic position. The manual position causes both relays to take a de-energized position and the control unit is now ready for conventional manual control.

For the initial adjustments, you must determine in which direction you want the antenna pointing. When in automatic, manually position the antenna to this position. Now determine the leeway on each side of this position. Set the antenna to the CCW limit point and adjust the appropriate limit potentiometer until its associated relay energizes. It might be well at this point to jumper the 100k resistor, as this shorts out the delay. The correct setting can thus be found more readily. Now manually move the antenna to the opposite limit point and adjust the second limit potentiometer for actuation of the second relay. With the servo main switch in the automatic position, the antenna should correct to the predetermined direction. Both relays are now de-energized. Switch contacts 4 and 12 of both relays should be in the position as shown in the schematic. Although the switch mode has been set for automatic, the manual control lever on the control head will respond, opening the 4 and 12 contacts on that relay. Manual control is lost until the servo is again balanced.

Protection circuit "C" was added to prevent damage to the rotor motor should a component fail. Connect contacts 2 and 10 as shown. This circuit prevents having motor driving voltage on both the motor phased windings, should a circuit failure close both relays simultaneously.

The entire servo section is built on a canned PC board or any board type you desire. The board size is approximately 2¼" x 4½". The board is then mounted in an aluminum box approximately 5" x 2½" x 2", depending on the relay size. You might want to set the control unit on top of the servo system, in which case you should use a box with length and width compatible with the control unit base. The 741s have 8 pins, so both can be plugged into one IC socket (unless the dual pack is used). The manual autoswitch is the only control on the box. Wires emanate from the back through a grommeted hole. If 12 V relays are used, the 500 Ω ½ W current limiting resistor can be increased in size, or two resistors in a voltage divider circuit can be employed.

Unfortunately, the transformer in the control head, although large and visibly husky, was not designed for continuous duty. Mine was so hot after about 5 hours that it was painful to touch. The overload circuit breaker, a temperature-activated device built right into the transformer, did not cut out. The secondary winding is of very heavy wire, but the primary saturates the core while only loading about 80 or 90 mA. The replacement transformer I used is a 24 volt 2 Amp unit normally used to operate a latching relay in a garage door operator. This transformer is less than three fourths the size of the one in the control unit — yet is only slightly warm after a 24 hour duty cycle. Fortunately, there are any number of units available from electronic surplus houses throughout the country.

The prolonged detail of this article is intended for the less technical ham. The more technical ham may just need the schematic diagram.

My thanks to Doren Rozenthal WA6MVP for his suggestions and assistance. ■

J. Schultz K3EZ
Box L
FPO New York 09544

Updated Universal Frequency Generator

--extremely versatile test unit

The original article on the "Poor Man's Universal Frequency Generator" appeared in *73* for July, 1974. It has generated a great deal of reader response and it was considered worthwhile to review the instrument again and see if it could't be made even more reliable and versatile.

Basically, the generator is a collection of IC oscillators and dividers that can generate square waves from the HF range all the way down to the sub-audible AF range and can generate markers all the way into the VHF range. There is nothing sophisticated about the generator, and some of its function can be performed today by more advanced ICs with even greater versatility. But, the generator is hard to beat as a simple straightforward device that can be built at a very low cost (none of the ICs costs more than $1.00, except for one optional $3.00 type). It makes an excellent little project for those who still haven't started to experiment with digital ICs.

The uses for the generator, as suggested in the original article, are about as versatile as those of a grid-dip oscillator. Also, like such an oscillator which is not a very advanced type of instrument today, one nonetheless always keeps on discovering new and handy uses for the instrument. The broad uses still include: frequency marker generation, generation of crystal-stability RF or AF square wave signals, crystal activity checker, range extension for present AF or RF generators and a divider chain to allow HF oscillator stability and calibration to be checked by a low frequency receiver for those who lack a counter.

The block diagram of the updated generator is shown in Fig. 1. It consists of a selectable oscillator section, a fixed string of divide by 10 stages, and two divider stages which can be switched in at various points along the divide by 10 stages. The first oscillator is a 1 MHz crystal-controlled stage. Improved circuitry has been used which ensures more stable oscillation with any good 1 MHz frequency standard crystal. An LED indicates that the stage is oscillating. The second oscillator stage can be used with any external crystal extending up to the low VHF range. An LED again indicates that the oscillator is working. The stage can be used as a simple crystal activity checker with the LED, or crystal frequencies can be used which will give some desired output when the oscillator is fed into the divider chain. The third stage, as in the original generator, is not really an oscillator stage in itself, but an oscillator input stage. It will accept any external sine or square wave input, condition it, and then apply it to the divider chain. The fourth oscillator stage, which is new, really increases the versatility of the generator. It is a square wave generator whose frequency can be controlled by an external capacitor only. By proper selection of this capacitor, frequencies from several Hz to several MHz can be generated. Thus, in combination with the divider chain, any desired frequency or marker can be generated. The fifth oscillator stage, which is optional, is similar to the fourth oscillator except that it is intended mainly for the entire HF range up to about 25 MHz. Its frequency of oscillation is also controlled by an external capacitor, but its main feature is that it is a

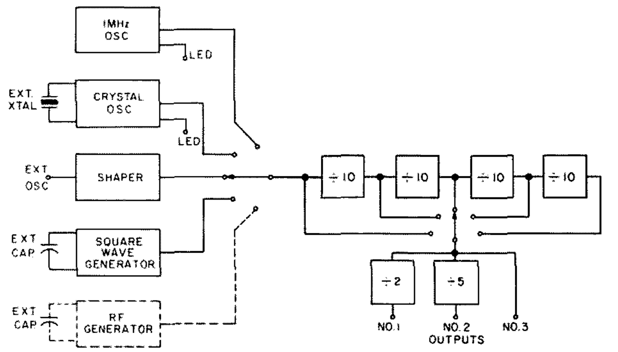

Fig. 1. Overall block diagram of the generator.

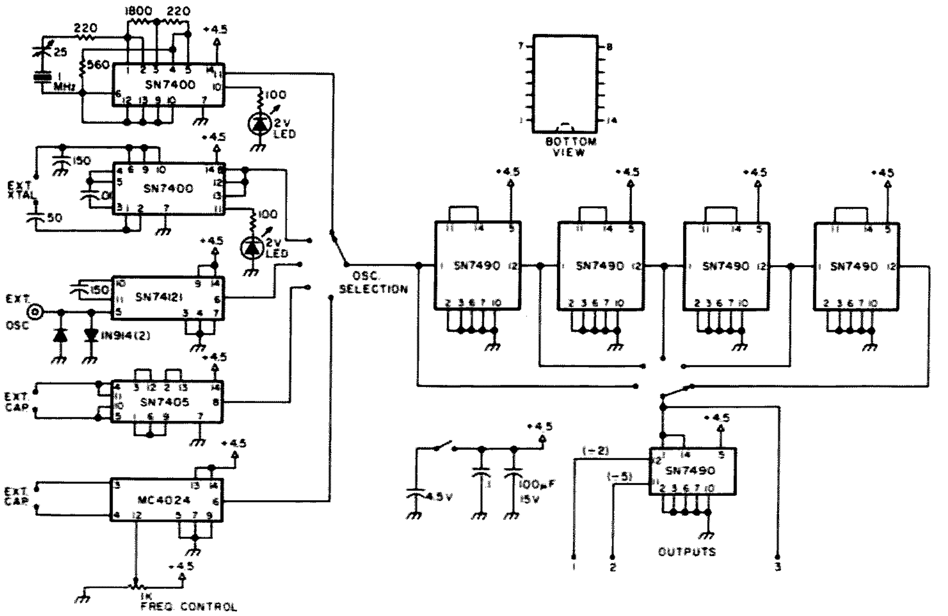

Fig. 2. Wiring diagram. Note that the divide by 5 and divide by 2 functions use only one SN7490. See text for some details on bypassing by each IC.

voltage controlled oscillator. By varying the voltage with a potentiometer to one section of this stage, a variable or sweep frequency output can be obtained.

The divider chain is a simple series of four divide by 10 stages. The outputs from a 1 MHz input will be at 100 kHz, 10 kHz, 1 kHz and 100 Hz. The stages are similar to those found in the timebase of any frequency counter or many crystal calibrators. The two divide by 2 and divide by 5 stages can be switched in along the divide by ten string. Using the 1 MHz oscillator input example again, the outputs of the divide by 2 stage will be 500 kHz, 50 kHz, 5 kHz, 500 Hz and 50 Hz. The outputs of the divide by 5 stage will be 200 kHz, 20 kHz, 2 kHz, 200 Hz and 20 Hz. This example may appear very obvious, but when dealing with inputs other than a simple 1 MHz one, it is important to list *all* the various output frequency possibilities to avoid confusion. Of course, looking the other way, that is, towards VHF marker frequencies, the above frequencies represent the intervals at which marker frequencies would appear since the output of the digital stages is a square wave with a very rich harmonic content.

The actual circuit of the generator is shown in Fig. 2. Use is made, except for the optional fifth oscillator stage, of only simple SN7400 family ICs. The SN7400 1 MHz oscillator stage makes use of 2 of the gates for the oscillator itself, one for an output buffer, and one to drive the LED oscillator activity indicator. The oscillator can be beat against WWV for accurate calibration using the 25 pF trimmer. Do this by connecting the output of the oscillator, through a small coupling capacitor if necessary, to the antenna input of a receiver tuned to WWV on 5, 10, 15 MHz. During the 10 second tone pause on WWV, adjust the trimmer for zero beat. The second crystal oscillator will operate over a very wide range. The only component that may have to be changed with frequency to ensure stable oscillation is the 150 pF capacitor from one side of the crystal socket to ground. The 150 pF nominal value will operate satisfactorily with most HF crystals. The oscillator range can be extended higher or lower by making this capacitor have a value (in pF) equal approximately to 500 divided by the crystal frequency in MHz. Overtone as well as fundamental mode crystals will work.

The third oscillator, a SN7405, is a hex inverter which uses a single external feedback capacitor to produce a square wave output ranging from a few Hz to several MHz. The capacitor values needed will range from 300 uF to 30 pF. The output waveform is not exactly a square wave in the truest sense since the on and off times for each cycle are not exactly equal. Normally, this will not make any difference, but the situation can be corrected by connecting a 22k resistor from pin 4 to the supply voltage.

The fourth oscillator input stage has been found to function well and is left as originally shown. About a 1.5 to 2 volt input is required from any external sine or square wave generator to activate the multivibrator. The operation of the stage will be very obvious and even the output from a low voltage filament transformer through a current limiting resistor can be used to check that it is operative.

The fifth oscillator stage, a Motorola 4024, is a very interesting voltage controlled oscillator. Its circuit simplicity belies its very versatile usage. The operating frequency *range* of this oscillator (multivibrator) is controlled by the value of a single external capacitor connected between pins 3 and 4. The tuning or output *frequency* of the oscillator *within the range* established by the fixed external capacitor is determined by a variable 1 to 5 volt dc voltage applied to pin 12. For example, with a 430 pF capacitor between pins 3 and 4, the output frequency range as the voltage on pin 12 is varied between 1 and 5 volts is approximately 200 kHz to 1100 kHz. For a 100 pF capacitor, the range is 5 MHz to 25 MHz. The IC will actually operate up to 30 MHz with a bit of care as to lead dress, etc. The leads to the external frequency range determining capacitor should be kept as short as possible. Also, the ground leads and bypassing to the supply voltage pin should be short or the full frequency range of the oscillator may not be realized. Unlike the SN7400 series ICs which are widely available, one may have to look twice for a source of the MC4024. One source (at $3.00) is Circuit Specialists, P.O. Box 3047, Scottsdale AZ 85257.

The divide by 10 chain uses SN7490s in their conventional arrangement. Once the layout of a single stage has been determined, the rest need simply be duplicated. They can easily be wired on perforated board stock as can the other ICs in the

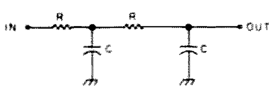

$$RC = \frac{10}{F 2\pi}$$

R in Ohms
C in Farads
F in Hertz

Fig. 3. Simple RC filter which will help round off square wave output so a quasi sine wave output can be obtained. Component values should be optimized using an oscilloscope if possible.

generator. The original article provided a simple enlarged view of simple perforated board wiring for SN7490 divide by ten units which is still valid.

The divide by 2 and divide by 5 stages are all actually contained in one SN7490 which sort of does double duty as a frequency divider.

The construction of the generator depends on individual taste. It can be constructed as an ac powered unit or as a portable unit. As an ac powered unit, a simple power supply using an LM309K regulator is recommended. My portable unit was constructed in an approximately 3" x 4" x 1¾" metal enclosure. The perforated board was just slightly smaller than 3" x 4" to fit the enclosure. Portable power can be supplied by a 4½ volt battery (Burgess 532 or equivalent) or 3 type C or D cells connected in series. There are two main bypassing details, however, which must be observed for good performance and which are *not* shown in Fig. 2 for sake of simplicity. *Each* IC must have a .1 uF disc capacitor going from its supply voltage terminal to ground. Also, a 100 to 500 uF/10 V electrolytic must be connected across the battery terminals for a portable unit.

The many uses of the generator have been considerably expanded by the update features described in this article. It can function as a highly accurate square wave frequency generator (down to fractions of a Hz) at any dividable frequency down from a crystal frequency reference. It can function as a highly accurate marker frequency generator in the HF or VHF range, depending on the crystal frequency reference used. It can produce basic frequencies or harmonic markers at any frequency up to VHF by means of its internal oscillator or by means of an external oscillator which is variable in frequency. It can serve as a crystal activity checker for almost all fundamental and overtone type crystals. The combination of having a crystal reference frequency oscillator available in combination with a variable AF or RF oscillator allows comparison to be made so one does not fall too far out of range within any variable frequency range.

A final word might be said about the output waveform of the generator. The output is a square waveform and hence quite rich in harmonic output. It cannot function as a pure, fundamental frequency sine wave generator and was never intended to do so. Reasonably good sine waves can be produced, however, at any output frequency by suitable RC filtering. The situation is very similar to that of filtering a sharply "clipped" audio signal before it is applied to a modulator stage in a transmitter. Fig. 3 provides the details of a 2 stage RC low pass filter which can be built for any AF to HF frequency to provide a reasonable sine wave output. Of course, LC filters will be better to get a pure sine wave, especially multi-section filters. The formulas for such LC low pass filters can be found in many reference texts on electronics. ■

Howard F. Burgess W5WGF
1801 Dorothy Street NE
Albuquerque NM 87112

Who, me? A Pioneer?

--some fantastic frontiers are wide open

There hasn't been a better time in the last fifty years than right now for the lone experimenter to do big things. There are still new frontiers that need exploring and some of these need just what the ham has to offer. If you have an unlimited curiosity about things electronic, and if new ideas are a great adventure to you. now is your time – that is, if you would like to do some research on your own.

Several areas that we would like to suggest are in the little known region where functions of the mind, body, electronics, and even communications just seem to overlap and blend. It's a sort of gray area where life itself may some day be explained by the laws of electronics.

True, it's not exactly communications, so why bring it up in a ham magazine? Mostly because it's an exciting new world of electronics for the ham to experiment with and because people in ham radio have such a versatile reserve of skills which can help. It's work that can use talents ranging from those of simple measurements to advanced computer processing of complex data.

It is a world where the mystics rush in and which most scientists prefer to avoid. Both groups are making noises, but few are coming up with any usable answers. With luck, the rewards to the experimenter could be great, and the right answers could change our whole way of life.

In the recent mad dash of space age research we learned how to ask more questions than we are able to answer. New developments in instrumentation and methods of observation have shown us that a lot of things are happening that we just can't explain. With the recent decline in research money for the big labs, and most of all, with ultraconservatism increasing in established science, many of these questions may remain unanswered for a long time unless they are tackled by adventurous individuals. When these new horizons are finally explored, the groundwork will probably have been done in someone's back room, garage, or on the kitchen table. But whoever does it will need an open mind, a lot of courage, and a thick skin to survive. A basketful of junk will also help.

Many of the unanswered questions are very embarrassing to the established lab worker because they cannot be answered on the basis of

There are still new frontiers for the ham.

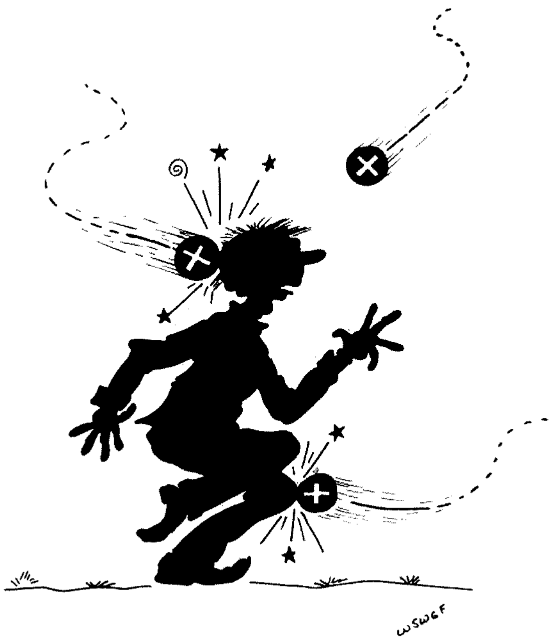

Headache? Sore joints? Maybe it's positive ions!

facts that we now know. Many of the questions have been swept under the rug just to avoid the unorthodox answers that seem certain to follow.

To compound the embarrassment, some of the observed phenomena are even related to folklore subjects. New measurement techniques verify that some old and odd effects really do exist, but it is not easy to explain why or how. To make things even more confusing, some of the more spectacular subjects have been seized by the occult and psychic groups and converted into mystical exhibits. Even some of the so-called researchers seem to be hung-up in a fantasy world.

One question needing attention happens to be related to communications. What is really happening when people think they are communicating with plants and flowers? It sounds crazy' but there's more to it than you may think. We have all seen the wild publicity-seeking stories of how plants think and can sense man's feelings, both good and bad. Even electronic devices are being used to show how plants express their likes, dislikes, and fears. We must admit that when a meter moves to full scale, something must be causing it. Perhaps it's time we found out what is happening.

And here is where you will need some of the courage we mentioned. The people who are riding the crest of publicity will be quite upset when you prove that their great new mystic display is based on natural phenomena which you can demonstrate. Many of the people in the field of science are also quite narrow-minded. They will avoid you because you have been flirting with the mystics. I have been down this road before, with Kirlian photography.

But somewhere a researcher is going to come up with some exciting new finds. Work in my own little lab leads me to believe that a few hams could put this whole plant dilemma in perspective. We will find that the phenomenon is based on sound principles, just like the night flying moth that uses microwave CW to communicate with its mate.

All things seem to indicate that the plant, when it reacts, is only acting as a detector and is sensing the changes in radiation from the human body. These changes are caused by the thoughts and emotions of the researcher or someone near. We already know that some of the signals are in the infrared spectrum, but who knows yet what other forms of transmissions are present? This could be important.

The plant, because its whole life process depends on forms of radiation, is simply acting as a transducer. Like the thermocouple, thermistor, or diode, it is merely converting a form of radiation into electrical impulses which can be read on ordinary instruments. The plant is not processing data and coming up with an opinion.

However, there is another exciting possibility if you care to speculate and crawl a little farther out on a limb. The electronics and chemistry of the plant may also be acting as a detector for forms of radiation which we do not know about yet. At this time, our thinking and theories are all built around electromagnetic radiation. Perhaps there are other forms of which we are not yet aware but which the right transducer could detect. There might be other natural transducers even better.

The well-known Dr. Rhine of Duke University fame proved in lab work that ESP involves a form of transmission that is neither time nor distance dependent. Perhaps it is time for some of us who specialize in detectors to try for some new answers. At this time there are at least six well-funded groups in the world trying to contact advanced civilizations in outer space. If people in outer space are as advanced as we would like to think they are, they may have long ago abandoned the use of slow, noisy, radio waves. Maybe we do need some new detectors. Perhaps your first far out space QSO will be using the old pine tree as a combined detector and antenna. Talk about the need for courage! You'd better be pretty well fortified when you tell your neighbor that you just received a message from Jupiter on the geranium. You may be lucky, though; he might just think you said

It says there's some distortion in your lower sideband.

germanium and are only half crazy.

But back to the serious business at hand; there is a lot of research needed in this area. We have found that certain plant leaves, even when removed from the plant, will give full scale readings on our instruments when a human hand is brought within four feet of the leaf. Just turning on a soldering gun across the room from the leaf will also produce full scale readings before the gun is hot enough to melt solder. A light beam on the leaf will do the same. But high background readings, even in a dark room, indicate that the leaf is also reacting to other signals. What are they? How about putting a leaf In a parabolic reflector? Where do we go from here? It's as wide open as ten meters in a high sunspot cycle.

Yes, this is unexplored territory, but there has been an occasional wanderer passing through. So don't be surprised if you find a few footprints as you travel along. Fifty years ago John L. Reinartz, one of the early all-time greats in ham radio (1XAM, later K6BJ), was interested in the electric currents generated by living plants.

There is no limit to what we may find now, with our new capabilities. All of the work with plants can be done with home-built electrometers and sensitive low frequency and dc voltmeters built from bargain ICs. It can be done on the kitchen table or in a corner of the garage.

Another bit of research needed is even closer to ham radio. It is in the field of atmospheric electricity, or potential gradient. There has been a lot of work done here but much more is needed. Needless to say, lightning has been a headache for hams from the early days. But lightning is probably the most publicized and least important part of the potential gradient story.

There is a voltage difference between the surface of the earth and the ionosphere of about 350,000 volts, with a continuous current of about 50,000 Amps at all times. This is distributed over the entire surface of the earth and at any given point the current is very small. However, the natural potential difference is vital to the balance of nature for the function of the human body and things that live above ground. One of the problems beginning to face us now is that with all of our electrical apparatus, power lines and such, we are destroying the original dc field. We are overriding it with pulsating ac fields which can have an adverse effect on both mind and body.

For a long time this idea was ridiculed by the scientific community. But just recently it was announced from Europe and verified by researchers in this country that people working in the vicinity of high tension power lines are developing health problems. This can also happen in the fields of other devices such as high power transmitters. Of course some of this work must be done by medics, but there is much that can be learned by the small worker.

The high level surges from power lines or other electrical equipment are suspected by some of being capable of even resetting biological time cycles. Dr. Ross Adey (WB6DEX) of the University of California School of Medicine has done some excellent work in this field.

It is known that altering the potential gradient within buildings can affect sleeping habits. In our own experiments we have found that restoring the voltage gradient in the home (artificially) can increase the ability to get a good night's sleep. It also increased the feeling of well being and the ability to think better during waking hours.

You don't have to be crazy – but you'll never convince anyone else.

In office experiments, returning the gradient to the normal values decreased work errors by 50% or more. This in turn brings up other questions. What does the HV supply in the TV do to the voltage gradient in the room? Is it good or bad? Perhaps its overall effects are worse than the x-rays we worry about? All of these things can be researched with instruments and power supplies that many hams can construct at little or no expense.

Still another of the interesting areas, which is somewhat related to potential gradient, is air ionization. An ion is just a particle that carries a charge. Of course they can be either positive or negative. The ions that we are interested in right now are air ions, or charged air particles. When the negative charges in the air that we breathe exceed the number of positive charges, we feel better, many respiratory ailments disappear, wounds heal faster, and all sorts of wonderful things happen. It's just one of those great days. Positive ions can cause the reverse, such as that old dopey, draggy feeling. Rheumatism, asthma, circulation, blood pressure, and all sorts of problems get worse. The medical effects of ions on life have been well researched by reliable labs in this country and in Europe. But that is just about where it has stopped. Perhaps one reason is that plenty of usable negative ions are hard to come by. And here is where the ham could really get involved – in the hardware. No one has seemed to come up with an easy way to generate negative ions without some unwanted side effects such as radiation, ozone, excess heat and the like.

As usual, the federal government has only made

matters more confused. A few fast-buck artists got into the field early and peddled some phony equipment. Now everyone must suffer because the Food and Drug Administration has made rules that severely limit work in this area. Like many other things that the FDA has done, much of it is without rhyme or reason. It is another case of bureaucratic sheepdogs chasing phantoms and barking "wolf." However, if you don't hang out your shingle you are on safe ground.

There are many other unexplored areas, like the Lakhovsky effect, for those who like the unknown. Lakhovsky was a Russian refugee scientist who demonstrated years ago that bursts of low level broadband rf power in the microwave region would cause malignant growths, on both man and plants, to dry up and disappear. No harm was suffered by the patients. He proved his point in large hospitals in both Europe and this country. But like so many such discoveries, it was a good demonstration and that is where it stopped. Lakhovsky was not an M.D.; he was an engineer. This ruled out any use of his discovery. To close the incident, such effects as he demonstrated were theoretically impossible and therefore did not exist.

These are only a few of the fields that are electronic-related and are ripe for research. They also offer the chance to be tarred and feathered by our progressive and advanced society. However, considering that ham radio is a hobby that cuts across all professions and businesses, there is probably no group with more contacts to call on for help or additional information. As usual, some of your best help might come from your local politician. If worse comes to worst, you might end up with a job bugging . . . plants. ■

LETTERS

from page 38

bands.

The good people at the Baltimore FCC are tired of seeing me come in, pay my four bucks, and then blow the code test time and time again. My copy is good at home, but as your ad says, the steely-eyed monsters at the candy factory scare hell out of me. No kidding! I'm a big boy now and I feel that your tape is the answer. I'm not afraid of the truth.

I know that you most likely get tired of reading idiotic letters like this one, but your editorials and magazine in general has been the uplift that I needed to rekindle my interest in ham radio. I thought that everything had to be technical and impersonal with no fun, as depicted in other magazines. I admire your straightforward approach to state what you think is right or wrong — whatever the subject. Keep it up — that's what our society needs more of.

John J. Dippel, Jr. WA3YPS
Baltimore MD

READ THE RULES

I have your latest magazine at hand with the cover copy, "Hey, CBers!"

I have been a Novice for about seven months now and have had quite a bit of "on the air experience." My question is, "Why should any CBer want to change to ham?" Every time I make a good contact with someone, there is always another station that comes right on without listening, and starts calling. I in return simply QRT because it isn't worth it to continually buck this sort of thing. At least the CBer asks for a break and goes to another channel for the QSO. He also thanks you for the break. The CBer that I am in contact with is courteous and interested only in good clean contacts and signals. He is interested in good relations, and is an addition to his community and the many other CBers.

As far as rules are concerned, I can find as many offenders on the "ham band" as I can find on the CB channels. I have heard deliberate jamming, obscene language, lack of courtesy, operators using their equipment wrongly, and even solicitation.

So my question remains. I believe also that, before bragging too much that, "I am a ham, not a CBer," some of them had better read the rules again.

Louis Johnson WN1WHE
Shelburne Falls MA

SUCCESS

The Mount Airy VHF Radio Club (The Pack Rats) is pleased to announce that the Colombian moonbounce expedition was an unqualified success. We accomplished the following: 1) first 432 EME contact from South America; 2) first OSCAR 7 Mode "B" contacts from Colombia; 3) a total of 16 stations were worked on 432 EME, representing eight different countries; 4) there were approximately 75 OSCAR 7 Mode "B" contacts.

The station (HK1TL) was operated by the following individuals: Anthony Souza W3HMU, S. William Olson W3HQT, Walter Bohlman K3BPP, Elliott Weisman K3JJZ, Daniel Mitten WA3NFV, Socrates Martinez WB3AFY/HK1CWB, Bohlmar Aguilar WB3AOP/HK1AMW.

The trip was financed by the individuals listed, with assistance of the following: unidentified Pack Rat member, Mount Airy VHF Club treasury, Collins Radio, Northern California DX Association.

We deeply appreciate the South American coordination of HK1BYM, Dr. Atenogenes Blanco, and the complete support of the Area-2 Radio Club of Barranquilla, Colombia.

We would also like to acknowledge the stateside liaison work of W3KKN, Ernie Kenas, and W3TNP, Bertha Kenas. This liaison work was instrumental in developing new EME schedules. QSL via HK1TL, Box 169, Ottsville PA 18942.

Elliott T. Weisman K3JJZ
Philadelphia PA

STREAMING

Congratulations on the new format of *73*. It is a real nice magazine you are putting together. The pictures and diagrams look a lot better this way.

Our repeater, WR4AQR, is full of gadgets copied from *73*: I built the autopatch around an article printed in *73* a couple of years ago. I changed a few things around, like three digits to activate and three to deactivate, canceling activation if the digits are not pressed in less than four seconds, avoiding false triggering, time out limiting calls, activation of tape re-

Continued on page 288

Dave Ingram K4TWJ
Eastwood Village #604 N.
Rt. 11, Box 499
Birmingham AL 35210

The Shirt Pocket Touchtone

-- autopatch from your HT or car

This article describes a simple and inexpensive touchtone encoder which can be built within an hour or two and used with any FM rig for autopatch operations. Since the encoder is quite small, it is ideal for both mobile and portable work. When not in use, it can be concealed in an auto's glove box or carried in a shirt pocket. Connection to the FM rig may be acoustical or electrical as desired, thus permitting the pad to be swapped between several setups.

Front view of touchtone encoder. Unit fits comfortably in shirt pocket.

This little gem consists of a small "SME" touchtone generator manufactured by Data Signal, Inc., of Albany, Georgia, and any common, small transistor radio. The touchtone pad is mounted on the transistor radio, using its audio section for amplification. Output tones can then be fed into the mike of your FM rig. Data's inexpensive "SME" is sold in two parts: the printed circuit board tone generators and the keyboard proper. As several interchangeable keyboards are available, you can choose one which suits the particular transistor radio used.

Getting Started

First, select a touchtone

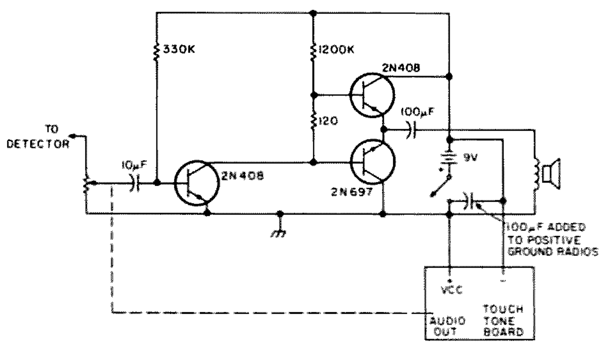

Fig. 1. Complementary-symmetry output of inexpensive transistor radio. Note use of 100 uF capacitor to facilitate mixing positive and negative ground circuits.

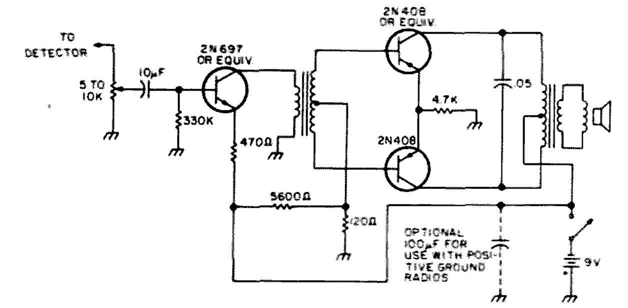

Fig. 2. Sample schematic of a push-pull output used in a transistor radio.

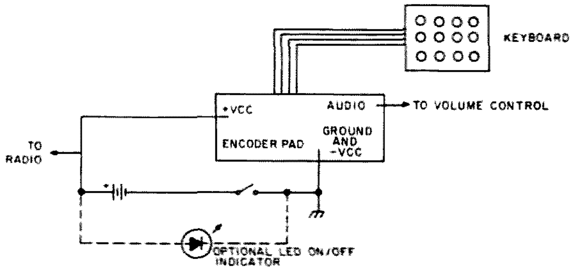

Fig. 3. Negative ground radio.

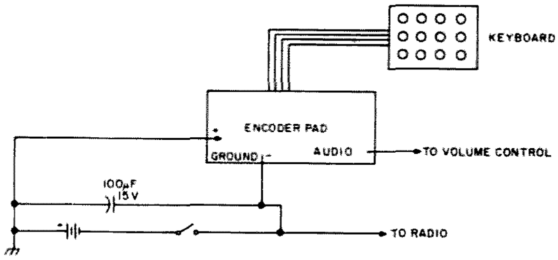

Fig. 4. Positive ground radio.

encoder and a small transistor radio which will look professional when mated together. Pick a radio with a straightforward audio circuit and negative ground (if possible). Make sure it has a long, flat loopstick antenna approximately the size of your encoder's printed circuit board. Most inexpensive radios use complementary-symmetry outputs similar to that shown in Fig. 1, while slightly more expensive radios use push-pull outputs similar to Fig. 2. Next, check out the radio's audio section when tones drive the isolated amplifier stage. This is best accomplished by connecting the encoder output to the wiper and one end of the volume control (you can also connect tones between the diode detector output side and ground, if the volume control method presents a problem). Clip lead jumpers are handy for this preliminary test.

Construction

If everything works properly, you are ready for the brutal part. Remove the radio's printed circuit board, and then detach the loopstick antenna and main tuning capacitor. Remove the tuning dial (if it wasn't removed along with the tuning capacitor) and any ornamentation covering the selected keyboard mounting area. Put the touchtone keyboard in place and mark the area which must be cut to allow proper fit (the keyboard's furnished paper template is ideal for this purpose). Now, carefully drill the necessary area to clear your keyboard's connectors. (This area can also be melted with a small, low wattage soldering iron.) I suggest that you make small oval connector openings, leaving the maximum amount of surface for pad support. After you become accustomed to working with plastic, you can move and reweld any printed circuit board supports removed during the previous drilling process. Next, drill four small holes for the pad corner studs and place a fine layer of cotton on the keyboard mounting surface. Now mount the pad, check to see that it isn't being bent or warped, and then lightly glue it in place.

After the glue dries, solder all connecting wires to the keyboard and tone generator board. Solder encoder ground and audio output wires to the radio volume control, and then reinstall the radio board while keeping everything intact and neat. The tone generator board can now be fitted into the loopstick antenna space. The final step involves connecting positive voltage to the encoder board. If you picked a negative ground radio, this is quite simple: just run leads to the *switched* nine volts, as illustrated in Fig. 3. If doubtful, use a VOM to find convenient take-off points and to make sure that low current isn't drawn while the unit is off (the SME doesn't draw current until a button is depressed). If you picked a positive ground radio, the encoder circuit will require grounding for ac (tones) but not for dc (nine volts). An arrangement which accomplishes this is shown in Fig. 4. The 100 uF capacitor passes tones while preventing dc from shorting the battery. Be sure the encoder and radio PC boards are not grounded together, and all will work fine.

The output level is adjustable with the radio's volume control. If your autopatch repeater is critical of tone amplitudes, just mark the exact tone level spot on the volume control knob.

Should you desire to electrically connect the encoder to a mobile rig and acoustically couple it to a handie-talkie, then make a small cable to use between the radio's earphone jack and your mobile FM rig. When using this method, best performance is realized by connecting the encoder output between ground and wiper of the FM rig's internal deviation potentiometer. This method eliminates any clipping or reshaping of tones that occur in the rig's audio section. (This modification is easily performed on gear like the TR-22. Reconnect speaker leads to bypass the front panel earphone jack, and then connect a wire from the deviation pot to the earphone jack "tip." Tape any exposed wires.)

Other Applications

Earlier, I suggested that you lightly glue the touchtone pad to the transistor radio. Should you later decide to mount this touchtone encoder onto a specific FM rig, cut the pad corner mounting studs and *carefully* work the pad loose (use fingernail polish remover if necessary). Cut connecting *wires* and remove both parts of encoder. Avoid resoldering to the pad — it's quite delicate. Now mount the complete works in your new rig.

Conclusion

During recent years, I have used several other touchtone encoders and they all had similar problems: They were inflexible and bulky. This little encoder is so small and handy that I can carry it anywhere, anytime. I think you, too, will enjoy owning and using such an interesting ham conversation piece. ■

Jack Grimes W4LLR
Box 16004
Memphis TN 38116

Put Your Name in Lights

-- giant nixie message display

The Burroughs giant nixie B7971 readout is one of the most intriguing devices to appear on the surplus market. Simple, single message displays are easy to construct. (See Nov/Dec *73 Magazine*.) Using the nixies in a clock requires only a few more parts than the usual LED readout chronometers and is well worth the effort.

But casual thoughts on the subject of building a changing word sign conjured up visions of a complex, computer logic matrix, a project this old, middle-aged ham thought better left to the IC generation.

However, like many other conclusions reached without proper cogitation, this one had no basis in fact.

Unfortunately, keeping beans (and occasionally meat) on the table, gas in the Ford, and two jumps ahead of the utility company and Ma Bell's collection departments requires a bread and butter job. Mine happens to be in the sales field. A part of my duties includes setting up and manning a booth at various conventions. For the past year, each time I set up the booth and hung the same wrinkled banner used for the past ten years, I would think how attractive a nixie display sign would look. Then, further dreaming, I would picture in my mind a changing letter display with the product name alternating with a hard hitting sales message. The changing letters would *have* to attract attention.

So, finally, I began doodling, figuring out the words and combinations I would need, and how and when and which segments would need to light.

One key fact was immediately apparent: The lighted segments needed to form the two messages would be contained in three strings:

1. "A" Segments common to both sets of words and numerals.

2. "B" Other segments connected together, which, when added to the common segment string, would form the first message.

3. "C" The third string, when combined with the common segments only, would form the second message.

With this obvious and simple discovery, the complex job had now become commonplace. All that was necessary was to wire the segments that were common to both messages so that they would stay lighted at all times. Then, by switching on either of the other strings a message would be formed. A simple, single pole, double throw toggle action would complete the display.

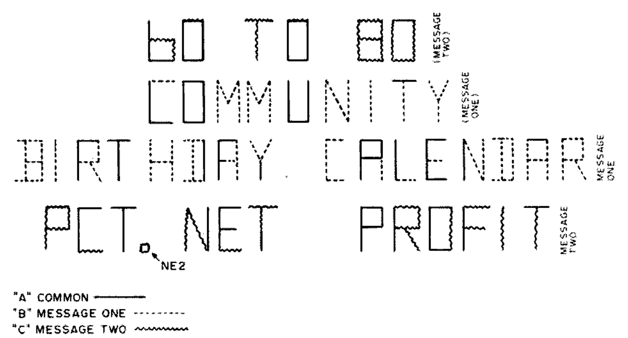

Fig. 1. Two center lines — first message. Top and bottom lines — second message. Only nixies in first message used to form second message. Two center lines change to form message shown here in top and bottom lines.

There were several ways this could be accomplished: mechanically, with a geared motor and cam; with tubes and a polar relay; or with switching transistors.

Resisting the temptation to revert to tubes, I turned to solid state. As usual, a persual of my available magazines turned up no information. So I started from scratch.

The 555 IC looked like the ideal timing device. Tying it to a flip flop (7476 or 7473) would give two positive voltages of opposite timing and selected duration. This voltage, I reasoned, could be used to turn on transistors in the negative leads of the nixie segment strings.

Actual construction of a

changing letter display of your choice is relatively easy. First, you must decide what you wish to say in each of the two messages. Then count the letters in the longest message. You will need this many B7971 nixie tubes and sockets.

(Let me say here that the article on simple displays in the Nov/Dec issue of *73* produced more reader correspondence than any article I've ever written for any magazine. Most wanted to know where to get the nixie tubes, which had been advertised in the May issue of *73*. At this writing, less than a week ago, I received tubes from Meshna, Lynn, Mass. A friend purchased six from Fair Radio Sales. All I can say is, watch the ads, and write to the surplus dealers.)

I found the easiest way to lay out the sign was to print the longest message in the center of a page, and the second message above (if a single line) or above and below (if a double line). See Fig. 1.

The next step was to code the letter segments. First I used a red Flair pen and drew (over the light pencil markings) all segments which would be common to both messages. Then the segments necessary to complete the first message in another color. And finally, the additional segments to complete the second message in the third color.

Once this task was completed, the sockets for the nixies could be arranged and mounted on the appropriate size sheet of plywood. If the sign contains two rows, the upper row of nixies should be mounted upside down. In this manner the sockets and wiring may be concealed by the cabinet frame. If you have bought the nixies with driver boards, use the aluminum brackets and sockets as removed from the boards.

The anode (pin 13) of each nixie is fed high voltage through an 800 to 1,000 Ohm resistor. (This resistor must be of a higher value if a higher voltage source is used.) All common segments are connected together and directly returned to the negative (-) terminal of the 150 V dc supply. The two other segment strings are tied together in a similar manner, but each of these strings terminates at a switching transistor. I used wire, the same colors as the sketch, which made it easy to correct mistakes. I also found it best to wire "live," with the voltage applied to the anodes, and with a test probe connected to ground. In this manner, a touch of the probe showed which segment was being wired.

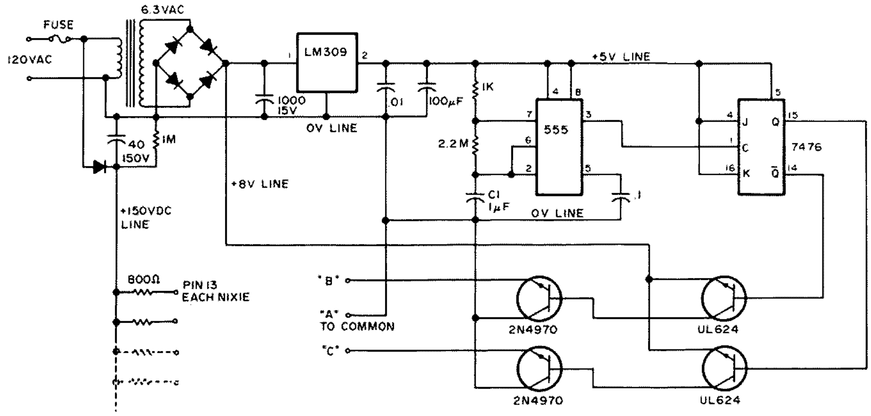

Fig. 2.

The power supply must provide two voltages, 5 V regulated, and 150 V dc. I used a half wave line voltage rectifier for the 150 volts. The low voltage supply is obtained from the rectified output of a small filament transformer and may be from 6.3 V to 12.6 V. I used a very small clock transformer giving 9 V ac. An LM309K provides the regulated 5 V.

The 555 circuit is standard. You may wish to change the 1 uF capacitor (C1) for a different display interval.

Only one half of the 7476 is used.

The only problem encountered was getting the right switching transistors for a clean on-off break so that no residual flicker remained on the turned off segments.

First, I tried driving the switching transistors directly with the 7476, but spikes coming from the high voltage nixie supply were too much for the 5 V IC.

All four driver transistors are NPN, and all are small, low wattage. The actual switching transistors used are 2N4970s (300 V, NPN). The isolation transistors are old UL624s, also NPNs removed from the surplus nixie boards.

A scope is not needed, as all measurements needed may be made with a VOM. Of course, when the power supply is complete, be sure the LM309 is doing its job before applying power to the 7476. If the 555 stage is working properly, you will read, at pin 3, approximately +4 volts, turned on, then off. If you use the 7476, the same voltage will be read at pins 14 and 15 (pins 5 and 6 with the 7473).

A printed circuit board would, of course, be the ideal way to wire the power supply and timer circuits. However, since this was a one of a kind project, I hand wired, soldering directly to the IC pins. A couple of hints for this type of construction: Use one strand from a small stranded wire to make the connections to the IC pins. Drill small holes through the board, looping the wire, up and back down to keep it secure and to provide tie points into heavier wire.

After the project is complete, mix clear five minute epoxy and apply to the fine wiring beneath the board. This makes the wiring practically immune to breakage, and is especially important if you intend to haul the sign around.

The cabinet may be constructed of any suitable material. I used plywood and 1 x 2 inch moulding for the framing, glued together.

One added thought: My particular sign contains an abbreviation, PCT. The period is formed with an NE2 and a 100k resistor wired in series between pin 13 of a nixie and segment string "C". Any small additional punctuation may be made in this manner.

Those of you who are in business will find many uses for a changing letter display. Others may end up with a novelty such as BAR OPEN / DOWN THE HATCH, or an alternating house number and street name, which would be a real conversation item.

So get out your scratch pad and start doodling. Who knows what you might come up with! ■

Liquid Crystal Display Guide

--for low, low, low power consumption

W. J. Prudhomme WB5DEP
1495 Richland Avenue
Metairie LA 70001

Digital displays are beginning to show up everywhere – from sophisticated electronic equipment to everyday items such as ranges, clocks, calculators, and wristwatches. There are presently two basic watches available: One has a liquid crystal display and the other an LED with a push-button switch to conserve battery power. In other words, with an LED digital wristwatch you still need two hands to tell time.

Actually, each new application of a digital display has resulted in continued improvements of display capabilities. For example, the present state of the art has evolved through incandescents, cold cathodes (neon, gas discharge or plasma), fluorescents, light emitting diodes (LED), and liquid crystal displays (both dynamic-scattering and the newer field effect types).

With new advances being made very day, perhaps it would be beneficial to review the many digital displays available and provide you with some information on how to apply them in your next project. My own experience has been that unless you have complete data on the particular device you are using, problems can arise through misapplication. Perhaps this article will serve to acquaint you with the characteristics of each device and serve as a handy reference. Emphasis will be on liquid crystal displays since I feel these devices will dominate the display field in the future.

Display Types

It would not be appropriate if we did not begin our tour with the NIXIE (a trademark of Burroughs). This device is one

Display Model	Height (inches)	Drive Voltage	Power Consumption	Remarks		Manufacturer	Available From
3601	0.6	15-20 V ac	2.25 mW	3½ digit instrument display		Hamlin, Inc.	KA Electronic Sales
3501	0.47	@	1.5 mW	8 digit calculator display		Lake & Grove St.	1220 Majesty Dr.
3401	1.12	15-120 Hz	3.75 mW	3½ digit clock display		Lake Mills, Wis.	Dallas, Texas
			(all segments energized)			53551	75247
7543 (R/T)	0.5	Transmissive:	0.5 uA	3½ digit instrument		Liquid XTAL	Various
		4-6 V ac @	per digit with			Display Inc.	Distributors
7544 (R/T)	0.5	30-1000 Hz	all segments on	4 digit 24 hr. clock		24500 Highpoint	
7560 (R/T)	0.5	Reflective:		6 digit counter display		Rd., Cleveland	
		9-15 V ac @				Ohio 44122	
		30-1000 Hz					
701		3 or 6 V ac	1.0 uW	12 hr. watch display		Beckman Inst.,	Various
702		@	total	24 hr. watch display	All	Inc., Helipot Div.	Distributors
703		25-100 Hz	average power	12 hr. watch display	Field	Fullerton, Ca.	
705			for all digits	3½ digit watch with date	Effect		
SSSI		7 V ac	0.5 uW	Field effect type		ILIXCO	Solid State Sales,
P/N:	0.4	@	per	3½ digit instrument			Inc., P.O. Box 617
84-06051		30 to 100 Hz	segment				Columbia, Md. 65201

Fig. 1. Typical liquid crystal displays available with general characteristics for each type. The low voltage types (7 V ac or less) are field effect types, while the 15 V ac models are usually dynamic-scattering types.

of the oldest electronic displays available and it has a different element for each numeral 0 to 9. An obvious disadvantage of this display is that each of the numerals is on a different plane, besides requiring a very high operating voltage. Despite the initial drawbacks, these displays have served us well and we continue to see them used in various pieces of gear.

The next phase in the development of displays evolved into the seven segment variety with which we are all so familiar. There are several different types, one of which uses incandescent lamps to light each segment. New methods have greatly increased the reliability of incandescent displays and we are seeing lifetimes of 100,000 hours as evidenced by the Chicago Miniature Lamp CM5. The main advantages to incandescents are brightness and the availability of full color with proper filters.

Gas discharge displays are seven segment devices which operate with a high anode voltage in the neighborhood of 100-180 volts, but feature low power consumption. An example of this display is the familiar Burroughs Panaplex. A high potential between the anode and the cathode characters causes the segment to glow, much the same as a neon tube. A resistor is usually connected in series with the display to limit the current to a safe value.

Fluorescent displays, on the other hand, incorporate a small filament in the display which effectively lowers the ionization potential. They feature lower voltage (20-30 volts), and low power consumption, and emit a blue-green color. The main disadvantage is the requirement of power for the filament, usually 1 or 2 volts @ 40-50 mA. However, the lower anode voltage makes the fluorescent display easier

Parameter	Dynamic - Scattering	Field Effect
Capacitance Above Threshold	5-35 pF (per segment)	5-35 pF (per segment)
Capacitance Below Threshold	2-15 pF	2-15 pF
Resistance Above Threshold	1-10+ megohms	400+ megohms
Resistance Below Threshold	500k-5 megohms	200+ megohms
Drive Voltage	12-20 V ac	2-8 V ac
Typical total Power Consumption (3½ digit watch)	50 uW	1.0 uW

Fig. 2. Typical characteristics for liquid crystal displays. Note the total power consumption at the bottom of the chart. By comparison, a 3½ digit LED watch display consumes 60 mW or 60,000 times as much power as the field effect LCD. The ac drive voltage may range from 25 Hz to 1 kHz although 32 Hz is typical for battery operated equipment and 60 Hz for line operated equipment.

to multiplex, which is the reason you may see them in desk-top calculators.

Now enters the light emitting diode (LED) on the scene and it becomes a whole new ball game. The LED is solid state and is usually made from gallium arsenide phosphide or gallium arsenide. Each of the seven segments usually consists of one or more LEDs whose brightness is dependent on the current applied (up to a point).

LEDs are susceptible to failure from overcurrent conditions and/or too high an inverse voltage. They are available in either 7 segment or dot matrices which can display alphanumerics. Usually red in color, yellow or green displays can be obtained at a slight premium. Until recently, they were available with character height from 0.1 to 0.8". However, one manufacturer has just announced a 1.0" LED which uses two diodes per segment, requiring a larger power consumption. The display from IEE, Inc., requires 3.3 volts @ 20 mA per segment and is 0.5" wide, giving it a slimmer appearance when compared to other LEDs. LITRONIX has also followed suit with the announcement of a new 1.0" LED display.

LED 7 segment displays are either common cathode (decoder/driver provides source current to the display), or common anode (decoder/driver sinks current from the display). Up until now, LEDs have dominated the display field, but as we will be seeing, a new generation of devices is about to emerge.

Liquid Crystal Displays

We are all aware that the liquid crystal display (although the effect was discovered many years ago) has taken a back seat to other, more popular, displays. This is not too surprising, since early LCDs had life

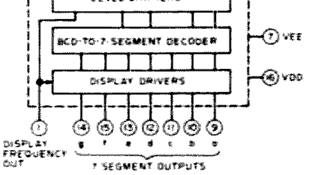

Fig. 3. Functional block diagram for the CD4055A BCD-to-7 segment decoder/driver with "display frequency" output.

expectancies of less than 5000 hours and would fail completely if operated below -20° C. The problems experienced when it was first introduced have hampered the LCD in gaining popularity. In spite of this, the LCD has some important advantages that are worth considering.

Of all available displays, LCDs are the only ones that do not generate light. Rather, they scatter any light striking the display's surface. The two basic types are reflective (requiring illumination in front) and transmissive (which requires light from the rear). Since these devices do not generate light, they have the lowest power consumption requirements of any display developed to date. For example, the RCA TA8046R 3½ digit watch display with all segments energized requires a total current of 1.0 uA @ 15 volts! The average device dissipation (with 70% of segments energized during a 12 hour period) is only 10.5 uW.

While another advantage is readability in highly ambient light conditions, the LCD has a disadvantage of low readability in dimly lit areas. This, however, is being overcome with back lighting which is turned on for a reading in the dark. This does not offset the LCD's low power consumption, since studies have shown that watches are read very seldom in the dark.

Also, power consumption is dropping to even lower levels. With the development of field effect LCDs, it's possible to have a 200 mil high, 3½ digit LCD display that draws a total of 200 nW. Life expectancy is also increasing, with some units up to 100,000 hours.

Applications

The predominant application of the liquid crystal display to date has

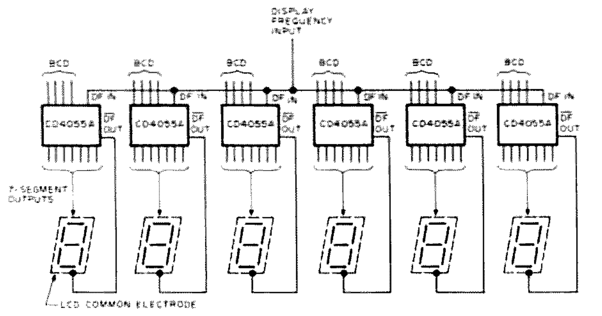

Fig. 4. Typical driver circuitry for liquid crystal clock display.

been in wristwatches, mainly due to their low power requirements. These displays are usually about 0.17" in height and a typical 3½ digit watch display can operate for a full year from a single dry cell watch-type battery.

You may be asking yourself, if the LCDs are so great, why haven't they appeared more in projects and articles? Perhaps the past reasons have been unfamiliarity of how to apply LCDs, price, or unavailability from the usual distributors. Notice I said "past reasons," because things are beginning to change fast and the LCDs are looking better every day (see Fig. 1).

Besides low power considerations, LCDs are ideal for use with CMOS circuits. It is now possible to construct compact portable equipment that can operate over extended periods of time from lightweight batteries. Also, for line-powered systems, the mating of LCDs and CMOS simplifies the driver circuitry, and eliminates current-limiting resistors.

Before you can properly apply LCDs, it will be necessary for you to put some of the LED techniques aside and consider a few new ones. To begin with, think of an LCD segment as a voltage dependent resistor in parallel with a capacitor instead of a diode as with the LED. The resistance of the segment is high above its threshold voltage and low below the threshold voltage. By now you may be realizing a primary difference between LCDs and LEDs: An LCD requires an *ac* voltage to operate and will actually be damaged by the application of dc. Consequently, driver circuitry is different, but in many cases less complicated than the LED driver. The basic parameters for both dynamic-scattering and field effect units are summarized in Fig. 2.

In addition, LCDs are temperature sensitive. Where an LCD is brought below or above its rated operating temperature range, it loses its liquid crystal characteristics. However, the condition is not permanent and the effects of temperature are reversible. When the LCD is brought back within its operating range, it will function again.

CMOS – LCD Decoder/Drivers

For a decoder/driver the Motorola MC14511 and MC14543 or RCA CD4055 and CD4056 can be used to drive the display (see Fig. 3). Also, there are many large scale integrated circuits available that provide parallel drive and eliminate external circuitry.

The RCA CD4055 and CD4056 are single digit BCD-to-7 segments that provide level shifting of the output. For example, output voltage swings of 0 to -3 volts or 0 to -15 volts are possible to drive either dynamic-scattering or field-effect displays. Fig. 4 shows a typical circuit for a clock display.

The CD4055A is a very versatile decoder/driver which can also be used for either common anode or cathode LEDs as well as LCDs. For example, if the DF input is maintained in a "low" state, the output segments will be "high" when selected by the BCD inputs. If the DF input is maintained in a "high" state, the output segments will "low." To drive an LCD, a square wave at 30 to 200 Hz is fed to the DF input. The selected segments will have a square wave output which is 180° out of phase with the DF input. When the DFout is level shifted (DFout) and applied to the LCD common line, the selected segments will be activated and displayed.

Where to Obtain LCDs

At present, I know of only three electronic suppliers catering to the ham market who advertise LCDs. Poly Paks has a small RCA wristwatch (3½ digit) display available, and KA Electronic Sales (Dallas) handles the Hamlin line of LCDs including a 3½ digit instrument (0.6" height), clock display (1.12" height) and an 8 digit (0.47" height) calculator display. Also of interest is the LCD sold by Solid State Systems, Inc., which is a field effect type from ILIXCO. This LCD is a 3½ digit (0.4" height) instrument type display and sells for $7.75 including the connector.

So let's get busy and start designing some equipment using liquid crystal displays. I think you will be pleasantly surprised with the results. ■

References

Electronic Design, Issue 19, September 13, 1975, p. 58.

COS/MOS Digital Integrated Circuits Data Book, RCA Solid State, Box 3200, Somerville, N.J. 08876.

Gene Hinkle WA5KPG
I/O Engineering
9503 Gambel's Quail
Austin TX 78758

Self-Powered Mike Preamp

-- when you need to SPEAK UP

While operating different SSB transceivers, I've noticed the difference in transmit audio gain between the different rigs on the market. The obvious solution for making up the gain necessary was the addition of a microphone preamp to each rig. After researching the literature for mike preamps, I soon discovered that most preamp circuits were too complicated or required power from the rig itself. A solution seemed to be battery operation of the preamp so it could be operated independently and be used with all rigs without any modifications necessary. My favorite hand mike is a Turner model 350C, which uses a ceramic element. A mike preamp was designed to boost the low level from the ceramic element to a more respectable level. The preamp was small enough to permit installation into the mike case itself, including the battery.

The three design objectives were small size, low power consumption, and operation over a wide battery voltage. Fig. 1 shows the design used to permit the use of an extremely small circuit board size. All components, if mounted on end, will fit on a tiny 1.5cm x 1.5cm vectorboard. This small board will fit inside of the Turner case as well as the case of any hand mike. The preamp is a common source amplifier with a gain of +20 dB. The frequency response is flat from 200 Hz to over 100 kHz. Because of the single FET stage and small voltages amplified, the power consumption during use is less than 200 uA. When not in use the power consumption is zero, permitting long battery life. Since the small circuit board easily fits into the Turner case, the only problem left was the placement of a battery. I found an Eveready 15 volt battery ideally suited for powering the preamp. The preamp circuit was designed to work down to a battery voltage of 7 volts, so the battery could be used as long as possible. Since the current is drawn from the battery only during transmissions, the battery should last nearly as long as its shelf life. The preamp has been left in the on mode for over a month before preamp failure due to low battery voltage.

The Eveready battery chosen is designated by the number 411, and costs less than $1.75 in single quantities. Its dimensions of 3.2cm x 2.5cm x 1.6cm allow it to just fit inside of the Turner case, as shown in Fig. 2. The battery rests on top of the mike cord where it enters the case, causing a clearance problem. This problem was resolved by carefully melting down the plastic cable strain relief channel with a soldering iron. The mike cord can then be pushed slightly deeper into the case, providing more room for the battery.

The push-to-talk switch was wired to disrupt the preamp output when not in use. A small power diode capable of handling the push-to-talk relay circuits was added to disable the preamp when not being operated. A small signal diode was inserted in series with the battery to prevent the reverse biasing of it during receive.

Since this mike preamp is self-powered, it can be used with any rig lacking in transmit audio gain. Since 20 dB of gain is used, overdriving the transmitter might be possible. The transmitter's mike gain will probably have to be adjusted to a low value to prevent excessive drive. The self-contained battery should last over a year, even with daily use of the mike. Although modifications were done on a hand-held Turner mike, the same circuit will work with other ceramic or crystal hand-held mikes, as well as with desk mikes. The only consideration would be the battery size. ■

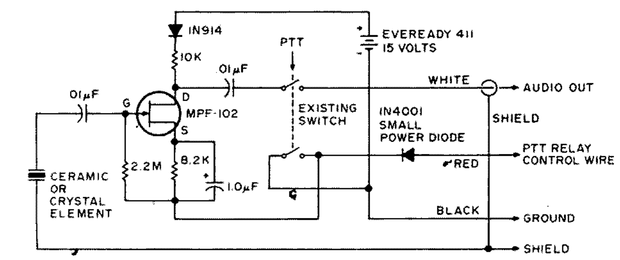

Fig. 1. Diagram of the preamp, which fits into the mike case. The unit requires less than 200 uA during use, and no current when not in use, permitting extended battery life. A small vectorboard is used to mount all components.

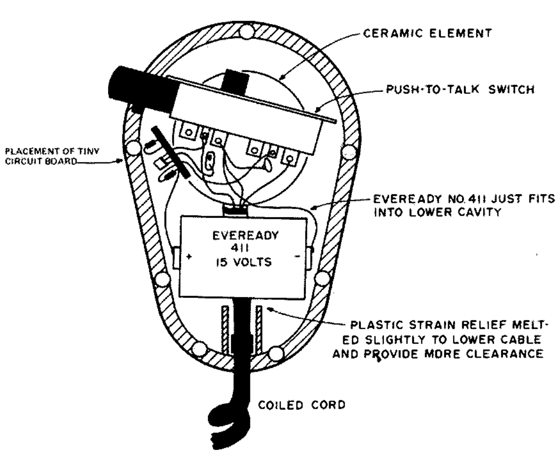

Fig. 2. Pictorial of the inside of the Turner case, which is similar to other types. The preamp circuit board and battery easily fit into the cavity. Battery terminals are soldered too, since a socket would not fit.

Gerald J. Hargett
Pinefields Farm
Route 2, Box 68-E
McComb MS 39648

See the World and Get Paid!

-- merchant marine radio officers: part I

A radio officer is a licensed United States Merchant Marine officer. He is a civilian who holds a dual license: a (minimum) second class radiotelegraph Federal Communications Commission (FCC) license and a United States Coast Guard issued Merchant Marine officer's license.

The primary responsibility of the radio officer is to satisfy the requirements of the International Act (Geneva) For Safety At Sea, which requires certain class vessels to have licensed radio stations and to keep watch on the international calling and distress frequency of 500 kilohertz. Thus in any distress situation assistance may be readily supplied or requested. Secondarily, the radio officer, under the authority exercised by the master of the vessel, handles communications between the ship and the ship's owners. Communications in the form of marine cables received and sent via commercial maritime stations comprise the bulk of traffic. However, modern day merchant ships often carry sophisticated voice communications equipment — single sideband, VHF, medium wave radiotelephones, even state of the art satellite facilities. Some vessels have radioteletype terminals. Weather and hydrographical information is often acquired via fascimile circuits. All this varied "communication" is essential in today's merchant fleet and requires competent, knowledgeable people to fill the role of radio officers.

The purpose of this primer is to provide accurate, practical data to those wishing to investigate a career as a Merchant Marine radio officer. While one must leave home for varying periods of time, the type of work involved is interesting; the travel, often to exotic ports; the financial remuneration, excellent. There is a limited amount of published information available. However, the novice would be hard pressed to gather a goodly amount of pertinent data without much laborious research and its attendant difficulties. I am, and have been for ten years, a licensed radio officer sailing with a major oil company tanker fleet. I have had experience on various classes of cargo and oil tanker vessels. My travels have routed me to the main ports of the world. With this background, I am able to give precise information concerning present day conditions in merchant fleet communications, discuss types of equipment and their maintenance, relate first hand details on major maritime traffic stations worldwide, and offer positive guidance on license attainment and avenues of employment. While not everyone who wishes to can become a radio officer, those with a sincere interest, drive sufficient to acquire the necessary knowledge and certification, and persistence in seeking employment, can become involved in this secure, rewarding and worthwhile career.

Licensing

Anyone aspiring to the career of Merchant Marine radio officer must have the initiative necessary to obtain the minimum license requirements. These are twofold: First, an FCC second class radiotelegraph certificate must be acquired. Secondly, upon issuance of the FCC license, seaman documents may be applied for with the radio officer endorsement. A U.S. Coast Guard Merchant Marine officer license will also be issued running concurrently (five years) with the radiotelegraph certificate. The following will detail possible methods of obtaining this certification.

Many people interested in a seagoing career as "sparks" already have a general background and interest in electronics. More particularly, some are even licensed radio operators in other types of

Photos courtesy of Gene D. Legler, Editor, *Exxon Fleet News*, Exxon Company, U.S.A., Houston TX.

Radio officer Raymond B. Hurley, aboard the 40,000 deadweight ton Exxon Lexington, *an Exxon tanker which carries petroleum products from Exxon Gulf Coast refineries to East Coast terminals.*

FCC service. Radiotelephone permits and amateur radio and citizens band tickets are the more commonly held Federal Communications Commission licenses. If a person has an amateur radio license, then he is familiar with the type of testing procedure employed by the FCC engineers. Like the amateur examination, a commercial second class radiotelegraph license examination is divided into two parts: the Morse code portion (20 words per minute) and the written technical examination (sections of the examinations are referred to as "elements").

Exact regulations governing test requirements are found in FCC rules and regulations. These are grouped into ten volumes. Each volume is divided into sections. Any volume or group of volumes can be obtained from the U.S. Government Printing Office.

Specifically pertaining to commercial radio operators would be Volume 1, Part 13. Volume IV, parts 81 and 83, give complete FCC regulations concerning maritime services. Part 81 deals with land based maritime services (coastal station operation). Part 83 contains regulatory matter directly concerning shipboard stations in the maritime service. Every United States registered vessel with a licensed station onboard is required to have on file copies of sections 81 and 83. If one fully masters the rules contained in these two articles, the "regulations" element of the written examination will be easily passed.

Thus, to qualify for a second class FCC radiotelegraph license (minimum requirement for shipboard operators), one must first successfully pass the Morse code test and then achieve a passing grade on the written examination. Let's delve into each of these two items.

To copy and transmit Morse code properly is an acquired skill and art. There is no "easy" way other than to diligently apply oneself to the mastery of the code. While "shortcuts" and mechanical aids are available to help one learn the sounds and proper rhythm of Morse, it is through the basic learning processes of concentration, repetition, and involvement that any person becomes proficient in handling code. A popular method by which thousands have learned the Morse alphabet is to memorize a few letters at a time until the entire twenty-six letters can be repeated and written without hesitation. Some find grouping letters with similar Morse sounds helpful; others find

that opposite characters such as "A" and "N" prove helpful to their memories. Once a person has a good "sound" memory of the individual letters and numbers, and can recall them instantly, then work can begin seriously on acquiring speed. At this stage "cassettes" or tapes with code practice are an invaluable tool. If one is fortunate enough to possess a shortwave radio receiver, actual Morse signals can be used for practice. To recognize a letter every now and then in a plain language sequence will rapidly lead to faster, solid copy. Schedules of traffic lists and weather bulletins of leading commercial stations are found in Section Ten. Traffic lists are excellent practice, as the calls are repeated twice and are random letter and letter-number combinations. Station WSL, Amagansett Radio, New York, offers excellent weather schedules. This station is one of the fastest on the east coast. The schedules are sent on tape which approaches perfect CW sending. Once a person can copy, for example, the 2300 GMT weather schedule of this station, then the code examination for the FCC license is well within reach.

In learning any new skill, certain levels of achievement are reached and sustained. With Morse code these levels or plateaus can be bridged through increased effort and practice. The range of seven to ten words per minute for most is easily reached. Ten to fifteen wpm (words per minute is based on five characters to a word) requires sustained effort. The goal of twenty words per minute and beyond is achieved after persistent application to practice sessions. The FCC code test runs five minutes. An applicant must copy any one of the five minutes perfectly. Ordinarily this is not extraordinarily difficult. However, the "nervousness" factor is present as one takes the test under the watchful eye of the presiding FCC engineer.

A word here concerning actual code speeds used in shipboard/marine station traffic work. Once a person begins working commercial stations and puts in eight hours daily on a radio circuit (monitoring 500 kHz, weather reports, traffic lists, etc.), speed and accuracy steadily improve. With time, Morse ability becomes somewhat of a reflex action. I am often amused (perhaps forgetting my own real uneasiness once) at shipboard visitors inquiring about becoming radio officers. Most often their main concern is the ability to send and receive quickly. This skill gradually develops and becomes almost an automatic response. This allows one to then concentrate on other, more technical, aspects of shipboard communication, maintenance of the electronic gear being a major item.

As closing comments on the Morse code, it is generally accepted between commercial land marine stations and shipboard stations that "twenty is plenty." In other words, 20 wpm is quite sufficient to handle normal ship communications. However, many coastal stations are extremely busy with lots of traffic (messages) to send and receive. If the ship's operator is agreeable and capable, operating speeds will often go to 25 wpm and beyond. The point is, as long as solid copy is being achieved on both ends of a circuit, speed is adjusted accordingly. It is better to slow down and copy correctly the first time, rather than consume additional time getting "fills" (missed portions of messages – most stations use full "break-in," one operator can signal another of a missed word by the tap of the Morse key). Some ships will handle more traffic than others. Ships on coastal runs (east/west coast and Gulf of Mexico) will generally have occasion to send and receive more messages because of the frequency of ports. There are certain routine series of messages which concern the normal operation of the vessel: arrival times, crew changes, stores, cargo information, and other pertinent data.

With the code test successfully passed, the next hurdle is the written part of the examination. As a practical guide it can be stated that the written test covers three categories of knowledge: Federal Communications Commission rules and regulations concerning the maritime service, basic electronics theory, and basic communication equipment theory (receivers, transmitters, power supplies and related equipment).

There are several question and answer manuals available which cover all of the above categories. Often the answers to simulated test questions in these manuals will go into profuse detail for informational purposes. One recommended Q and A manual is Kaufman's particular edition. This is a comprehensive guide which covers all phases (elements) of various commercial license test requirements. There are other excellent study guides available found at most electronic supply outlets or specialized bookstores. Another text which has a wealth of background information is the *Rider Basic Electronics* series. This can be bought as a single large edition or five individual softbound volumes. It is well illustrated and technically but simply written. Sections on power supplies, transmitters, receivers, test devices, and even transistors are intended to give the reader a broad knowledge of basic electronic circuits and their behavior. Of course, any background a person has in electronics is obviously helpful. The *Radio Amateur's Handbook* is a practical and comprehensive reference work which covers a large segment of the radio frequency spectrum usage. It describes practical operating circuits for radio receiving and transmitting, plus additional chapters on specialized communications systems such as teletype, narrow band FM, satellite communicating techniques and others. Using these and similar aids, as well as a careful study of the FCC Rules, Volume IV, should adequately prepare one to succeed in the written examination. As added insurance to acquiring the license, commercial correspondence courses as well as residency classes are offered by various schools and institutes. Some of these carry a type of guarantee which allows a person to continue studies until successful acquisition of the desired license.

At this point one might well ask, "How much time will it take to prepare well enough to pass the test without waiting to repeat it?" This question is difficult to answer. Each person has different capabilities, memory, and grasp of abstract ideas. Some can memorize quickly and give back information without true understanding. Others can digest material and give back its essence showing complete grasp of the subject. Both approaches will successfully pass the examination; as long as one can correctly answer the multiple choice items (except for a diagram schematic or two), a passing grade will be achieved.

Some people devoting full time to studying for the examination – dividing the time between code practice and study of theory – could possibly be ready to "sit" for the examination in as little as eight weeks. Others, perhaps more methodical or thorough, may require two or three times that amount of

time. In my case, bringing a general background in electronics plus three years experience as an active ham used to CW procedures, the test was successfully passed after a solid month of long days of preparation (often 12-14 hours a day). It is always better to be overprepared to help overcome any nervousness factor. Each person will have to evaluate his or her own abilities in judging how much study is needed to feel comfortable going into the examination. Some attempt it after short preparation, fail it, then restudy and pass it thirty days later. They reason that the first sitting gave them a better idea of what to emphasize in their preparation. This procedure isn't recommended, but it is definitely one which has been used.

It is well to mention here that one's motivation is important in license examination preparation. Once a person has examined a potential career opportunity and set goals to attain membership in those ranks, then the necessary driving force will be there to get one over the difficult steps in attaining the goal. As outlined previously, a radio officer in today's modern Merchant Marine has considerable responsibility. The possibility of disaster, though not a morbid preoccupation, is an ever present reality – an event which places the lives of the crew on the radio officer's electronic expertise. Rigging emergency antennas, quickly repairing faulty or damaged radio gear – all these are paramount to getting out a distress call asking for assistance. Not secondary is the excellent financial remuneration the seagoing radio operator enjoys. A person employed full time for a private company fleet can realistically expect his earnings to be between twenty-two and twenty-five thousand dollars a year on American flag vessels. Union contract ships have equitable salary scales. Employment on some of the larger foreign flag vessels will pay salaries in the neighborhood of ten to twelve thousand dollars per year. In addition to the high wages paid, radio officers, like all Merchant Marine officers, enjoy outstanding benefit packages. These items will be mentioned in another section. Thus, should license preparation require even several years of part-time study to achieve success, the rewards are certainly handsome for those who persevere.

Once the second class radiotelegraph license is in hand, the radio officer aspirant can proceed to obtaining complementary United States Coast Guard documents. The first step toward accomplishing this after the license is acquired is to obtain a letter of commitment. This is a statement of intent, on company/union letterhead, that the bearer will be employed in the capacity for which license application is being made. This letter of commitment is a Coast Guard requirement. It is one method of managing the employment situation and controlling excess licenses being issued. Many companies and agencies involved in ship management may issue such letters of commitment. Also there are two national unions from which the commitment statement may be requested. With union and private union contracts expiring yearly, and new increased vacation benefits being negotiated, it is advantageous for unions to have certified men on file to fill the vacancies that evolve. Often one does not necessarily find final employment with the company or union which issued the original letter of commitment; however, once the letter of commitment is issued there is an obligation of it being eventually honored. One must seek out some marine personnel or union personnel manager who has potential job openings and is willing to take the time to issue the brief commitment statement.

The letter of commitment and the bona fide second class radiotelegraph license are the two major components necessary for acquiring the United States Coast Guard documents. Three other items will complete the file for issuance of the desired seaman's papers: proof of citizenship (birth certificate) and two passport size photographs. One may apply at any of the many United States Coast Guard offices. These are located in all major port cities. A physical examination is required and will be given at government expense. Abnormalities in health will constitute an impediment to obtaining documents. While shipboard life is not particularly rigorous, normal health is required due to often lengthy absences from usual medical assistance. Glasses (corrective lenses) constitute an impediment which is normally waivered. This process of actual application for Coast Guard documents may require one to two days depending on number of applicants to be processed. However, once completed, the actual certifying papers ("Z" card and Merchant Marine officer license) will usually be received in six to eight weeks.

While the licenses crown much effort and give a definite satisfaction of achievement, two major steps remain for becoming a full-fledged radio officer: initial employment and obtaining the six months sea service endorsement.

Employment Procedures

Federal Communications Commission regulations make it mandatory for a licensed radio officer to acquire six full months (180 days) of sea service on a United States flag (U.S. registered) vessel equipped with a licensed radio station before he or she is able to sail as a single operator. Since the majority of U.S. merchant ships carry only one operator, compliance with the six months endorsement requirement becomes essential for a future radio officer career. While a major deterrent to many licensed applicants in utilizing their hard earned documents, the FCC six months endorsement ruling evidences bureaucratic wisdom. A newly licensed radio officer simply must get six months' actual on-the-job-training experience before he is deemed truly qualified to assume the full duties of a radio officer on a single operator ship. Often the road to the six months endorsement is strewn with faded dreams, foundered hopes, and bitter disappointments. This section will endeavor to guide a newly licensed radio officer along this road so that the ultimate goal of full single operator status and security may be reached.

From the above discussion it is obvious that initial radio officer employment is closely linked with the necessity of achieving the six months sea service endorsement. A quandary is encountered: One cannot "sign on" as a single operator radio officer because the experience is lacking; the experience cannot be acquired because one is not allowed to sail single operator without the six months' sea service. What courses of action can alternatively be pursued?

A brief discussion is relative here concerning classes of vessels. Without going into confusing tonnage figures, let it suffice to say that international regulations require certain categories of ships

(generally merchant freighters, tankers, bulk carriers, passenger liners) be fitted with compulsory radio stations. Such equipment must be licensed, and a licensed radio operator must be a part of the vessel's complement. Other smaller types of sea craft (deep sea towing/tug boats, research vessels, fishing craft, large yachts) may be voluntarily equipped and manned. It is on this latter class of craft that new radio officer license holders can find employment leading to the six months sea endorsement.

In past years when the United States had many passenger ships registered, these were the normal avenues of employment leading to the six months endorsement. These vessels often carried three or more radio officers. A new license holder could apprentice on one of these ships as junior operator and acquire a wealth of experience in operating procedures, traffic handling and other job facets. Today there are no United States passenger liners. Some of the larger freighters carry the legal maximum of twelve passengers, which still allows the company to employ a single operator. The many cruise ships plying the oceans today are all registered in foreign countries. A person with United States documents may certainly apply for employment on these foreign flag vessels and often with success. However, the time accrued on such non-United States-registered ships does not count toward achieving the six months sea service endorsement. But the experience one can gain from such ships can be very valuable.

Other than seeking out the voluntarily equipped sea craft to acquire the needed 180 days' sea service, another alternative is available. A person may sail as a lesser unlicensed rating on a U.S. vessel — ordinary seaman, messman, utilityman, oiler — and with the company's and master's permission he or she may put in off watch hours in the radio shack in order to accrue the required experience. This scheme will probably take longer to acquire the endorsement; however, at the same time, pay is being received for one rating, few expenses are incurred aboard ship, and the opportunity of achieving the six months endorsement is available. Some companies or unions have programs whereby they will assign a newly licensed radio officer as second operator on a single operator vessel at reduced wages in order to allow the legal acquisition of the sea service sanction. This is usually done when openings are imminent. Fortunate is the person who applies to a company at such a propitious moment.

Summarizing, a person properly licensed for radio officer employment should vigorously pursue every avenue of opportunity. Persistent checking for union openings (both national and private company unions), applying to government agencies which employ civilian licensed personnel (MSC, Military Sealift Command, U.S. Coast and Geodetic Survey Agency), arranging interviews with owners of deep sea towing boats (often a combination of "deck hand"/radio operator position will be offered) and large yachts (information can be gleaned from brokerage houses for such craft): All these paths vigorously pursued will eventually yield positive employment commitments which will lead to the

necessary and coveted six months sea service endorsement.

It was my experience after applying at the above listed sources that a three to four month wait – a discouraging period with no word from the myriad applications filed – was unavoidable. When that time passed (time used to gain experience as a single operator on a foreign flag vessel), the offers began trickling through the mail. Eventually choices could be made.

While a formidable obstacle, the six months endorsement, once achieved, offers a reasonable degree of future job security. The numerical job possibilities increase a hundredfold. By this time many contacts will have been made (keep a notebook). Offers of "come see us when you have the endorsement" should have been filed for future reference. One will also be able to make a more mature judgment concerning whether to make a career in one of the national radio officer maritime unions or opt for private company fleets. Each choice has advantages and disadvantages. It is a question of committing oneself one way or the other. A young man or woman (25-35) fully qualified as a single operator radio officer has much to offer the shipping industry. Reciprocally, shipping companies are interested in stable, career-oriented personnel.

Salaries vary among various radio officer employers. As mentioned before, a person who sails full time as a single operator on an American flag vessel can anticipate earnings beyond the twenty thousand dollar level. Benefit packages also vary, but in general are excellent and comprehensive. Hospitalization, annuity plans, pension plans, life insurance, equity funds, and stock options are some of the types of total packages offered. Vacation time (paid leave is the colloquial expression) averages ten to eighteen days for each thirty days of shipboard employment. Efficiency dictates companies to allow this time to accrue. For example, several tanker companies will work their officers eighty to ninety days, then grant forty to fifty day paid leaves. Items such as base salaries, overtime rates, vacation periods, and other working conditions are negotiated frequently and upgraded to keep pace with industrial trends.

Thus, to a person contemplating a seagoing career, the rating of radio officer offers a unique opportunity: above average wages, worldwide travel, participation in outstanding benefit plans, retirement at a relatively early age with potentially large savings and an adequate pension. It is these incentives which should urge one to pass the discouraging phases of becoming completely qualified as a radio officer.

Reporting Aboard Ship

This section is a "tour" for the uninitiated of modern shipboard organization and routine. Particularly, it will outline a normal procedure for a radio officer to follow when reporting aboard a vessel. Most people seeking shipboard employment will probably have visited various types of oceangoing ships. (This is an excellent idea. Ask for the radio officer – most will be helpful in giving a ship's tour and a detailed explanation of the electronic equipment on board.) Thus a general familiarity with the physical layout of ships will be acquired.

A merchant vessel like any business organization is structured along certain lines. The following is a brief explanation of shipboard organization. The personnel on a vessel are divided into two broad categories: licensed officers and unlicensed crew members. Operationally, these people are then working in one of three departments. Deck department is responsible for the safety and navigation of the vessel, the maintenance of deck spaces, and the supervision of cargo operations. Engine department is responsible for the operation/maintenance of the power plant (steam or diesel), systems upkeep, maintenance of cargo handling equipment (winches, pumps, etc.), and overall responsibility for the mechanical aspects of vessel operation. Steward's department does the housekeeping of the vessel: preparation and serving of meals, cleaning of quarters, care of linen and other housekeeping chores. The departments and their specific members are listed below. Actual number of crew varies from ship to ship. Officers are considered supervisors. Other crew members have Coast Guard papers with specific job or rating endorsements.

Deck (Captain overall in charge)
Chief Mate
Second Mate
Third Mates
Radio Officer
Ablebodied Seamen
Ordinary Seamen
Bosun

Engine
Chief Engineer
1st Engineer
2nd Engineer
3rd Engineers
Oilers
Wipers
Pumpmen

Steward
Steward
Chief Cook
2nd Cook
Messmen
Utilitymen
Gallyman

Ship's routine is conducted in periods of time called "watches." Normally a crew member or officer will stand four hours on watch and be off watch for eight hours – thus midnight to four am, four am to eight am, eight am to noon and then repeat the sequence. This system works well and contributes to the safe conduct of the vessel. Some ships will "break" sea watches in port allowing doubling up for more time off in port. Others will maintain the four on, eight off routine without change.

The radio officer by law must stand one-third of sea time at watch. It is a safety watch consisting of monitoring 500 kilohertz, the international calling and distress frequency. All ship's communications are conducted during watch hours whenever possible. While leeway is encountered as to actual hours of radio watch, custom dictates the usual hours of 9 am to noon, three pm to five pm, six pm to nine pm. These hours allow for the copying of appropriate traffic lists, weather schedules and other communications matters. While at sea, when the radio officer is not on watch, an automatic device called an auto-alarm stands guard on the distress frequency sounding an audible alert should a distress situation develop.

A new officer reporting aboard a vessel will usually proceed directly to the radio room ("shack") to meet the person to be relieved. If the captain is available, introductions will be made. Should the ship be on a coastal run, the radio officer will be signed on by the master of the vessel and officially become part of the ship's muster. Signing on for foreign voyages is done before a shipping commissioner who comes to the ship for this purpose. License data is always incorporated into the ship's articles.

New radio officers will find that the person they are

relieving will be happy to spend time showing them the "ropes." Inspection, discussion of, and actual demonstration of the various electronic equipment will be part of the orientation. If the vessel is on a regularly scheduled itinerary, schedules, company procedures, and particular communications problems will all come under discussion. Reports, forms, log keeping, and maintenance procedures also constitute the relieving radio officer's briefing. As a new radio officer, don't hesitate to ask any and all questions. Once the radio officer you are relieving departs, the responsibility rests upon your competency. As a documented, qualified Merchant Marine radio officer, you will be expected to handle communication duties in a professional competent manner.

While bewildering the first time, one will find that experience allows this relieving procedure to become an informal, quick routine. The radio officer going off the vessel will usually leave a few typed paragraphs with key information. Usually, expected spare parts requisition forms, upcoming maintenance, or ordered shore-side repairs will comprise the file to be turned over to the relief. As physical layouts differ, a spare parts diagram location is usually found among the pertinent papers.

After official installation in the new capacity, the fledgling radio officer will usually have several days (except on tankers) while the vessel works cargo before sailing. This time can profitably be spent thoroughly informing oneself concerning the physical aspects of the electronic equipment. Radio office files will yield individual instruction manuals for each piece of gear. A careful reading of the manual with the radio equipment in front of you will help complete familiarization with the station.

While not going into specific details about various types of radio room equipment, for informational purposes most American flag vessels will be fitted with either ITT Mackay Marine or RCA Radiomarine installations. Sometimes there is a combination of both types of gear on one ship. Individual units such as transmitters, receivers, auto-alarms, auto-alarm keyers, battery chargers and so forth will often be consoled for convenience. This method provides a neat, efficient operating position. Many different manufacturers provide radiotelephone equipment. Collins Radio, RF Communications, CAI, Motorola, ITT, and RCA are but a few of many suppliers of single sideband, FM, and AM radiotelephone devices.

Radio rooms on foreign flag vessels are well equipped with systems provided by their respective countries. Two examples would be Marconi marine equipment found on many United Kingdom vessels and Electronik or Dansberg installations found on ships flying flags of the Scandanavian countries. Numerous other quality radio equipment manufacturers produce gear for vessels not flying the United States ensign.

Besides maintaining a listening watch on the distress frequency, the radio officer will generally copy weather bulletins twice a day. Each bulletin forecasts twelve hour weather system movement. If the vessel is equipped with facsimile receivers, one map is usually made daily unless some disturbed weather is being closely monitored. Other duties of the radio officer are to listen to applicable commercial station traffic lists for messages, perform required FCC tests, keep a current log, and generally keep the station in good operating order. ■

The Wind Counter

--the digital wind sock

Dave Brown·W9CGI
RR 5 Box 39
Noblesville IN 46060

Well, having voraciously consumed my recently arrived *73 Magazine* for March 1976, I concluded as always that therein contained is a wealth of information. Lest you think I conceitedly refer to my own two articles — I don't — I am referring to the great information contained in the article "Inherit the Wind" by W2AOO on page 72.

For several years I have been looking for a "weather station" device for this QTH, since I am out on a farm and rather unprotected from the wind — as a photo of our EME array in an earlier *73 Magazine* will testify!

The intent of this article is to add to Warren's fine article a couple of ideas that came up while rapidly brewing up his device for use here. Some of the ideas are purely mechanical ways of doing his ideas using the available parts that were either around in my "junque" box, or easily obtained due to past experience building one project or another.

Warren's idea using the L'eggs pantyhose containers is *great!* I have saved the darn things for years now, merely because there *had* to be a good ham use for such an item. It's like the plastic facial tissue containers that came out awhile back — they became good oval speaker holders in my test bench! Jello molds with a perforated cover make great smoke traps for smoke alarms, etc. Leave it to a ham to find a better use for the XYL's something or other. Along the same lines, a great material exists for outdoor enclosing of devices (loading coils, relays, etc.), and gets put into service here to house the wind pickup "container" mounted up my tower. That material is the PCV irrigation tubing available at supply houses, hardware stores, and most lumber yards. I used it to waterproof the buried cables going out to the EME tower house, and had a few short pieces left over. The tubing or pipe is approximately 4.250" in outside diameter, has .125" walls, and is quite rigid. It cuts readily with a fine hacksaw blade to the length you want. Nearly all the same sources carry accessory items for the pipe, such as the "Y", "T", and reducers, but not all carry the end cap. They do exist, and looking for two of them is well worth the effort, as it makes a very weather-tight enclosure when you slip these end caps over the pipe you have cut to length.

While at the store, look over an item called "chipboard," "particle-board," or "underlayment," depending on where you live. It comes in 1/2" or 5/8" thickness and in 4' x 8' sheets, though often smaller 4' x 4' or 2' x 4' pieces are sold for the weekend carpenter. This material cuts easily with a saber saw or even a hand jigsaw, and can be cut in circles to go into the PCV pipe to mount the top and bottom bearings. It can even be cut out and drilled for a platform for the LED and phototransistor pickup.

If you have read the

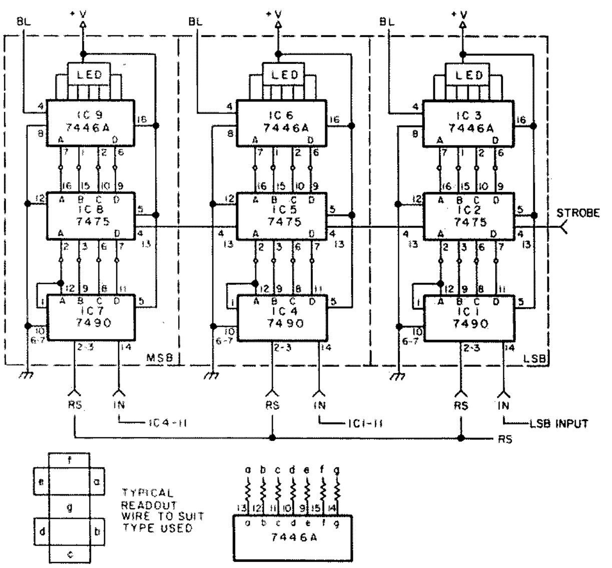

Fig. 1. Counter and readout. 7490 pins 8, 9, 11, 12 and 7475 pins 9, 10, 15, 16 should be brought to module plug; therefore a module socket of 14 lines is a minimum requirement.

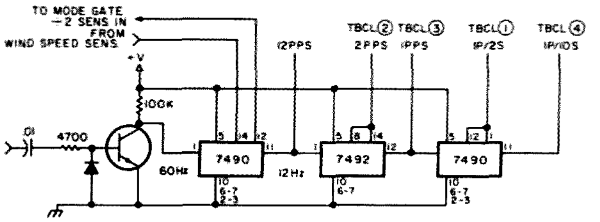

Fig. 2. "Cheapy" timebase.

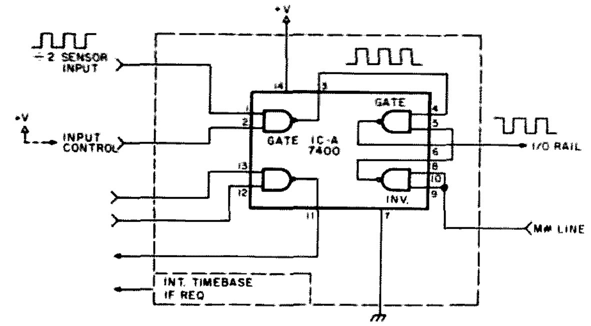

Fig. 3. Mode gate.

W2AOO article, you will readily see you are not going to get the 7" disc into my 4" I.D. pipe! Not to fear. There are easy ways around this.

I had held off building such a wind device for a long time since I was unaware how I would calibrate it. Also, I did not want to tie up a counter all the time, but for those of you without a counter, I fully agree with Warren – now is the time to build one! The K2OAW counter I built from three 1973 *73 Magazine* articles is a great starting point, and there are many updates. I am working on an article now on a 100 MHz basic and 650 MHz with scaler version. It uses the basic board from the K2OAW counter, since I already have built that one. With the TTL prices what they are, you are no longer talking about a 300-500 dollar instrument (i.e., to go from our 100 MHz to the 650 MHz is now about $19.95 – right out of a *73* ad – more on that another time).

The "counter" I am going to describe here is a special purpose unit, and as such can be built for even less than a home brew station test bench counter for your shack. It keeps the price to a minimum by doing such things as using the 60 Hz line frequency as a reference, but can be easily changed to a crystal timebase if you so demand. It has a "record" feature that you can build in, leave out, or add on later. It has a multi-mode deck for using it with more than one use that again can be left off, or added later. The very basic unit is therefore shown first for the wind speed indication only. The three digit capability is required for some of the later uses. Fig. 1 shows the basic display board and is built as a mother board with plug-in modules so things may be easily modified or added onto.

The basic counter and readout portion has been covered many times and should not need a detailed explanation. A stream of pulses comes from the pickup unit (wind speed in this case) through a control gate to the first counter. Each counter is a decade; thus the readouts read in ones, tens, and hundreds for the least significant to most significant bits or numbers from right to left.

LED readouts are so inexpensive now it doesn't pay to use anything else – see *73 Magazine* advertisements. The same source goes for the TTL IC logic required. If you don't mind the logic blinking during the count or are willing to add on the 7475 latches of my circuit, a good PC board can be readily had by building up the WA7SCB "counter" in a *73 Magazine* article from January or February this year. Since no high speeds are used, much lower power consuming MOS logic can be used for some of the circuits. I know of MOS equivalents for at least the 7400 and 7490 and they are the 74C00 and 74C90. They are pin for pin – just remove a 7400, plug in a 74C00, etc.

Fig. 2 covers the cheap 60 Hz timebase used in our inexpensive counter. A small portion of the 60 Hz is capacitively coupled out of the power supply to a discrete squaring circuit or can be fed to a 7413 Schmitt trigger IC. Hereafter, the output from this module is called the TBCL, or timebase clock.

The squared 60 Hz output from the 7413 or discrete squarer is fed to the ÷ 5 input of a 7490. Its output at 12 Hz is fed to a 7492 wired as a ÷ 6, then ÷ 2, for a 1 pps square wave output. The ÷ 2 function of the 7490 will be covered later. Of course for better accuracy, any one of a number of timebases leading to the same output (counter crystal controlled timebases, etc.) can be used into the same inputs that call for TBCL pulses.

Next, if more than one input is to be counted as I have plans to do (wind direction, etc.), some form of mode input gating must be used. Fig. 3 shows a simple gate arrangement using only one IC. Provisions for placing a secondary timebase on this module for future use are also shown. More on that later.

The incoming pulses from the generator-sensing device enter the mode gate at ICA-1, one side of a 2-input NAND gate. The other input, ICA-2, is used differently with different modes. The dotted lines show the hookup for the wind speed only version. ICA-3 is the output of this NAND gate and it goes to the input of a second NAND gate, ICA-4. This NAND gate allows the pulses to pass on to a common I/O line or "rail" for all modules only when the other input, ICA-5, is high. This occurs when ICA-8 is high, which is when ICA-9 and ICA-10 are low. They are tied together and

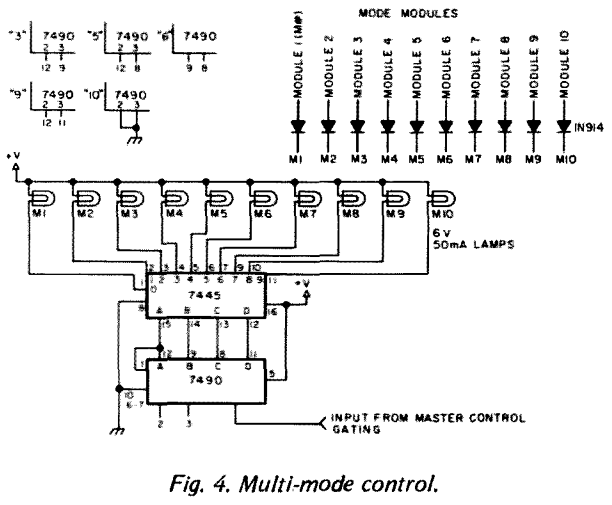

Fig. 4. Multi-mode control.

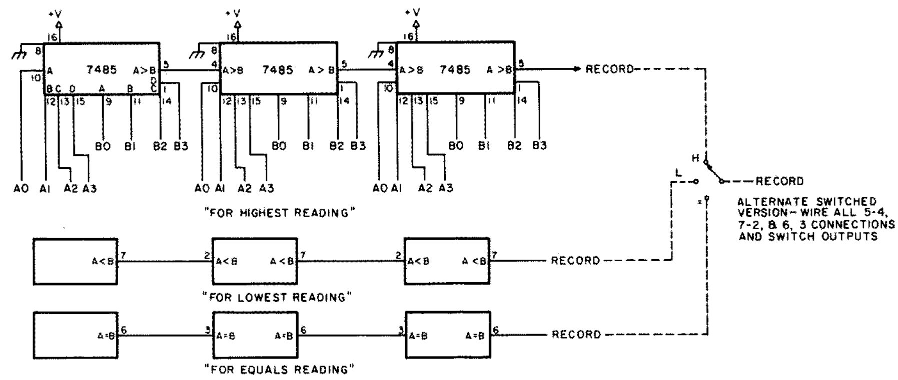

Fig. 5. Recording module. Pin connections: (A) A0 to IC7-12, A1 to IC7-9, A2 to IC7-8, A3 to IC7-11, B0 to IC8-16, B1 to IC8-15, B2 to IC8-10, B3 to IC8-9. (B) A0 to IC4-12, A1 to IC4-9, A2 to IC4-8, A3 to IC4-11, B0 to IC5-16, B1 to IC5-15, B2 to IC5-10, B3 to IC5-9. (C) A0 to IC1-12, A1 to IC1-9, A2 to IC1-8, A3 to IC1-11, B0 to IC2-16, B1 to IC2-15, B2 to IC2-10, B3 to IC2-9.

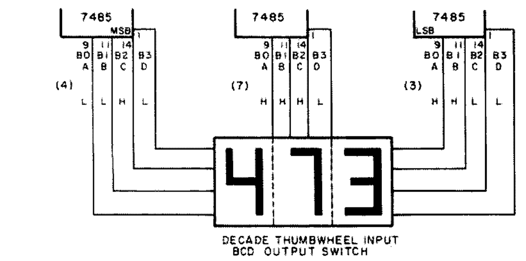

Fig. 5a. Wiring changes for fixed preset figure for B data.

this NAND gate is wired as a simple inverter. Again, the dotted lines show the wind speed only version. The M# line entering at ICA-9 and 10 is covered in the next module.

More than one mode may be monitored by adding the Fig. 4 multi-mode module. Modes may be added on easiest by certain numbers (3-5-6-7-9-10), and these combinations are shown. The module is an encoder (7490) run from the timebase and driving a 1 of 10 decoder (7445). The decoder outputs must be committed externally to +V in this decoder, and the easiest way to do this is to run each output to +V via a 6 V, 50 mA lamp. These lamps then also indicate what mode you are in. The diode is added to each line going to a mode module as added protection. As the timebase drives the encoder, the decoder steps from mode to mode, enabling the input modules as it goes.

An added feature I wanted around my QTH was an easy way to "record" the high or low readings for the day, and while reading through the first writing of this article and the W2AOO article, I realized how similar this requirement is to that of our EME automatic beam steering; therefore that type of device is presented here. Since most or all will want it, I did make it slightly more complex than a basic version would be, but it may be built in part for high only, etc., very easily. Just delete the functions you don't want. An example of use is the best demonstration of usefulness I can think of and reads as follows. First, the record feature can be used in a single mode device only, or where the 7475-7446 readout portion of the instrument is duplicated. It is seldom required to "record" more than one mode reading, so the version shown is for a single mode instrument. You may choose to record the highest readout (A > B), as in the highest wind speed, or only winds above a preset (by you) readout, in which case the readout is stored and the fact it was exceeded used to activate an external device (i.e., a crankup motorized tower lowered in high winds or an alert tone device triggered during tornado season to awaken the family). Or, you might choose to record and/or use the lowest reading (A < B). We are working on other sensors such as temperature, humidity, etc., and you may want to record the lowest temperature of the day (got your antifreeze in yet?) or temperatures below a preset reading – such as 32 degrees F (got the heater strip on the water pipe and the cat in for the night?). Or by adding a later clock module of sorts, you can turn on the house lights at dusk, etc. (A=B). It really can be made very versatile by building up and adding on our modules of future articles. Maybe you can think of something you want to monitor? Drop me a line and we'll see if we can write it up.

For you computer guys, we are already working on a little module to take the readout's information to the outside world as parallel or serial data and on to a teletype (hard copy of weather during a CD storm alert?), or to your computer to do goodness knows what. Using the computer at work is as close as I have gotten to that part of our changing hobby so far, but it does get my interest.

I'm sorry there are no board layouts at this time. We are very busy working on sensors, including wind speed, wind direction (leave extra room in the outdoor PCV pipe unit!), temperature (indoor/outdoor), humidity, barometric pressure, and such

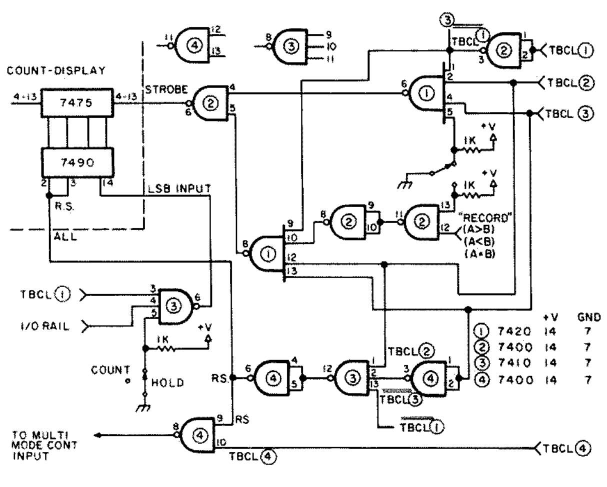

Fig. 6. Control gating module.

others as smoke, fire, and burglar alarms. The burglar sensor is such that shorting around it or shorting it to ground instantly sets it off! The sensors for the most part will be single IC devices. They generate a square wave that is modified by the item being sensed.

As for getting the wind speed running, cut your pipe and chipboard and arrange all the items just as in the original article. Your disc, however, should be cut to 3.75" to 3.80" in diameter to clear the inside of the PCV pipe. This means you have a radius of 1.90". Use a compass and scribe a circle of this radius on the 1/16" thick metal material as in the original. Scribe a line through the center and crossing both sides (straight line through the middle and crossing the scribed circle). Measure from the center along the line one way to a point 1.40" (1.400563499" for extremists) from the center. Center punch this point and the center. Drill the hole at the center 1/4" in diameter, and at the 1.40" point 1/8" in diameter. Now you can mount and assemble as the original, aligning the LED above and the phototransistor below the 1/8" hole. As the disc rotates, the hole produces a pulse every revolution. On a 1.40" radius, or 2.80" diameter, the circumference covered per revolution (or pulse) is 8.796". Every two revolutions (two pulses) the hole on the 2.80" diameter circle covers 17.59"; thus there are 2 pulses produced per second for a 1 mph wind. The sensor signal is routed through the mode gate, through the leftover ÷ 2 function of the 7490 in the timebase, and on to the control gate, as a 1 pulse per 1 mph, just as the original.

The control gating may vary or change as new sensors are developed, so it, too, was built as a module.

It should be easy to follow the gating in the control section. Just use the rule that the inputs to a NAND gate must all be high for the input to be low, and conversely, if any input is allowed to go low, a desired output high can be gotten.

I hope by breaking this up into module construction, each of you might find your own uses, be able to build your own versions, or be able to learn a little about TTL logic and use the circuitry toward your own designs. More input sensors and modules will follow as we perfect them, and I hope we then have more time so that board layouts may be provided for those who prefer PC board construction. I know how you feel, because I certainly prefer it. It makes it very hard to make any mistakes in wiring – hi.

At the cost of today's Pony Express, a SASE is sure appreciated for letters requiring a reply. I have gotten them on letters making only comments or suggestions for future articles, and while the loose stamps were appreciated (I do mail letters and I happen to collect stamps as another hobby – hi), they aren't required for that type of mail. Thanks anyway! On those types of letters, if they can be fit on a post card, by all means save yourself some money, and the comments and suggestions *are* really appreciated. On future board availability, etc., I will try to keep all advised via the *73* letters column if that is o.k. by you and Wayne (*sure . . . Wayne*). We have drawn up several "general" TTL type circuit boards that may be of interest to all, and I'll try to put them all together for a shorty article of nothing but that if there is an interest. They are very handy to "breadboard" up more complex circuits. You end up with multi boards, but maybe that isn't so bad. I hope this article helps make amateur weather observers of you. You would be surprised the effects it has on our radio hobby, and how appreciated the data is to your local CD net and weather bureau during the rough storms, tornadoes, etc. We sure have been warmly received by the local weather bureau during such times. Until the next modules, 73. ■

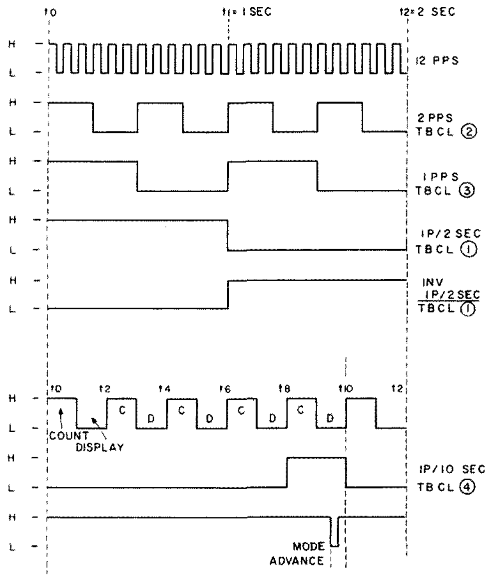

Fig. 7. Timing chart.

Hank Olson W6GXN
P.O. Box 339
Menlo Park CA 94025

The S38 Is Not Dead!

-- a tale of resurrection

I recently attended several San Francisco Bay Area ham auctions, with attached flea markets. For no particular reason, I ended up with an old Hallicrafters S38C, in the most bedraggled shape imaginable. The very condition of the old receiver was a challenge, and the steps in its resurrection to a useful receiver will be recounted herein. The hope is that these easy steps will inspire other owners of this all-time popular short-wave receiver to restore them. After all, there is still a large group of young experimenters, SWLs, and would-be Novices out there saving their quarters and dimes to get their hands on anything that will function as an HF receiver. To meet this group, simply attend the next ham auction or swapfest; it will restore your faith in the younger generation.

My receiver, as acquired, had no knobs, a torn speaker cone, a rusty cabinet, a missing receive-standby switch, no dial pointers, and (of course) was inoperative. Should yours be in similar shape, your first move should be to get a copy of the circuit (Sams' set 190, folder 4), preferably from a friend who does service work. Secondly, the speaker should be replaced; horizontal mounting of speakers in the tube-type sets eventually ruins them, so you might as well do it right away. Next pull the chassis, check tubes, and replace as needed. Be sure to replace the #47 pilot lamp if it's open, because otherwise you'll be buying a new 35Z5 rectifier tube shortly. A type #755 pilot lamp, with extended-life, might be considered here. The entire complement of eight or nine tubular (drippy, paper-wax type) capacitors should be replaced with the newer mylar and ceramic disc varieties. This step avoids the step-by-step isolation of a faulty capacitor, and should save time in the long run. I replaced the three-section electrolytic capacitor on general principles.

In the cosmetic area, I made new dial pointers by soldering short pieces of 1/16" brazing rod to grid-cap clips (1/4") and painted them white. The cabinet was wire-wheel cleaned of rust, masked, and painted with a spray-can coat of grey enamel. A new bottom plate was also made of sheet aluminum, and rubber feet attached. A set of four knobs (not original Hallicrafters, but adequate) was installed, and a new slide switch was put in the "receive-standby" position.

With these efforts, my receiver gave some indications of life, at least on the BC band. A simple i-f and rf alignment, following the procedure in Sams' with a signal generator, greatly improved sensitivity. At this point, the S38C was judged to be "as-good-as-new"; that

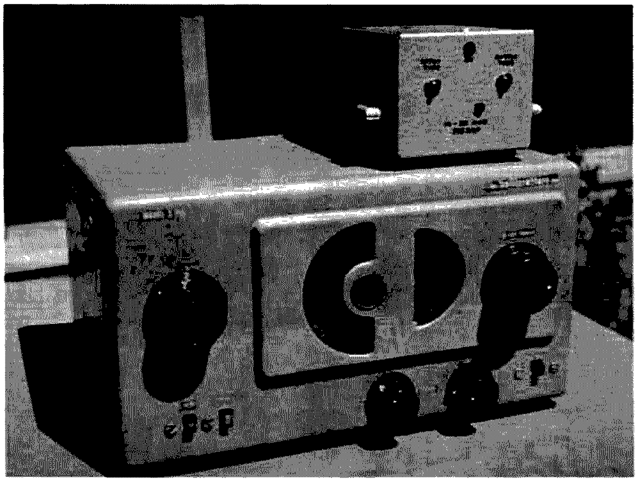

Hallicrafters S38C after resurrection, with FET preamp atop.

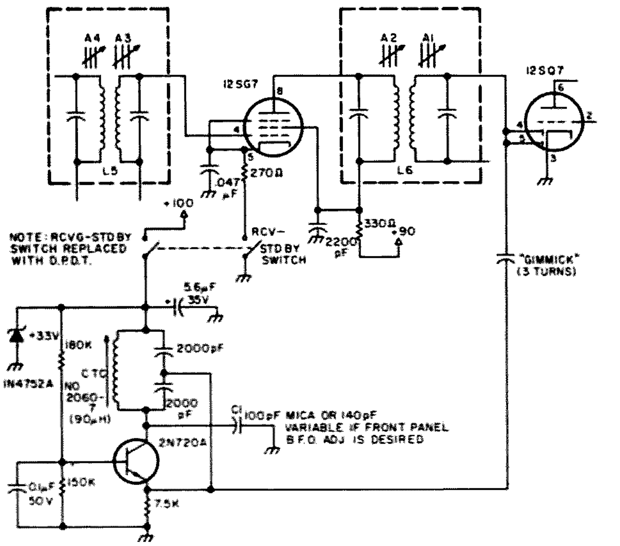

Fig. 1. New BFO in S38C. C1 = 100 pF mica or 140 pF variable if front panel BFO adjustment is desired.

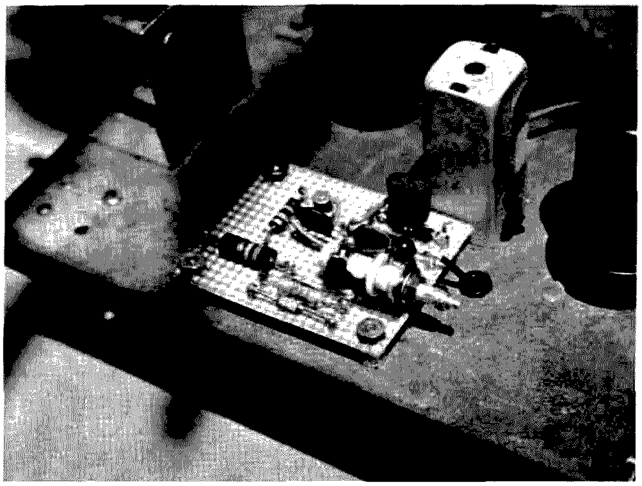

Transistor BFO mounted on S38C chassis.

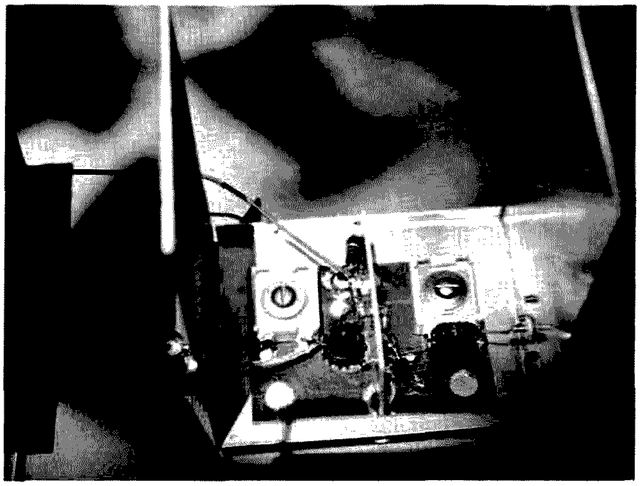

Rf portion (except power supply) of 14-30 MHz preamp, mounted on section of copper PC laminate.

is, a *fair* receiver considering its design limitations.

Changes and Additions

The BFO function in the original S38C is fulfilled by causing the i-f amplifier to go into regeneration. This rather critical circuitry was eliminated, and a more conventional BFO added. Since the S38C is an ac-dc type of radio, it was easier to make the new BFO a transistor type and avoid heater voltage problems. The new BFO and its placement in the S38C circuitry are shown in Fig. 1. A few milliamps from the B+ are used with a zener to provide the +33 volts to operate the BFO. If a front panel BFO control is desired, C1 can be made a variable (140 pF) rather than a fixed capacitor.

The shortcomings of the S38C are several: lack of image rejection, inadequate selectivity, and inadequate sensitivity (for starters). The sensitivity can be increased and image rejection improved by the addition of a preselector. There are many adequate designs for such preselectors, but most of these date back to the same era as the S38C and similar receivers.[1,2,3] The photo shows a simple preselector using an FET. This is an add-on unit, not designed to be included in or powered by the S38C.

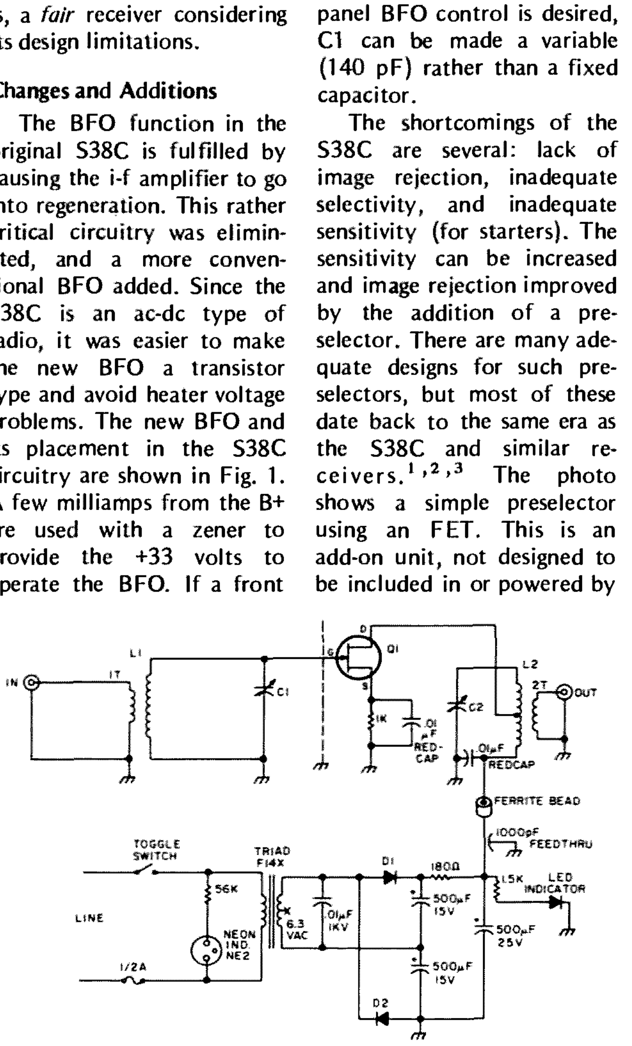

Fig. 2. Self-powered 14-30 MHz preselector for S38C. C1 = C2 = 50-500 pF (Miller 160B); L1 = 10T #22, T50-10 Micrometals core (0.37 uh) with 1 turn link; L2 = 10T #22 with c.t. and 2 turn link on T50-10 Micrometals core; Q1 = MPF102, HEP-802, HEP-F0015 (all Motorola); D1, D2 = 1N4002, HEP-R0051 (Motorola). Ferrite beads and Micrometals cores available from Amidon, 12033 Otsego St., N. Hollywood CA.

The preselector improves the overall receiver noise figure, and thus its sensitivity in the 14 to 30 MHz portion of the HF band. There is less to be gained by extending its range by adding the complication of coil switching for lower frequencies, since these frequencies are usually sky-noise limited. The preselector will help not only sensitivity but can also help reduce cross-modulation from strong out-of-band shortwave broadcast stations. The value in reducing images is noticeable too since the image is always 2 x 455 kHz away from the desired frequency. That is, at 14 MHz the ratio of desired frequency to image offset is 15/1. The coils used in the preselector have unloaded Q values of 100 or greater, and so would be expected to be of some help in image reduction. The Qs of the tiny powdered iron core coils used are nearly as high as one would obtain with air core type coils, and have a totally self-contained magnetic field. This latter fact makes it possible to use them in a compact preselector design with a minimum of shielding, yet one still having good selectivity and stability. The sensitivity improvement on 14, 21, and 28 MHz was measured to be between 10 and 20 dB; this is a significant improvement over the original. The basic preselector's circuit is shown in Fig. 2. The power supply section is not shown, as its layout is non-critical. The supply and preamp board were later combined in an LMB-140 box chassis, to package the unit for convenient operation. Note that two compression mica variable capacitors were used to tune the preamp; this was due to the scarcity of air-spaced tuning capacitors nowadays. Since *these* capacitors are screwdriver-adjust types, some may wish to substitute air spaced types – or modify the compression screws for shafts. If one band, say 15 meters, is used primarily, only slight retuning is necessary across the band, and a screwdriver adjust system is okay. The two 0.1 uF bypass capacitors in the preamp should be low inductance ceramic types (Erie Redcap are specified) to insure low rf impedances to ground at these points. Aerovox, Vitramon, and others make similar types of capacitors, however. ■

References

[1] "High Gain 5-Band Preselector," *Radio Handbook*, 7th Ed., Editors and Engineers, 1940.

[2] "A Bandswitching Preselector for 14 to 30 MC," *The Radio Amateur's Handbook*, 29th Ed., ARRL, 1952.

[3] "The R-9'er," *General Electric Ham News*, Vol. 1, No. 4, Nov.-Dec. 1946.

ID with a PROM

- - and program it yourself

William Hosking W7JSW
8626 E. Clarendon
Scottsdale AZ 85257

Here is another CW identifier using a Programmable Read Only Memory. Several circuits using PROMs have been floating around, but most of them were lacking one or more of the features I wanted. For my applications, I wanted a timed hold-off which would keep the IDer from being re-keyed within a specified time period. I also wanted the IDer to re-identify at the end of the time-out period.

This version of the identifier is about third generation, and conquers, I hope, some earlier limitations.

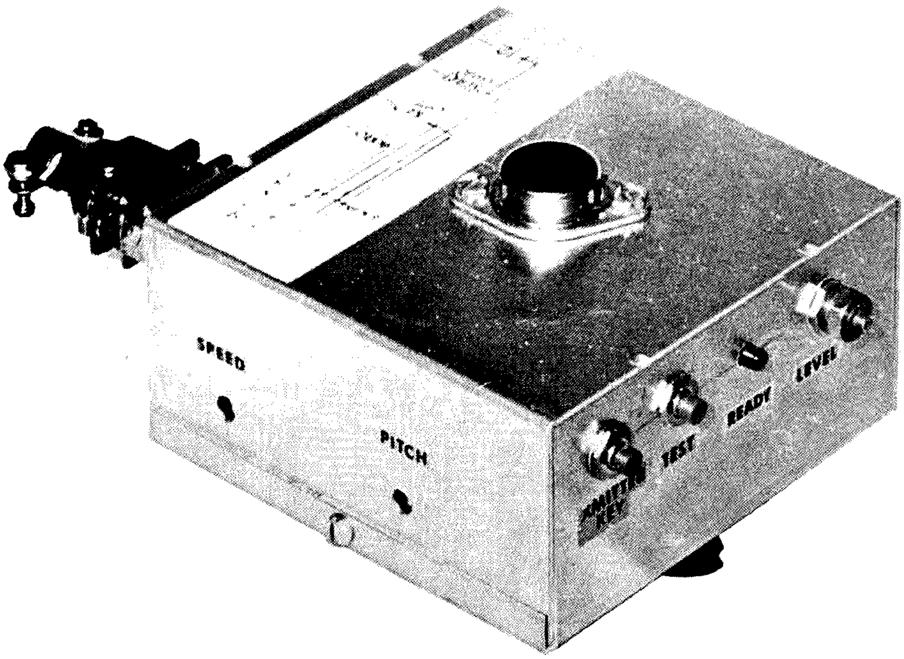

External view of the prototype identifier. The transistor on top is a five volt regulator. The XMITTER KEY button will key the PTT line. The TEST button sends the ID without triggering the timers. The READY is an LED (not shown on the schematic) which is on when the IDer is ready to be keyed. LEVEL sets the output level to the transmitter. PITCH and SPEED are self-explanatory and are screwdriver adjustments. The plug on the back was an afterthought in this case, for interface with our repeaters. The case is a 4" x 4" x 2" minibox.

Circuit

The basic CW generation technique is not new, and consists of U1, 2, 3 and 4 in Fig. 1. U1 and U2 are ripple counters whose input is a 555 clock. The first three stages of the counter drive a multiplexer/data selector, U4. Using the counter input, U4 repeatedly scans the memory (U3) outputs B0 and B7 for highs, which in turn appear on the output of U4. The last five stages of the counter provide the address inputs for U3. This input advances one count for each scan of the output bits. The result of this scheme is that the memory output is scanned sequentially (B0 to B7) for each word in order of address.

I used an NE555 for the clock and a pair of gates cross-connected as a flip flop to start and stop the clock. A pulse from the start circuitry sets the flip flop and starts the clock. When the end of the count is reached by U2, it triggers monostable U6A, which resets the counters and the start/stop flip flop. The inputs to U6A can be programmed to stop the counter after either 128 or 256 bits.

The start circuitry consists of monostable U6B and hold-off timer U7. When the input is grounded, it triggers the monostable through gate U9B. The pulse out of the monostable sets the start flip flop and starts the hold-off timer. The hold-off timer is an NE555 set for about 3 minutes. During this period, the monostable is kept from being triggered by further input keying.

When the timer releases, its output is capacity-coupled to the start flip flop. This pulse starts the identifier without restarting the timer. The output of the start flip flop is also used to turn on ½ of U11, which is used to key the transmitter.

A problem I encountered with this circuit was having

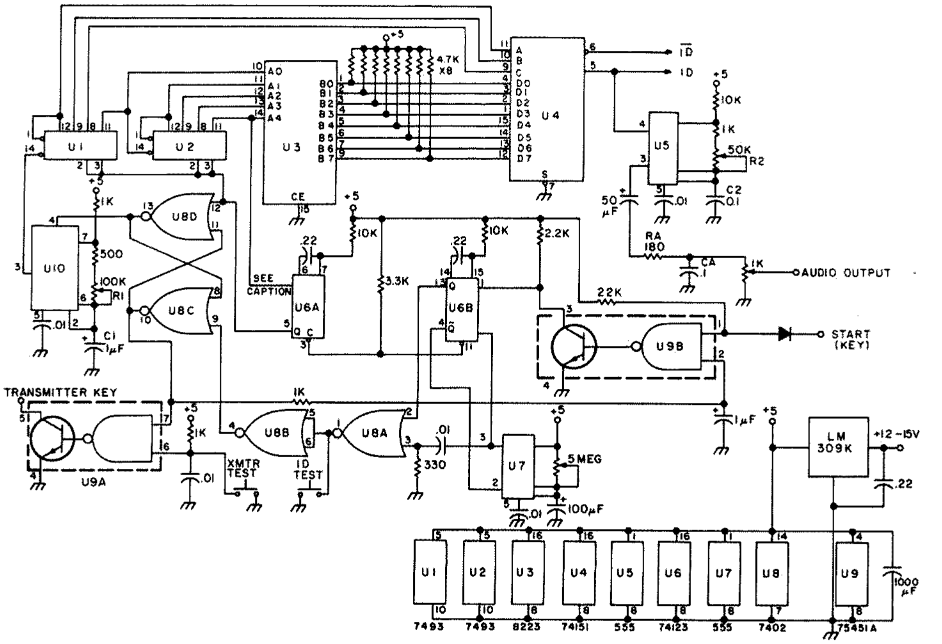

Fig. 1. Circuit of the identifier. For a 128 bit ID, connect U2, pin 11 to U6A, pin 10, and U6A, pin 9 to ground. For a 256 bit ID, connect U2, pin 11 to U6A, pin 9, and U6A, pin 10 to +5. R1C1 set the clock frequency and therefore the speed of the identifier. R2C2 set the tone of the audio output. Note IC numbers at bottom of figure.

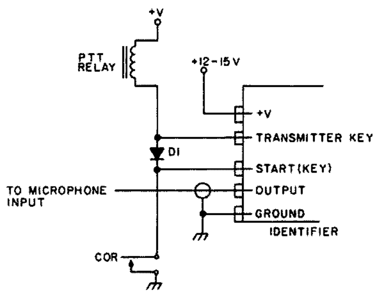

Fig. 2. Typical repeater interconnect with the identifier. The COR is in the receiver or terminal and the PTT relay is usually part of the transmitter power supply. Diode D1 must carry the current of the PTT relay.

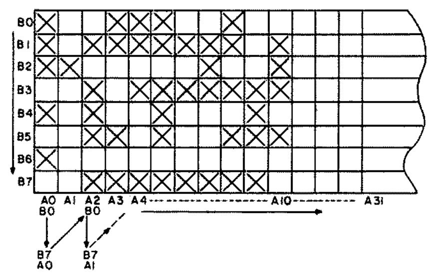

Fig. 3. This shows how the memory is programmed for "DE WR7ABC." An "X" indicates a programmed "1" and an open block indicates a "0". The memory is read from B0 to B7 and from A0 to A31, as shown by the arrows.

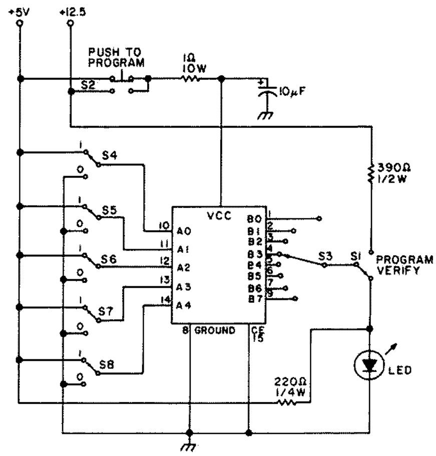

Fig. 4. A simple connection for programming an 8223 memory. The word address is selected by S4-S8. Each bit where a "1" is required is selected sequentially by S3. S2 is a push-button depressed momentarily after S1 is set to "Program."

the identifier re-keying itself and then identifying either continuously or once every three minutes. I wound up isolating the COR/PTT circuits with a diode, and using the second half of U11 as an input gate. This seems to work alright and not re-trigger.

Like all TTL circuits, this one is somewhat rf sensitive. As a result of this problem, I have built the last two of these identifiers in aluminum boxes and brought the connections out through feed-throughs. This appears to solve the rf susceptibility problem.

I am using the logic output of U4 to key an NE555 audio oscillator, which is in turn sent to the microphone input of the transmitter through RA and CA, which roll off the audio above 3 kHz. The logic out of U4 could be used to CW key a transmitter through a relay or transistor if desired.

Operation

A typical interconnect is shown in Fig. 2. Diode D1 alows the output keying to ground the transmitter PTT line without grounding the identifier input.

I have one of these installed on a Motorola repeater with solid state control logic. On that repeater, I use the "Repeater PTT" line to key the identifier and I use the identifier output to key the "Local PTT" line. In this application the diode is not required, since the

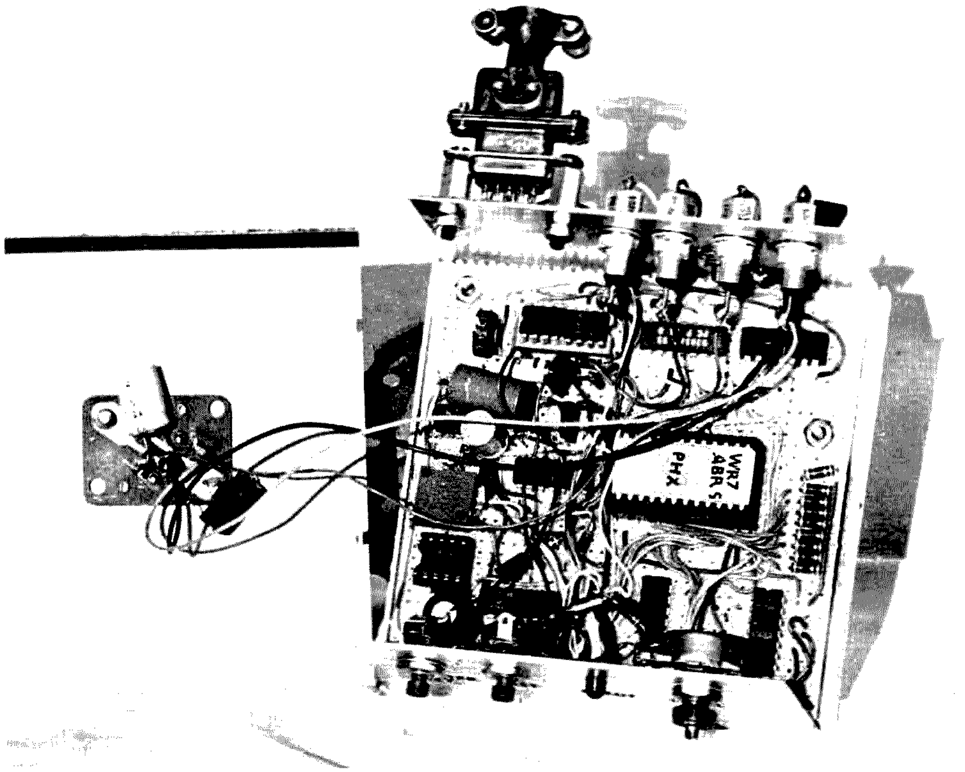

Inside of the identifier. The construction is on perforated board with stick-on solder pads on the underside. This is a prototype unit and the large IC in the center is the PROM used instead of the 8223 shown on the schematic. On the rear of the chassis are filters to provide rf shielding of the leads. The plug on the left was an afterthought added to provide flexibility of connection. (In case you are wondering about the WR7ABR S PHX on the PROM . . . it is a 512 bit memory and has both ABR and ABS messages in it.) The wires and socket inside the top of the case are for the five volt regulator (LM309K).

"Repeater" and "Local" PTT lines are isolated.

Programming

I have suggested use of the 8223 type PROM because it is about the right size for a repeater ID, it is relatively inexpensive, and it is fairly easy to program. I used some larger (512 bit) memories for the units I built since they were available, but over half the memory is unused.

Setting up the program is straightforward. Fig. 3 shows "DE WR7ABC" programmed. The bits are used as follows: dot – 1 bit; dash – 3 bits, intercharacter spacing – 1 space; interletter spacing – 3 spaces; and word spacing – 6 spaces (a bit is a one, a space is a zero). A simple programming jig is shown in Fig. 4. This arrangement, although simple, is tedious because each binary address must be set in manually bit by bit (5 toggle switches). I have built a couple of programming rigs, and I suggest that the first step in sophistication be a thumbwheel address switch, preferably octal (as BCD to binary conversion is complicated). I have a jig for the 74186 type 512 bit memories, and used two BCD coded switches. I only use 0-7 on each and then do all my address setting in octal.

I must warn you, based on many wasted devices, that once you have set a particular bit in a PROM to a "1" it cannot be changed. The moral of this is that you must double-check your program and then do the programming slowly and very carefully.

Conclusion

This circuit has a lot of room for modification or change. For instance, the hold-off timer or re-trigger capability could be left out, or the time changed. The output of U4 is a TTL signal which, if used to turn on a transistor or relay, could directly CW key a transmitter. In my IDers I used 512 bit memories, and in one of them I have the capability of a TTL input which can change messages by switching halves of the memory.

As I mentioned, I can program the 54/74186 or MCM5003 type devices and will be glad to help people with information on programming. Please, however, if you request information, send an SASE. ■

John Skubick K8ANG
1040 Meadowbrook
Warren OH 44484

The Amazing Inverted L

-- antenna for 20, 40 and 80m

Are you looking for an antenna that will outperform the usual horizontal dipole or trap vertical? How about an antenna that "works" just as well day or night on 80, 75 and 40, whether it's long or short skip conditions prevailing at the moment? Does the thought of a tendency to minimize signal fading (QSB) strike your fancy?

As illustrated, this antenna system requires a transmatch. Well, there go about half of the readers scrambling off to the next article. Those remaining might want to try something that is out of the ordinary, and certainly better than some of the simple coax-fed types.

If you examine Fig. 1 closely, you will see why this is called a *system* antenna. It consists of *all* of the ground reflecting screen wires *and* radials, as well as the simple antenna radiating element. All of this is what gives it the above average characteristics in overall signal strength.

Some Theory

Ideas for this system were heavily borrowed from articles in *73*, *QST* and *CQ* magazines (see references). The inverted-L is somewhat noted for a bit of diversity action. I enhanced this by extended (at least for 40 and 20) radials for the vertically polarized field, and a ground "screen," parallel to the flattop, for the horizontal field. This seemed to stabilize the overall response regardless of seasonal weather changes upon the earth in the immediate vicinity.

There seem to be several factors concerning signal fading. Some of these are changes in the skywave angle for transmitting and reception, as well as polarization shifts. This antenna has vertical and horizontal polarization, as well as high, medium and low radiation angles. At first one might think that "spraying" the rf in many directions of angles and polarizations will reduce the field strength in any one plane. However, *on-the-air results* dispel this notion. Instead, the opposite seems to be true over skip paths, with a *higher* average of signal strength as compared to ordinary dipoles and verticals, trapped or untrapped.

For 20 meters, the end-fed flattop will have several lobes at the medium radiation angles. The vertical section has a very low angle omnidirectional pattern. On 80 (75) and 40 meters, the flattop contributes to the high angles necessary for daytime use. The ground screen underneath it seems to give it short skip gain on 80 (75) and 40. A "barefoot" transceiver at 130 Watts average input on SSB usually sounds stronger than "normal," for example. The vertical section, along with the radials, takes care of the low angles for DX at night.

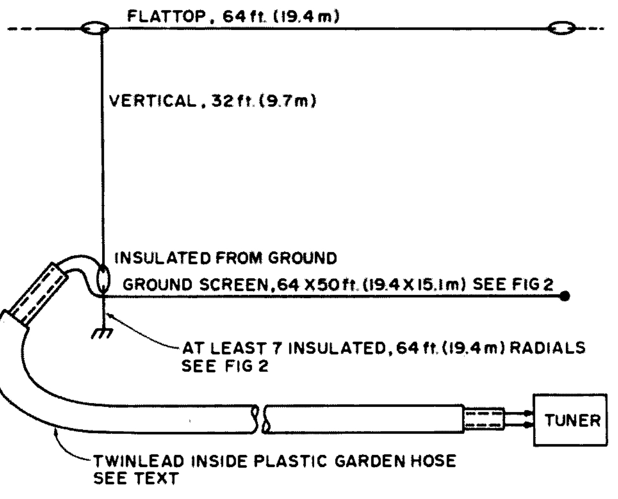

Fig. 1. Inverted-L system antenna for 80, 40 and 20, side view.

Details

When it comes time to put in the grounding system, don't conjure up frightening ideas of deep long trenches tearing up your dandelions. In fact, a deeply entrenched ground system will not work as well for this antenna as one that is above, on, or just below the earth's surface! My first ground system was simply lying on the snow-covered yard (and part of the neighbors' backyards). The antenna worked fine. When soggy spring season rolled around, I then took a large hunting knife and slit the spongy earth alongside the grounding wires and pushed them in about one inch. Now some of the radials were running just underneath my neighbors' well-manicured lawns!

One important item should be noted: *All of the grounding wires must be fully insulated, including the soldered joints.* Use a plastic type of insulated wire such as bell wire or hookup wire. The wire size is not too important. I used #20 solid insu-

lated hookup wire from Radio Shack. Electrical tape can be used to insulate the soldered joints and ends of the wires.

Don't skimp on the radials. Laying them at night under a full moon into a reluctant neighbor's turf can be exciting. If your own property cannot accommodate fully stretched-out radials, and that German shepherd next door is uncooperative, then at least lay them zigzag on your own lot as best you can. Don't shorten or reduce the number of radials.

The radiating element is #12 hard drawn copper enameled "antenna" wire. I suppose #14 will work just as well. I happen to like #12 for increased strength and possibly lower losses. The flattop section was suspended between two maple trees. The "free" end was stabilized with a rope and pulley affair hooked to the tree, using an old rock-filled paint can as a weight. My flattop was oriented east and west.

Transmission Line

Here is the part that looks questionable, but it seems to work. The whole thing is fed with 300 Ohm "balanced" line. I used the oval foam core type of UHF TV line. This handled my rig's 100 Watts output. For high power, I recommend the 300 Ohm transmitting twinlead. My feed line was run through a cheap discount store ¾ inch plastic hose, buried about 3 inches. I split the ground with a garden spade, and wiggled it back and forth a couple of times to spread the earth after each "stab." Yes, it's a bit tedious. When the feed line equipped hose was buried, I then stomped on the trench over the entire length, and after a couple of rain showers, it became invisible.

Be sure that *both* ends of the hose are well sealed. I used tape, and then smeared G. E. Silicone Seal over this. It has been my experience to find that "breather" holes are prone to suck in water. So seal both ends of the hose well, and don't worry about so-called "condensation." If you are using the air-core type of twinlead, then seal up both of these ends also.

Perhaps the 300 Ohm *openwire* (half inch) TV "ladderline" may also fit inside a large diameter hose. Its own insulators may help to keep it "centered" within. I have not tried this, but it's an idea that should have good power handling capabilities. The hose is used only for the underground portion of the transmission line, to help keep it dry and physically separated from ground.

I used both a balanced and an unbalanced type of tuner. Either one gave the same field strength readings at about one city block distance. Both of mine were able to load the system easily. Should you encounter a loading problem on one of the bands, try cutting or lengthening the feeder a couple of feet or so. Chances are you will still load up all right on the other bands.

If you are going to use an *unbalanced* type of tuner, make sure that the "hot" lead goes to the "antenna" side of the line, and the grounded part of the tuner goes to the "ground" side of the line. That may have been stating the obvious, but it is easy to get these feeder leads reversed to an unbalanced coupler. Yours truly did it, and the effect is sneaky. Reception seems fine at first; however, your transmitted signal is very weak!

Conclusion

This antenna system does not completely eliminate QSB, but if you compare it by switching it between an ordinary dipole and vertical (including the trap varieties), you will hear the differences.

One more thing. A "different" type of antenna makes a good conversation topic — especially if your signal is above normal for that particular time of day! ■

References

A Super-Gain Antenna for 40 Meters, Dusina W4NVK, *73,* Oct. 1969, pp. 8-11.

Technical Correspondence, *Antenna Type vs. Distance,* Hardacker W6IT, *QST,* Oct. 1968, p. 43.

Vertical Antennas, Part XI, Lee W3JM, *CQ,* April 1969, pp. 38-43.

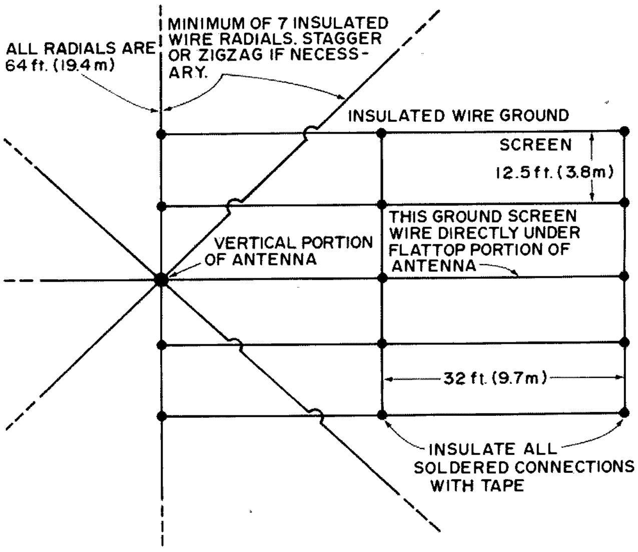

Fig. 2. Inverted-L ground system, top view.

Hank Olson W6GXN
PO Box 339
Menlo Park CA 94025

Battery Chargers Exposed

-- more than you probably wanted to know

A battery charger is one of the most common dc power supplies in use by the general public today. Chargers are available from Wards or Sears catalogs for charging auto batteries at charge rates from several Amps to over 100 Amps. Also in common usage are the small battery chargers designed to recharge a variety of cordless appliances, from toothbrushes to electric carving knives. These smaller chargers are usually designed to charge tiny nickel-cadmium (nicad) batteries

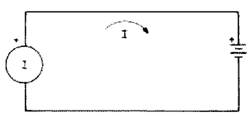

Fig. 1. Basic charger using constant-current generator.

that are more or less permanently built into the appliances. More recently, the nicad battery has been supplemented by another "sealed" type of rechargeable battery: the "gelled-electrolyte" lead-acid battery. "Gell-Cell" is Globe-Union's trademark for such a battery. The gelled-electrolyte lead-acid batteries are generally of larger physical size and weight than nicads, and are used in portable transceivers,

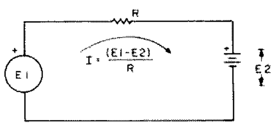

Fig. 2. Approximation of constant-current charging using constant-voltage generator and series resistor (R).

standby lighting systems, intrusion alarm systems, and similar applications.

There are differences among chargers for use with conventional lead-acid batteries (such as used in autos), and still other differences among the small chargers designed for the "maintenance-free" batteries. We will look at a variety of chargers, to see what they basically do, and to see how they differ.

The main function of *any* battery charger is to cause *current* to flow back into a battery in the opposite direction from which current flowed during discharge. Batteries, when used properly, are relatively constant-voltage devices, so the

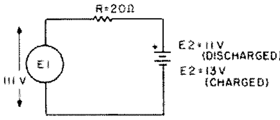

Fig. 3(a). With E_2 discharged, $I = (111-11)/20 = 5$ A; with E_2 charged, $I = (111-13)/20 = 4.9$ A.

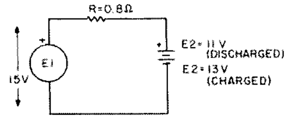

Fig. 3(b). With E_2 discharged, $I = (15-11)/0.8 = 5$ A; with E_2 charged, $I = (15-13)/0.8 = 2.5$ A.

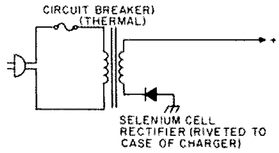

Fig. 4. Typical inexpensive commercial battery charger.

most meaningful measurements in battery charging are made in *Amperes.* The current for charging can come from a number of sources; the commonest source, today, is a low voltage secondary transformer and solid state rectifier. In years past, motor generators, and low voltage transformers with older types of rectifiers, were extensively used as chargers. The principle was always the same: Force *current* back into the battery to charge it.

The basic battery charger, shown in Fig. 1, uses a current source. Since current sources are not as common as voltage sources, an approximation to a current source can be made as shown in Fig. 2. By making E_1 *large* compared to E_2 (the battery voltage), essentially constant current will flow during the battery charging cycle, even though E_2 rises slightly as the battery nears full charge. To see quantitatively how this works, let's take the two examples shown in Figs. 3(a) and 3(b). In both cases, we'll assume that the uncharged

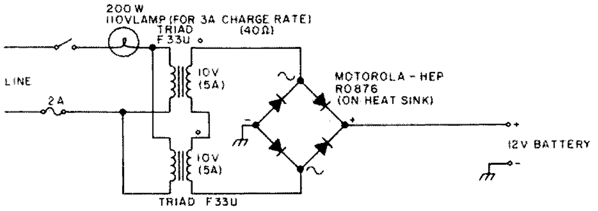

Fig. 5. Simple battery charger with current-limit resistor in transformer primary.

(lead-acid) battery starts with an E_2 of 11 volts, and that E_2 at full charge rises to 13 volts. In Fig. 3(a), the current at the start of charge is 5 Amps and at the end of the charge cycle is 4.9 Amps. That is, the charge rate has only changed 2% during the charging cycle.

In the example in Fig. 3(b), however, current undergoes considerable change during the charge cycle. As in the first example, the charge starts out at 5 Amps, but drops to 2.5 Amps at the end of the cycle. This latter case is typical of most inexpensive battery chargers on the market; the number of Ampere hours put into the battery is difficult to calculate, however. This latter case is a simple form of "tapered charging" and is actually a reasonable approach, especially if you're the type who forgets to turn off the charger. The smaller end-charge current will not electrolyze away as much water from the battery as fast as with constant-current charging (if the charger is left on too long).

Modern commercial battery chargers, available from auto supply stores and mail order catalogs, are generally of the form shown in Fig. 4. Selenium disc rectifiers are still used because they have a rather large forward voltage drop, and so can make it unnecessary to use a dropping resistor. Another trick used in commercial battery chargers is to wind the transformer so as to have a relatively large equivalent secondary leakage inductance, and thus eliminate the need for a current-limiting resistor.

In older types of chargers, copper-oxide-disc and tungar-bulb rectifiers were used; these rectifiers also had considerable forward drop. Older chargers can occasionally be retrieved from the "back of the garage" and returned to use by replacing non-functioning rectifiers with modern silicon rectifiers. However, when doing this replacement, be sure to add some current-limiting resistance to make up for the higher efficiency of the new diodes. The value of resistance can readily be determined by charging a discharged battery, starting with a reasonable guess as to resistance value, and watching the ammeter. One can even add the current-limiting resistance in the primary of the charger transformer, if that's easier.

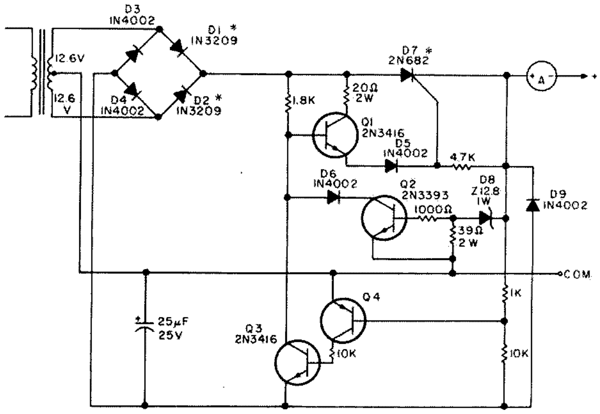

*Fig. 6. Heath GP-21. *All on one heat sink.*

Primary current-limit resistors are, of course, higher in resistance than those in the secondary circuit. A home-made charger using a 200 Watt light bulb as such a primary resistor is shown in Fig. 5.

In recent years, there has been progress in making electronically-controlled chargers that charge conventional lead-acid batteries completely automatically. Such chargers are now commercially available, and you may connect

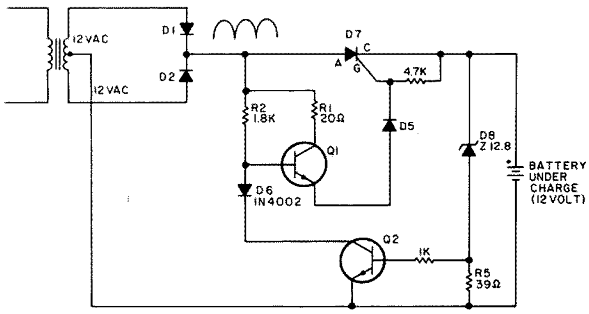

Fig. 7. Simplified circuit of GP-21.

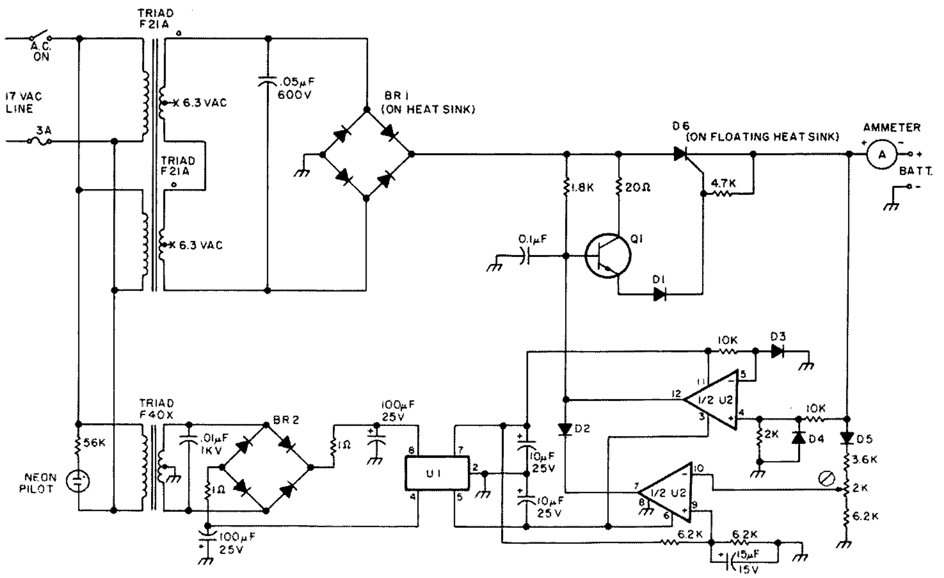

Fig. 8. Battery charger using IC control with adjustable finish voltage. D1-D5: 1N4002 or Motorola HEP-R0051. D6: 2N682 or Motorola HEP-R1471. BR1: 12 Amp integrated bridge, Motorola MDA980-2 or HEP-R0876. BR2: 1 Amp integrated bridge, Varo VE27. Q1: 2N3641 or Motorola HEP-S0015. U1: Raytheon RC4195NB. U2: National LM319D.

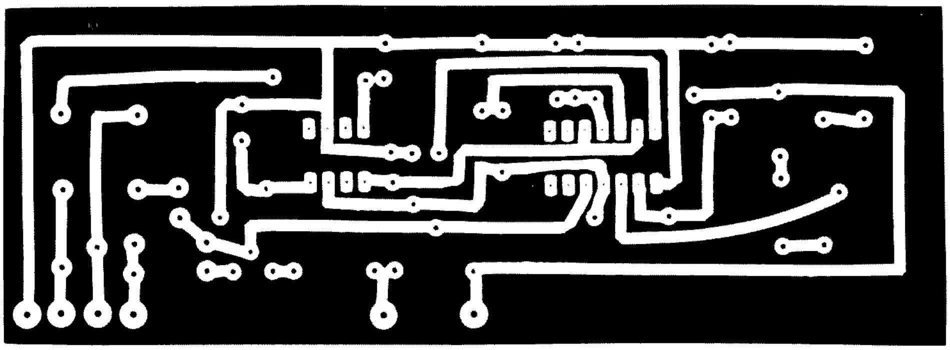

Fig. 9(a). PC layout for charger in Fig. 8.

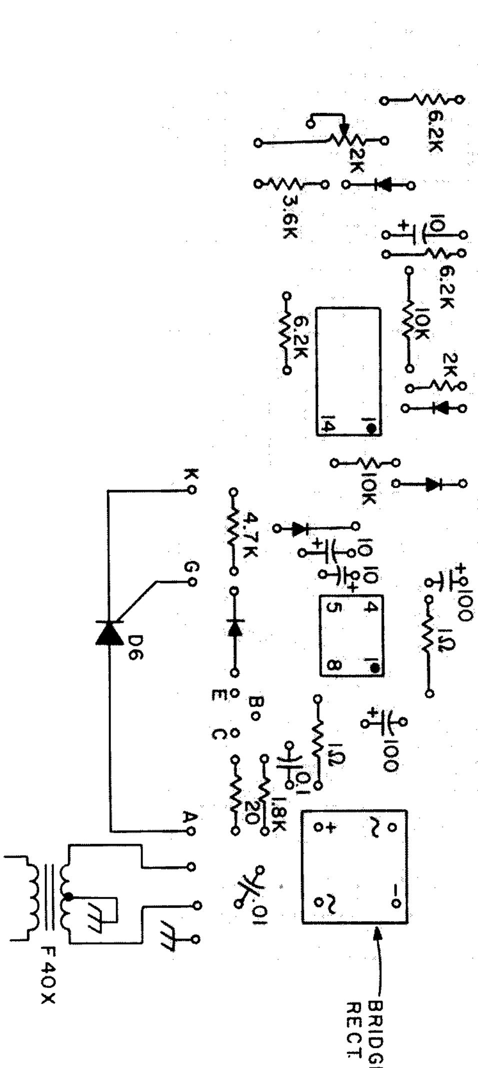

Fig. 9(b). PC parts placement.

your battery to the charger and essentially forget it. Such an automatic charger is the Heathkit GP-21. The GP-21 is not only self-controlling, but is protected against shorting the battery leads together and reversing the battery leads. Either of these two operator errors produces no sparks or opening of breakers, but simply non-operation. The Heathkit GP-21 is shown in Fig. 6. Note that Q3 and Q4 are involved in the lead-shorting and reversal protection; the basic charger can be simplified (for circuit understanding) to that of Fig. 7. Whether the GP-21 charges the battery depends on whether the 12.8 volt zener (D8) conducts; that is, whether the battery terminal voltage is over 12.8 volts. If the battery voltage is below 12.8 volts, the battery needs charge, D8 does *not* conduct, Q2 is "off," and Q1 is allowed to pass full wave rectified 60 Hz via R1 and D5 to the gate of D7. Thus D7 turns on (at 120 Hz rate) to pass current to the battery. If, on the other hand, the battery voltage is above 12.8 volts, D8 conducts, causing Q2 to be "on," which clamps the base of Q1 to ground (via D6) and full wave rectified 60 Hz is *not* passed via R1, Q1, and D5 to the gate of D7. So in this second case (with a "charged" battery, with terminal voltage over 12.8 volts), D7 is prevented from passing additional current to the battery.

The circuit of the Heath GP-21 could probably be duplicated by many home-constructors, but the 12.8 volt zener is a nonstandard value. The cost of parts would almost certainly exceed the Heathkit cost, however. I built an automatic charger that has performance similar to that of the Heath GP-21. This charger was built to use two 6.3 V, 10 Amp, filament transformers as the main current source; such filament transformers are usually pretty common in ham "junk boxes." The feature of the charger shown in Fig. 8 is that an LM319D dual comparator is used to sense "end-of-charge" battery voltage and to provide "reversed charger leads" and "shorted charger leads" protection sensing. In this circuit, the "end-of-charge" voltage is *adjustable* by means of a small 2k trimpot. The LM319D uses a ±15 volt supply which is provided by a Triad F40X, bridge rectifier, and Raytheon RC4195 dual regulator IC. A fraction of the +15 volts regulated voltage (as voltage-divided by the two 6.2k resistors in series) is used as the voltage reference against which the lower comparator compares a fixed fraction of the battery voltage. The function of the upper comparator is to sense a "reversed leads" or "shorted leads" condition. In order to facilitate construction of this charger, the control circuitry has been laid out on a PC board, shown in Fig. 9. The larger components, and those on the heat sink, are mounted off the PC board.

The nicad battery was one of the first "maintenance-free" rechargeable batteries introduced in the U.S. It is quite different from the lead-acid battery, in that the electrolyte is a strong base (potassium hydroxide or sodium hydroxide) instead of an acid. The plates are made of nickel hydroxide (positive) and cadmium (negative). Although nicads can be made with conventional filler caps, so that they may be maintained like auto batteries, most of the small ones are of the "sealed" type. These "sealed" nicad batteries are the ones most used in hand-held transceivers and small appliances. The electrolyte in such batteries is held in a separator between the positive and negative plates, which is also gas-permeable. The gas-permeable separator

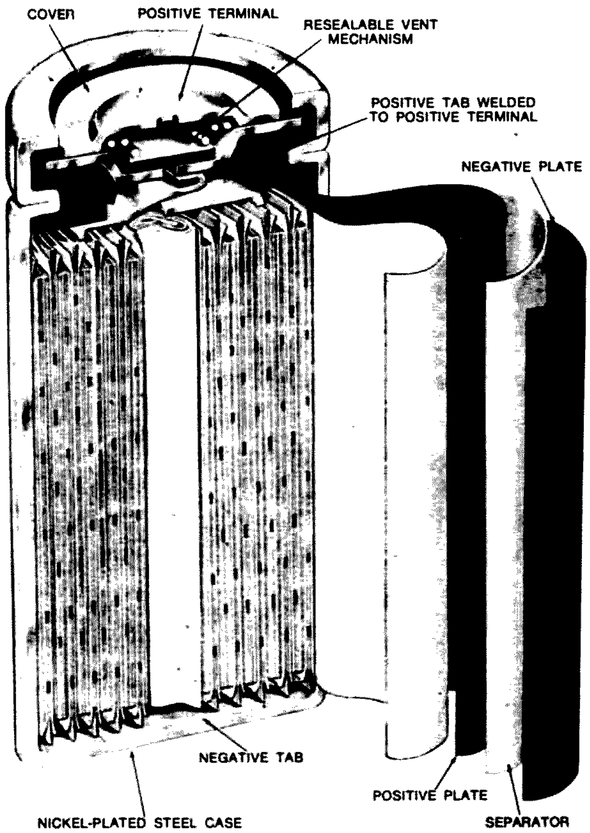

Fig. 10(a). General Electric nicad cell structure.

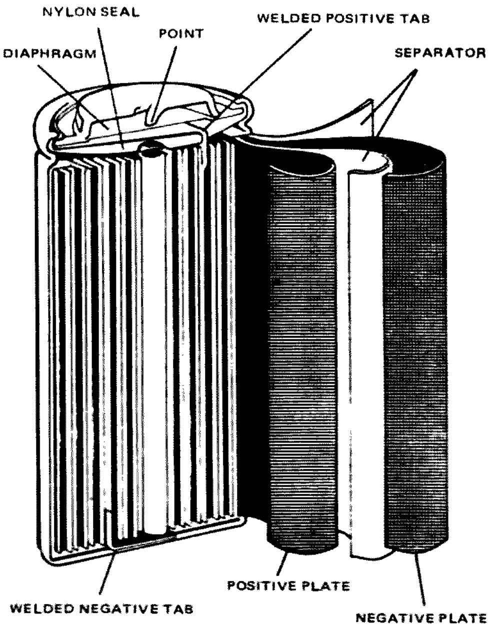

Fig. 10(b). Sonotone nicad cell structure.

absorbs oxygen which the battery liberates when it is over-charged. Almost all "sealed" nicad cells have a safety release value, however, so that in extreme overcharge conditions they won't explode. Some of these valves are of the resealing type and some are not. Fig. 10 shows the overpressure vents of the Sonotone and G.E. units. The point here is that even "sealed" nicads may vent gasses, if severely mistreated.

The "sealed" nicad is generally charged with a constant-current type of charger, with the addition of a voltage limit across the battery. This sort of charger can be relatively simple, as several construction articles in the amateur literature have shown.[2,3] In Fig. 11, three approaches to the constant-current, limited-finish-voltage charging method are shown. The first method relies on the nonlinearity of light bulbs to approximate constant current (the resistance of a light bulb decreases with decreasing voltage across it). The light bulb charger, Fig. 11(a), is similar to one shown in reference 2. Fig. 11(b) shows the FET approach of reference 3; the FET has an inherent constant-current characteristic which is utilized in this charger. The large number of FETs is required because it is desired to utilize the inexpensive plastic types. Since the nominal I_{dss} of the HEP-802 or F 0015 FETs is nominally 2 to 20 mA, some "picking and choosing" must be done. Units with I_{dss} of 8 to 15 mA will be considered usable in this circuit. The sum of I_{dss} for units Q1 and Q2 will be 15 mA, and the sum of I_{dss} for units Q3 through Q6 will be 35 mA. A switch is used to connect Q3 through Q6 for a total current of 50 mA during "charge"; when this switch is opened, the current drops to 15 mA for "float" or "trickle" charge. The zener diode D1 limits the "finish" voltage, as in Fig. 11(a).

The charger in Fig. 11(d) produces constant current by means of a simple transistor circuit, in which the current is adjustable by the user by means of R_1. The "charge-float" switch is closed during "charge" to raise the value of constant current. As in the chargers of Figs. 11(a) and 11(b), a zener diode is used to limit the "finish" voltage.

All of the chargers in Fig. 11 were intended to be used with a ten-cell pack of nominal 12.5 volts, as used in many transceivers. The individual cells in such a pack are of the AA size (penlite) and have about 400 mAh (milliamp-hour) capacity. The Sonotone S-101 or General Electric XGCF450ST are representative units of this type cell. As a general rule one charges at a rate that is 1/10 the mAh rating of the cell or battery. That is, for a 400 mAh battery, we should charge at a rate of about 40 mA. Such a charge rate would appear to fully charge a 400 mAh battery in 10 hours, but usually nicad batteries are overcharged at least 25%, as recommended by the manufacturer. No damage is supposed to occur if longer overcharging occurs, but most battery manufacturers recommend a much lower "float" or "trickle" rate after the battery has been overcharged about 150%. It is possible to use higher charge rates with nicads, especially if special types are used, and accurate timing is made certain. For example, in an AA cell, General Electric offers the XKCF450ST, which will take a 150 mA overcharge rate (more than 3 times normal). In any case, the recommended rates of the manufacturer should be consulted before any rapid charge mode is tried.

Although it has only indirect connection with nicad battery charging, the discharge cycle is also quite important, too. In series groups of nicad cells, the individual cells do not always hold equal charge, and the one which discharges first may be run down into "cell reversal." This is considered bad form, and can destroy the reversed cell. One way to help avoid cell reversal is to make sure that the system powered by the nicad battery stops its drain when the battery voltage drops to 1 volt per cell. That is, for our 12.5 volt pack, operation

would be stopped at 10 volts, and a charging cycle started. A more detailed article on nicad batteries is presented in reference 4, for those interested in all the tricks.

The lead-acid, gelled-electrolyte battery has been introduced more recently, and is designed to be a lower cost "maintenance-free" unit. The gelled-electrolyte battery is similar to a standard lead-acid battery in per-cell-voltage and in the chemical reactions inside it. The electrolyte is held in a gell, however, so the battery may be used in any position, and there are no filler caps. The gelled electrolyte batteries have no "cell reversal" problem nor the "memory effect" characteristic of nicad batteries. They do vent during normal overcharge, and usually have resealing vent valves for this reason. This venting causes a loss of the water in the gelled electrolyte, which cannot be replaced, so the cells do have a limited life, depending on how much overcharge is used. The recommended method of charging one such gelled-electrolyte battery, the Elpower "Solid Gell" battery, will serve as an example of how at least one manufacturer feels it should be done. The Elpower EP1230A is a 12 volt, 3 Amp-hour unit and is charged at a maximum current of 0.45 Amps until a battery voltage of 14 volts is reached. The voltage is then held constant at 14 volts until the charge current drops to 0.040 Amps. At this point the charger is disconnected or switched to "float." The "float" mode keeps 2.2 volts per cell across the battery, or 13.2 volts for the EP1230A.

The charger in Fig. 12 is designed to charge a 12 volt, 3 Ah gelled-electrolyte battery, such as the Elpower EP1230A. It is essentially a constant-voltage regulator with current-limiting as designed around a National LM305H, with the usual PNP-NPN pair to increase current capability. The constant output voltage is adjusted by means of the 5k trimpot and the current limit is controlled by the value of the 0.68 Ω resistor. This 0.68 Ω resistor is actually a 1 Ω and a 2.2 Ω half-Watt resistor in parallel. All the circuitry above the dotted line is added to the standard regulator to accomplish the special gelled-electrolyte charging requirement. This added circuitry consists of 1N4454, LED, LM311H voltage comparator, 2N4302, FCD810 optocoupler, six resistors, and two pots.

The way that the charger circuit works is as follows. When you connect a discharged battery across the output, the battery will tend to draw unlimited current, since the supply has constant voltage output, and the battery voltage is (presumably) lower. The current-limiting function of the LM305H immediately comes into effect, however, and only 0.45 Amps is passed, so the output voltage drops to that of the battery. As the battery charges (at the constant-current rate of 0.45 Amps), its terminal voltage rises slowly to 14 volts, but cannot rise above this voltage because of the *voltage* regulating action of LM305H circuit. So when the battery voltage gets up to 14 volts, the charging current starts to diminish. During the initial constant-current and constant-voltage phases of charge, the voltage at point "A" is higher than that at point "B," both with reference to point "C." The voltage "BC" is constant because of the regulator formed by the 2N4302 and 1N4454. As charging current through the 0.68 Ω resistor drops, the voltage "AC" drops until it is no longer more positive than voltage "BC." At this point the LM311H output changes from "high" to "low," which turns on the LED *and* the LED inside the optocoupler, FCD810. This in turn causes the optotransistor in the FCD810 to saturate, and connects the 10k and 250k pot across the LM305H sensor-divider. The constant-voltage output of the LM305H regulator is thereby dropped from +14 to +13.2 volts.

Since there are several adjustments on the charger, the setup is somewhat complicated. First, pull the FCD810 out of its socket, and with a voltmeter across the charger output (no battery, yet), adjust the 5k trimpot for +14 volts output. Then add a 350 Ω, 25 W rheostat across the terminals and decrease resistance until regulation is lost (as indicated by a drop in output voltage as read on the voltmeter). This point should correspond to 0.45 Amps on the ammeter; if it does not, the size of the 0.68 Ω current-sense resistor should be adjusted. The FCD810 should now be restored to its socket and the 350 Ω rheostat increased in resistance until the red LED lights. This should correspond to about 40 mA on the ammeter; if not, the 500 Ω trimpot should be adjusted until the proper trip point is achieved. Since the LM311H has deliberately had hysteresis added to its circuit (the 3.3 meg resistor), it will be necessary to adjust the 350 Ω load down in resistance considerably until the circuit untrips, as indicated by the LED going out. The 350 Ω rheostat is then decreased in resistance to find the new trip point, and so on.

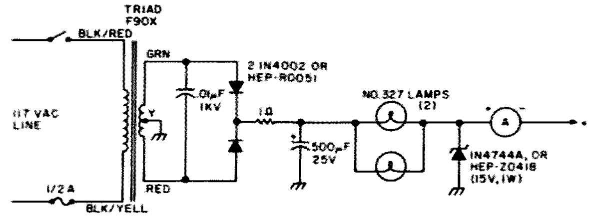

Fig. 11(a).

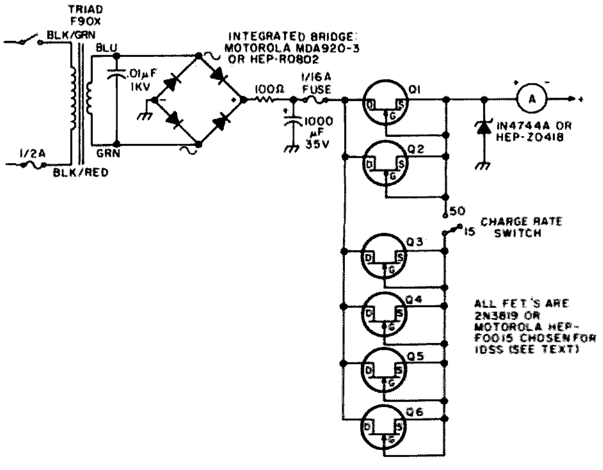

Fig. 11(b).

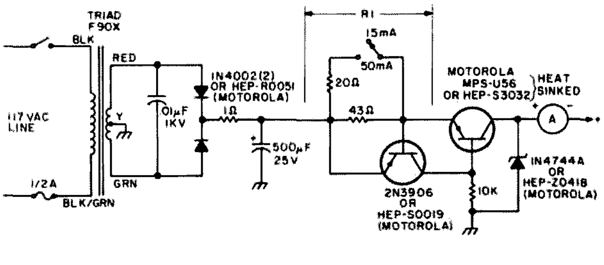

Fig. 11(c).

After a satisfactory trip point of about 40 mA is found, the float voltage may be set to approximately 13.2 volts. This is done with the 250k trimpot.

Finally, there is one awkward condition that may occur when charging a partially discharged battery. If the discharged battery does not draw enough current from the charger to "untrip" the LM311H, the output voltage will stay at +13.2 volts. This will not do much charging of the battery. A push-button switch and 50 Ω, 5 Watt load are provided to "untrip" the circuit and move the charger to +14 volt output state. The red LED indicator is "on" when the charger is in the +13.2 volt state and "off" when the charger is in the +14 volt state.

In this article we've attempted to cover the several common rechargeable batteries and their chargers. Specific charger circuits, both conventional and automatic, have been shown. Hopefully, enough details of circuit operation have been given to enable the astute experimenter to redesign the circuits for the particular battery he needs to charge. The references appropriate to each charger should be consulted, of course, to glean additional details when modifying these circuits. In addition, it cannot be emphasized too greatly that the manufacturer's recommendations on a particular battery should be followed regarding both charge and discharge cycles! ■

References

[1] Tektronix, "Nickel-Cadmium Review," *Tektronix TEKscope,* August 1969, pp. 8-11, Vol. 1, No. 4.

[2] Shriner, R., "Charging Nickel-Cadmium Walkie-Talkie Batteries," *QST*, August 1973, p. 44.

[3] Shubert, G., "FET-Controlled Charger for Small Nicad Batteries," *Ham Radio,* August 1975, p. 46.

[4] Stark, P., "How to Make Nicads Behave," *73*, December 1974, p. 24.

[5] Globe, "Gell-Cell Charging Manual," 41-2128, Globe Battery Division, Globe-Union, Inc., 5757 North Green Bay Avenue, Milwaukee WI 53201.

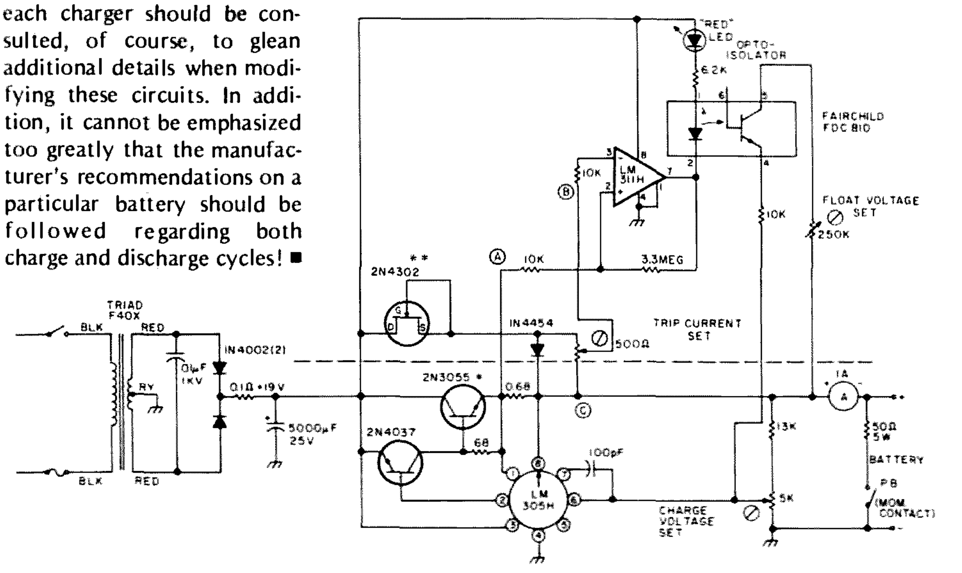

*Fig. 12. *Heat sink to chassis with mica washer and silicone grease. **Choose 2N4302 for I_{dss} = 1 or 2 mA.*

Alexander MacLean WA2SUT, NNN0ZVB
18 Indian Spring Trail
Denville NJ 07834

How Do You Use ICs?

-- part III

The ICs (Integrated Circuits) used in frequency dividing circuits are one group of ICs that can restore your faith in the IC dream. While many of them were not primarily designed for just that purpose, they find wide application in many IC projects.

They are probably the easiest circuits to hook up and use, and in the applications to be shown, require no external parts. While there are several which are commonly known and used, there is one in particular that stands out as perhaps the most frequently used: the 7490 Decade Counter.

The 7490 is used two ways in a frequency counter. One section of the counter uses it as part of the actual counting circuit, where it connects with the driver that runs the numerical readout. Using a slightly different hookup of the same device, it is used in the timing chain to divide the basic "clock" or oscillator frequency to the desired time.

This is the hookup to be discussed here. It is so commonly used for all clock, timing or frequency dividing circuits that once it is learned, whole sections of equipment will fall into place.

Depending on how it is hooked up, the 7490 will divide the input frequency to it by two, five or ten. It will do this with any frequency up to the device's frequency limit, about 20 MHz for the 7490, and higher for the high speed versions of the 7490.

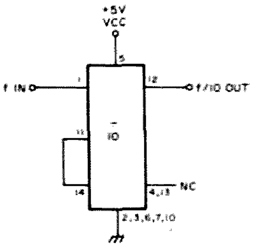

Fig. 1. 7490.

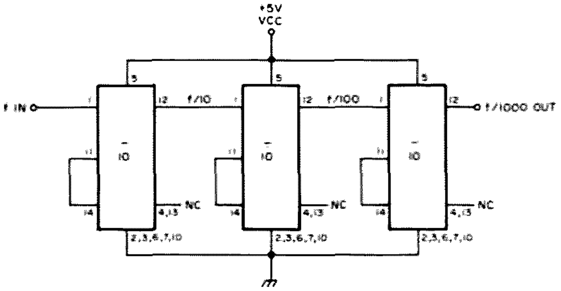

Fig. 2. 7490.

It is remarkably uncritical to use. The only basic requirement for it, and the other divider ICs, is to feed it a square wave. If you feed it with a 7400 oscillator or something similar, this will be taken care of automatically.

If you are using a sine wave source, you will have to run it through a clipping circuit. The IC oscillator feed is the more common by far. The signal is usually fed from one section of the 7400 used as a buffer stage between the oscillator and the divider, but this is not always done.

Once the basic patterns of hooking up the 7490 as a frequency divider are learned, you will have them, and it is just a question of applying them to your use.

Fig. 1 shows the divide by ten circuit. Simple, isn't it? All you do is ground pins 2, 3, 6, 7 and 10, connect pin 11 to pin 14, feed the input signal to pin 1, and take the output from pin 12.

As Fig. 2[1] shows, adding stages is just a matter of repeating the same thing, with the output of one stage going to the input of the next.

While not always used, it is not uncommon that there will be a bypass capacitor connected between the Vcc pin and ground with this and the other divider ICs. One is used for each IC in the chain. The value is usually 0.01 to 0.1 uF.

To get divide by two and divide by five, it helps to understand how divide by ten is arrived at. The 7490 actually starts off by dividing by five and two, the two being combined to get divide by ten.

Pin one is the divide by five input. The output is at pin eleven. The divide by two input is at pin fourteen and the output at pin twelve. For divide by ten, the divide by five output is connected to the divide by two input.

Without this connection between pins eleven and fourteen, the two sections are available for separate use. An

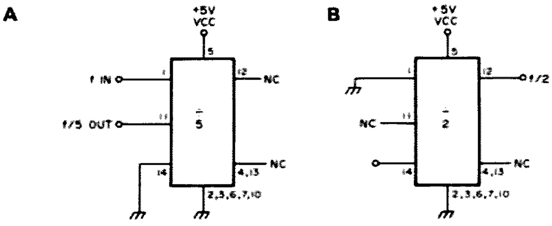

Fig. 3. 7490.

input to pin one will yield divide by five output at pin eleven. An input at pin fourteen will yield divide by two output at pin twelve.

If both outputs are desired, both inputs can be connected to the frequency source and the two outputs will be available at their respective output pins.

Examples of these hookups are shown in Fig. 3, A and B, and Fig. 4. That is all there is to it. Then it is just a question of deciding what frequency divisions you want, block diagramming it and assembling the needed ICs.

Switching is not critical, and it is easy to get a wide variety of combinations that will serve many purposes. Some forms of these hookups are the backbone of the various counter and clock timing circuits. Learn them and a whole section of the more complex equipment is yours.

Besides frequency counter use, this same type of circuit is used for a frequency calibrator (secondary frequency standard) for receivers and transmitters.

The output from an IC buffer stage is usually connected to the receiver. A switching arrangement provides a choice of available output frequencies, such as 1 MHz, 100 kHz, 10 kHz, 5 kHz, 2 kHz and 1 kHz.

For counter use, it is the final output signal gating the counter part of the circuit which determines what the frequency range is that is actually counted: MHz, kHz, Hz or whatever degree is desired.

Considering that the 7490s can be bought for as low as about 50¢ each, the temptation is to build a counter to read your frequency to maybe a few thousandths of a cycle – maybe even better if you get a good deal on the readouts.

Unfortunately, it just doesn't work that way. There is a law of diminishing returns that gets in the way. In this case, it is a matter of time.

Starting with a 1 MHz crystal, you have a signal of 0.000001 second per cycle. Six 7490s will give you a one cycle per second pulse.

If, for example, you wanted to read an audio signal to better than one cycle per second, you would have to have a slower timing pulse. This is easy to do by adding another divide by ten stage, but this is where the trouble starts.

One more stage makes a pulse that is ten seconds in length. Two stages would be needed to read an audio signal to within hundredths of a cycle per second.

This means one cycle per hundred seconds pulse. That works out to one minute and 40 seconds. Add two more decimal places and you will wait 1000 seconds which is over sixteen minutes.

Even if your counter had timing pulses of that duration, over a period of that long, a high frequency oscillator is going to have some drift. It will be in cycles or tens of cycles per second.

Even if your counter could read the actual frequencies, past a certain percentage of the frequency the readout would be a blur because the actual frequency would be instantaneously changing.

In practice, quite a bit before you reach this problem, you will run into the actual accuracy of the crystal used in the timing chain.

There is a limit to the overall accuracy to which you will be able to set and maintain the calibration of your oscillator, which is the overall determining factor in how accurate your counter will be.[2]

If the tolerance of your crystal is such that the best accuracy you can expect at two meters is within a few hundred cycles, it will add nothing to be able to read within cycles per second.

With the simpler circuits, you may have an actual accuracy to within a kHz or so at those frequencies, so the additional digits of readout may show you down to cycles per second and your answer may be off by kHz.

While you can read your transmitter frequency to within a very close tolerance (up to 30 MHz or so), there comes a point where a usable reading ceases to exist. For normal use, most inexpensive counters will put you within 100 cycles and may even get within ten.

Beyond that it begins to become impractical to get a figure that is usable with simple equipment. Of course, with audio frequencies you may be able to go down to parts of a cycle, but still there

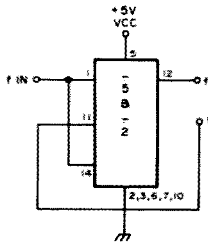

Fig. 4. 7490.

comes a point beyond which there is no usable advantage.

While the 7490 is the most commonly used divider IC, there are others common enough to warrant knowing about.

The 7493 Four Bit Binary Counter will give divisions by two, four, eight and sixteen when it is connected as a frequency divider.

The technical data lists two ways of hooking it up. The first, shown in Fig. 5A, is as a four bit binary counter with "A" output (pin 12) connected to "B" input (pin 1). This is shown as giving divisions of 2, 4, 8 and 16 at outputs A (pin 12), B (pin 9), C (pin 8), and D (pin 11) respectively.

The second hookup does not use the A section, but feeds the input directly to the B input as shown in Fig. 5B, getting divisions of 2, 4 and 8 at B, C and D respectively.

While the above information comes from the technical data on the device, Fig. 6[3] shows an actual circuit taken from a piece of equipment.

Here the device has been adapted to provide divide by six operation, which shows you how much respect some people have for what the device is supposed to be able to do.

The next device of interest is the 7492 Divide by Twelve Counter. This also has two

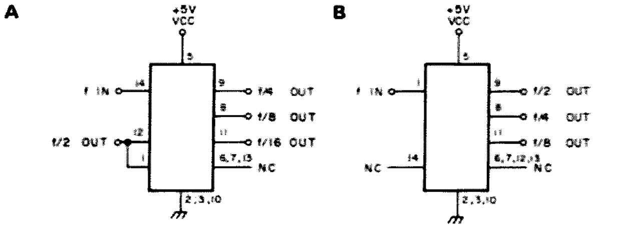

Fig. 5. 7493.

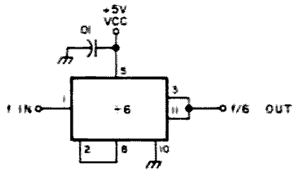

Fig. 6. 7493.

ways of hooking it up for different frequency divisions.

Connected as a divide by twelve counter (Fig. 7A), output A is connected to the BC input, giving divisions by 2, 6 and 12 at A, C and D respectively.

If A output is not connected and the signal is fed directly to the BC input, you get division by three and six at C and D outputs respectively, as shown in Fig. 7B.

These appear to be as easy to hook up and use as the 7490. You just decide which of these divisions you require and work out the device configuration to do it. They hook up like building blocks.

There does not appear to be a consensus about what to do with the unused section of a divider IC when you only need one part of it. This is quite common in practice where you only need one section to get the required division.

In many instances it may be safe to just leave the entire unused section floating, but this might be able to cause a false pulse or other unstable operation.

You can probably tie the unused input to the input of the section you are using and ignore the output from the unwanted section, but the safest method might be to tie the unused input to the Vcc source through a 1000 Ohm resistor.

Some of the circuits show the unused section's input connected to ground, but this may not be safe for all of the devices.

While not usually referred to as frequency dividers, there are flip flop ICs which can perform the same function. They can easily be applied to a circuit to get the required frequency division. Two such circuits are shown for illustration.

The first is the 7473 hooked up to provide divide by four output. In this case, pins two and six are connected together and give a switching feature to control the stage (Fig. 8[4]).

The second, using a 7476 (Fig. 9[5]), is quite straightforward, but there is one unusual feature. Notice that the device is split into two separate rectangles and that inside each are letter designations as well as the pin numbers outside.

For simplicity, most amateur schematics only make use of the pin numbers or sometimes use the computer schematic symbol for easy identification of the device.

Since these are computer circuits, they have a computer terminology not only for the device function, but also for the names of the various connections within.

The letters refer to those names. As they are not really needed for our purposes, they will not be explained. It is unlikely that you will find a schematic where the letters will be given without the pin numbers.

It is still easy to see that the diagram refers to just one device even though it is drawn in two parts.

In the unlikely event that you do find a schematic that just gives the letter names, you will have to refer to the technical data for that particular device.

Somewhere in there should be the full drawing of both sections giving the letter names and the pin numbers for each pin.

These circuits have been shown to gain familiarity with such circuits. As can be seen, they are all very similar in their lack of complexity.

These can actually be thought of as practical building blocks. These, or similar circuits, can usually be lifted bodily from one piece of equipment and used for the same purpose in another.

By keeping a card file of such circuits, you will build a reservoir of them that can be tapped when needed for your own equipment. Just determine what frequency divisions are necessary and pick the circuits needed from your file.

As you run across other devices used for this purpose, you should have no trouble in recognizing the complete circuit and isolating it schematically for your file. ■

References

1 "A Satellite FAX System You Can Build," Taggart, Ralph E., *73*, September 1975, page 39.

2 "How Accurate Is Your Counter — Really?" Bloom, Robert E., *73*, April 1976, page 110.

3,4 "Build This Exciting New TVT," Hutton, Louis E., *73*, March 1976, page 76.

5 "Inexpensive HF-VHF Frequency Standard," Hinkle, F. E., Adams, W. T., *73*, April 1976, page 62.

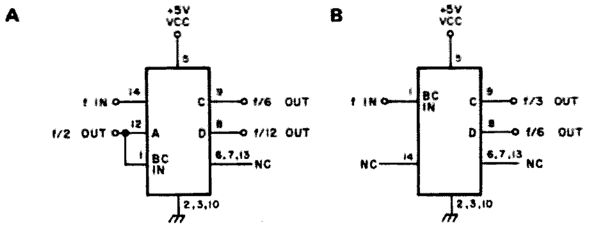

Fig. 7. 7492.

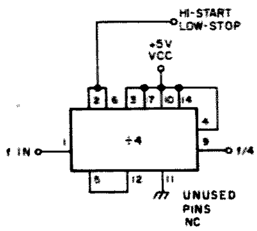

Fig. 8. 7473.

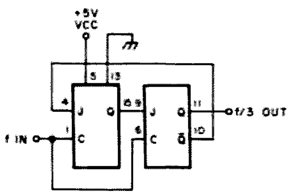

Fig. 9. 7476. Unused pins NC. 16 pin package.

Wayne Green W2NSD/1

Thirty Years of Ham RTTY

-- from the Model 12 to the microprocessor

Amateur radio teletype got its start in 1946 soon after the two meter amateur band was opened.

I remember getting word that 2½ meters was open along in September 1945. I was teaching radio and radar at the submarine base in New London at the time, and it took but minutes for me to dash up to the lab and put a rig on the air and start making ham contacts. The next weekend I drove home to Brooklyn and picked up my homemade battery transceiver . . . built pre-war out of *Radio* magazine. How many of you have seen copies of *Radio*? It was the *class* magazine of the 30's and made us all wonder what was wrong with *QST*.

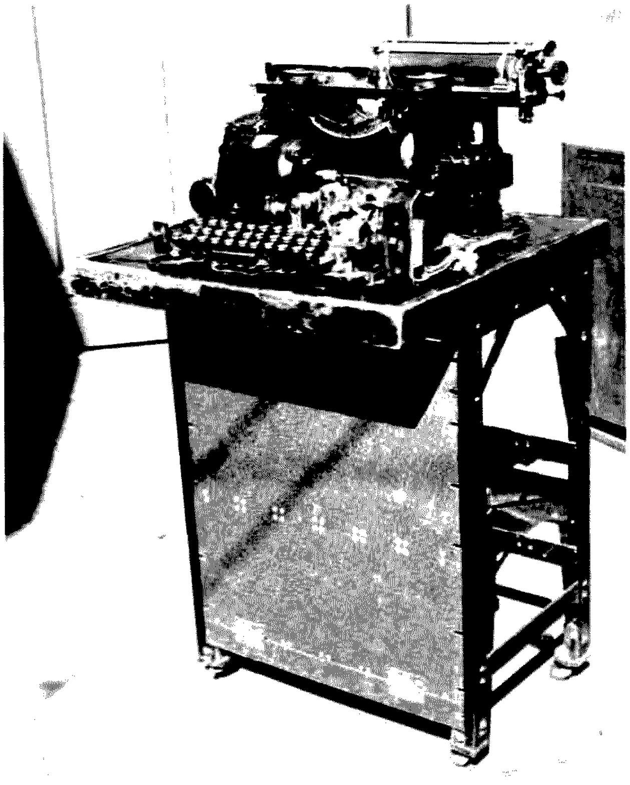

The old Model 12 "warhorse" Teletype machine . . . the printer that got amateur radio teletype started back in 1946.

Ten meters was opened, as I recall, along about late November 1945, and the 2½ meters was changed to 2 meters in December 1945. Within weeks W2BFD was going hot and heavy with his audio frequency shift radio teletype up on 147.96 MHz and slowly gathering a group of interested pioneers.

The equipment in those days was a Model 12 Teletype machine with good strong electromagnets for each of the five pulses of the Baudot code and one whopping magnet to make the selected key print. Signals were sent serially and converted to parallel with a mechanical distributor on the keyboard. The whole works made a terrible racket and a lot of radio hash.

My own interest in RTTY was sparked in 1948 when I heard a peculiar tweedling of tones on the high end of two meters. It turned out to be John Williams and a dozen or so other RTTY amateurs hunting and pecking away at each other.

Within a few weeks, I had my own printer and had put together a tone generator and demodulator, complete with autocall circuits, and was joining in the fun. I also tried it out on 11 meters and made quite a few good contacts with W6s, including W6NRM, one of the more important RTTY pioneers. On 80m I had to use make-break keying since FSK was not yet permitted, but even so quite a few contacts were made, even out to California.

The two meter distances between stations were such that beams were required to make most of the contacts . . . and that meant that many operators were unable to copy what was going on. John solved this by setting up a repeater on top of the Municipal Building in downtown Manhattan. I won't soon forget the project as I was the one who climbed out on that copper roof one midnight in the middle of a snowstorm to set up the antennas. In case you wonder how I managed to hang on to the steep roof (you can see it as you drive across the Brooklyn Bridge or the Manhattan Bridge), there are little pegs sticking up, and these provided hand and foot holds. If it hadn't been the middle of the night I'd never have made it . . . one look down and I'd have had it.

The repeater made it possible for all of the RTTY gang to talk with each other. Most of us were using automatic circuits which made it so messages could be left for us when we were not present. Often I would leave my machine on short start, which would permit it to copy everything on the channel, and I would come home after a day or two away to find maybe fifty feet of rag chewing and gossip piled up on the floor.

Some stations were set up for automatic roger. This was a neat little circuit which would turn on the other fellow's rig and send back a couple of bleeps to let you know that your message had been copied. It wasn't exactly legal, but it was a good pioneering effort. It is a pity that the FCC has historically made it so difficult for amateurs to experiment and pioneer things. One wonders what might have been developed if amateurs had been permitted to have their head. Considering the resistance of the FCC to pioneering and their molasses-like acceptance of change, it's a wonder we've done as well as we have!

Speaking of resistance to change, we started to work toward getting the FCC to permit FSK on the low bands in 1950 ... it took several years before FSK was finally permitted. In all fairness to the FCC, the time it took was not so much a result of their slowness as the bitter fight put up against RTTY by the ARRL. The League countered every effort of RTTYers with legal efforts to stop them. Fortunately for the RTTY group, the ARRL was in very poor favor with the FCC. Despite their massive efforts, the ARRL racked up quite a few years when every single petition they put in was refused by the FCC and every one the ARRL fought was accepted.

This was the period when the Novice license was set up (with extreme resistance by the ARRL), and the Tech license. The chairman of the FCC was a ham and he was well aware of the attitude of ARRL HQ toward the hobby ... and he was determined to help amateur radio progress despite Budlong and Segal.

The ARRL didn't get a friendly reception in Washington until well after the uprising against Budlong and Segal led by Mort Kahn W2KR, when Budlong found himself suddenly "retired" and Segal replaced by Booth.

Here's Wayne in 1952. Watching are Faye Emerson, Bill Halligan, Skitch Henderson, Conrad Nagle and Herb Sheldon.

Insiders, well aware of the utter contempt ARRL HQ had for their sheep-like members, found things somewhat improved under Huntoon (Kahn's protégé). Hopefully someone will someday write a true history of amateur radio and put ARRL in its real perspective.

In the late 50's when the Model 15 printers started becoming available at reasonable prices, the Model 12s were retired. The Model 14 strip printers never got to be very popular ... hams wanted pages of paper, not strips.

When the FCC finally released rules permitting FSK on the low bands, they were already out of date and extremely inhibiting to experimenters. A goodly percentage of the RTTY crowd was experimentally minded, more interested in technical developments than in rag chewing. The rules stipulated 850 Hz frequency shift at a time when amateurs were getting ready to change from this age-old standard to much narrower shifts. New filter techniques and detectors made narrow shifts practical. Years later the FCC finally okayed narrower shifts.

The requirement for Morse Code identification of the RTTY station, which the FCC eventually admitted was not needed, irritated RTTY purists. Some retaliated with RTTY simulated Morse callsigns, others with very high speed CW, and some by ignoring the whole thing as much as possible.

It was RTTY that got me into publishing in the first place. I found myself working in a spot with a mimeo machine in 1951 ... they were rather rare at that time ... and within days the first issue of the "Amateur Radio Teletype Bulletin" was in the mail to those amateurs I

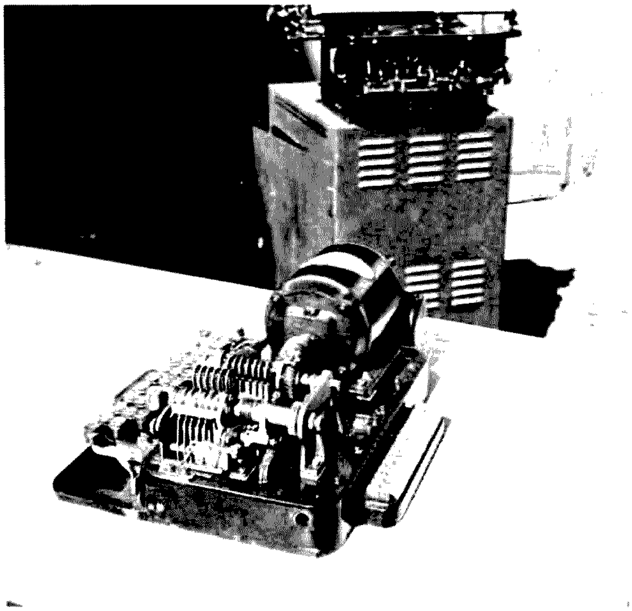

The Model 12 keyboard plugged into the big heavy table. It is dominated by the motor which drives the transmitting and receiving distributors. It was very noisy.

Punched tape drive. This is unusual in that it was built in about 1952 and had an electronic distributor instead of the usual motor driven mechanical job.

knew to be interested in the subject. I put this out monthly until I took over as editor of *CQ* magazine in January 1955.

As interest in the "Bulletin" grew, I shifted to offset printing, cramming as much as possible in the pages. By 1952 my column on RTTY started in *CQ*, and it was this that eventually led to my becoming editor. My enthusiasm for RTTY and other technical innovations has been apparent in the pages of the magazines I have edited down through the years.

So here we are thirty years later . . . the Model 12s are long gone, Model 15s are considered too old for most use, Model 28s are popular and many amateurs are using Model 33s and 35s, which cost about as much in today's dollarettes as the Model 12 in 1946.

Even more popular now

The Model 12 was eventually replaced by the Model 15 (19) printer. Here is a photo of an operator using a Model 15 in the 73 ham shack in 1963 . . . note key for Morse ID. We've always had nice operators.

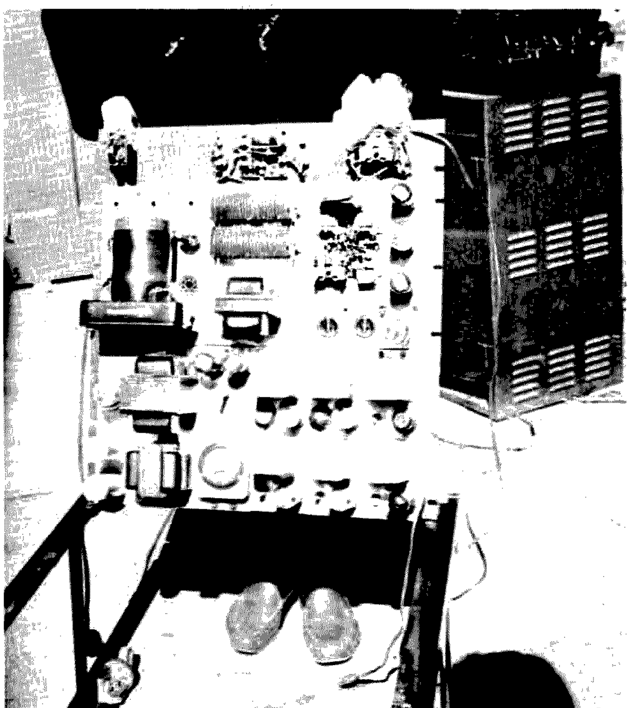

This is the converter and control panel for the Model 12. Note the filters at the lower right . . . three for the mark and three for the space tones of 2125 and 2975 Hz. Upper left is the polar relay for driving the printer magnets . . . selenium power supply for the magnets . . . autocall circuits on the upper right. This was designed and built by the grandfather of all RTTYers, John Williams W2BFD.

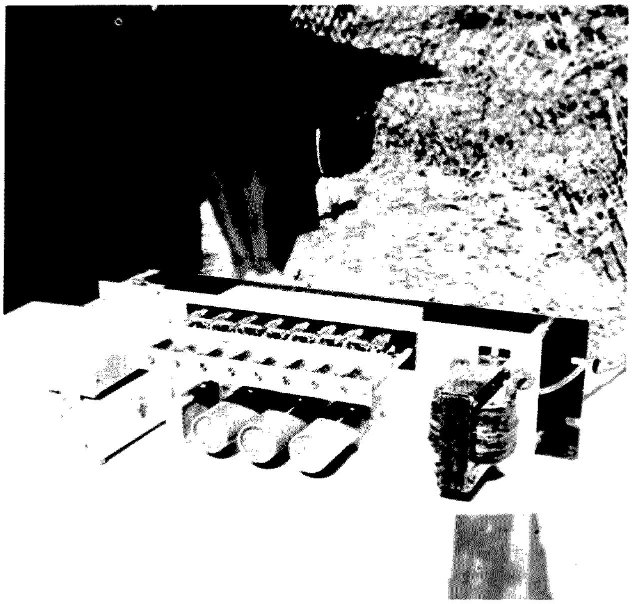

Back view of the electronic distributor showing plug-in tube module, power supply and AFSK tuned circuits.

are the video printing systems such as the HAL. A few amateurs are into generating RTTY or Morse via micro-computers and this seems to be the way things will be going in the foreseeable future. It costs less than a Teletype machine and is infinitely more flexible.

By the end of 1977 we should have several systems available for the lazy to buy which permit you to type out your messages, edit them as you please, with often used paragraphs or even pages available in memory for instant recall ... and the ability to make contact via FSK of any shift, make-break ... and using any popular code such as Baudot, ASCII, or Morse (at any speed ... probably up to or over 100 wpm).

It's quite possible that the RTTYers will be pioneering computer interfacing via radio, permitting exchanges of information, playing games, and a lot of things we haven't even considered as yet.

Oddly enough, RTTY, with its capacity for handling large amounts of traffic, has never been used much for this in amateur radio. Perhaps the same dichotomy which made ARRL HQ feel that they had to fight RTTY with every weapon at their disposal has been responsible. Traffic has, since the early days of amateur radio, been almost entirely an ARRL dominated function ... and the ARRL has never really come to terms with RTTY.

As far as I know, I am the only RTTY operator to ever make BPL using RTTY ... back in 1952 I set up my station on 42nd Street in New York and accepted messages for servicemen overseas at Christmastime. They were routed by two meter RTTY to DX operators and many thousands were sent to servicemen. This was all arranged by the local RTTY amateurs and the station was manned by volunteers for several weeks.

In all fairness to the League, it should be pointed out that RTTY never got to be simple enough for the uneducated amateur. It did require a pioneering spirit that few of the traffic handling amateurs possessed. And the routine involved in traffic wasn't interesting to experimenters.

This may change as more and more RTTY equipment is made available which is relatively foolproof. One can foresee the ham station of a year or two from now with auto ID, auto search receiver, auto logging ... things like that ... and all spelled out by the built-in program so it tells the operator just what to do on the CRT.

There are more than a few amateurs who are so wrapped up in the past that they do not consider RTTY or computers as legitimate parts of amateur radio. Pity ... for not only are they preventing themselves from having a lot of fun, they are pressuring other amateurs and the magazines to preserve things as they used to be instead of looking to the future.

Needless to say (hopefully), I am most interested in what you pioneers are doing with RTTY and microprocessors in the ham field. There is no question in my mind that this is one of the most important developments in the history of the hobby. Don't forget to keep notes of your work ... and write articles so the rest of us can benefit by your work ... and enjoy. ■

W2TLY, W2DXD and John Williams W2BFD.

Group of pioneer RTTYers at meeting on Long Island about 1951.

Big Noise Burglar Alarm

- - lights flashing, horns blaring

Stephen E. Uhrig WA3SWS
3893 Jumper Hill Lane
Ellicott City MD 21043

With the increase in crime rates, smart amateurs are giving serious thought to some sort of security system in their automobiles to protect their investment in communications equipment. While there have been dozens of articles published recently on alarm systems, with all sorts of fancy control circuitry, the majority of these alarms merely activate the regular car horn or a simple siren. Presented here are several other suggestions for drawing attention to your vehicle when there is an attack on the car.

A burglar alarm should fulfill two objectives. The first, hopefully, is to act as a deterrent and keep an intruder away from your property in the first place. If he wants what you have bad enough to attempt intrusion, the system should attract enough attention to make him extremely uncomfortable while he is in the progress of burgling. It is also advantageous if you get some sort of notification if you are removed from the vehicle.

The two things burglars hate are noise and light. Most alarm systems make some sort of noise, but not many people have given any thought to turning on some lights on the car when a break is detected. Many times I have heard an alarm system sounding on a vehicle in a crowded parking lot at night, but until you are standing right in front of it you cannot determine just which car is sounding off. It is a simple matter in most vehicles to activate the 4-way flashers with an alarm system and make the alarm that much more effective. As mentioned previously, the noisemaker device incorporated into the system is usually the car horn or one of the Mickey Mouse mechanical sirens. Either of these leave a lot to be desired in anything but the most elementary system. The car horn is not intended for continuous operation, and will soon overheat and burn out. A mechanical siren is not really loud or attention-getting, and can be easily disabled by the burglar by jamming the impeller with a screwdriver or ballpoint pen. In addition, these sirens are quite directional. They must be positioned near the front of the car and point out through the grille. The sound from these sirens is not the characteristic rise-fall sound of a police siren, but rather just a constant high frequency wail that in my opinion does not do the job required of it.

An excellent solution to the problems associated with the car horn is shown in Fig. 1. This circuit, engineered by K3UPU, overcomes most of the disadvantages of using the car horn that were discussed earlier. As the horns are switched on and off, the duty cycle is such that the horns will have time to cool off and can run in the alarm condition virtually forever with no adverse effects. By switching the two horns alternately, a very distinctive and effective sound is produced which is sure to draw attention to the vehicle. Most vehicles have two car horns which are driven in parallel. One side of each horn is always grounded, while 12 V dc is applied to the high side of the two horns by the horn relay when you push the horn button on the steering wheel. In K3UPU's alarm system, a standard heavy-duty flasher is used to cycle an SPDT relay. The N.O. and N.C. contacts of the relay are hooked to the high side of either horn. When 12 V dc is applied to the circuit from the alarm system control circuitry, the two horns on different frequencies are sounded alternately, producing a very penetrating foghorn-type sound. My vehicle, a 1971 Ford Torino, has only one horn installed. If this is the case with your car, a second horn can be obtained from a junkyard for a dollar and mounted in a convenient spot behind the grille.

A very excellent relay for the application is available from Tri-Tek for $1.50. These relays appeared in a recent advertisement in *73*. This circuit is good for a simple alarm when the car owner wishes to keep things uncomplicated and use equipment already available in the car.

Probably the best practical device for a mobile alarm system is an electronic siren. These can be obtained quite inexpensively, offer you much greater control, and are useful for a variety of other applications by the amateur. My favorite is the prepackaged siren/PA system designed for emergency vehicles. These are available from Federal, Motorola, or even Heathkit. I use the Heath unit in my car and am very pleased with it. The

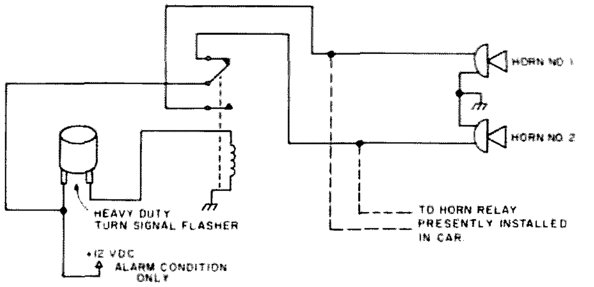

Fig. 1. K3UPU's foghorn alarm circuit.

Heath siren/PA offers both automatic and manual wail, yelp, and PA, as well as an input to the audio amplifier for a 2-way radio input. The wail takes 6 seconds to complete an up/down cycle, while the yelp takes 1/3 second for 1 cycle. To convert the Heath for use in a burglar alarm, it is necessary to have 12 V dc available when the alarm is tripped – as well as a dry contact closure. The unit draws about 7 Amps at 12 V dc for 55 Watts of audio out. This must be taken into account when selecting a relay for the system. The contact closure is necessary to select the mode of operation once an alarm has been detected and 12 V dc has been applied. I tapped in at the wafer switch on the front panel. The relay for this only needs to handle a few milliamps. 55 Watts audio output is about what a fire engine or police vehicle runs, so you can imagine the ruckus it will cause when a burglar sets it off.

Electronic sirens designed primarily for alarm use are popular in the security field and are available from most security equipment suppliers. There should be several listed in the Yellow Pages. These have the advantage of costing less than professional sirens, and are more readily adaptable to an alarm system. The audio output of these is usually only a few Watts, but is enough to do a very creditable job. These cost about the same as a cheap mechanical siren and are much better. The sirens are available either with a driver and speaker together, or separate, for special design applications.

Along the line of drawing attention to the car when an attack has been made, why not consider ways of turning on lights with the system? The leads to the 4-way flasher switch are accessible in the wiring harness that runs the length of the steering column. A contact closure will activate these. Another place to get at lighting wires is at the brake pedal switch. By putting a flasher in parallel with this switch, the brake lights will flash. Or by using K3UPU's circuit in Fig. 1, you can flash the headlights on and off, either alternately, simultaneously, or high and low beam. This will create a desirable effect. If you are serious about protecting your car, you can mount single faced trailer lights inside the back window on the rear deck. These can be wired in parallel with the bright filament of the 1157 taillight for normal brake lights and turn signals, or they can be used with the circuit in Fig. 1 and be flashed alternately. These lights also make for safer driving, as the car will be much more visible on the road. Another idea is to mount a rotating beacon inside the back window. Do not use any color other than orange without checking local regulations.

All this is great to scare the intruder away, but what if you are shopping or visiting and are some distance from the car? The alarm could sound for hours before you wandered back to hear it. Most likely it will not go too long, as I have seen police officers or residents rip out every wire in sight trying to disable the alarm. Remote notification systems are becoming more and more popular in commercial security. This should be right along the amateur's line. There are several companies that market transmitter/pager combinations designed for alarm use, but the same thing can be accomplished by an enterprising amateur for less money. A VHF Engineering transmitter board and a recycled commercial pager would make a good combination. If you use a receiver that does not have tone coded squelch, make sure to modulate the carrier somehow. I have had a receiver pick up an alarm signal which I didn't notice for some time, because the signal was full quieting. Keep the antenna inside the vehicle where it will be protected. You should still get enough range for most purposes. My system uses a TR-22C which has been modified to extend to my commercial frequency while remaining usable on 2 meters. It is modulated by an acoustically-coupled SC-628P Sonalert. This pulsating Sonalert is loud enough to fully modulate the transmitter when the microphone is on its clip on the dash and the Sonalert is under the dash. I have had some embarrassing moments when I was working an amateur channel before I left the car and the TR-22C was still on the amateur channel when the system tripped. In fact, I haven't been on the particular repeater since. I monitor the system on a commercial handie-talkie that I usually have with me. You can do all sorts of fancy things using your imagination. For a while I think I had the only mobile in existence that was connected to a central alarm monitoring station. I had a system that would bring up a repeater autopatch and dial my home, telling whoever answered that the car was being broken into. A COR monitored the repeater and stored the alarm message until the repeater had been off the air for 60 seconds. The tape mechanism for the voice signal was not reliable and the whole system was not really practical, but it was fun to play with for a while. It's important to keep the alarm down to a size that you can handle. If it gets too involved it won't be reliable – something to stay away from. Give some thought also to protecting the various components of the system from defeat. If the burglar wants what you have bad enough, as he will if you have a fancy mobile setup, he will be able to defeat *any* alarm you might have. Try to think like the burglar might. Is there a key switch he could monkey with? Can he get to the wiring from underneath the car? Slip some flexible conduit over the battery cables. Or, I went a step better. I am running a supervised alarm system in my mobile where if any part of the wiring is cut it will trip the system.

My regular car battery does NOT power the system. Even if the burglar does cut my battery wires, the system is still armed. Power for the alarm is provided by gel cells inside the car. These are recharged by the car's electrical system while I'm driving.

While the thought is in my mind, don't overlook a good loud bell for mobile applications. Bells sounding from a car are really attention-getting. Ademco makes good ones that are cheap but rugged. Again, check the Yellow Pages for alarm equipment distributors.

In closing, I'll say this: Don't put too much confidence in your alarm. Nothing will stop a determined burglar, especially if he has the time to figure it out. Be careful where you park the car and arrange for it to be checked up on occasionally if you are going to be away from it for a period of time. And again, the best security of all is having nothing worth stealing. ■

David J. Brown W9CGI
RR 5, Box 39
Noblesville IN 46060

Dandy Digital Dial Decoder

-- to control whatever you want

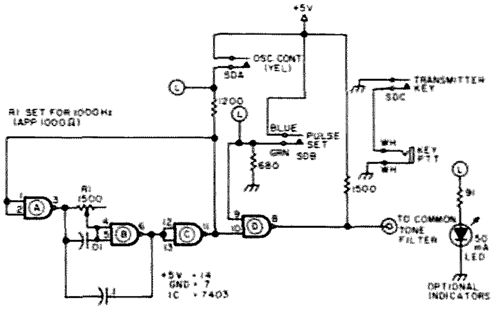

Fig. 1. Dial to tone encoder. Credit: Stamatios V. Kartalopoulos, University of Toledo, E. E. Department.

If you have a need for remote controlling anything and for whatever reason (cost, complexity, etc.) have found that touchtone signalling is not for you, then indeed this article may be the answer to your prayers. This article describes a two digit rotary dial decoder. Instead of a bundle for a touchtone dial, all you need on the sending end for this system is an easy-to-find rotary dial from the older series telephones and a single tone oscillator.

General Description of System

Following the system from the beginning with the originating station sending a tone, this tone is then broken up into pulses by the rotary dial. Whenever the dial leaves its rest position, there is one set of contacts that closes and remains closed until the dial again comes to rest. This set of contacts is wired in parallel with the user's PTT line, so the transmitter is automatically keyed while dialing. A second set of contacts that closes before the PTT set and opens after them allows the tone oscillator to run up to frequency before going out on the air. This set of contacts applies +5 V to the oscillator to turn it on.

A third set of contacts, called the pulser set, is closed during the clockwise rotation

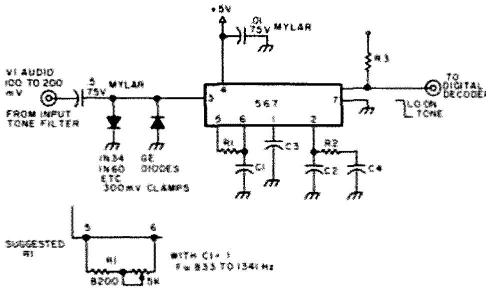

Fig. 2. C1: .1 uF. C2: 1.0 uF/6 V. C3: 2.2 uF/6 V. C4: 250 uF/6 V. R1: 6.8k to 15k. R2: 4700. R3: 2000. R2 reduces B.W. to 8% @ 100 mV in, 5% @ 50 mV in. Alternate (no R2, C4): Make C3 3.3 uF for 1000 Hz. C2 is loop low pass filter. For 1000 Hz, R1 is set at ≈ 10k. Input R = 20k. Smallest reliable V_i = 20 mV.

$$F_o = \frac{1.1}{R1C1} \qquad V_i \leqslant 200\ mV$$

$$B.W. = 1070 \sqrt{\frac{V_i}{f_o C2}} = \%\ DFf_o$$

of the dial, and then opens momentarily (like a ratchet action) at each digit position from the number you dial back to rest. There are eight openings for the digit "8," etc. This set of contacts is wired to keep the audio oscillator output from reaching the transmitter microphone audio input by any number of means (see Fig. 1).

The results are the operator sending a tone sequence of: 1. a steady tone for the duration of the clockwise rotation of the dial; 2. a number of "windows" of no tone as the dial returns to rest – equal in number to the number dialed; and then 3. a return to the transmitter unkeyed condition when the dial reaches the rest position. The decoding circuits are arranged in this "negative" logic sequence because this means a valid tone must first be received, thus leaving out incorrect tones and signals too weak to accurately trigger the system to a proper count. Only if the user is strong enough and has the proper tone will anything at all happen at the system! Also, only the addition of a second tone oscillator at the user end will double the number of system available codes. A duplicate decoder on the second tone channel at the remote site is required, but all boards are interchangeable with the first set except the tone signal decoder. This allows keeping at least one system up by using boards from the second set. If the system sees the first valid tone, it should in turn see each of the following tones and the windows between, and thus a proper count occurs.

The first decoding (for tone frequency) is done to separate the tone used for dialing and other tones used for control in our system. Therefore, the decoder appears separate from the control board as part of our

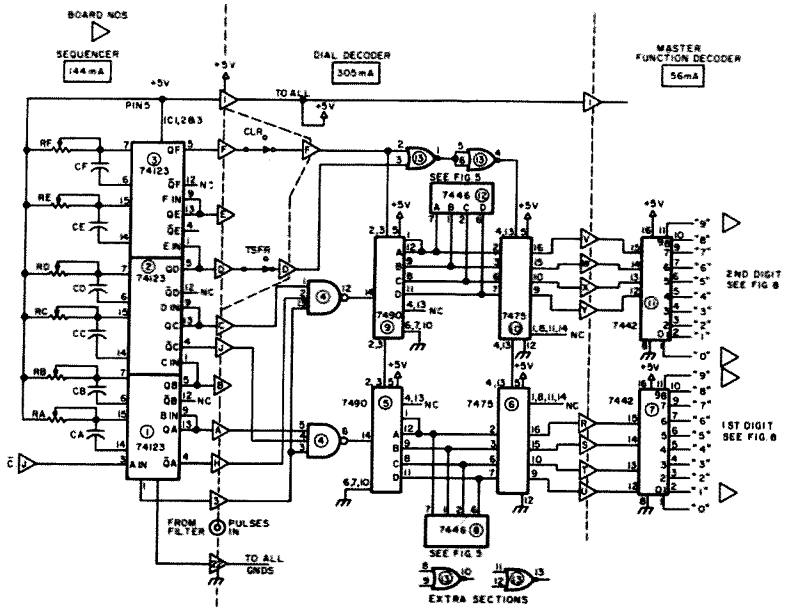

Fig. 3.

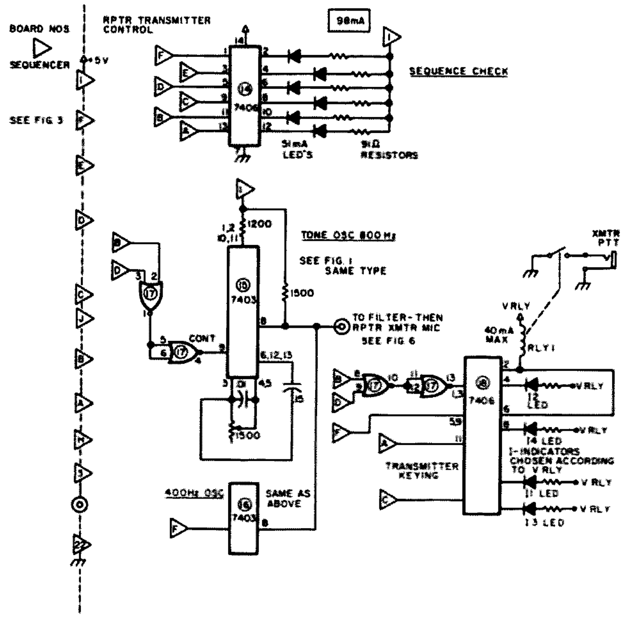

Fig. 3(a).

tone decoder board (see Fig. 2). The tone decoding is done by a rather conventional tone decoder PLL IC, a 567 type.

In our system, whenever a 1000 Hz tone is present, the decoding circuits of the 567 PLL produce a low on pin 8 of the 567 IC. This low is then carried into the control board on pin 3 (see Fig. 3).

The tone decoder changes the present or absent 1000 Hz tones into a TTL compatible level shift, from highs to lows. These pulses can then be operated on in a normal TTL manner.

The first negative going input pulse (tone received, dial moving clockwise) starts the sequencer running. The sequencer is a series of one-shot devices hooked "tail-to-head," such that the first input starts the first timing period, call it period A, and the action of its Q output going low at the end of period A then triggers the start of period B in the next one-shot, and so on through the end of period F. This makes the sequencer self-completing; thus if a user starts a dial command and only dials one number, the decoders decode the sequence as a 10 - 20 - 30, etc., command zero understood. We use this to advantage as all-off, reset, stop, etc., for a row of commands. In the case of 10, this cancels or resets all commands 11 to 19. The sequencer goes all the way through its steps after the first valid command, regardless of the second digit dialed or not, and returns to 0 - 0. This way it is impossible to "lock up" the system by dialing one number, dialing clockwise and holding the dial at the stop, etc.

The sequencer is the master timer, and as such, controls the decoding process from the first clockwise rotation of the dial through both numbers received (see Fig. 7).

Time period B is used to

key the repeater transmitter with an 800 Hz tone at the end of the first number dialed period, period A, and to let the user know to immediately begin dialing his second number when the tone quits. The second number period is period C. Period D is used to transfer the two received numbers, at this point changed from the sequential or serial form to parallel or BCD form by the 7490s, over to the decoder 1-of-10 line device's inputs – 7442s in this case. This transfer is accomplished by the use of the 7475s called latches. These latches are such that the input lines change with the incoming BCD information as the 7490s count up to the correct number, but do not "transfer" that BCD information to the output lines until the clock lines of the 7475s go high. Without the latches, the 7442 decoders would follow the 7490s' outputs and produce false low outputs at the output pins of the 7400 or 7403 function decoders for some numbers prior to and including the number desired: in our "73" example, 00, 10, 20, 30, 40, 50, 60, 70, and 71, 72, and the desired 73. This you do not want. With the latches you have exclusive outputs, at 00 and 73, the number desired.

Period E has several not too apparent reasons for its existence. One, it serves as a settling time to allow the translated (serial to BCD) and transferred number to be decoded by the function

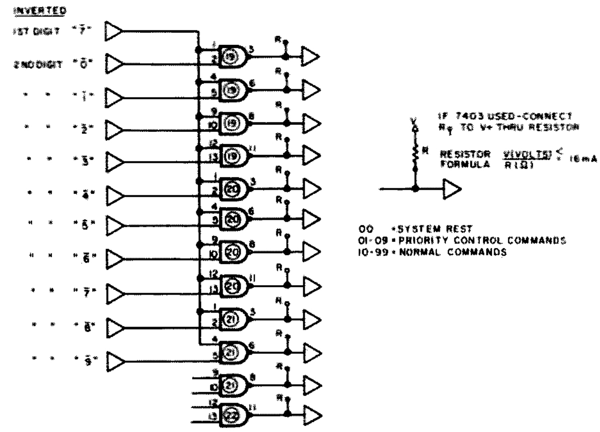

Fig. 4. (Row) function decoder boards. (70s shown.) 7403s – Note: If destination is more TTL, 7400s would be used (with no Rs).

decoders; thus the decoders remain low at the output for a finite time. This finite time is used in analog functions to allow a given amount of decoder output low time per times the number is dialed. A better explanation of how this is used is found later under the function decoders themselves. At least a third reason for period E is that it allows both clear and transfer to occur in Period F, without the clear getting involved with the dialed number transfer occurring during Period D.

Period F is a reset to 00 period by causing a high on both the clear and transfer lines at the same time, thus transferring the 00 cleared information to the function decoders. A 400 Hz tone is sent during this period back to the user, indicating the system is ready for more of the user's information. The

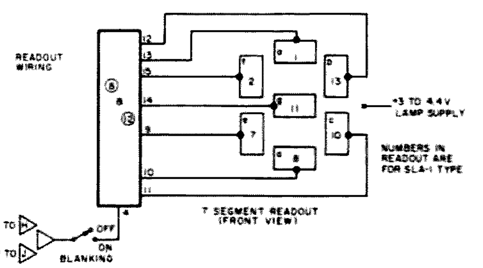

Fig. 5.

sequence is an 800 Hz tone sent to user after period A (during period B), an 800 Hz tone sent again after period C (during period D), a brief pause of period E, and a 400 Hz tone sent indicating period F – see Fig. 3(a).

With the actual decoder functions covered, a final board is left in the control group, and it is what tells the user what is happening at the repeater. The transmitter board includes an LED driver package 7406 to indicate at the repeater what state the sequencer is in.

This board also contains the two tone oscillators for 800 and 400 Hz used into the repeater transmitter to tell the user the state of the sequencer. See Fig. 7 for the exact timing sequence we have found workable.

The decoding necessary for transmitter keying is also on the transmitter board, and the same IC uses LED indicators to show whether the transmitter is keyed and whether it has 800 Hz or 400 Hz on it. The proper sequence for these LEDs is: 11 (3 sec.), 12 (200 ms.), 13 (3 sec.), 12 (200 ms.), and 14 (800 ms.).

Fig. 4 shows a typical function decoder board. One reason for building them this way is the many wires required in and out of a board versus the available connectors. Taken a row at a time like this, one line is needed for the 10s line in, ten lines for the units inputs, ten lines for the discrete ten function outputs, and one each for the +5 V and ground, or 23 lines. This is one over the 22 pin single side connectors, which isn't bad, or you can use the 44 pin connectors throughout as we did. Either way, all function decoder boards are identical and interchangeable, and you need build only eleven of them to have a full deck plus a spare to fit any one of the ten in use. The spare board is a good idea for a heavily used system. Something about fixing the system in a hurry, and then figure out what gotcha later – hi!

Fig. 5 gives the pinout on the readout decoders (BCD to 7 segment) and one possible readout arrangement. Without the readouts, troubleshooting becomes a nearly impossible task. You may want to leave the BCD from each digit as stakes or connectors, and build the decoder drivers and readouts in a separate little box as I did, thus allowing the readouts to troubleshoot other BCD type projects (i.e., DVM, counter, etc.).

Technical Breakdown

To describe a project of this complexity would require many pages on a pin-by-pin basis, so please allow me to run through the first digit, then point out only the differences for the second digit.

Sequencer – Heart and Brain of System

The 567 PLL decoder puts out a low for a 1000 Hz tone received, so as the dial goes clockwise, pins 3 of the sequencer and dial decoder boards go low. This low triggers the first one-shot on the sequencer board. Each IC section in the sequencer starts off with a high at all $\bar{Q}$

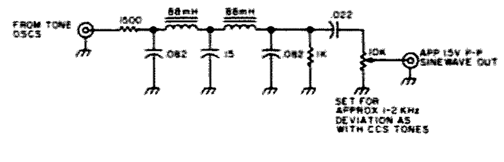

Fig. 6.

outputs and a low at the Q outputs. During each of the sequences, this reverses, such that Qa goes high and $\bar{Q}$a goes low for period A, *then* Qb goes high and $\bar{Q}$b goes low for period B, and so on. The only line then left unexplained is the IC1-3 going to $\bar{Q}$c. Pin 3 is the clear line for IC1 section A, and wiring it to $\bar{Q}$c, which is high during period A, allows the first low from the 567 to trigger section A, starting period A. When period C comes along, $\bar{Q}$c goes low and disables the retrigger feature of section A. This keeps the user's second digit from again triggering section A and starting a new sequence. Pots Ra through Rf set the exact one-shot times for sections A through F, and Ca through Cf are the Cs of the RC timing network. The Rs are all 10k thumbwheel PC mounted pots, and the Cs are chosen for the one-shot time desired. (Good starting values are: 500 to 1000 uF for Ca and Cc, 25 to 50 uF for Cb, Cd, and Ce, and 100 to 150 uF for Cf. The pots can then trim the time to the desired length.)

Dial Decoder

As the low from the 567 PLL sets the first one-shot period A, the same low is applied to IC4, pins 3 and 13. Any input line low forces these NAND gates to have a high output. Since $\bar{Q}$c is high at this time, IC4-4 is high. Qa is high so IC4-5 is high; thus only IC4-3 must return high to cause a low at the output IC4-6. This is exactly what happens during the pulse windows (no tone) of the dial returning to rest.

At this same time IC4-1 is low due to Qc being low. IC4-2 is also low due to $\bar{Q}$a being low. As such, IC4-12 output remains high regardless of the pulses on IC4-13, and the pulses only enter IC5-14 (Qc high, $\bar{Q}$a high, Qa low, $\bar{Q}$c low reverses this for the second digit during period C and one difference of the two digits is now pointed out).

The clear line of IC5, pins 2-3, is low during periods A through E, and therefore IC5 and IC9 are free to count during any of these periods (periods A and C being the ones that matter). If the readout blanking switch is turned to off, you will see each of these counts as changing BCD information (and thus readout numbers) during the dial returns.

After the period A loading of IC5 and the period C loading of IC9, period D occurs. A high on Qd, IC2-5, goes to IC13-3, a NOR gate. When either IC13-2 or IC13-3 goes high, IC13-1 goes low. A second section of IC13 is wired as an inverter to cause a high at IC13-4. This high goes to IC10 pins 4 and 13, and IC6, pins 4 and 13, the clock or transfer lines of the 7475s. Up until this clock high, the BCD output from the 7475s has been 00 or rest. Upon the clock high, the BCD outputs change directly to the loaded BCD information of their respective 7490s. In our example, the change is from 10s $\bar{Q}$a$\bar{Q}$b$\bar{Q}$c$\bar{Q}$d (0), units $\bar{Q}$a$\bar{Q}$b$\bar{Q}$c$\bar{Q}$d (0), to 10s Qa$\bar{Q}$b$\bar{Q}$c$\bar{Q}$d (7), units QaQb-$\bar{Q}$c$\bar{Q}$d (3), or direct from 00 to 73.

This BCD is sent straight on to the 7442's 1-of-10 line decoders. The 10s "7" line, IC7-9, and units "3" line, IC11-4, go low.

All ten lines of the first digit (10s) and second digit (units), from IC7 and IC11 respectively, are taken to another board in our system, though that board's contents (see Fig. 8) could be built on the decoder board with IC7 and IC11. We wanted high and low decoded outputs available, and this made 20 high, 20 low, 8 input, +5 V, and ground, or 50 lines – too many for the connectors we were using. With a second board you have 10 inputs (one low), 10 outputs (one high), per IC (10s and units), for 40 lines, plus +5 V and ground, for 42 lines. Fig. 8 should be self-explanatory in that anywhere you have an input line coming in low, it leaves high, and vice versa. For our 73 example, the first digit "7" input is low entering and high leaving, and second digit "3" input is low entering and high leaving; thus only the "7" and "3" leave the inverter board as highs.

Following these two output highs to the (Row) function decoder board for 70s row, they enter the inverted first digit "7" and second digit "3" lines, and go to one pin of all the NAND gates, and to IC19-13 respectively. Regardless of whether the 7400 or 7403 ICs are used, two highs at the input

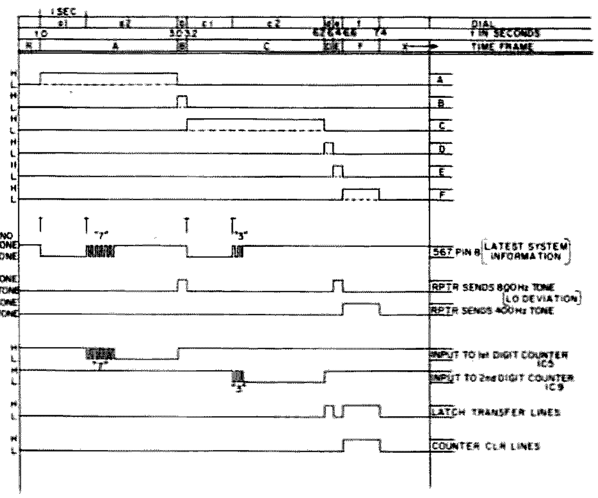

Fig. 7. Timing diagram.

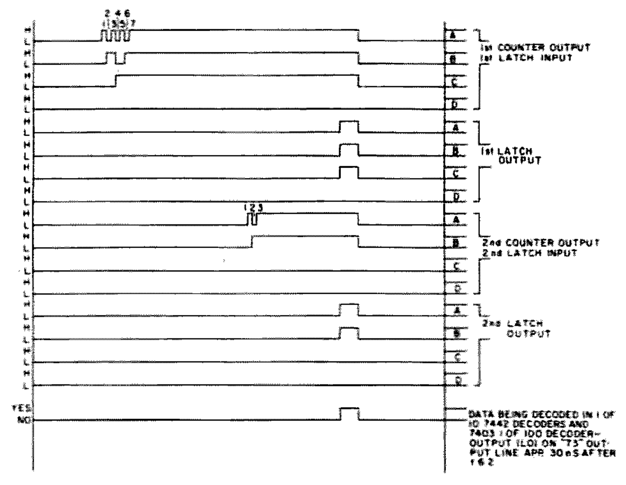

Fig. 7 (cont.).

of these gates cause a low at the output, and a low will appear at IC19-11 for a duration of slightly less than period E. You now have your 1-of-100 functions decoded.

Whether these final lows are going to drive further TTL level logic (use 7400), or drive devices such as triacs, relays, etc. (use 7403), will determine which NAND gate devices to use in the final row decoders. The 7403 has an uncommitted output device capable of sinking about 16 mA. A safer bet is to use at least a transistor buffer capable of the voltage and current you need for the relay, etc., and use the 16 mA capability lightly to just drive the transistor base. We do a little of each, so only one row decoder is shown, and it is shown less its final devices.

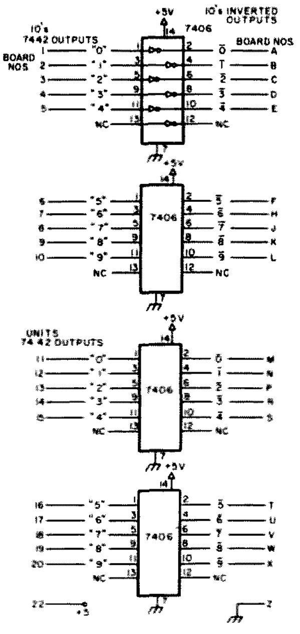

Fig. 8.

The range of devices is as varied as the things we are controlling, so none can be shown here or they would take more room than this entire article. For example's sake in the TTL device department: A 74193 and 7445 combination make up a 10 step volume control that is bi-directional. The same type pair make up a 10 step squelch control. This is our number 21-22, and 23-24 numbers for volume down-volume up, and squelch looser-squelch tighter respectively. Using a 60 series number enables a second tone decoder at a second frequency, and then 5 digit numbers can be received which represent antenna coordinates for the EME array. Example: 10165 dialed with the second tone decoder turned on by the 60 series number sent at 1000 Hz will decode as azimuth 101 degrees, elevation 65 degrees. That decoder works just like this one only there are 12 timing periods, 5-7490s, 5-7475s, and the rest from there out deleted. The BCD from the 7475s goes directly to 7485 comparator ICs that compare each number to where the beam is really at (using a coded disc on the elevation and azimuth drives), and then corrects the present location to the new dialed location in a most significant to least significant order at a different speed for each. High speed (1 rpm) for 100s, medium speed (.5 rpm) for 10s, and low speed (.1 rpm) for units, in the case of azimuth. This allows slowing down of a large mass (antennas) as it nears the desired heading.

The amount of hardware, kept mostly at the repeater site location to simplify the job for the user, has grown over five years now, and simply can't be described in a single article. Broken into several articles, I'm sure each part will find other uses — such is the way with hams. One side use at my QTH has already been found by using the teletype drive and comparator setup used for the antenna on EME coming out to a plug, so it may be plugged to more than one array. I am presently adapting it to an attic mounted 4 element yagi on 2m and crossed 6 elements on 3/4m to use mode B Oscar 7, or the 2m alone and a fixed array on 10m for A mode and Oscar 6.

Summary

That about describes how it works, and the usual SASE will get you a reply if any problems arise. I have even worked out a few ideas along other uses, such as a remote control device for devices at home while I'm away (don't care to try touchtone for *that* over the phone lines in a touchtone area!!). After I got this decoder working, I even worked out a touchtone-looking panel that sends out the dial pulses, for those of you who would rather punch than dial switch. Seriously, it makes a good push-button to serial device for other things, such as getting out just one to nine pulses whose duration (overall) you can easily vary. That's another whole article though.

There have been enough articles now to skip most of the cautions like *use a well regulated + 5 V, not 4 or 6 V.* Our decoder worked the first time with the exception of the added $\overline{Q}c$ line back to the A section input clear line — an oversight on my part from working with too many non-retriggerable one-shots.

Please advise me of your uses, and may I add at this time, if you have a project that you think could be TTL digital (controlled, run, driven, etc.), please drop me a line. This is *not* a promise to design it for you, but if it corresponds to our needs, or is simple, or we have already done it but not written it up, or it is just plain intriguing and I have the time, I'll give it a whirl. Bear in mind, since the hardware answer to your idea or question will be my design, I would retain the right to write it up — build it — use it — etc. O.K.? Let's hear from you, and 73. ■

Ralph E. Taggart WB8DQT
602 S. Jefferson
Mason MI 48854

Weather Satellite Display Control

--integrating CRT and FAX displays

In a series of previous articles in *73*, I have described two basic systems for the display of weather satellite pictures. The first of these was a multimode weather satellite monitor unit using cathode ray tube (CRT) display (August, 1975) and the second was a photographic facsimile system for readout of NOAA satellite pictures (September and October, 1975). In the concluding article on the FAX system I outlined the relative advantages and disadvantages of both display systems and ended with the remark that an active satellite station should actually have both systems available for maximum flexibility. A great many versions of both systems have been constructed, and some stations are reaching the point where they would in fact like to operate both systems. The advantages of this are many for operators who copy a great many satellite pictures. If the interfacing of the two systems is done properly, the oscilloscope which is normally required for FAX picture phasing can be eliminated. The FAX component of the system can produce quality pictures in a relatively large format — and at a low cost. The CRT monitor can be used to make negatives of particularly interesting pictures for later duplication at any size desired. The monitor can also be used for APT WEFAX copy that is not compatible with the FAX recorder. This article will

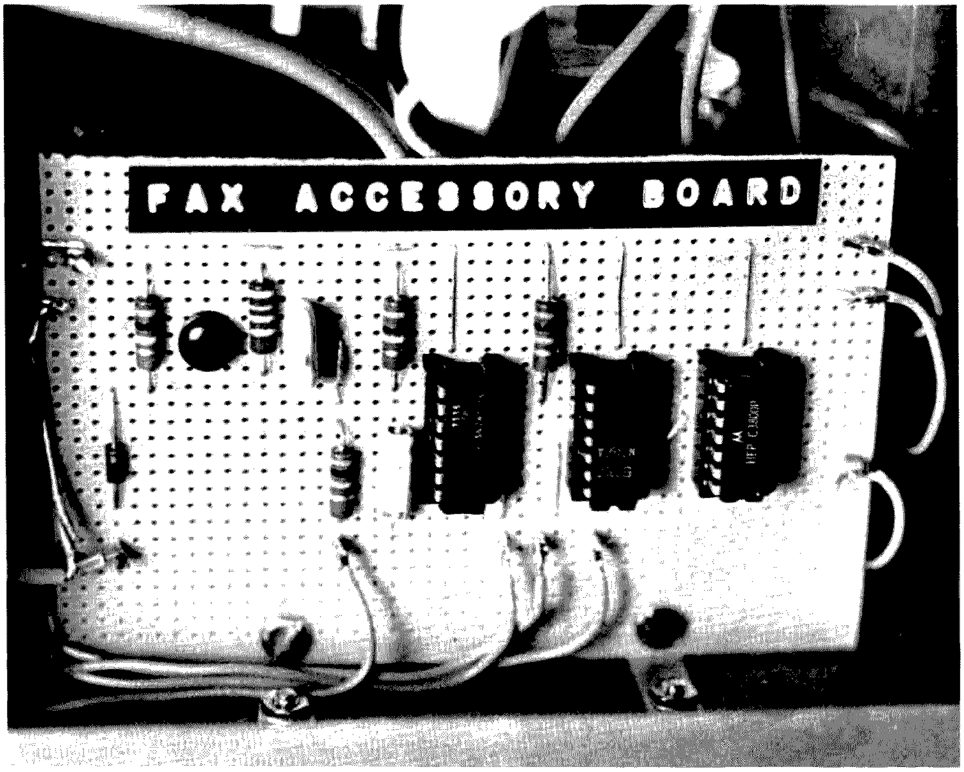

Fig. 1. Accessory FAX module installed in one of the author's multimode weather satellite monitors. A small piece of perforated board with 0.1 inch hole spacing accommodates the ICs and discrete components. Wiring the module itself takes about an hour and can be added to the monitor during or after construction.

describe a simple module that can be added to the satellite monitor to provide control of the FAX system. Pictures can be phased and adjusted on the monitor and the picture as seen on the monitor will be precisely what is printed out on the FAX recorder. The monitor can thus replace the solid state module in the FAX system, with the additional bonus that FAX printing will no longer be a "blind" operation. Simultaneous with the FAX printing, a photograph of the CRT display can be taken to provide a photographic negative for file use and later duplication in various size formats. I will also describe modifications to the FAX system that will enable you to print pictures at the 96 rpm drum rate with line blanking, thus resulting in large size pictures (averaging 5 x 7 inches for a 10 minute pass) with rolling pin sized drums. For stations who have not yet begun to construct display facilities, these modifications can be incorporated at the very beginning. If you start with the CRT system — a logical first step — FAX capability can be added at somewhat less cost than if it was a completely independent system.

If we are to tie together the operation of the CRT and FAX systems, several functions must be accomplished:

(1) The monitor must supply a phase locked 48 Hz ac signal for operation of the drum amplifier in the FAX system;

(2) Provisions must be made to trigger the monitor display from the rotation of the FAX drum;

(3) The video circuits of the monitor must drive the lamp driver circuit of the FAX system and, ideally, system levels should be such that the contrast as set on the monitor will correspond to the contrast range as printed in the FAX system;

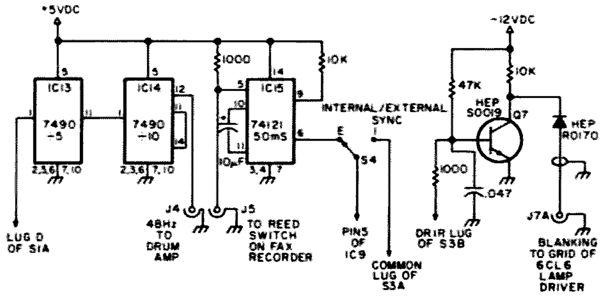

Fig. 2. Schematic of the accessory FAX module. Since the module is an addition to the basic monitor circuit, component numbers are consistent with the monitor circuit described in 73 (August, 1975). All resistors are ¼ Watt, 10% composition. Decimal value capacitors are 50-100 V mylar tubulars, while capacitors with polarity indicated are 16 V miniature electrolytics. J4-J7A are new RCA phono jacks added to the rear apron of the monitor. S4 is SPDT toggle switch added to the front panel. Power for the module is obtained from the monitor circuit.

4) The line blanking required to select either visible light or IR data in the monitor must control line blanking in the 96 rpm FAX system so the data channel displayed on the monitor corresponds to the FAX printout.

All of this sounds complicated, but in reality it can be accomplished by a small module consisting of three ICs and a single transistor. If this module, shown in Fig. 1, is added to the monitor, the monitor performs all of the functions of the original solid state module of the FAX system in addition to carrying out phasing and setting of proper video levels.

The schematic of the module is contained in Fig. 2 and, since it is essentially an "add on" to the monitor circuit, component designations follow those for the original monitor circuit. A sample of the phase locked 2400 Hz reference tone is routed to IC13 and IC14, providing a total frequency division of 50, which results in the desired 48 Hz output from IC14. This signal is routed to a new jack (J4) on the rear apron of the monitor, which is connected to the input of the FAX drum amplifier circuit.

Triggering the monitor display from the rotation of the FAX drum is accomplished by the small magnetic reed switch on the FAX recorder which closes once in every revolution of the FAX drum. This switch is connected to another new rear apron jack (J5) on the monitor. A lead from this jack to the input of IC15 in the module — a single shot multivibrator — results in a relatively long output pulse (50 ms) whenever the reed switch on the recorder closes. The long output pulse eliminates the effect of contact "bounce" in the reed switch, which might otherwise result in erratic triggering and blanking control. This pulse is routed to one lug of S4, a new switch on the monitor front panel which selects either internal triggering of the monitor display (normal) or external triggering from the FAX drum. In the external position, S4 routes the FAX trigger pulse to the horizontal trigger monostable in the satellite monitor, thus triggering the line display once every drum revolution.

Supplying processed video from the monitor to the FAX lamp driver is accomplished by connecting a shielded lead from the secondary of T1 to another rear apron jack (J6). (See Fig. 3.) Since the video level required to drive the lamp driver circuit is slightly less than that required for the monitor display, a 10k gain pot at the input of the lamp driver in place of the fixed 470k grid resistor permits the gain of the FAX unit to be adjusted so that proper FAX printing coincides with optimum display on the monitor.

FAX blanking with the 96 rpm format is accomplished by Q7 (Fig. 2) driven by the line blanking pulse from the monitor circuit. This transistor shuts off the lamp in the FAX recorder whenever a line is blanked in the monitor display; thus whatever channel (visible or IR) is

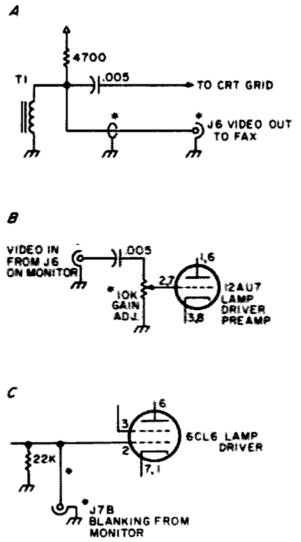

Fig. 3. (a) Video connection from the secondary of T1 in the monitor to the new video output jack on the rear apron. (b) Replacement of the fixed 470k resistor at the input of the FAX lamp driver to permit adjustment of video drive. (c) Addition of a blanking input signal (J7B) at the grid of the 6CL6 lamp driver of the FAX circuit. Asterisks (*) mark the new components.

viewed on the monitor will be printed by the FAX recorder. The signal from Q7 is routed to another new jack (J7A) on the rear apron of the monitor. J7A is connected to a new jack (J7B) on the lamp driver chassis that provides a connection to the grid of the 6CL6 lamp driver.

Drum Diameter (Inches)	Design RPM	Drive Motor Selection	Earth Scan Width (Inches)	Picture Length (10 minutes)
2.0	13.8	12/60	3.8	6
2.25	15.4	20/48	4.2	8
2.5	17.2	20/48	4.8	8
2.75	19.0	20/60	5.2	10
3.0	21.2	20/60	5.6	10
3.25	22.0	20/60	6.0	10

Fig. 4. Data for traverse motor selection based on the diameter of the FAX drum. The motor selection column assumes the use of the ¼-20 threaded rod for the traverse drive, as specified in the original article. The design rpm is the desired traverse motor speed for optimum aspect rotation at the specified drum diameter. The motor selection column represents the closest approximation of this speed that can be obtained from stock motors (Hurst DA series, either 12 or 20 rpm at 60 Hz) operated off the 60 Hz line or the 48 Hz drum amplifier supply. The earth scan width represents the width of the actual earth scan in either the visible light or IR channel, and the picture length is specified on the basis of 10 minutes of a pass using the traverse motor specified in the motor selection column. Note that for drums between 2 and 2.25 inches the image will fit — when properly phased — on a piece of 5x7 inch photographic paper. Larger drums will require 8x10 inch paper if all of the earth scan or at least 10 minutes of the pass are to be displayed.

Construction

The new module for the monitor can be constructed on a small piece of perforated board and mounted wherever convenient for the proper interconnections to the monitor circuit elements.

The connection between IC14 and J4 and IC15 and J5 can be ordinary hookup wire, as can the wiring associated with S4. The connection between the secondary of T1 and J6 and the blanking connection from Q7 to J7A should be made with shielded audio cable, as these are high impedance connections and hum introduced here would appear on the monitor display or FAX printout.

Replace the fixed 470k resistor at the input to the 12AU7 in the lamp driver circuit with a 10k pot. Add a new jack (J7B) on the lamp driver chassis near the 6CL6 and connect this jack to the grid pin of the tube socket as shown in Fig. 3(c). As long as the distance between the jack and the grid pin is no longer than 1-2 inches, ordinary hookup wire may be used. If your chassis layout requires a longer run, use a shielded cable. Label the new jacks as follows: J4 — 48 Hz; J5 — Drum switch; J6 — Video output; J7A and B — Blanking. Shielded audio cables should be used for all connections between the monitor and the various elements of the FAX system.

The major element in the construction of the integrated system is the conversion of the FAX recorder to a 96 rpm format. There are two ways to accomplish this if the recorder has already been constructed for the 48 rpm format. The cheapest alternative, provided you have access to gears, is to install a 1:2 gear system between the traverse motor and the threaded rod and between the drum motor and drum shaft. This will up the drum speed from 48 to 96 rpm and will achieve the required doubling of the traverse rate which is required to preserve the proper aspect ratio at the new drum speed. If you are the mechanical type this is probably the easiest solution, but, if you are like me and abhor mechanical devices, the simplest alternative is to purchase a set of new motors. A Hurst series CA motor rated at 120 rpm at 60 Hz will provide the proper 96 rpm speed when run at 48 Hz. This motor will mount with no fuss on the mounting plate for the original 60 rpm drum motor. As in the original 48 rpm version, the selection of the proper traverse motor is dependent upon the diameter of the drum, if we are to achieve something close to the proper aspect ratio. The original article on the FAX system provided tables for selection of a traverse drive motor based on 48 rpm operation of the drum. Fig. 4 provides the same data for 96 rpm operation. The new motors are drop-in replacements for the types originally specified for 48 rpm service, and no modification of the traverse motor mounting system should be required. You can save some money and frustration caused by back orders if the motors are ordered directly from the Hurst factory. They welcome small orders and will ship immediately from stock even on phone orders. Contact the Hurst Manufacturing Corp., Princeton IN 47670, or call 812-385-2564. They are nice people and it is kind of amazing to run into an outfit that acts as if it wants your business!

Setup and Operation

Obviously if you already have the FAX system going as originally described, your major task will be to build the monitor and get it going. The August, 1975, article in *73* will be your guide here — simply add the module to the circuit during construction. Follow the article for checkout procedures, being careful to keep the new S4 (internal/external triggering) in the internal position for all monitor setup adjustments. Modifying the recorder to 96 rpm is the next task, followed by interconnection of the monitor and FAX systems. Note that the monitor is now performing the functions of the solid state module, as well as providing a display for phasing and video gain adjustments — something that the solid state module did not accomplish. You might as well keep the original solid state module circuit elements on hand, for they are useful in the 96 rpm mode if you farm out either the FAX or monitor and have to run the FAX unit independently.

If you have the monitor on hand and are adding the FAX capability, follow the general description in the original article (except for the substitution of the 120 rpm CA series motor for the drum) and choose your traverse motor from the table in Fig. 4 of this article. You can omit the solid state module unless you wish to have it on hand for possible independent operation of the FAX unit. Proceed with the applicable instructions for checking the mechanical aspects of the FAX recorder and initial setup of the lamp driver and drum amplifier circuits. The following instructions for final setup will be slightly redundant for those stations that already have the FAX system in operation, but are provided for those who are adding FAX

capability for the first time:

(1) Turn on the monitor and set it up for normal NOAA display (the DRIR position).

(2) Apply power to the drum amplifier and lamp driver chassis, making sure that the lamp switch is off.

(3) As the circuit warms up, adjust the input level to the drum amplifier for 120 V ac across the motor windings (the drum should be clipping along if the drum motor switch is in the run position).

(4) Place a voltmeter across the drum reed switch and verify that it is closing once every revolution. If not, adjust its position in relation to the magnet on the drum until it does.

(5) With the FAX drum running, switch S4 to external, and the monitor should now be triggering from the drum.

(6) Play a satellite tape into the monitor and adjust the video gain for best contrast. Phase the picture as usual to verify that phasing operates normally when the display is triggered from the drum.

(7) With the picture being displayed in the normal manner, observe that the picture stays locked horizontally when triggered by the drum. Any tendency of the display to "wander" indicates that the drum is not holding sync. Provided that the mechanical checkout of the drum assembly indicated that the drum was not binding, carefully adjust both the drum amplifier level pot and the bias to the drum amplifier (6DQ5) to eliminate sync instability. The proper drum motor voltage will usually fall somewhere between 90 and 120 V ac. Adjusting the amplifier bias alters the 48 Hz waveform and by working both controls you optimize both waveform and voltage so that the drum will hold sync reliably. Once set, these controls will require no further adjustment.

(8) With the monitor picture showing normal contrast, turn on the lamp switch on the FAX recorder. The meter in the lamp driver circuit should bounce around in response to the video signal, and the lamp brightness should change in response as well.

(9) If you already have experience with the proper levels required for FAX printing, set the new input gain pot on the lamp driver chassis to approximate this proper swing. If in doubt as to the precise level, set it for a bit more current than normal, since you will be printing at a faster drum speed. If you have no previous experience to go by, set the input level pot so that the meter is peaking midway between zero and your black level setting.

(10) Turn off the recorder and look at the current indicator in the lamp driver circuit. It should be flipping back and forth from zero to black level, indicating the proper operation of the line blanking circuit.

If all has gone well to this point, you are ready to print a picture. If you have not already done so, mark a line on the drum to correspond to the position of the light gun when the drum magnet is opposite the reed switch. This line will serve to locate the edge of the paper when it is attached to the drum assembly.

The original article on the FAX system outlined the general requirements for photographic paper, safelights, etc. Extensive experience printing with the 96 rpm FAX system has shown that resin-coated bromide papers (such as Kodak Kodabrome RCM) are ideal. This paper can be handled under dim red safelight illumination and two safelights – one at the operating position for loading paper and watching meters and the other at the processing station – are ideal.

Under safelight illumination, mount a piece of photographic paper on the drum using doublestick tape. Position one edge of the paper parallel to the line you have marked on the drum. Fire up the monitor and FAX system and set S4 to external. Play the satellite tape through the monitor and phase the

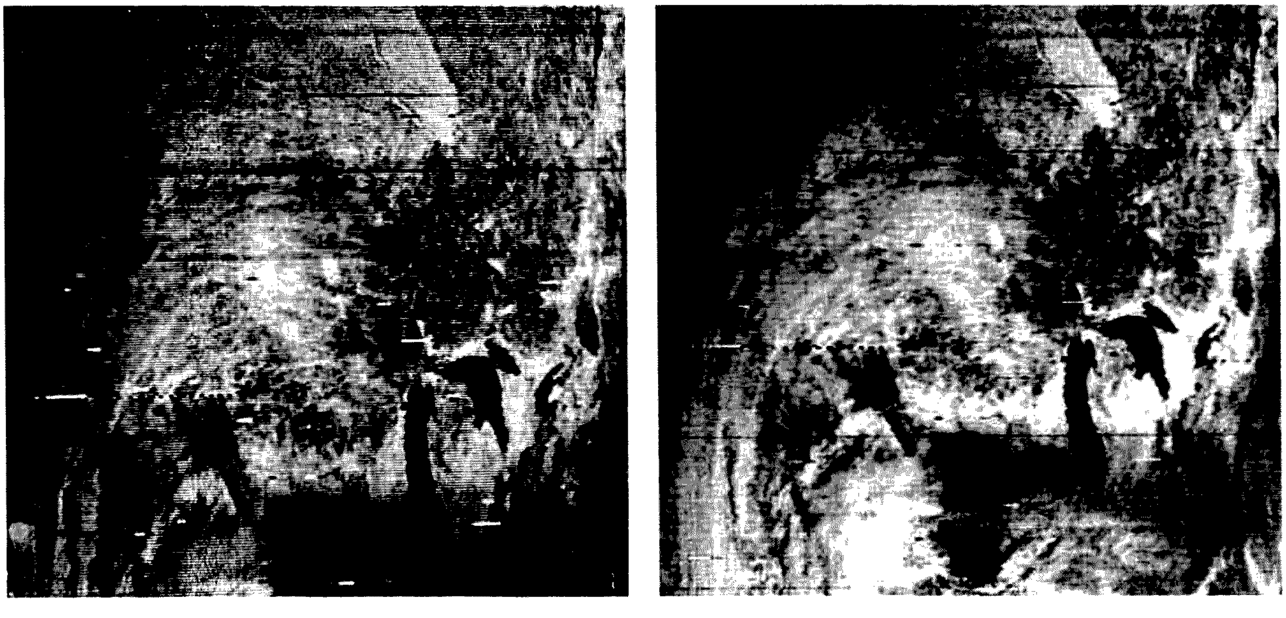

Fig. 5. Examples of simultaneous monitor and FAX readout from a NOAA 4 satellite pass across the central United States. The monitor picture is on the left and the corresponding segment of the FAX readout is on the right. The monitor, in addition to providing control of the FAX element of the system, also provides a negative that can later be printed in any size format. The FAX printout provides a high resolution picture of the entire pass, which can be used for immediate evaluation of cloud cover. The monitor also provides for picture readout in other modes that are not compatible with the NOAA FAX recorder.

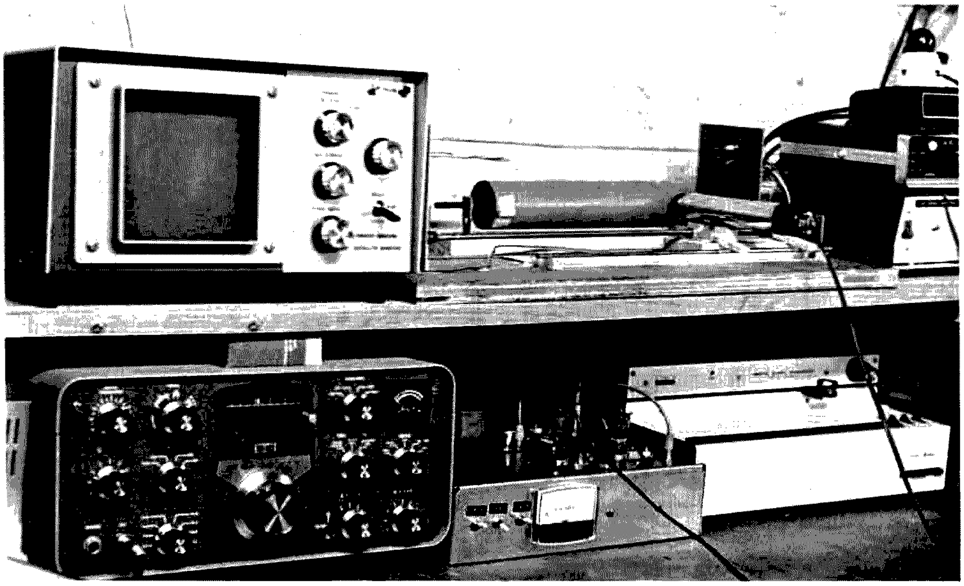

Fig. 6. The author's satellite station, where the monitor (upper right) and FAX display systems are integrated into a single display system. The actual FAX recorder is on the upper shelf to the right of the monitor. The lamp driver and drum amplifier circuits are on the chassis on the lower shelf next to the SB102. To the right of this chassis is a chart recorder (Heathkit), which records satellite signal levels during unattended station operation.

picture. Close the lamp switch in the FAX circuit and start the traverse motor. As the picture is printing on the FAX recorder, you can watch it or even photograph it from the monitor display. When the vertical scanning reaches the bottom of the monitor screen there should still be unexposed paper on the FAX drum, so simply recycle the vertical sweep and continue to watch the display until your recording is finished or until you run out of paper on the drum. Notice that any abnormality in the operation of the drum will be immediately apparent on the monitor display, which saves you the wait until the end of the recording (plus processing time) to discover that the system has glitched.

When the pass is finished, process the paper, and you should see the facsimile version of the picture you saw on the monitor. If the FAX print is too dark after normal processing, increase the gain at the input of the lamp driver. If it is too light, decrease the gain slightly. Eventually you will arrive at a setting of the gain pot where the picture on the print matches the monitor display – at which point you should resist any further urge to tinker with it!

Fig. 5 shows a comparison of simultaneous monitor and FAX display from a NOAA 4 satellite pass. Fig. 6 shows my own equipment set up for operation. Normally I use the FAX print for immediate evaluation of cloud cover, and take photos of the monitor readout to provide negatives for the file. These file negatives can be used to reproduce pictures in any size format. The monitor is also used to display APT WEFAX pictures from the ATS satellites, a mode that is not compatible with the NOAA FAX recorder.

Although having both CRT and FAX readout may sound like an extravagance, the monetary investment in the two readout devices is actually considerably less than having a monitor and camera for SSTV operation, for example. Like everything else, if you are hung up on a particular mode of operation you eventually reach the point where it is simply not enough to just operate that mode – you want flexibility and convenience as well. If you intend to occasionally read out a satellite picture, then the monitor with its multimode capability is the route to go. If you simply want to watch NOAA satellite readout and have a scope available for phasing, then the simple FAX system will do. As noted in the original article, a 48 rpm system can even be operated without phasing! The best FAX option of all is the 96 rpm format and, even if you do not intend to use a monitor, this article provides the needed design data for this mode of operation. If you find yourself dedicated to weather satellite activities of all sorts, you had better file this article with the data on the monitor and FAX system – you are likely to find that you ultimately will want to go the whole route! ■

by Wayne Green W2NSD/1

I/O EDITORIAL

THE EDITORIAL DILEMMA

A letter from Donald Peasley of Wrightwood, California is typical of perhaps a dozen letters so far received. I realize that this is a matter of importance to possibly as much as half of the *73* readers, so it is not something to be swept lightly under the table.

I held a Novice and Technician ticket in 1968 but wasn't active because of other interests taking more of my time. Last year I again became interested in amateur radio and decided the best way to become informed and renew my interest and knowledge was to subscribe to a radio magazine. I chose 73 because a ham friend recommended it over other magazines. Well, I did subscribe, but in the short year that I have received it, the magazine seems no longer interested in new radio hams, because of the type of articles. Also, the whole magazine is rapidly becoming a computer book. The number of articles on computers, etc., is overshadowing the articles touching on ham radio (Aug 76 issue: 12 computer articles, 8 radio-oriented articles). The way I see it is that the computer magazine "Byte" wasn't successful, but you still feel you have to push it on other people, so you add one more computer article each issue. Soon 73 will no longer be able to be called an amateur radio magazine, but a computer magazine. WHY? Just like a smoker forces his habit on non-smokers by blowing his fumes around, why must an editor of a magazine use his power to influence a magazine since he is hung up on this particular phase of electronics? Can't you be convinced after one computer magazine didn't make it that all aren't that hooked on computers? Please give 73 back to amateur (ham) radio subscribers and let the computer experts get their information from other sources.

I would be most surprised and pleased if the next issue of 73 I received did not have a computer section. I would rather see a section for potential ham operators and those hams not 25 years in the hobby — something a newcomer or potential ham would understand and help them to become more entranced with ham radio. Let's not scare everyone away with all your computer articles, but give the magazine back to amateur radio as it was originally intended.

Donald Peasley
Wrightwood CA

There are several points that deserve answers. Firstly, I agree with Don that there have not been enough articles of value to the newcomer in *73*. I've written some editorials asking for such articles to be written, and a few have shown up, but all too few. I'd like to see four or five good articles for Novices in each issue . . . articles on how to get higher grade licenses, how to pick a rig to use with the new rules, how to work DX, what kind of antennas to put up, what activities are available for the newcomer in the way of traffic nets, certificates, etc. I can get CBers to take a look at *73*, but if there is nothing in the magazine which will inspire them or help them get a ham ticket, both *73* and amateur radio are the losers.

Okay, now about computers. Yes, there have been a number of articles in *73* on the subject . . . most of them very much ham-oriented, but a few were just general theory to help amateurs understand the fundamentals of this new field. Since microprocessors are going to be built into more and more ham gear, I would be doing the readers a terrible disservice if I were not to publish enough articles to allow them to keep up with this fantastic development. I recognize that there is a strong temptation to bury one's head in the sand and hope that large scale integration will go away. Microprocessors are here and they are going to grow on us, no matter how wistfully we look back on the good old tube days.

It is interesting to note that despite the incredible growth of the computer hobby field, almost all of the serious microcomputer applications have been in amateur radio. Ask any ham who has attended a convention or big hamfest this last year which of the exhibit booths were the most crowded . . . and you'll learn it was the computer exhibits.

As far as *Byte* magazine goes, to the best of my knowledge it is doing okay. I note that other hobby computing magazines seem to be prospering . . . *Interface, Microtreck* is due to come out soon, *Megabyte* is rumored to be starting soon, *Kilobyte* (tentative name) is scheduled for debut this fall. To say that I have no connection with *Byte* is an understatement . . . note the article in the latest *Byte* extolling *CQ*'s virtues and trying to pretend that *73* doesn't exist. No, *Byte* was most successful . . . my estimate is that it was worth about $500,000 or so not long after I started publishing it.

There will be less computer material in *73*, but probably not for the reasons you might think. Firstly, it is darned difficult to get good fundamental articles for the magazine . . . there are too few people who know the subject well enough to write. Then, with our starting another computer hobby magazine this fall, there just won't be that much left for *73*. We'll continue to run as much ham-oriented uP material as we can, but unless there is a big change, there won't be as much as I think we should have.

Hams getting interested in uP would do well to look at the computer hobby magazines since uP and hamming are firmly entwined. The nice thing is that once you have a microcomputer, you cannot only use it to do all sorts of things with your ham station, but it will also play games, run a small business, or do almost anything else you can imagine. *Kilobyte* promises to have a lot of ham/computer articles.

One more thing, Don . . . the great bulk of the mail coming in has been very enthusiastic about the I/O section of *73*, so I don't know how much of a body of the readership you represent. Articles like that one by Don Alexander in August are a lesson to all old-timers who are afraid of ICs.

I can sympathize with anyone who finds microprocessors a bit frightening. Not only is this new subject a complex one, but the information is very difficult to get in any easy to understand form . . . which is why I've been trying to get articles . . . and why I started *Byte* last year. Heck, I still can't understand many of the uP ads. How these firms are able to sell anything at all is a mystery to me. I've read and talked enough about computers now so I understand the fundamentals . . . RAMs, ROMs, CPUs and such . . . I've even put a computer system together and got it working . . . still I'm lost when it comes to trying to figure out what some manufacturers are actually selling, what it will do and what else I need with it or will work with it.

To sum up . . . we do need articles for ham beginners . . . and we need material for computer/ham beginners. How about it?

10,000 MILES

A year ago I made a trip to visit the manufacturers of hobby computers and reported in *73* on my findings. At that time there were three . . . MITS, Sphere and Southwest Technical Products.

The field has grown a bit during the last year and it seemed like a good idea to update my visit exactly one year later . . . this time with a visit to MITS, Sphere, Southwest Tech . . . plus Jolt, Imsai, Apple, M&R, Godbout, Morrow, Wave Mate, and Intelligent Systems. It was a most interesting trip.

The manufacturers of hobby computers come in all sizes, from great big plants down to a corner of a garage. My reception ranged from the most formal of interviews and a refusal to let me take pictures at Imsai to a flight up to Santa Rosa for dinner by Godbout and an all-day rag chew with Ed Roberts of MITS, complete with some looks at his most tightly guarded developments.

The increasing number of ham applications for computers had gotten to Ed Roberts, and he was hard at work to get his ham ticket . . . look for him soon on 20m doing some DXing and undoubtedly in there with RTTY, computer assisted. Not a few of the computer hobbyists are getting into hamming these days.

One of the newest of computer firms is Apple. This is run by two youngsters (maybe 20?) out of one end of a garage in Los Altos. Despite the humble facilities, the system they've created is worthy of serious consideration and I'll be covering it in some depth in *Kilobyte Magazine*. Their main efforts, at the time of my visit, were on the development of programs for the system. This was about the same for almost all of the firms I visited.

CB activity in the Western reaches is much less than I expected. And though I had two meters with me too . . . and made a lot of fine contacts . . . I found CB invaluable for finding my way around strange places and avoiding traffic problems.

Jolt has a very interesting computer setup . . . a most interesting design . . . and I suspect that it is only a lack of general knowledge about it that has kept their sales down. I really can't put them down for that, since I honestly can't point at any manufacturer in the whole industry who has literature which is aimed at what I see as the main market for this equipment . . . the beginner. I wouldn't be surprised if the first firm to come out with really easy to understand literature might not find themselves in a runaway situation, trying to keep up with the flood of orders. There are an awful lot of people out there who think they want a computer, but who are unable to figure out what system they need . . . or how much it will cost. And a lot of people get mulish when faced with signing a blank check.

You'll be seeing a lot more about the Astral 2000 system . . . M&R . . .

Continued on page 187

by John Craig

I/O REPORT

I/O HELP

Received an interesting letter from Kenyon Karl in which he suggested we start an I/O Help column in the I/O section to complement the Ham Help column. He would like to get the ball rolling with this entry: "I can help with the writing and debugging of BASIC programs for your microprocessor system. I write COBOL programs (another high-level language . . . but for larger machines) for a living." – Kenyon F. Karl, 36 Prospect Street, Waterville ME 04901.

THE HOMEBREW COMPUTER CLUB

I recently made a run up to the San Francisco area to check on the Homebrew Computer Club. Not only are they a dedicated bunch (they meet twice a month) but they also have some of the sharpest talent in the country (which stands to reason since they're right in the heart of the "Silicon Valley"). The meetings are held at the Stanford Linear Accelerator Center. Stanford has a "no selling" policy, so there were about half a dozen systems set up for demonstration only (which precludes the flea market seen at most other club meetings). The iron hand of Lee Felsenstein (designer of the Pennywhistle Modem and other goodies) conducts the meetings . . . and with over 300 people in a room it helps to have someone keep things under control! One of the most interesting aspects of the meeting came when adjournment was announced. About two hundred fanatics rushed the podium to get first grabs at the stacks of pamphlets, data sheets, product descriptions, and flyers which were placed on the stage. (For an anxious moment I thought Felsenstein was about to meet his Maker!)

Marty Spergel of M & R Enterprises gave me a tour of his new baby, the Astral 2000. The Astral is a 6800-based system which has some really fantastic hardware features and powerful software to make it more than "just another computer coming on the scene." We should be getting one of these units for evaluation in the near future, so keep your eyes open for the write-up . . . it should be a corker!

Another system which has a high interest level among hobbyists is the PACER, built around National Semiconductor's PACE. Project Support Engineering of Sunnyvale, California, had their PACER doing its thing at the Homebrew meeting. I expressed an interest in doing an evaluation of the unit and they responded by sending me one within two weeks. It's sitting across the room waiting for me. We'll have a New Products write-up on it soon and give you some thoughts on the processing power of a 16-bit machine (versus the 8 bits we're used to).

RAP SESSIONS

While up in San Francisco I also had the opportunity to sit down and do some elbow-bending and jawboning with Jim Warren (of *Dr. Dobb's Journal*) and Bob Reiling (Homebrew newsletter editor). I also had a visit for an entire afternoon from Sheila Clark and Art Childs (editor and ex-editor of *Interface*, respectively). One of the common denominators of these conversations was the common agreement that the direction of home computer systems will be towards entertainment and education applications, with very little emphasis on exotic control applications (turning on the sprinklers, monitoring the environment, security systems, etc.) that we've heard so much about. The amount of hardware (and hardware expertise) to implement a 24-hour monitoring system would be considerable. Then, of course, the amount of electricity such an application would require would be something to consider. If these control applications are going to be handled by a computer they will have to be accomplished using a dedicated microprocessor-based controller.

FURTHER REFLECTIONS ON SMALL BUSINESS SYSTEMS

In last month's I/O Report, I mentioned the possibility of putting together a "dumb" key-to-tape data entry terminal which could be used for storing data and transactions on a cassette. The cassette would then be picked up (each evening) for processing at a central computer (the one in your home). Another important capability a small business would require would be the ability to retrieve data during the day (e.g., if a customer calls up and asks what his balance is, the secretary should be able to walk over to the terminal and get the information . . . rather than having to look it up in the files). Therefore, it's beginning to look more and more as though a "smart" terminal (one which contains a microprocessor) will be the answer for an application such as the one I've described.

I'm presently putting together a talk for a seminar at the Personal Computing '76 convention in Atlantic City. The seminar will be entitled, "The Outlook For Low Cost Small Business Systems," and it looks as though I'll have to emphasize what the future holds for small business systems, rather than what the present has to offer. It seems that there are several people working on the development of these systems around the country, but everyone is in the same boat . . . he has the hardware but the software is still a gleam in his eyes. There's an awful lot of it to be developed. The whole thing needs to be developed around a "people-oriented" executive program which will accept commands from the operator and run the other programs which make up the system. These other programs would include inventory control, accounts receivable, payroll, customer mailing lists, and text editing for generation of letters, just to name a few.

It occurs to me that the possibility exists for development of this software by several groups or individuals scattered across the country. If modular programming techniques were employed, and the developers were to agree upon the structure and commands of that executive program, it would seem that the individual programs could be integrated into a whole system. The only reason I even bring up such an idea is to help reduce the cost of software development – and thereby sell systems that cost less. (If I were a programmer and had just finished a year and a half developing all of those programs mentioned above, I certainly wouldn't want that software sold for anything less than a large chunk of money.) I'm fully aware of the fact that such an undertaking would require a certain amount of coordination and leadership from the person (or persons) "in charge" of the effort. If that person (whoever he is) wrote an article detailing the plan, he could probably get enough of a response from interested programmers to turn the thing into a reality.

CORRECTIONS AND ADDITIONS

Dick Whipple and John Arnold have discovered a couple of minor corrections to be brought to your attention regarding their "Baudot Monitor/Editor System" in the August issue: 1) In the fifth paragraph from the end, the output routine address should have been 001215 instead of 001205 (the address of the output routine shown in Table 4 is correct). 2) Location 000104 should be changed from 215 to 320 octal (as it was, a "?" would be printed in the wrong case when an unknown command was entered).

Dick reports that he is getting a steady stream of orders and inquiries concerning the BM/E article. Several people have called long distance to talk with him about it, and it appears interest among hams is beginning to pick up. His next article, on the amateur version of Tiny BASIC Extended, will be coming up in the near future.

We've received several comments on the fact that the listings for the PROM were not included in the article on "A Morse to RTTY Converter" by WB6SQU in the June issue. We have a policy here at *73* to make every attempt to insure that construction articles are complete. Therefore, you'll find a copy of those listings in this column. Stanley Levy WB6SQU was kind enough to make them available, but he also pointed out that a number of people have purchased the listings (as per the article) for $3.50. If you're a member of this group, *73* will be happy to give you a *$4.00* credit toward the purchase of any *73* publications, cassettes, or subscriptions (just send us a receipt or copy of your cancelled check). Incidentally, the new address of Levy Associates is PO Box 514, Monrovia CA 91016.

ON-LINE

Many moons ago when I was involved with the *Micro-Eight Newsletter*, I did a short write-up on a newsletter just coming on the scene called *On-Line*. With the passage of time, it turned out to be one of those things which fall by the wayside, and I never got a subscription. The other day I received a complimentary issue and now see what I've been missing. It's neat!

Each issue of *On-Line* contains 6 to 12 pages of classified advertisements devoted entirely to the computer hobbyist. It looks like a pretty good way to pick up or sell used gear. And a dollar for four issues is quite reasonable. Contact D. H. Beetle, Publisher, 24695 Santa Cruz Hwy., Los Gatos CA 95030, if you're interested.

MORSE CODE-TO-BAUDOT PROM LISTINGS

Following are listings for the PROM mentioned in "A Morse to RTTY Converter" (June, *73*). Stan Levy WB6SQU pointed out that the listed addresses are "system addresses" (i.e., used during development) and correspond to locations 000 through 1FF in the PROM. The addresses within the program do not need to be changed, since the PROM is addressed by only the nine least significant

Continued on page 177

Ham Time-Sharing is Here for You!

-- via a repeater

Bruce J. Brown WB4YTU/WA9GVK
4801 Kenmore Avenue #1022
Alexandria VA 22304

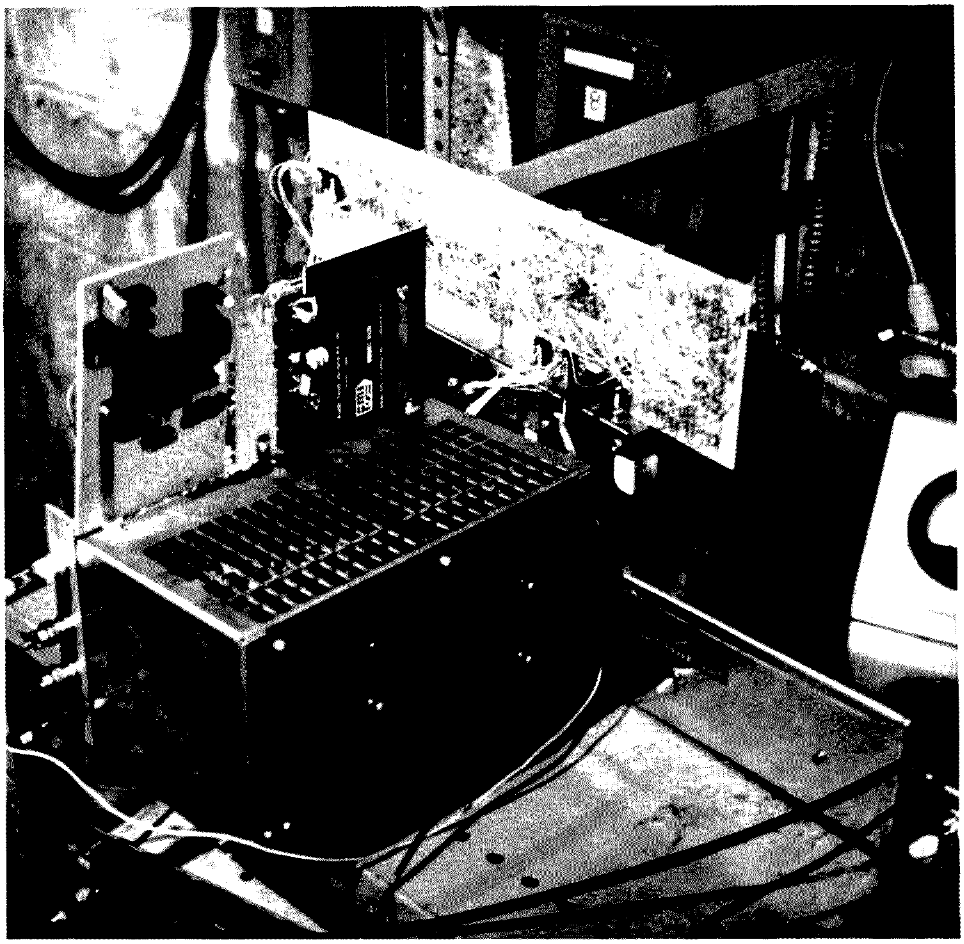

Microprocessor, demodulator, A-D converter, and character generator — the ingredients of RTACS at the WR4AAG ATV repeater.

Numerous magazine articles and symposium speakers have extolled the possible virtues of microprocessors in amateur radio applications. This plethora of prognostication, while generating considerable interest, has created a great deal of skepticism as well. After all, amateurs, being pragmatic by

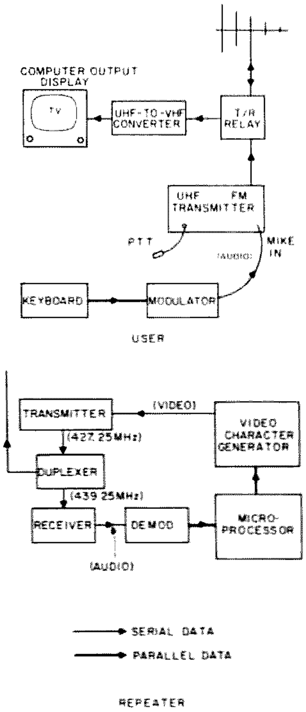

Fig. 1. Remote Terminal Access Computer System.

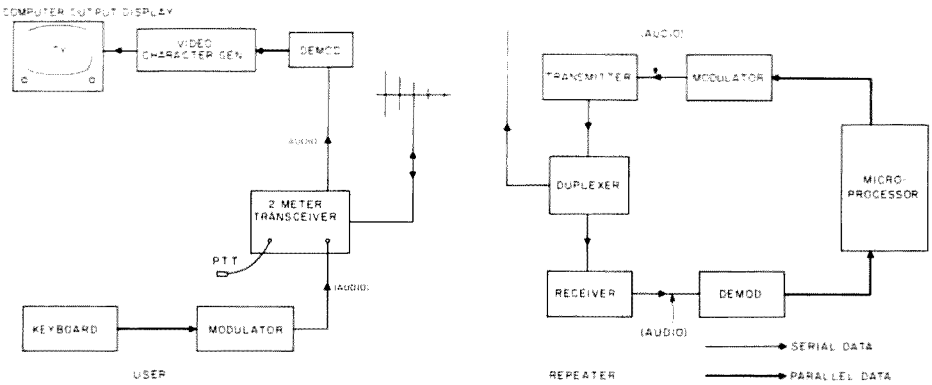

Fig. 2. Possible remote terminal system for voice-only repeaters.

nature, are more concerned with the realities of the present than the possibilities of the future. Few hams relish the thought of spending $1000 on a computer system which might ultimately serve, at best, as a light-blinking toy rather than as the useful station addition originally intended.

The purpose of this article is to affirm the present value of microprocessors in amateur radio, while demonstrating that their benefits can be reaped without undue individual expense. This will be shown by describing a unique computer-based system which has been operating successfully for well over a year in the Washington, D.C., area.

In early 1974, members of the Metrovision Amateur Television Club, sponsors of the first fast scan TV repeater (WR4AAG), recognized the potential power of recently introduced microprocessor chips and set out to design a far-reaching computer system to enhance amateur station performance both technically and operationally. The concept was to give numerous local hams computer capability at their own shacks through the use of a single, shared, centrally-located processor. Thus each station would be spared the expense of building or buying a separate computer. Furthermore, it was envisaged that the remote nature of the system could provide capabilities that even the most complex home-based computer could not render.

What is this super-system? It's called a Remote Terminal Access Computer System (RTACS), and is used as an integral part of a repeater.

Writing and executing computer programs from the comfort of your shack is just one basic capability. The system will also measure your signal strength into the repeater, power output from the repeater, automatically call CQ for you, store and forward messages to other amateurs, and serve as an information retrieval library. Let's take a look at the system configuration.

RTACS – General Background

The system is similar to commercial time-share computer networks using terminals at a location remote from the processor. You may already have some experience with remote terminals at work or school. Fig. 1 shows the amateur radio implementation of this approach, using a TV repeater.

At the home QTH, the user requires only a keyboard and modulator to convert the parallel keyboard data into a serial, tone-modulated signal which is applied to the microphone input of an existing transmitter.

The signal is sent up to the repeater, where it is received, converted back to parallel data and fed into a microcomputer. At the WR4AAG repeater, a home brew 8008-based processor is employed with 2K RAM and 2K PROM. The output of the computer is fed into a character generator, which formats the data into a standard 525 line video signal that is transmitted back to the user and displayed on a home TV set through a UHF-to-VHF converter modified for ATV (amateur television) reception.

It is thus possible for a ham to have computer capability in the home without the hassle of constructing or buying a processor and video display device – an investment easily amounting to several months of effort at a $1000 price tag. With RTACS it is possible to write programs, list data out of memory, and execute programs. It is invaluable as a learning aid for machine/assembly language programming, as well as for performing a myriad of beneficial tasks in direct support of amateur radio operations.

So as not to give the impression that RTACS is the greatest thing since the invention of the carbon resistor, it is fair to point out some inherent drawbacks. First, only one user at a time is possible. Common on-the-air courtesy dictates who uses it and for how long. Secondly, there is no security to your data. Everyone can see your inputs and outputs (if that's any concern to you). Finally, the system, as presently configured, precludes its use for direct control or switching applications around the home, as would be possible with a locally based device. Nevertheless, the simplicity and cost benefits outweigh the disadvantages in most instances.

When operating a computer remotely, some provision must be incorporated to allow the terminal user to restart the processor in the

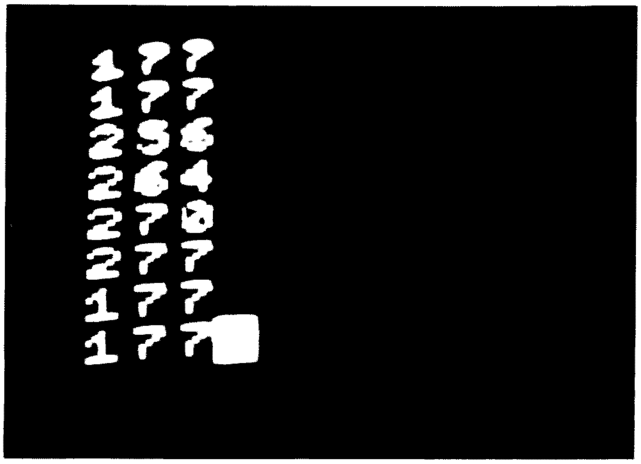

Fig. 3. Signal strength samples at 2 second intervals. No signal reads 177. Display shows transmitter turn-on, gradual increase in signal, followed by turn-off.

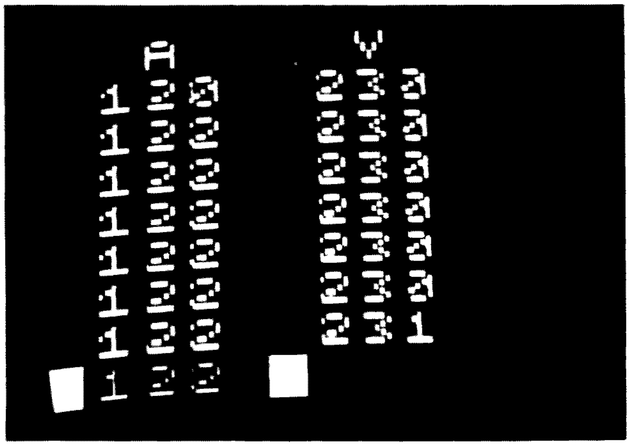

Fig. 4. Audio and video transmitter power levels in left and right columns, respectively. Samples at 2 second intervals. A separate calibration table is used to convert these numbers directly into Watts; e.g., 122 corresponds to 10 Watts, and 230 equals 80 Watts.

event of a software problem such as a loop or a halt. At the WR4AAG repeater, a hardware circuit monitors the output of the demodulator to sense a specific control character. Upon its detection, the circuit sends a 005 interrupt command to the 8008 processor, to override any other instruction that may be executing.

While the video output capability of the ATV repeater does conveniently lend itself to the RTACS, a standard voice-only repeater can be used. Fig. 2 shows one possible method for doing this. At the user station, a keyboard and modulator are also used. At the repeater, the character generator is replaced by a modulator to convert the parallel output data from the computer into serialized tones. On the receive side, the user would have a demodulator to convert the tones to parallel data for driving a local character generator. Thus, from the home QTH side, an additional \$150 investment for a demodulator and character generator is required, as compared to the ATV repeater configuration. Another difference would be in the computer's control program which must prevent computer output from being transmitted until the user drops his/her carrier to enable reception of the data. This would not be required if the user can operate full duplex.

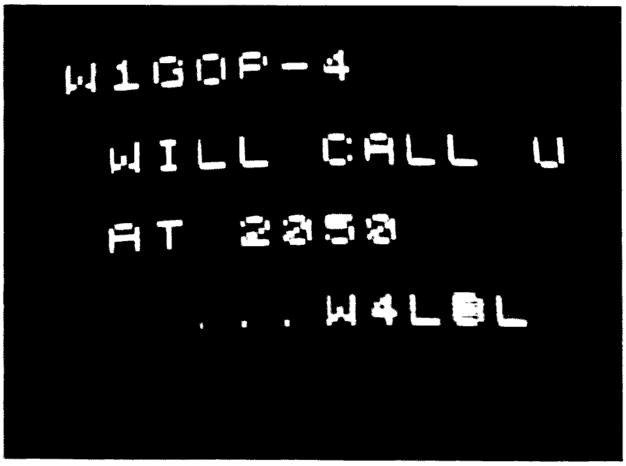

Fig. 5. Messages may be stored in the computer and later recalled by the intended recipient.

Some specific applications of the system used at the WR4AAG repeater will now be examined.

Remote Signal Strength Measuring Program

Ever wonder how strong your signal is compared to others? Would you like to measure antenna performance even though you don't own a field strength meter? Want to know if your transmitter is tuned up for greatest output power but don't have a wattmeter? Are you interested in knowing how day-to-day propagation changes affect your signal?

Amazingly, without any test equipment, you can determine all of the above with the RTACS. To call up this special program, you turn on your modulator and type the letters S-I-G-N-A-L on the keyboard.

While monitoring the output of the repeater, a 3 digit number will be seen on the left side of the TV screen. This number is directly proportional to your signal strength as sensed by the repeater's receiver. If you increase transmitter power, the number will increase in value; if you change to a lower gain antenna, the number will drop. Thus you get an objective figure of merit for your signal strength. No more inaccurate RS reports!

How does it work? An analog-to-digital converter is connected to the repeater TV receiver's AGC line. The A-D converter's digital output is fed into the microprocessor which, in turn, is connected to a video character generator tied to the repeater transmitter. Thus, a number is generated and displayed in a TV format which is directly proportional to received signal level. (A sample of this printout is shown in Fig. 3.)

Typical applications of the system are:

1. Accurate transmitter tune-up
2. Comparing transmitters
3. Measuring performance of transmission lines
4. Comparing antennas
5. Examining antenna pattern (sidelobe, F/B ratio, etc.)
6. Proper antenna positioning (azimuth, elevation, polarization)

Power Meter

Many times the question arises, "Is my receiver bad or is the power output of the repeater low?" Thanks to the microprocessor, the answer can quickly be found. By calling up the POWER program on the keyboard, the power output levels of the repeater's video and audio transmitters are given. The numbers that appear on the screen, while not in Watts, do directly correspond to a specific power level that can be determined by referring to a calibration table. (See Fig. 4.)

How does the system work? The detected rf output from the aural and video transmitters, derived from directional couplers with diode detectors, is fed into an A-to-D converter and on into an input port of the microprocessor. The microcomputer then formats the data into columns which are appropriately labeled.

Message Store and Forward

In this mode the user is able to remotely control the character generator at the repeater to place any desired message on the TV screen. The message may be in the form of a club bulletin or possibly be directed to a single individual. It is especially useful for leaving a message for a fellow amateur who is not home but can later turn on the TV and retrieve messages addressed to him. Several variations of this capability are provided to the

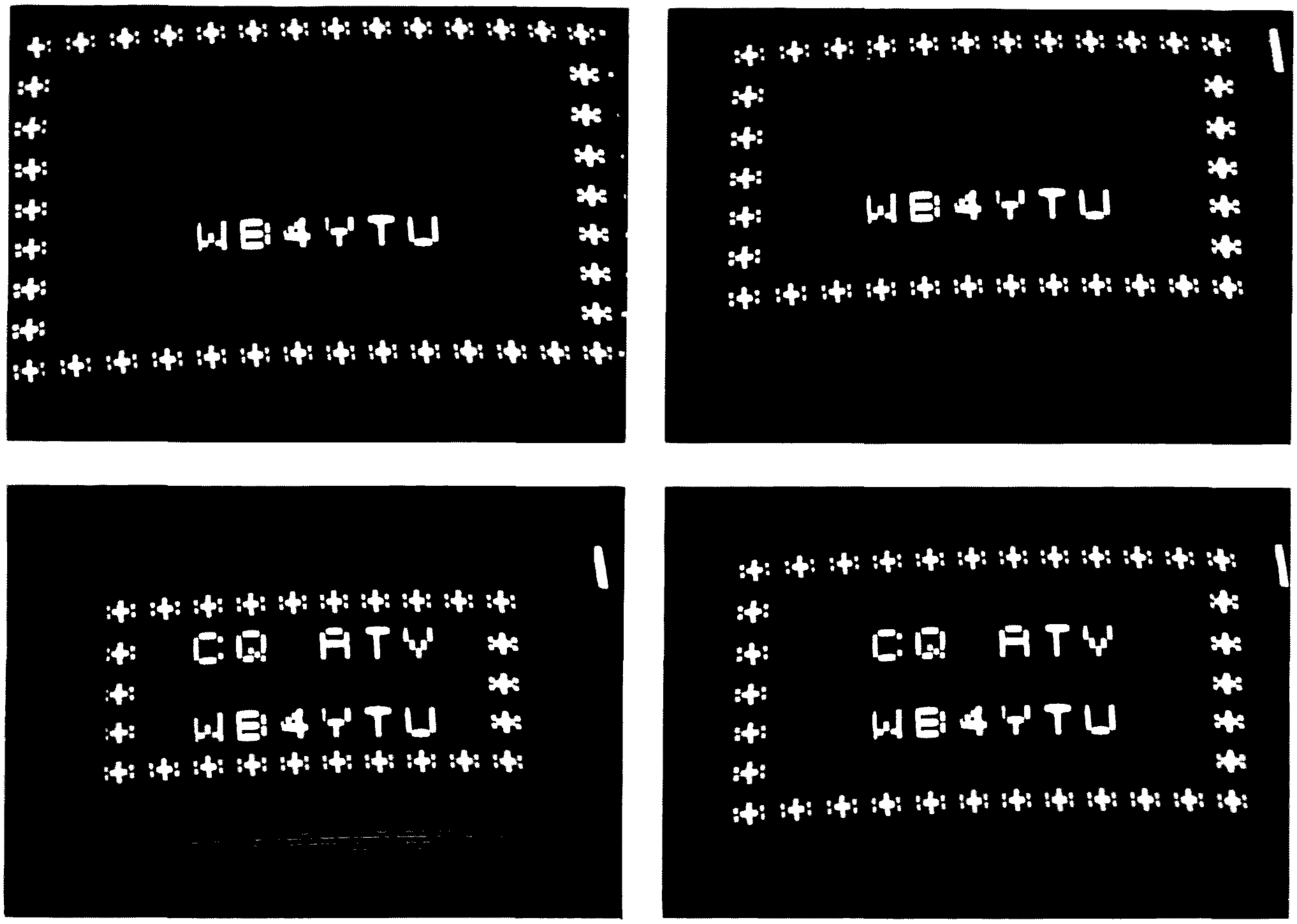

Fig. 6. Computer generates four "pages" of data in the character generator's buffer memory and then turns each page every 0.2 seconds for animation. In the display shown, "CQ ATV" will flash and the outside border will appear to expand and contract.

user. Fig. 5 illustrates a sample printout. Messages can be transistory (stored only in the buffer of the character generator) or can be made more permanent by storage in the computer's random access memory (RAM).

Automatic CQer

By typing the CQer command followed by your call letters, the microprocessor will generate an animated video CQ display. It does this by loading 4 pages of the character generator buffer memory and then turning the pages at high speed to create animation. The photos in Fig. 6 illustrate how this technique serves as a real "attention getter."

Data Retrieval

Several applications are possible involving the storage and selected recall of data. Call letters, addresses and dates can be entered into the computer's memory to serve as a paperless logbook. Once the information has been entered, a keyword can then be typed to retrieve desired information. For example, on the WR4AAG system, by typing call letters on the keyboard, the computer will tell you the person's handle, address and telephone number within 1 second — considerably faster than trying to look it up in a logbook or directory. Other uses include displaying pre-stored propagation or Oscar orbital information. The main limitation of all of these applications is in the size of the memory. An audio cassette tape recorder is an excellent low cost means to achieve the bulk storage of data for this purpose.

In Closing

You can now see how the microprocessor is presently employed in a practical role to assist amateur operations, and that these applications far transcend those possible using only random logic. Needless to say, *73* readers will be able to think of even more spectacular uses for the microprocessor in ham radio. ■

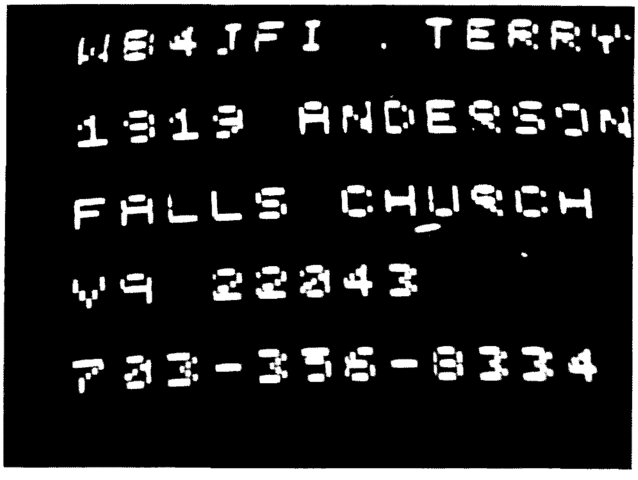

Fig. 7. After typing call letters on the keyboard, the computer will retrieve a corresponding name, address and phone number.

The Soft Art of Programming

-- part II

Rich Didday
1218 Broadway
Santa Cruz CA 95062

What next? You've probably spent a fair amount of time playing around with your home computer system by now. You've gotten familiar with the features and basic elements of your programming language. You've copied some game programs and written some small, fun programs of your own. Maybe it's time to take the big plunge and try something "real," something you couldn't do just as well on a pocket calculator or by counting on your fingers.

In this article (and in the concluding part next month) I'm going to take you through the thought processes involved in defining, designing, refining, and coding a program which allows the user to store and manipulate a large file of information – a "data bank" of sorts. The goal is much more than just laying a program listing in front of you and saying, "Here it is, here's how to use it, copy it if you want." I hope to give you a feeling for *doing* programming and the confidence to try it yourself. That means we're not just going to zip smoothly along from problem statement to finished program. No, we're going to make a plan, start following it, stumble upon unforeseen problems, revise our plan, start in again, etc., etc. Programming can be frustrating at times, but it is also really exciting. It's like any other creative activity – there's no magic way to leap to a finished product without going through a struggle. Incidentally, although our path may be a little rocky, there *are* a number of ideas and techniques we'll come across which are valuable in many cases even if some of them ultimately fail in this specific problem.

Here's the problem we'll work on: Our local computer club has been growing so fast that we're having trouble keeping track of the membership records. How can we use our computer to help us?

In designing any program, the first thing to do is calmly and carefully figure out exactly what it is we want it to do. We don't want to spend days slaving over a hot teletypewriter only to discover that our finished program is inadequate, inconvenient, or irritating for the user to interact with.

Up to now, our club has used a 3x5 index card for each member, and we've listed a number of things on each card:

1. member's name
2. mailing address
3. dues paid until ____
4. type of system ("Altair 8800," "Sphere 320," "homebrew F-8," "none," etc.)
5. wants to be on mailing list ("yes" or "no")

There are three different things we do with the records. For each new member, we make a new card and insert it. We update the information on specific cards (when a member gets a new system, pays dues, . . .). We go through the whole stack of cards and pull out certain ones to do mailings (for example, every few months we go through and pull all the cards of people who need to be reminded to cough up more dues). See Table 1.

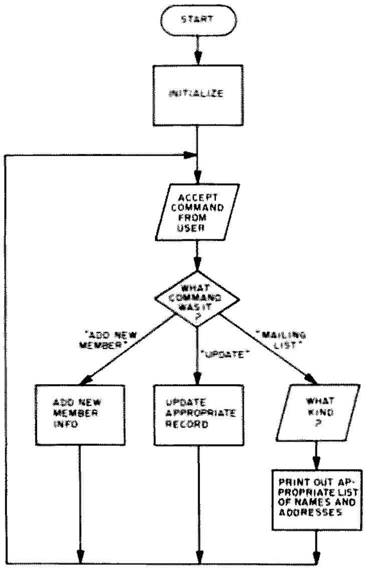

Fig. 1.

As we think about creating our program, we'll keep the different uses in mind to be sure they can all be done

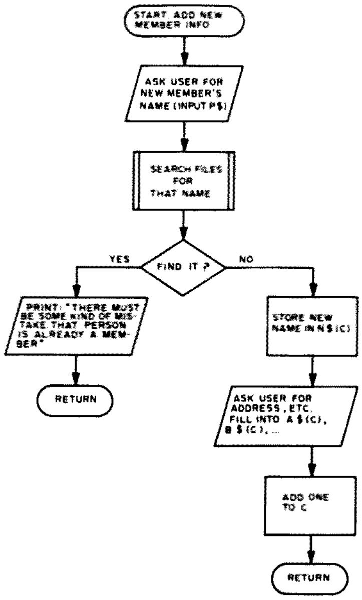

Fig. 2

conveniently. Since the way we store each member's data will affect how we access it, the first thing to do is to decide what memory organization to use. That is, we should design a *data structure*, one that is general and flexible enough for our purposes.

The simplest data structure that's made up of more than one memory word is the *array*. Arrays have been used as data structures from the very beginning of computing, and form the basis for the more elaborate organizations (stacks, lists, strings, etc.) that have evolved through the years.

An array-type organization is perfectly suited to our application because we have a large number of identically shaped items (the membership records) to store. Exactly how we use arrays to store the individual records depends to some extent on the details of the language being used.

I'll assume we have the features of Altair 8K Basic, and suggest what to do if you don't.

What we can do is declare an array for each different type of information we need to store, and associate (in our minds and in our program) the values which appear at the same location in the different arrays.

```
60  DIM N$(100),A$(100),B$(100),D$(100),S$(100),L$(100)
70  REM  N$(I) IS THE MEMBER'S NAME
80  REM  A$(I) IS THE MEMBER'S STREET ADDRESS
90  REM  B$(I) GIVES THE CITY, STATE, ZIP
100 REM  D$(I) IS THE DUES EXPIRATION DATE
110 REM  S$(I) DESCRIBES THE MEMBER'S SYSTEM
120 REM  L$(I) IS "YES" IF THE MEMBER WANTS
130 REM          ON THE MAILING LIST
```

The value for "I" will correspond to the position in the array of that particular data. To store the required information about member number 12, we could use assignment statements (LET statements) like these:

```
LET N$(12)="RAYMOND LANGSFORD"
LET A$(12)="320 FENNLY DR. #256A"
LET B$(12)="LA CERVEZA CA 92018"
LET D$(12)="JUNE,1978"
LET S$(12)="HOME BREW 8008"
LET L$(12)="NO"
```

In our final program, though, we'll use INPUT statements to request the information from the user instead of using assignment statements. After a number of records have been stored, the arrays will look something like Table 3.

Now that we've chosen a way to store our data, it's fairly obvious what the routines which maintain and access the file will have to do. We'll keep track of how many members we have so far (0 to begin with, 6 in Table 3); then if we want to add a new member's record, we fill the information into the next available array location and add one to the number of members. To update a member's record, we start at array location 0, and see if N$(0) is the member we're looking for. If not, we look at N$(1); if that's not it, we look at N$(2), etc. Eventually we'll come to the right place and make the desired change. To generate a mailing list, we go through the arrays one member at a time, printing out the names and addresses of those who meet the criterion (either having a "YES" in their L$ field, or owing dues soon, or having a certain kind of system).

Looking over things so far, we might feel pretty good. All our desired functions seem possible, even fairly easy, to program. We might even pride ourselves on the fact that if a member discovers that we have an error in his or her data, we have an easy way to correct it – by using the update feature. (For some insane mysterious reason, some commercial data gathering organizations don't seem to cope with this problem very well.)

But before we plunge ahead and code these schemes, we should think them through again, especially worrying about what sorts of errors *can* creep into our system. For instance: (1) What if there's a mixup and the same new member gets entered in twice? (2) What if we go to do an update and misspell the name accidentally? (3) What if we were using assembly language and limited names to having no more than 24 characters as suggested in Table 4, and the user enters a name that's too long? (4) Can you think of any more problems that we could have? (Unfortunately, there's a couple of biggies lurking in here. See if you can spot them.)

Problems (1), (2), and (3) all involve input data that doesn't fit the assumptions we've made. It's crucial to design programs so they don't blindly plunge ahead using invalid data. People make loads of typing mistakes as well as have mental lapses. It's a corollary of Murphy's Law that if your program *can* blow up on invalid data, sooner or later it will.

The solution to error (1) is to have our program search the data file to see if there is already an entry for the "new" member instead of just blindly adding a new record in. That won't involve much extra programming effort because we already have to be able to search for a particular name to do the update operation.

The solution to problem number (2) is to be sure that our search routine doesn't look farther into the arrays than the number of members, and if it comes to the end without finding the desired name, to inform the user of

---

The problem of storing records and manipulating files is a very widespread one. Even though we're dealing with a specific example here, the techniques we'll develop can be directly used in many other situations.

To name a few:

In a RTTY contest, you may want to keep track of the stations you've already worked.

Your club may want to keep a file of radio-electronics supply houses, storing name, address, type of material offered, people's experiences dealing with them, etc.

You could create a bibliography of reference books and magazines.

A store may want to keep a file of customers, storing name, address, previous purchases, needs, etc.

Etc.

Table 1.

that fact.

Finding a solution to problem (3) is more bothersome. One solution would be to redesign the data structure so it allows more characters per name. But that would require more memory, most of which would be used to store blanks at the end of normal sized names. Another solution would be to redesign the program so that it implements a string-like (variable length) data structure. But that would be a lot of work. A compromise is to have the program count the number of characters in each name that's entered, and if the count exceeds 24, to ask the user to supply an abbreviation. The last solution isn't perfect (what if two people abbreviate the name differently?), but it seems less offensive than having the program arbitrarily chop off part of someone's name.

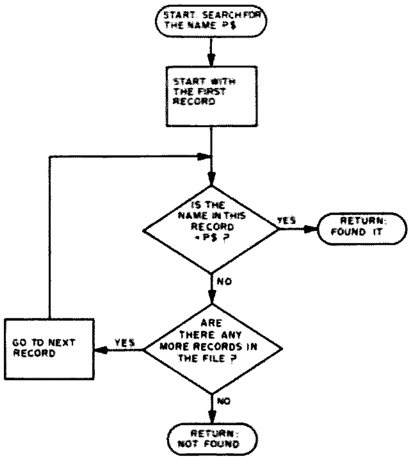

Fig 3.

Now that we've thought over the basic techniques we'll use, and have anticipated some of the rough spots, we can start designing the program in earnest. The main thing it has to do is repeatedly accept commands from the user and carry them out. See Fig. 1.

Now we can refine our plan by breaking down each of the boxes into finer and finer detail, ultimately converting each to some sequence of Basic statements.

Let's start with the one that says

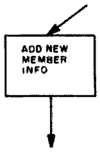

To carry it out, we need to get the new member's name, look through our file to make sure it's not already there, and if it's not, fill the new member's information into the arrays. Let's use a variable C (for "member count") to store the number of members. Since arrays in Basic start with position 0, location C in the arrays will be the location of the next empty spot. That means we can fill the new information into N$(C), A$(C), ... ,L$(C). Finally, we add one to C since now there's one more member in the file. If that doesn't seem clear, draw the arrays out and go through a few cases by hand to make sure that C is updated at the right time. See Fig. 2.

Now we're starting to roll. The only thing left to specify is the flow chart box that says "search file for that name." The new name has been assigned to the string variable, "P$." The flow chart is shown in Fig. 3, and here's the translation of the flow chart into Basic. Notice that we've written it as a subroutine since we're going to use it in two different places. It communicates its results by leaving the variable F with the value 0 if the sought-for name wasn't found, and with the value 1 if it was. In addition, if the name *was* found, the variable I will be left with the subscript value of the desired record.

```
1000 REM: SEARCH SUBROUTINE
1010 REM: LOOK FOR THE NAME "P$" IN THE
1020 REM: ARRAY OF MEMBER NAMES ("N$")
1030 REM: "C" IS THE NUMBER OF ENTRIES.
1040 REM: "I" IS THE SUBSCRIPT OF THE CURRENT RECORD.
1050 REM: RETURNS F=0 MEANS "NOT FOUND"
1060 REM:         F=1 MEANS "FOUND"
1070 LET I=0
1080 IF P$=N$(I) THEN 1140
1090    LET I=I+1
1100    IF I<C THEN 1080
1110 REM: DIDN'T FIND IT
1120 LET F=0
1130 RETURN
1140 REM: FOUND IT. IT'S IN LOCATION "I"
1150 LET F=1
1160 RETURN
```

Things still seem to be going all right, so let's forge ahead and convert our "add new member info" flow chart into Basic.

```
2000 REM: SUBROUTINE TO PROCESS "NEW MEMBER" COMMAND
2010 PRINT "WHAT'S THE NEW MEMBER'S NAME";
2020 INPUT P$
2030 REM: USE SEARCH SUBROUTINE TO PROTECT
2040 REM: AGAINST DUPLICATE ENTRIES.
2050 GOSUB 1000
2060 REM: IF F=1, P$ WAS FOUND.
2070 IF F<>0 THEN 2230
2080    LET N$(C)=P$
2090    PRINT "STREET, APT.#";
2100    INPUT A$(C)
2110    PRINT "CITY,STATE,ZIP";
2120    INPUT B$(C)
2130    PRINT "MONTH,YEAR DUES ARE PAID UP TO";
2140    INPUT M$,Y$
2150    LET D$(C)=M$+","+Y$
2160    PRINT "WHAT KIND OF SYSTEM";
2170    INPUT S$(C)
2180    PRINT "DOES ";N$(C);" WANT ON MAILING LIST (YES,NO)";
2190    INPUT L$(C)
2200    REM: INCREMENT "C"--WE HAVE A NEW MEMBER!
2210    LET C=C+1
2220    RETURN
2230 REM: ERROR OF SOME SORT.
2240 PRINT "SORRY, BUT ";P$;" IS ALREADY A MEMBER."
2250 PRINT "MAYBE YOU SELECTED THE WRONG COMMAND."
2260 RETURN
```

Again, everything went pretty smoothly, but let's look over the code closely to be sure there are no typos or other obvious errors. Everything looks pretty good ... but wait! What's that? Statement 2210 looks a little funny all alone there. It's not very common to increment a counter without checking to make sure it's still within the proper range. What were we thinking? Hmmm. "C" is the number of club members. Of course our *club* wants as

---

Array

An *array* is a collection of memory cells, individual members of which may be referenced by specifying the array name plus a subscript value (index).

In Basic, Fortran, Algol, etc.	*In Assembly Language*
Usually you need some sort of "DIMension" statement telling how long the array is: DIM M(50)	When writing the program you reserve a contiguous chunk of memory of the appropriate size.
Each array has a name: M	Each array has a *starting* (or *base*) *address* which is the memory location of the first byte in the chunk you set aside.
Individual locations are identified by listing a subscript expression after the array name: M(24)	Individual locations are accessed by adding an *offset* (or *index*) to the starting address. Often the machine architecture includes an *index register* for this purpose.
The subscript expression may be computed from other values: M(N*2+J)	The index can be varied depending on other values.

M(0)
M(1)
M(2)
M(3)
M(4)

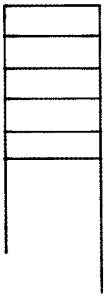

base

base+*n*

base+2*n*

base+3*n*

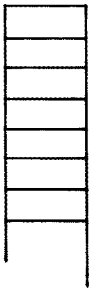

n=# of bytes per array element

Table 2.

	NS	AS	BS	DS	SS	LS	
0	JOSE ALCALA	1347 BARSTOW RD.	WATSONVILLE CA 95050	JULY, 1977	SWTC 6800	YES	0
1	SANDY SWEICKERT	P.O. BOX 3279	CAPITOLA CA 95030	DEC, 1977	NONE	YES	1
2	ANTHONY TEMPLE	½ FOX DR.	SANTA CRUZ CA 95061	AUG, 1978	ALTAIR 680	NO	2
3	SUSAN BURGESS	97 LIGHTHOUSE DR., =3	SAN GAUCHOS CA 95070	SEPT, 1977	IMSAI 8080	YES	3
4	BILL MCKEEMAN	3224 STEVENS CR. BLVD.	EL CERRITO CA 94720	JANUARY, 1979	BURROUGHS B5500	NO	4
5	SAM WALSH	1202 BROADWAY	LOS PERROS CA	DEC, 1978	HOME-BREW 8008	YES	5

Table 3.

many members as we can get, but how many can our *program* handle? The way we declared our arrays, we left room for 101 members, but was *that* right? What if we get *thousands* of members? We can't just keep increasing the array sizes in our DIM statement — surely not that many records will fit in memory at once. But if they won't, our program won't work! Oh no!

Let's try to suppress that old sinking feeling and figure out what's going on here. Suppose the average name has 20 characters in it and the average address 50. The dues expiration date takes up about 9 bytes, the system description about 25, and the mailing list info takes 3. That's about 107 bytes per record. We're running 8K Basic and our computer has 16K bytes in all. That means we'll be able to fit about 8K/107 ≅ 80 records before completely running out of space. That won't do. Maybe we've been extravagant in the way we've organized our data.

There *are* a few things we could do to free up a little more memory (see Table 5). We can't cut out any of the data stored about the members without making our program pretty much useless. We could throw out the REMark statements, but that won't make much difference (we might squeeze in 2 or 3 more records that way).

We *can* convert some of the string values to numbers. For example, the mailing list entry could just as well be 1 or 0 instead of "YES" or "NO", and we could list the dues payment date in the form 1978.06 instead of "JUNE,1978." In fact, we can do both of those and cram both values into one array by leaving the date positive if the member wants to be on the mailing list and making it negative otherwise. That way,

-1978.02 is equivalent to DS(0)="FEB,1978"
LS(0)="NO"
and
+1979.03 is equivalent to DS(0)="MARCH,1979"
LS(0)="YES"

If we do that, though, we want to be sure that no one who uses the program has to know about it (there'd be too many chances for error, plus who would want to explain it?). This would require subroutines to pack and unpack the information. Unfortunately, even that won't help very much (our club is very optimistic about our eventual size). The only option is number 6. We'll have to keep most of the data on an external storage device and bring it in in manageable sized chunks to process it. Maybe if we'd been a little more awake at the beginning (the Programmer's Lament), we could have seen that that was what we wanted to do all along — surely we weren't going to keep all the records in memory all the time! The Startrek freaks would have had our heads!

There are a number of different types of external storage we could use (including paper or mag tape, disc, etc.) and a number of different ways of interfacing to each. We can't go into them all here; instead I'll try to outline what to do assuming that we're using a cassette recorder. On most versions of Basic, you'll have to write machine language routines to handle the required I/O. You can either write machine language equivalents to the INPUT and PRINT statements, or you may want to write a routine that makes your cassette recorder look like the terminal to Basic. In that case, you would call the machine language routine, then INPUT from or PRINT to the tape, then call the routine again to restore the terminal as the I/O device. On the other hand, you may be able to connect your cassette recorder in parallel with your terminal (similar to the way Teletype paper tape equipment is related to the keyboard).

At any rate, let's assume that you have some way of getting records in and out of memory.

Interestingly, this doesn't force very many changes in our program. We just need another test here and there: a test which determines if we've finished searching through the records currently in memory. If we have, but still haven't found the record we want, we call a subroutine which reads a new memory-full of records from tape and forge ahead.

Now we have a scheme that's sure to work and we can push on, refining it and coding it . . . or do we? If our previous disaster should have taught us anything, it's not to get carried away with what seems to be a good idea without having a long hard look at it. We should review our plan, taking care to check not only whether we think we can

---

What if your version of Basic doesn't allow arrays of strings?

— If it allows string variables, but not arrays of strings, you can use a two-dimensional array to store names by ripping the string apart, converting each character in the name to a number (there should be a built-in function called something like ASC which does that) and storing them one by one. (On most versions of Basic, *two* characters will fit in each numeric variable.)

DIM N(100,24),A(100,24), . . .

N(I,J)

	J=0	J=1	J=2	J=3	J=4	5	6	7	8	9	10	11	12	13	
I=0	J	O	S	E		A	L	C	A	L	A				. . .
I=1	S	A	N	D	Y		S	W	E	I	C	K	E	R	. . .
I=2	A	N	T	H	O	N	Y		T	E	M	P	L	E	. . .
I=3	S	U	S	A	N		B	U	R	G	E	S	S		. . .
I=4	B	I	L	L		M	E	K							
I=5	S	A	M	.											
I=6			.	.											
	.	.	.												
	.	.	.												
	.	.													

— If it doesn't allow string variables, you're out of luck, and will have to use assembly language.

— In assembly language, simply allocate 24 or so bytes per array location, and store the characters one per byte, filling in any unused bytes with blank characters.

Table 4.

Seven ways of cutting down on memory usage listed in order of decreasing disgustingness.

0. Give up.

1. Decrease your ambitions, throw away some of your program's capabilities.

2. Throw out REMarks and cram more than one statement onto each line. Note: Since both of these make your program harder for people to understand, be *sure* to keep good written records of what the program does and how it does it.

3. Use abbreviations in string data, or convert string values into numeric values. Note: The latter saves a little space – the space used to store string length information.

4. Cram more than one piece of data into a single variable. Note: Be sure to include packing and unpacking subroutines so users don't have to deal with conglomerated, messy values.

5. Revise the basic algorithm so that it (re-)computes values instead of relying on stored data. One example: Instead of storing calender dates and days of the week, look up and use an algorithm which computes them.

6. Use external storage devices.

Table 5.

write the code, but also to see whether it's really practical. In fact, with a system like our club's, our new plan *isn't* practical. Our cassette tape interface runs at 300 baud – about 25 characters a second. That means each memory-full of membership records (each 80 records) will take almost five and a half minutes to read in.

Suppose we have 200 members and one of them tells us that there's a mistake in his mailing address. Suppose further that he's a recent member and his record is near the end of the file. The way we have it now, the person using the program to do the required update will have to put on the first tape, sit there 5½ minutes, find (groan) that the desired record wasn't on that tape, get the next one, wait 5½ minutes, etc. It would be so gruesome that no one would ever want to do the updates that were supposed to be one of our system's big features.

Fortunately, there's a way out and it won't require any major changes to anything but our search algorithm. Unfortunately, we'll have to wait until next month to find out what it is so we can (finally) complete our club's record keeping program.

What have we accomplished so far? We've taken a realistic, fair-sized problem and broken it down into small manageable parts. We've stepped back (well OK, *fallen* back) and analyzed how the system will work in practice – and found our plan wanting. Along the way, we've seen techniques for using arrays, organizing data, and we've seen a search strategy that is useful when dealing with small amounts of data. We've seen some techniques for saving memory space. Most of all, we've had a mind's eye view of the agony and the ecstasy of developing software. ■

Hints about next month's search strategy:

– If telephone directories were organized like the scheme we've used so far (the names aren't in alphabetical or any other particular order), would you be willing to use one?

– If somebody asks you to guess a number from 1 to 100 that they're thinking of, and they tell you "high," "low," or "got it" after each guess, what's the most guesses you'd ever need?

OSCAR Orbits on Your Altair

-- the software you've needed

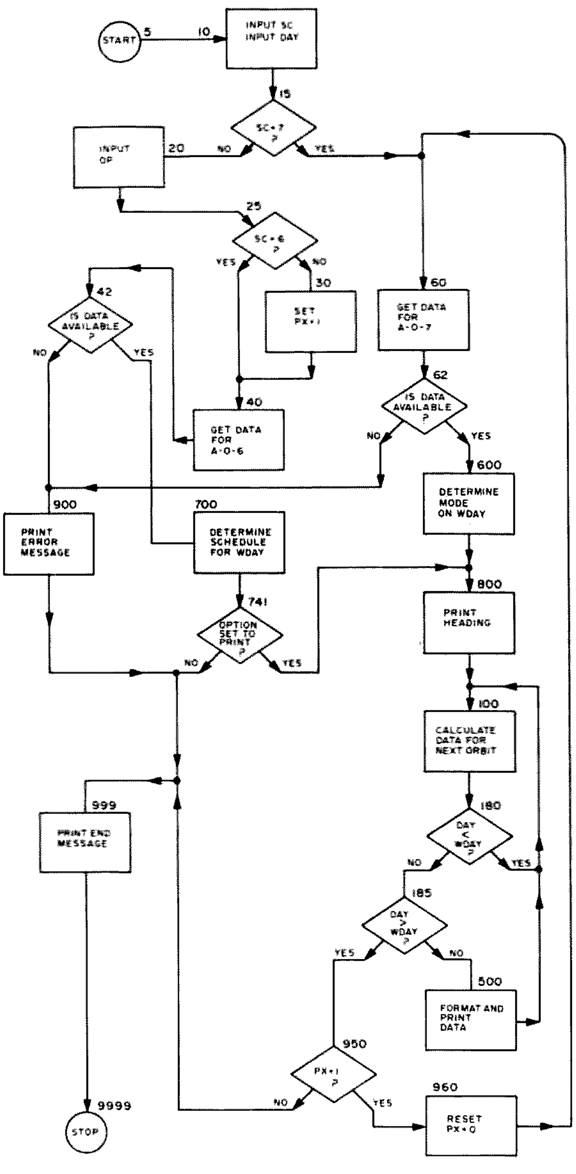

Fig. 1. Flow chart. Numbers in bold are equivalent line numbers.

Joe Kasser G3ZCZ
11532 Stewart Lane
Silver Spring MD 20904

Altair owners rejoice. You can now obtain individual orbital predictions for the AMSAT-OSCAR 6 and 7 spacecraft on your machine, for any day of the year, using the following program.

This program is written in ALTAIR BASIC (8K) and uses only about 1750 bytes of User Program Memory Area.

The program gives you the following options: spacecraft 6 – AMSAT-OSCAR 6 orbits only; spacecraft 7 – AMSAT-OSCAR 7 orbits only; spacecraft Ø – both spacecraft orbits.

If spacecraft 6 or Ø are chosen the following options are available: Ø – Print the orbits; 1 – Print the orbits only if the Spacecraft is scheduled for communications use that day.

The opening dialogue is as follows: The program asks for the day, spacecraft and if necessary the option. It then thinks about it for a while and prints out the required data. Several examples of such listings are shown.

The program works in the following manner, outlined in the flow chart of Fig. 1. The initial dialogue gives it the wanted day (WDAY) and the spacecraft (SC). Next it picks up the orbital parameters depending on the spacecraft chosen. The data for AMSAT-OSCAR 6 are stored in lines 40 and 45, and that for AMSAT-OSCAR 7 in lines 60 and 65.

A test is performed at line 42 or 62 to determine if data is available for the wanted day. If the "both spacecraft" option has been chosen, a "print" flag (PX) is set at line 30.

Next the condition of the

```
LIST

5    PRINT "OSCAR SPACECRAFT ORBIT PREDICTIONS V2.0"
8    C$="SPACECRAFT":E$=" SCHEDULED "
10   PRINT C$;:INPUT SC
12   PRINT "DAY";:INPUT WDAY
15   IF SC=7 THEN 60
20   PRINT "OPTION";:INPUT OP
25   IF SC=6 THEN 40
28   REM BOTH SC OPTION
30   SC=6:PX=1
35   REM OSCAR 6 DATA
40   RB=15682:TM=13.9:DAY=81:XS=57.9
42   IF WOAY<DAY THEN GOSUB 900
45   PD=114.99+0.0046076
50   GOSUB 700:GOTO 70
55   REM OSCAR 7 DATA
60   RB=6156:TM=101.48:DAY=81:XS=75.2
62   IF WDAY<DAY THEN GOSUB 900
65   PD=114.94+0.004834
68   GOSUB 600
70   GOSUB 800
75   PRINT "ORBIT","TIME(GMT)","LONG(DEG-W)","REF ORB(";RB;")"
100  RB=RB+1:XS=XS+PD/4
125  IF XS<360 THEN 140
130  XS=XS-360
140  TM=TM+PD
145  IF TM<1440 THEN 180
150  TM=TM-1440: DAY=DAY+1
180  IF WDAY>DAY THEN 100
185  IF WDAY<DAY THEN 950
500  TF=TM: HR=0
505  IF TF<60 THEN 515
510  TF=TF-60:HR=HR+1:GOTO 505
515  HR=HR*100: HR=INT(HR+TF)+(TF-INT(TF))
516  HR=INT(HR*100)/100
519  XP=INT(XS*100)/100
520  PRINT RB,HR,XP:GOTO 100
600  MODE=WDAY-INT(WDAY/2)*2
615  IF MODE=0 THEN 630
620  B$="A":GOTO 660
630  DB=WDAY+0
635  DB=DB-INT(DB/7)*7
640  IF DB=0 THEN 655
645  B$="B":GOTO 660
655  B$="X"
660  E$=" IN MODE "
670  RETURN
700  SDAY=WDAY+3:IF SDAY<7 THEN 720
710  SDAY=SDAY-7
715  IF SDAY>7 THEN 710
720  IF SDAY=1 THEN 750
725  IF SDAY=4 THEN 750
730  IF SDAY=6 THEN 750
740  B$="NOT AVAILABLE FOR USE"
741  IF OP=0 THEN 745
742  GOSUB 800:GOTO 950
745  RETURN
750  B$="AVAILABLE ON ASCENDING MODE PASSES"
760  RETURN
800  PRINT:PRINT:PRINT
810  PRINT "EQUATORIAL CROSSING TIMES FOR OSCAR";SC;"DAY";WDAY
820  PRINT C$;:PRINT E$;:PRINT B$:PRINT
830  RETURN
900  PRINT "SORRY, DATA VALID AS FROM DAY ";DAY
910  GOTO 9999
950  IF PX=0 THEN 999
960  PX=0:SC=7:GOTO60
970  PRINT"
999  PRINT TAB(40):PRINT "G3ZCZ"
9999 END
OK
```

```
OSCAR SPACECRAFT ORBIT PREDICTIONS V2.0
SPACECRAFT? 0
DAY? 84
OPTION? 0

EQUATORIAL CROSSING TIMES FOR OSCAR 6 DAY 84
SPACECRAFT SCHEDULED NOT AVAILABLE FOR USE

ORBIT     TIME(GMT)     LONG(DEG-W)     REF ORB( 15682 )
15720     103.69        70.34
15721     258.69        99.09
15722     453.68        127.84
15723     648.67        156.59
15724     843.67        185.34
15725     1038.66       214.09
15726     1233.66       242.84
15727     1428.65       271.58
15728     1623.65       300.33
15729     1818.64       329.08
15730     2013.64       357.83
15731     2208.63       26.58

EQUATORIAL CROSSING TIMES FOR OSCAR 7 DAY 84
SPACECRAFT IN MODE X

ORBIT     TIME(GMT)     LONG(DEG-W)     REF ORB( 6156 )
6193      34.43         58.43
6194      229.38        87.17
6195      424.32        115.91
6196      619.27        144.64
6197      814.21        173.38
6198      1009.16       202.12
6199      1204.1        230.85
6200      1359.05       259.59
6201      1553.99       288.32
6202      1748.94       317.06
6203      1943.88       345.8
6204      2138.83       14.53
6205      2333.77       43.27
                                        G3ZCZ
OK
OSCAR SPACECRAFT ORBIT PREDICTIONS V2.0
SPACECRAFT? 7
DAY? 45
SORRY, DATA VALID AS FROM DAY 81

OK
RUN
OSCAR SPACECRAFT ORBIT PREDICTIONS V2.0
SPACECRAFT? 7
DAY? 82

EQUATORIAL CROSSING TIMES FOR OSCAR 7 DAY 82
SPACECRAFT IN MODE B
ORBIT     TIME(GMT)     LONG(DEG-W)     REF ORB( 6156 )
6168      40.81         60.03
6169      235.76        88.77
6170      430.7         117.5
6171      625.65        146.24
6172      820.59        174.97
6173      1016.54       203.71
6174      1210.48       232.45
6175      1405.43       261.18
6176      1600.37       289.92
6177      1755.32       318.66
6178      1950.26       347.39
6179      2145.21       16.13
6180      2340.15       44.86
                                        G3ZCZ
OK
RUN
OSCAR SPACECRAFT ORBIT PREDICTIONS V2.0
SPACECRAFT? 0
DAY? 83
OPTION? 1

EQUATORIAL CROSSING TIMES FOR OSCAR 6 DAY 83
SPACECRAFT SCHEDULED NOT AVAILABLE FOR USE

EQUATORIAL CROSSING TIMES FOR OSCAR 7 DAY 83
SPACECRAFT IN MODE A

ORBIT     TIME(GMT)     LONG(DEG-W)     REF ORB( 6156 )
6181      135.1         73.6
6182      330.04        102.34
6183      524.99        131.07
6184      719.93        159.81
6185      914.88        188.55
6186      1109.82       217.28
6187      1304.76       246.02
6188      1459.71       274.75
6189      1654.65       303.49
6190      1849.6        332.23
6191      2044.54       .96
6192      2239.49       29.7
                                        G3ZCZ
OK
```

spacecraft on WDAY is computed. For AMSAT-OSCAR 6, the actual day of the week that WDAY occurs on is calculated (SDAY) and compared with the spacecraft operational schedule in the subroutine starting at line 700, and the program ends if option (OP) zero was chosen and WDAY is an OFF (i.e., AMSAT-OSCAR 6 is not available for communications use) day.

Similarly, the mode that AMSAT-OSCAR 7 will be in on WDAY is computed by the subroutine starting at line 600.

The table headings are then printed (subroutine starting at 800 and line 75).

The main loop starts at line 100. The orbit (RB) is incremented and the equatorial crossing (XS) is updated by one progression amount at line 100. If the value of XS should become greater than 360°, it is fudged by the routine at lines 125 and 130. The time TM is

```
RUN
OSCAR SPACECRAFT ORBIT PREDICTIONS V2.0
SPACECRAFT? 6
DAY? 85
OPTION? 1

EQUATORIAL CROSSING TIMES FOR OSCAR 6 DAY 85
SPACECRAFT SCHEDULED AVAILABLE ON ASCENDING MODE PASSES

ORBIT        TIME(GMT)        LONG(DEG-W)        REF ORB( 15682 )
15732        3.63             55.33
15733        158.62           84.08
15734        353.62           112.83
15735        548.61           141.57
15736        743.6            170.32
15737        938.6            199.07
15738        1133.59          227.82
15739        1328.59          256.57
15740        1523.58          285.32
15741        1718.58          314.07
15742        1913.57          342.81
15743        2108.57          11.56
15744        2303.56          40.31
                                        G3ZCZ
OK

RUN
OSCAR SPACECRAFT ORBIT PREDICTIONS V2.0
SPACECRAFT? 6
DAY? 84
OPTION? 1

EQUATORIAL CROSSING TIMES FOR OSCAR 6 DAY 84
SPACECRAFT SCHEDULED NOT AVAILABLE FOR USE

                                        G3ZCZ
```

incremented by adding the period (PD) at line 140. Note PD and TM are in minutes. If the new time is greater than 1440 minutes (24 hours), it is fudged and the day (DAY) count incremented at lines 145 and 150. Line 180 is the print control line, for if WDAY is greater than DAY, printing is inhibited.

This program calculates the orbital parameters for any wanted day (WDAY) by starting with a reference day and updating it by successive additions. Line 185 detects that all the orbits for WDAY have been printed and stops the program execution.

The routine beginning at line 500 formats the data for the printout at line 520. The value of TM in minutes is converted to hours and minutes and formatted to print out only two decimal places (the formatted value becoming TF). The equatorial crossing location (XS) is also similarly formatted (the formatted value becoming XP). After the data is printed, the program computes the parameters for the next orbit and so on.

After the day's orbits for AMSAT-OSCAR 6 have been printed or inhibited (depending on OP), the value of PX is tested. If it is Ø, the program exits. If it is 1, PX is reset and the orbits of AMSAT-OSCAR 7 for WDAY are calcuated and printed.

Spread out in the program are examples of string manipulation. At line 5 the strings C$ and E$ are set up. B$ is set to one of a number of possible states at lines 620, 645, 740 or 750, and E$ is changed at line 660. This allows the fixed "print string" function of line 820 to print a number of different messages depending on how the strings have been set up. This technique uses less memory space than routines that set up the strings individually and require separate print lines in the individual subroutines.

This is a pretty simple-minded program. It can be modified in many ways. Some suggested ones are as follows:

1. Only print orbits in range of station.
2. Print ascending mode orbits only in the case of AMSAT-OSCAR 6.
3. Add antenna pointing data.

If anyone is interested in a paper tape of the program listing, I can supply one for $1.00 and an SASE. ■

Jeff Roloff
2214 Brookshire Dr.
Champaign IL 61820

ASCII/Baudot Converter for Your TVT

-- series or parallel to boot

The schematic diagrams for the 3321 Baudot input option are shown in Figs. 1 and 2. The Baudot input option is used to receive serial Baudot, convert it to parallel, and make a code conversion to ASCII which can be used with the 3320 display unit. The three main circuits are a UART and two 8223 programmable read only memories (PROMs), which are programmed for the Baudot to ASCII conversion. The UART must be clocked at 16 times the baud rate. This clock, and therefore the baud rate, is dependent on the setting of the divide by N inputs of plug 2. The formula for setting the inputs to a one or a zero is:

$$256 - \frac{198{,}080}{16 \times \text{baud rate}} =$$

the setting of the jumpers

Note that the setting of the jumpers must be converted to binary before the dip plug is actually wired to ones and zeros.

Example: For 100 baud (132 wpm),

$$256 - \frac{198{,}080}{16 \times 100} =$$

$$\frac{198{,}080}{1600} = 137$$

Note that 137 is (lsb) 1001 0001 (msb) in binary.

The pins of the dip plug can be hardwired according to the above formula. Table 1 gives the settings and dip plug pin numbers for some common speeds. You could also run the wires from the plug to a switch so that you could have many speeds.

The output of these dividers (circuits 3 and 4) is pin 15 of 4 and is sent to the UART to clock the input data in. The input data can be either a 60 milliampere loop, RS-232, or TTL compatible. If it is TTL or RS-232, the data is buffered with Q1 and sent directly to the UART. To allow the transistor to switch from high to low, the output of the loop data in-

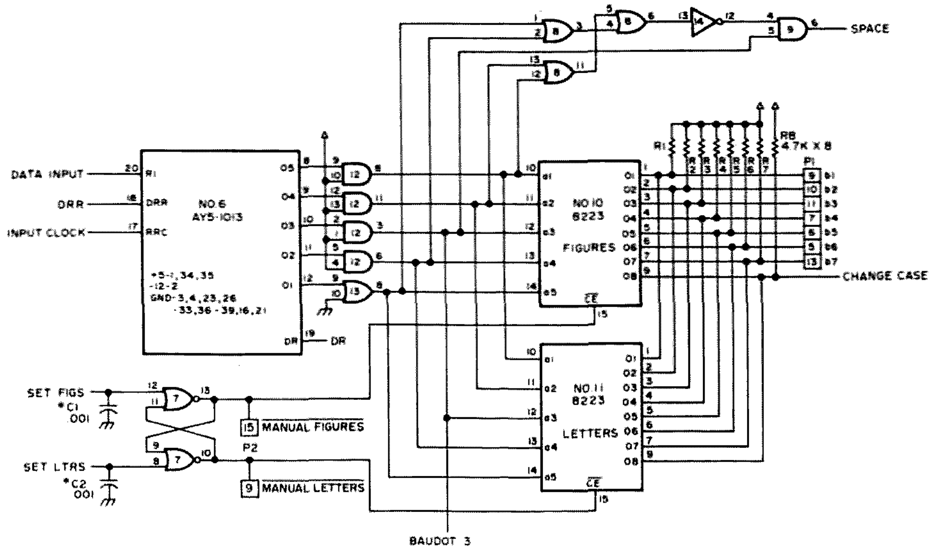

Fig. 1. UART and control. C1 and C2 are tack-soldered to the bottom of earlier boards. Newer boards have provisions for these capacitors in their artwork.

verter must be high. Therefore, the input is grounded if TTL or RS-232 is to be used. If the loop is used, diodes D1-D4 form a full wave rectifier whose output is regulated to 5.1 volts by D5. The 68 Ohm resistor limits the current through the LED inside the circuit (which is between pins 1 and 2). When this LED has current through it, it emits light which turns on a phototransistor, also inside the IC. This shorts pin 5 to ground, causing pin 10 of 14 to go high. Thus, with loop current flowing (mark condition), the input of the UART is high. The integrated circuit is an optically-coupled isolator, and is used to make sure that the high voltage loop does not get to the TTL circuits.

This input data is sent to pin 20 of the UART. When this data drops to a space condition (logical zero), the UART loads the data, one bit at a time, into its output register, and brings pin 19 (data ready) high. This sets a flip flop (circuit 7) whose $\bar{Q}$ output (pin 4) goes low. If the character was not a change case code, this becomes the strobe line to the 3320 display unit. As soon as the strobe has been received, a short strobe received is sent back to the UART board, which resets this flip flop. The $\bar{Q}$ output of the flip flop is also sent back to the UART to reset the data ready line. The data is still, however, available at the UART's outputs.

This data is sent to a buffer so that it can drive several TTL loads. From there it goes to the PROM code converter and to a circuit whose output (pin 6 of 9) goes high if the input data was a space. The outputs of the PROMs are open collector, and only one set of outputs is enabled at one time. One PROM is used if the unit is in the letters case. Likewise, the other one is used if it is in the figures case.

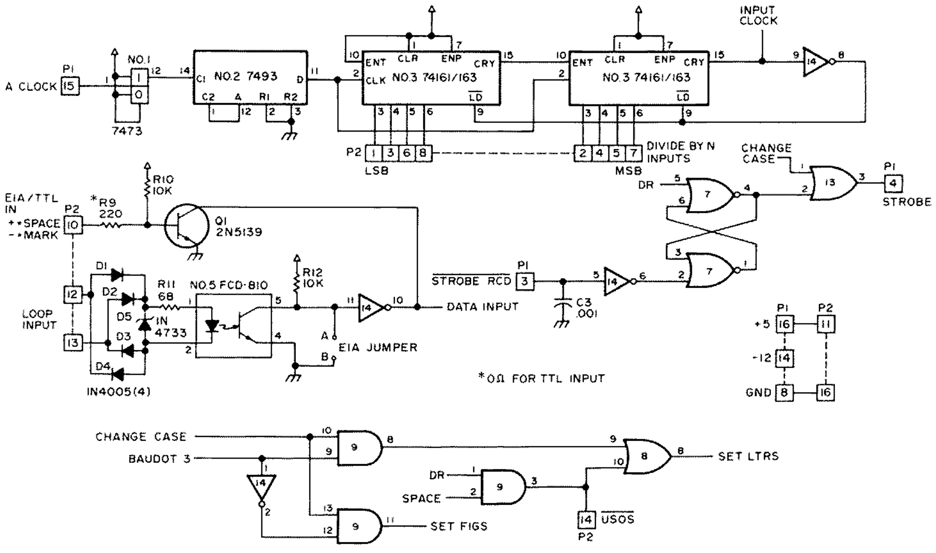

Fig. 2. Interfaces.

WPM	Baud	lsb	msb
P2 pins		1368	2457
132	100	1001	0001
100	73.7	1111	1010
75	57	1111	0100
66	50	0100	1000
60	45.5	0000	0000

Table 1. Settings of the divide by N inputs for common baud rates. The 60 wpm setting is not exact, but it is close enough such that no errors will be caused.

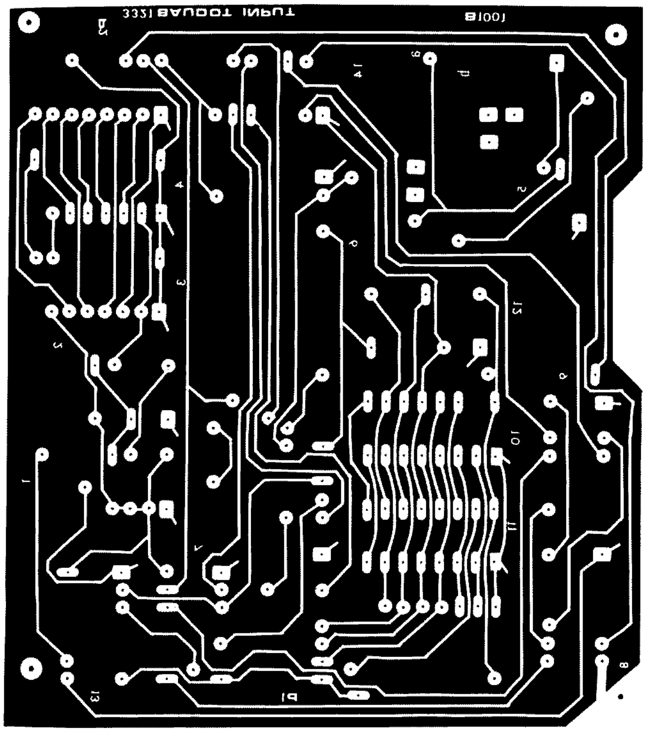

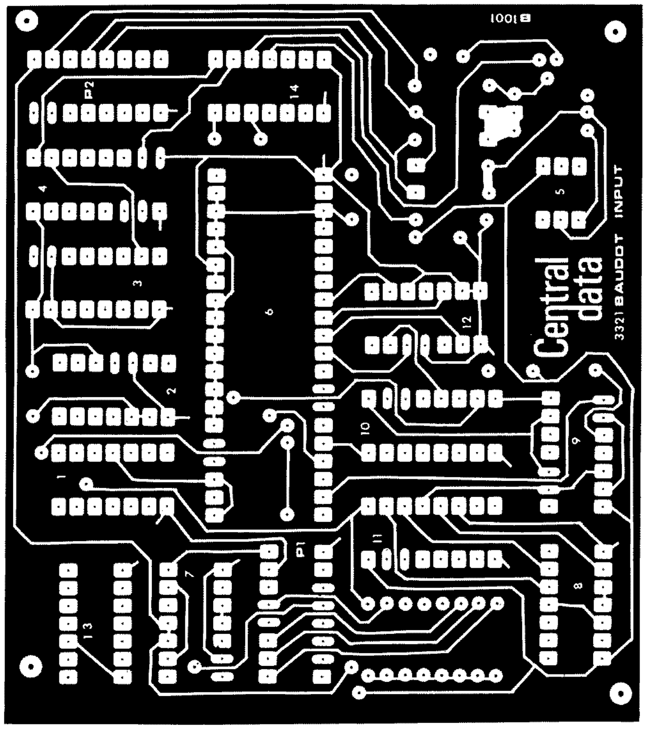

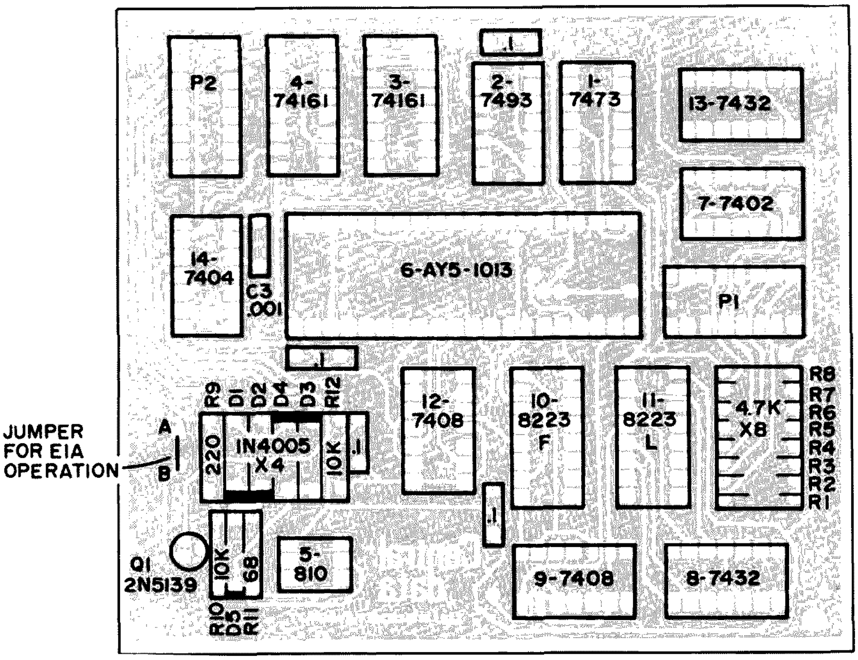

Fig. 3. PC board and parts layout.

The PROM that is enabled has pin 15 brought low by the other flip flop in circuit 7 (pins 13 or 10). The output of the code converter consists of 7 bits coded in ASCII and one bit that is high only if the case is to be changed. Table 2 has the ASCII and Baudot codes, as the PROMs convert them. The ASCII bits are sent to the 3320 display board through a buffer consisting of AND gates, but the change case bit is decoded with the Baudot data to decide whether to shift into figures or letters. If bit 3 of the Baudot data is high, the unit goes into letters shift, while if it is low it goes into figures shift. The unit can also go into letters if a space is received, and unshift on space is not inhibited (pin 3 of 9 is not grounded). If a figures shift command is received, pin 11 of 9 goes high, which sets a flip flop at pin 12 of 7. This brings 13 of 7 low, enabling the figures PROM. If a letters shift command is received, or if USOS is enabled and a space is received, pin 8 of 8 is high, which sets the flip flop at pin 8 of 7. This brings pin 10 of 7 low, which enables the letters PROM. The unit can be put manually into figures or letters by grounding the enable pins of the desired PROM. This will set the flip flop accordingly.

Assembly

Refer to the first four paragraphs of the main logic board's assembly procedure for basic information pertaining to the assembly of this kit. Fig. 3 is the placement drawing for all of the components on the Baudot Input Board. All parts have their type number and component number (as used on schematics) printed on the drawing.

1) Mount and solder all resistors and diodes to the board. The banded (cathode) ends of the diodes are marked by a square pad on the top of the board. Mount all resistors and diodes before soldering them, as a way to check your work.

2) Mount and solder the 40 pin socket and the two 16 pin sockets at the positions marked UART, P1, and P2, respectively.

3) Mount all the TTL integrated circuits on the board and, after checking their placement, solder them in. The placement of pin one is denoted by a small "flag" coming off of that pin's pad – along with a square pad on the top of the board.

4) Plug the 40 pin UART into the socket, being careful not to bend the leads.

5) Mount all capacitors and the transistor, being sure to polarize the electrolytic. The

CHAR	A_5	A_4	A_3	A_2	A_1	0_8	0_7	0_6	0_5	0_4	0_3	0_2	0_1
blank	0	0	0	0	0	0	0	1	0	0	0	0	0
T	0	0	0	0	1	0	1	0	1	0	1	0	0
CR	0	0	0	1	0	0	0	0	0	1	1	0	1
O	0	0	0	1	1	0	1	0	0	1	1	1	1
SPACE	0	0	1	0	0	0	0	1	0	0	0	0	0
H	0	0	1	0	1	0	1	0	0	1	0	0	0
N	0	0	1	1	0	0	1	0	0	1	1	1	0
M	0	0	1	1	1	0	1	0	0	1	1	0	1
LF	0	1	0	0	0	0	0	0	0	1	0	1	0
L	0	1	0	0	1	0	1	0	0	1	1	0	0
R	0	1	0	1	0	0	1	0	1	0	0	1	0
G	0	1	0	1	1	0	1	0	0	0	1	1	1
I	0	1	1	0	0	0	1	0	0	1	0	0	1
P	0	1	1	0	1	0	1	0	1	0	0	0	0
C	0	1	1	1	0	0	1	0	0	0	0	1	1
V	0	1	1	1	1	0	1	0	1	0	1	1	0
E	1	0	0	0	0	0	1	0	0	0	1	0	1
Z	1	0	0	0	1	0	1	0	1	1	0	1	0
D	1	0	0	1	0	0	1	0	0	0	1	0	0
B	1	0	0	1	1	0	1	0	0	0	0	1	0
S	1	0	1	0	0	0	1	0	1	0	0	1	1
Y	1	0	1	0	1	0	1	0	1	1	0	0	1
F	1	0	1	1	0	0	1	0	0	0	1	1	0
X	1	0	1	1	1	0	1	0	1	1	0	0	0
A	1	1	0	0	0	0	1	0	0	0	0	0	1
W	1	1	0	0	1	0	1	0	1	0	1	1	1
J	1	1	0	1	0	0	1	0	0	1	0	1	0
figs	1	1	0	1	1	1	0	1	0	0	0	0	0
U	1	1	1	0	0	0	1	0	1	0	1	0	1
Q	1	1	1	0	1	0	1	0	1	0	0	0	1
K	1	1	1	1	0	0	1	0	0	1	0	1	1
ltrs	1	1	1	1	1	1	0	1	0	0	0	0	0

Table 2(a). PROM coding, LETTERS PROM.

CHAR	A_5	A_4	A_3	A_2	A_1	0_8	0_7	0_6	0_5	0_4	0_3	0_2	0_1
blank	0	0	0	0	0	0	0	1	0	0	0	0	0
5	0	0	0	0	0	0	0	1	1	0	1	0	1
CR	0	0	0	1	0	0	0	0	0	1	1	0	1
9	0	0	0	1	1	0	0	1	1	1	0	0	1
space	0	0	1	0	0	0	0	1	0	0	0	0	0
#	0	0	1	0	1	0	0	1	0	0	0	1	1
,	0	0	1	1	0	0	0	1	1	1	1	0	0
.	0	0	1	1	1	0	0	1	1	1	1	1	0
LF	0	1	0	0	0	0	0	0	0	1	0	1	0
)	0	1	0	0	1	0	0	1	0	1	0	0	1
4	0	1	0	1	0	0	0	1	1	0	1	0	0
&	0	1	0	1	1	0	0	1	0	0	1	1	0
8	0	1	1	0	0	0	0	0	1	1	1	0	0
Ø	0	1	1	0	1	0	0	1	1	0	0	0	0
:	0	1	1	1	0	0	0	1	0	1	0	1	0
;	0	1	1	1	1	0	0	1	0	1	0	1	1
3	1	0	0	0	0	0	0	1	1	0	0	1	1
"	1	0	0	0	1	0	0	1	0	0	0	1	0
$	1	0	0	1	0	0	0	1	0	0	1	0	0
?	1	0	0	1	1	0	0	1	1	1	1	1	1
bell	1	0	1	0	0	0	0	0	0	0	0	0	0
6	1	0	1	0	1	0	0	1	1	0	1	1	0
!	1	0	1	1	0	0	0	1	0	0	0	0	1
/	1	0	1	1	1	0	0	1	0	1	1	1	1
—	1	1	0	0	0	0	0	1	1	1	1	0	1
2	1	1	0	0	1	0	0	1	1	0	0	1	0
'	1	1	0	1	0	0	0	1	0	0	1	1	1
figs	1	1	0	1	1	1	0	1	0	0	0	0	0
7	1	1	1	0	0	0	0	1	1	0	1	1	1
1	1	1	1	0	1	0	0	1	1	0	0	0	1
(	1	1	1	1	0	0	0	1	0	1	0	0	0
ltrs	1	1	1	1	1	1	0	1	0	0	0	0	0

Table 2(b). PROM coding, FIGURES PROM.

square pad on the top of the board denotes the positive end of the capacitor and the emitter of the transistor.

Before attempting to operate this board, the main logic board must be completely working.

Operation

To hook the Baudot Input Board to the display board and to a TTY system, there are two 16 pin sockets and dip plugs that are used as connectors. The cable with two dip plugs that was shipped with the Baudot board is used to connect the large display board to the Baudot Input Board. This is accomplished by connecting the input socket of the main board to the P1 socket of the option board. To hook the system to your teletype system, the dip plug with cable contained in the main logic board's kit is used along with the P2 socket.

The pins of the P2 socket have the following designations:

1 – b1
2 – b2
3 – b3
4 – b4
5 – b5
6 – b6
7 – b7
8 – b8
9 – $\overline{\text{MANUAL LETTERS}}$
10 – EIA, TTL input
11 – +5 V
12 – Loop input
13 – Loop input
14 – $\overline{\text{Unshift on Space}}$
15 – $\overline{\text{MANUAL FIGURES}}$
16 – Ground

The specifications for the input signals are:

TTL – 0-.8 V = mark
2.4-5 V = space

EIA – +3-+15 V = space
-3--15 V = mark

Loop – 0-2 mils = space
20-80 mils = mark

The pins marked b1-b8 represent the divide by N inputs and are used to set the speed of operation. These wires can be hardwired to one speed or can be run to a switch where many speeds can be selected. The procedure for figuring the correct jumpers is given in the theory of operation section.

Conclusion

If you decided to build all three boards, you now have a near universal display unit which can receive serial or parallel ASCII or serial Baudot. In any case, I hope that you enjoyed this project as much as I did. ■

Parts List (Baudot)

1 – 7404
1 – 7402
2 – 7408
2 – 7432
1 – 7473
1 – 7493
2 – 74161 or 74163
2 – 8223 (coded)
1 – AY5 – 1013 UART
1 – FCD – 810
4 – 1N4005
1 – 1N4735
1 – 2N5139
2 – 16 pin dip sockets
1 – 40 pin dip socket
1 – double ended dip plug
3 – .001 disc capacitors
4 – .1 disc capacitors
8 – 4.7k resistors
1 – 68 Ohm resistor
1 – 1k resistor
2 – 10k resistors
1 – 220 Ohm resistor
1 – Baudot Input circuit board

A kit of the above parts is available from: Mini Micro Mart, 1618 James Street, Syracuse NY 13203.

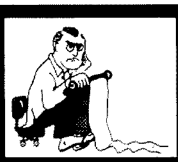

. . . de W2NSD/1

EDITORIAL BY WAYNE GREEN

from page 4

El Toro Crappo. After a couple days of driving all over the Bay Area, I have to report that you won't run into a nicer bunch of people. I never heard any bad language; I checked with one group after another on the channels and they said that, yes, a couple years ago they used to be annoyed with such characters, but they were long gone. I did hear someone jamming a channel for a bit, but the reaction of the others on channel made it apparent that this was unusual.

The one glaringly obvious aspect of CB in San Francisco was the low level of interference on most channels compared to many cities I have visited. There seem to be very few CBers in the Bay Area compared to back East. I was able to get on many channels and talk from my puny mobile setup (with a miniscule antenna) for many miles without being stepped on. I was absolutely amazed.

Even the highway channel (#18 there) was reasonably dead much of the time . . . it was so quiet that it took me a while to find out which channel was being used for traffic reports.

It is a pity that the FCC is so out of touch with their own services.

REPORT FROM DENVER

After getting thrown off the program, I decided not to bother with the expense of going to Denver . . . which turned out to be a shrewd decision, according to a report from an exhibitor.

This exhibitor drove a couple of days to get to Denver and found first off that his confirmed reservations were screwed up. After a lot of hassle, they finally gave him his room. Then he started looking for the material he had shipped out to be held for him at the convention . . . the stuff he was planning to sell and the reason he went all that way. After following a very difficult trail, he discovered that the firm he had been told to ship the stuff to had gone out of business three months earlier. The new firm received his shipment, held it ten days and then returned it. So all he had to sell was what he had brought with him in his car.

The booths were $300 each . . . and that is extremely high for ham convention booth space. He found his booth down in the cellar, not with the rest upstairs. There were a few others down there, too. Worse, there were no signs in the upstairs exhibit area to tell anyone about the cellar exhibits . . . and there was little light for some of the cellar booths. The convention committee refused to do anything about either problem, despite many tries at getting help.

Our hero took on the hotel again and finally managed to get them to get some lights set up so visitors, if any, would be able to see his booth. Then he tried again to get help getting some signs to let convention-goers know there were some exhibits in the cellar . . . no good. Finally, in desperation, he made some signs himself and put them near the elevators. This brought a few hardy souls to the remote area, but about half of the hams never found the place.

Not that things were going all that well with the regular exhibits. It was pretty lonesome there, and one manufacturer got so fed up that he gave up by Friday night and pulled out for home. Even the computer exhibits were empty most of the time . . . and computers have been pulling the best of all exhibits at conventions this year. Estimates by exhibitors put the

attendance at a maximum of a bit over 1000 for Friday, and not much more than that on Saturday . . . and on Sunday virtually no one showed up so the exhibitors packed up and went home.

I'll be interested in how the show looked to the convention-goers . . . so drop a line to *73* with your views on what was good and what bad about the ARRL National Convention at Denver.

CB AND AMATEUR RADIO

As previously reported, ham clubs are now finding that about 80% of the new faces appearing for their Novice and General courses are coming from the CB ranks. This is natural . . . CB is an easy entry into radio two-way and a fellow would have to be a fool not to get his feet wet with it for starters. CB is fun, as about 20 million people have discovered. Of course we amateurs know that hamming is even more fun, but getting the word out is difficult.

In years gone by, I wrote a ham column for *Electronics Illustrated* as a way of enticing newcomers into amateur radio. That magazine evolved into *Mechanics Illustrated* and the ham column demised . . . pity. It seemed to me that we really needed a way to get hamming known to CBers . . . so I stewed about that for quite a while . . . and came up with an answer.

My column, "CB Radio Today," is being distributed nationally to newspapers. The column starts out telling about CB radio and then goes on to give the skinny on amateur radio. The results from the first few columns published (Boston, Galveston, and a few other cities) have been a massive influx of letters asking how people can get in touch with local ham clubs to get into the Novice classes.

WHAT CAN YOU DO?

You can help a lot with this . . . and in several ways. First, you can get after your local paper editor to run my column . . . he has nothing to lose for the paper advertising department should be able to get ads from Radio Shack and other CB dealers in the area to pay the freight. If you are willing to go see your local editor, drop me a note and I'll send you some sample columns to show him. The reader response has been fantastic . . . many write in to say they are saving the columns in a notebook for reference.

Secondly, you can make sure that your club has a Novice training program and that this is made known on a poster in all local radio stores. All I can do in my column, which is distributed nationwide, is to tell CBers to look up their radio distributors in the Yellow Pages and go there for info on classes.

The FCC admits that the club program for training Novices has already turned the tide and the number of amateurs is growing for the first time in twelve years (since "incentive licensing" was proposed). With large empty VHF bands, we need to keep plugging for more hams and more activity. You can do your bit by seeing that we get PR in your papers . . . and my CB column is the best way to keep this PR coming week after week.

Write to "CB Radio Today," Peterborough NH 03458 for sample columns and info.

TALK SHOW

It looked like a winner! A radio talk show with a ham MC, an active CBer, a representative from the FCC, an ARRL director, and Wayne Green on the telephone to talk about both CB and hamming. What a fantastic opportunity to help a few thousand more people get to know about hamming.

Things bombed out badly. The CBer had little background so couldn't add much to the pot. The FCC chap was an old time two letter call ham, so he and the ARRL director got into esoteric ham stuff of no possible interest to the general radio listeners. Instead of explaining about the *fun* of amateur radio and how to get started in radio communications via CB, the director got right into a long blast on how amateur radio was *not* a hobby, it was a *service* and was regulated by the ITU (whatever that was).

The FCC rep was about as anti-CB as hams come. I passed up the chance

to ask him if he was active on CB because it was obvious he wasn't. CB was a bunch of law-breakers using bad language, period. Well, it might be okay back East, but where he was it was terrible. What can you say? I'll be in his city in a few days and I'll see for myself, for I will be bringing along a CB rig as well as my trusty 2m mobile. Like many other hams, I find CB invaluable for travel, though I seldom use it at home.

Since the general public is now aware of CB, but not really familiar with it, it seems to me that our best bet when we have a chance to get on radio or television is to let them know the benefits of CB . . . and then the further benefits of amateur radio . . . emphasizing that getting started in either is simple and not expensive. A lot of people have the idea that hamming takes huge investments in equipment, and they are surprised to find that amateur radio is really a very inexpensive hobby compared to most (like sports cars, boats, travel, blonds).

TRUMPET BLOWING

While at times I anguish over the time it takes for change, I suppose I should be satisfied that changes are (at last) going in what I consider a good direction . . . such as the recent granting of Novice privileges to Techs. The petition for that change was put into the FCC so many years ago that few of you probably have any notion of who was behind it . . . probably ARRL, right? To set the record straight, that was submitted by *me* around five or ten years ago . . . I forget when.

It is with some irritation I listen to tapes of ARRL officials going around to ham clubs saying that Wayne Green proposed "incentive licensing," without a doubt the most destructive rule changes in our history. It totally stopped the growth of amateur radio for over ten years! When ARRL proposed it, I fought it . . . when they petitioned the FCC, I fought it . . . and history, for whatever satisfaction there is in that, proved all of my arguments against it right. It was a bomb. I must admit that I feel a sense of achievement at the gradual veering away from the restrictions of incentive licensing.

The FCC is in the throes of trying to de-regulate amateur radio. This is a direct result of the hearing I organized a couple of years ago . . . the first of its kind ever put on by radio amateurs. Many of the particularly restrictive rules of which we complained have already been eased . . . the time, effort and expense of the hearing have been amply repaid. Yet we have, I feel, a long way yet to go. It is apparently so alien to a government agency to try and cut back on rules that every time they make a swing at it they go half way and falter.

One of my other petitions, which has been sitting at the FCC for several years, is the proposed Communicator license plan. I put that in to counter the EIA push to take our 220-225 MHz band as much as anything. It still remains to be seen whether this is going to work. While there is growing enthusiasm over my proposal, on the other hand we have Jerry Ford and the White House putting on the pressure for CB to get part or all of the ham band.

FORD IN OUR FUTURE?

When I got word that the renewed pressure for grabbing our 220 MHz band was coming from the White House, I got in touch with the Office of Telecommunications Policy there and pinned them down. They swore that they were not in favor of the grab, but that the pressure was coming from considerably above them in the White House. It was enough for me to go out and get a jar of Skippy and see if I could get the taste of things to come.

Yes, I know ARRL/*QST* has been very adamant that we not discuss religion or politics on the air . . . and it goes against many generations of hidebound Yankee Republican Conservatism for me to say it . . . but it sure looks to me as if a vote for Ford/Dole is a vote for CB on 220 MHz. From the polls and from my own reaction to Ford, I doubt if we have any serious worries. Apparently there are several million people who are just as enthusiastic about Jerry as I am. Pass the Skippy.

Evert Fruitman W7RXV
2308 West Rancho Drive
Phoenix AZ 85017

The Smoke Tester

- - power supply checker outer

This tester allows full power (smoke) testing of large or small power supplies *before* they are put on the rig. It will tell how many volts at how many Amps the supply can deliver, and what kind of voltage loss to expect under load. It can also help determine some of the attributes of low voltage power transformers, without having to wire them into a power supply.

It consists of 2 or 3 transistors, a pot, a couple of meters, a few diodes and some loose hardware. Don't forget the heat sink. If you wish to be formal about it, then add a chassis of some kind.

Fig. 1 shows the basic circuit. As the wiper is moved toward the plus, more current flows in the base circuit. The external circuit looking into the collector/emitter sees a lower and lower resistance. The ammeter and voltmeter give an idea of Watts cooking (sorry about that). The diode allows less than perfect attention to the polarity of the incoming voltage. The resistor in series with the base limits base current to a safe value.

Although the transistor manual indicates that the 2N3055 is a "15 Ampere" transistor, 2 or 3 of them cleared like fuses when the collector current was slowly increased above about 11 or 12 Amps. The 10 Amp fuse was put in the emitter, and collector current excursions were limited after that.

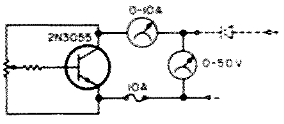

Fig. 1. Basic circuit.

Since power supplies capable of giving more than 20 Amps were to be tested, two 2N3055s were put in parallel. The fuses gave enough resistance in the emitters to help the transistors share the current in a more or less equal manner (at least there were no more creamed transistors).

A Darlington or piggyback configuration is used to reduce the power dissipation requirements of the pot. Ten Amps in the collector can require as much as ½ Amp in the base. Half an Amp times

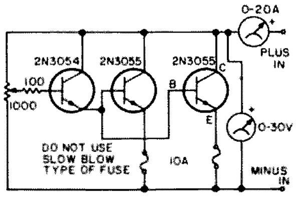

Fig. 2. Solid state resistor.

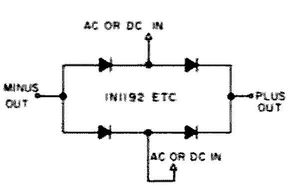

Fig. 3. Bridge rectifier.

several volts equals several Watts. The Darlington system reduces the input current by as much as 50 times. That figures out to about 10-20 mA for 10-20 Amps in the collectors, and makes the system practical.

Note that if the power supply is delivering 15 Amps at 13 volts, then something is going to have to dissipate 195 Watts. *Be sure* that the 2N3055s are on a large enough heat sink.

If a full wave bridge rectifier is placed in front of the tester, power transformers can be checked for voltage out versus current. That information would have saved a lot of time in the past.

Of course, there are single transistors around that meet the voltage, current, and power ratings of this tester.

If PNP transistors are used, reverse the polarity of the meters and diodes. ■

Social Events

ST PAUL MN
OCT 1-3

The '76 ARRL Dakota Division Convention will be held October 1, 2 and 3, 1976 at the new St. Paul Civic Center, 143 W. 4th Street, St. Paul, Minnesota. MARS, ladies' program, technical seminars, ARRL forum, FCC exams, Wouff Hong, W.A.M. Award. Large exhibit area with many new products, outstanding speakers, ARRL Headquarters personnel will be there, super full course banquet, and an ICOM IC-230 will be awarded to an advance registrant. Registration: $4.50 ($6 after Sept. 12). Among the featured speakers will be Wayne Green W2NSD/1, on "50 years of Ham Radio, 1936-1986."

LEXINGTON KY
OCT 3

The Central Kentucky Hamfest will be held on October 3, 1976 at the Countryworld Convention Center on I-75 between Lexington and Georgetown, Kentucky. Prices will be given away, including a special Novice grand prize. There will also be an indoor flea market. Talk-in on 146.16-76. Admission: $2.50 advance; $3.00 at the door; includes grand prize stub. Doors open at 8 am. For more information and advance tickets write: Hamfest, Box 4411, Lexington KY 40504.

WASECA MN
OCT 9

The Sixth Annual South Minnesota Swapfest – Minnesota's largest ham gathering – will be held Saturday, October 9, 9 am to 4 pm at Waseca Community High School. Talk-in on .94. Contact Viking Amateur Radio Society (VARS), Box 3, Waseca MN 56093, 507-835-2679.

ERIE PA
OCT 9

The Radio Association of Erie has just approved the date for its fall Hamfest and Flea Market on Saturday, October 9, 1976. This year's event will be held at the Kuhl Hose Company Grounds on Pennsylvania Route 8, 1½ miles south of I-90. Admission is free with a $1.00 per car charge for the flea market. The time will be from 10 am to 4 pm with a dinner to follow at 6 pm. For more information contact RAE, Box 844, Erie PA 16512.

SYRACUSE NY
OCT 9

The Radio Amateurs of Greater Syracuse will hold their annual Hamfest on Saturday, October 9, 1976 from 9 am to 6 pm at the Syracuse Auto Auction building on Route 11, 4 miles south of Syracuse. Tickets are $1.50 if purchased before October 1st and $2.00 thereafter. Food will be available, as well as a breakfast menu for early comers. The Lafayette Apple Festival is being held the same day and there will be buses to it leaving from the hamfest gate. The program will feature Dave Sumner of the ARRL, Frank WB2MFF, on "Microprocessors and Amateur Radio," a UNYREPCO panel, and a Navy MARS meeting. For tickets or further information, write R.A.G.S., Box 88, Liverpool, New York 13088.

OLD WESTBURY NY
OCT 10

The Electronic Flea Market sponsored by L. I. Mobile Amateur Radio Club (LIMARC) will be held Sunday, October 10, 1976, from 9 am to 4 pm at the N.Y. Institute of Technology, Rte. 25A and Whitney Lane. Admission $1.25 per buyer; $2.50 per seller, per space. Information call Hank WB2ALW, 516-484-4322. Talk-in on 25/85.

GAINESVILLE GA
OCT 17

The Lanierland A.R.C. Hamnic will be held October 17, 1976, at the Lake

Lanier Islands Dogwood Pavilion. Prize tickets $1.00 each. There is no registration fee but Lanier Islands charges $2.00 entry fee per car. Plenty of room for flea market, picnic and use of island facilities. Talk-in on W4IKR/4 146.07/.67. For additional information contact Paul Watkins W4FDK, Route 11, Box 277, Gainesville GA 30501.

SHARON MA
OCT 17

Sharon A.R.A. Auction will be held Sunday, October 17, 1976. Doors open at 12 noon. Auction starts at 2 pm. Location: Sharon Community Center, Massapoag Ave., Sharon, Mass. Free refreshments. Club takes 15% commission.

TORONTO CANADA
OCT 22-24

The Radio Society of Ontario will hold its 9th Annual RSO Convention on October 22-24, 1976 at the Don Valley Holiday Inn, Toronto. Largest amateur radio convention in Canada. Includes Friday night eyeball buffet and dance, Saturday night banquet and dance, ladies' program, and many more social activities. Convention program includes Amateur Forum, Radio Propagation, Emergency Communications, Components, Flea Market, and much more. Registration before Sept. 30 non-member $8, member $7. Talk-in stations: 75 meters – ONTARS 3755 MHz Friday 1300-2300 hrs local time, Saturday 800-1400 hrs. Sunday 0900-1200 hrs. 2 meter FM – VE3RPT – 146.46/147.94. Simplex – 146.51. he convention call will be VE3RSO – be sure to check in!

MARION OH
OCT 24

The Marion Amateur Radio Club's "Heart of Ohio Ham Fiesta" will be held October 24, 1976, at the National Guard Armory, Marion, Ohio. Pre-registration – $1.00. Send SASE for tickets or info to Earl Adey WB8EDO, 2697 Curren Drive, Marion, Ohio 43302.

VIENNA VA
OCT 24

The AMRAD COMPUTERFEST will be held on October 24, 1976 at he Vienna Community Center, 120 Cherry St., Vienna, Virginia, near Exit 11S of the Washington, DC Beltway.

NEW ORLEANS LA
OCT 30-31

The New Orleans Hamfest and Computer Fest, sponsored by the efferson Amateur Radio Club, will be held Oct. 30-31 at Archbishop Rummel High School, 1901 Severn Ave., Metairie LA (New Orleans uburb). Forums at the fourth annual vent will include several on computers by the Crescent City Computer Club and others by or about AMSAT, MARS, emergency communications, RTTY, QRP, Novices and beginners nd antennas. Reservations and latest etails may be obtained by writing to Dominick "Nick" Tusa WA5RMC, Chairman, New Orleans Hamfest, PO Box 10111, Jefferson LA 70181. Talk-in frequencies will be 146.34-.94 and 3.95 MHz.

PLYMOUTH IN
OCT 31

The Marshall County Amateur Radio Club Swap-n-Shop will be held on Sunday, October 31, 1976, at the Plymouth, Indiana National Guard Armory located at 1220 W. Madison Street from 7 am to 4 pm. Free tables, no charge for set-up. Tickets $2 at door. Food, drink and door prizes. Talk-in on 146.07-67 and 146-94 simplex. For further information contact WA9INM, Route 3, Box 526, Plymouth, Indiana 46563.

McAFEE NJ
NOV 13-14

The 1976 Hudson Division Convention will be held November 13-14, 1976 at the Great Gorge Resort Hotel in McAfee, New Jersey. There will be ARRL and FCC forums, large indoor exhibit area with 40 booths, giant outdoor flea market, super raffle, free gifts, special features, indoor swimming, game room, and much more. Registration: advance $3, at door $4. For hotel registration: Al Piddington WA2FAK, 4 Acorn Drive, East Northport NY 11731.

J. H. Everhart WA3VXH
18D Lynnebrook Apts.
Millersville PA 17551

The Coffee Flipper

--and executive decision maker

Twice a day, American industry grinds to a halt. Work stops as everyone leaves his bench or desk for a coffee break. It's the time when everybody relaxes, has a cup of coffee or other beverage and forgets work for a few minutes. Often, a small group will collect and flip coins to decide whose turn it is to buy.

But, hey! That's almost work itself. The whole idea of the coffee break is to cease one's labors and unwind. With this thought in mind, I set my creative juices flowing. Drawing upon my vast experience and unlimited talent, I cast about for some means of minimizing effort and s-t-r-e-t-c-h-i-n-g my coffee breaks by automating the coin toss.

Several methods floated by my mind's eye: How about a gated oscillator controlled by a push-button switch and feeding a flip flop? The two outputs of the flip flop could feed two lamps, one labelled "heads" and the other "tails." Pushing the button would turn on the oscillator which would start the flip flop going back and forth. If the rate was fast enough (10 Hz or so), it would be impossible to perceive the lamp states, so that when the button was released, heads or tails should come up randomly. Maybe for a multiple player version, I could use a shift register or ring counter somehow, so that only one light would come on at the end of the cycle, that corresponding to the lucky player who buys for the day.

Shucks! Pressing a button is almost as strenuous as flipping a coin, though. And using the ring counter could get complicated, not to mention the cries of "Foul!" since only one person would decide the fate of everybody playing. Then too, the gadget couldn't get too complicated 'cause I wanted to build it completely from my junk box.

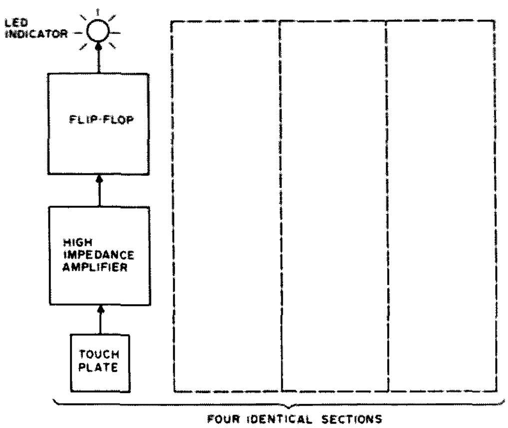

Fig. 1. Functional block diagram.

Description

A block diagram of the final product is shown in Fig. 1. Since usually three or four players participate, there are four sections, one for each. Operation is simple. A finger placed on a touchplate conducts 60 Hz hum (courtesy of radiation from the ac power line) to the high gain amplifier. The amplifier takes this low level sort of sine wave and squares it up, feeding steep-sided pulses to the flip flop. The flip flop controls the readout — one LED per

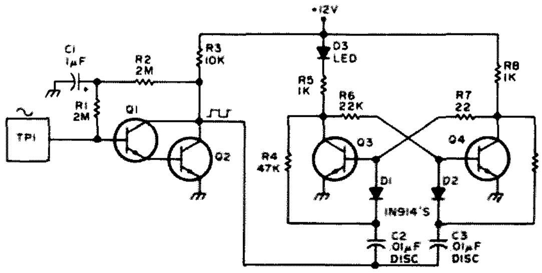

Fig. 2. Schematic diagram of "coin" block.

section. Simplicity and lack of effort are outstanding for this configuration. The touchplate control system exemplifies modern labor saving techniques similar to those used on the latest home appliances. Only one illuminated display element is required per stage, since one need not have heads or tails, just on and off. This saves the mental work of remembering heads and tails, plus it saves on parts – LEDs cost 20 cents apiece!

Refer to Fig. 2 for detailed operation. Touchplate TP1 is connected to the base of a Darlington pair composed of Q1 and Q2. R3 is the collector load, while R1 and R2 bias the pair in the active region. C1 bypasses ac feedback so that dc biasing is achieved with least effect on ac gain. The stage has a high input impedance and enough gain to "square up" sine waves impressed on the touchplate by a finger placed thereupon (remember checking a tube audio amplifier by putting a finger on the grid terminal?). The square waves are fed to a flip flop (a.k.a. bistable multivibrator), formed by Q3 and Q4. R5 and R8 are the load resistors, while R6 and R7 provide the cross-coupling required for flip flop operation. Gating diodes D1 and D2 are biased by resistors R4 and R9 so that incoming pulses are steered from C2 and C3 only to the stage which was conducting before the negative edge of the pulse occurs. This steering circuit assures reliable "toggling" of the flip flop so that it flips states only once for each incoming pulse. As mentioned earlier, there is only one readout per "coin" block. It can be connected in either load resistor leg to the positive supply voltage. In the circuit shown, the LED is connected to Q3 and R5 so that it lights when Q3 conducts.

It may appear that both the high impedance input amplifier and flip flop are slightly more complicated than necessary. Strictly speaking, this is so, if transistors of known types are used. However, this design can use darned near anything in the junk box.

Construction

The basic overall layout is shown in Fig. 3. The components were wired on a piece of vectorboard approximately 2.75" x 6.5". The four "coin" blocks were laid out so that the LED was placed closer to its corresponding touchplate than any other for ease of interpretation. Component to component wiring was done on the back side, with only the two power leads (+) and (-) brought out to Vector T-28 pins for external connection. To maximize cost effectiveness, no power supply was included. Any source of 9 to 15 volts at 40 mA will do. No cabinet was used both to save money and to impress everyone by having the "guts" showing. Since all signals are low frequency, wiring and layout are very non-critical.

As mentioned earlier, the circuit was designed so as to be intolerant to component variation. Values shown in the schematic were used because I "guesstimated" that they would work. If you use something else, it will probably work. To be on the safe side, use "symmetrical" parts substitution in the flip flop. For example, if you want to use a 27k at R6, be sure that you use the same resistance for R7. All transistors used were NPN silicons with squirrely "in-house" type numbers. If you want to buy new ones, MPS 5172 or 2N5172 types are fine. Actually any NPN silicon with an hfe of 50 or more and a breakdown voltage over 20 volts should work. The LED is a 5 for $1 type picked up at a hamfest. Since it runs at about 12 mA, almost anything will do. The touchplates used were about .5" x .5" pieces of thin copper attached to the vectorboard with bathtub caulk (Ge RTV). Naturally, they must be insulated from ground.

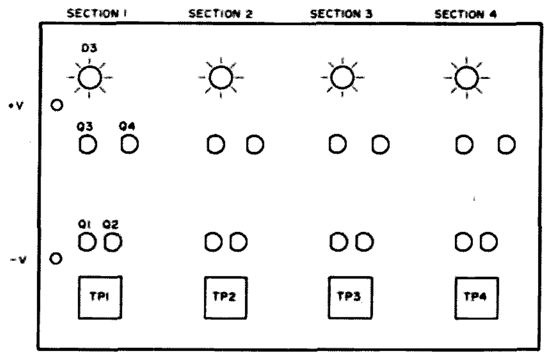

Fig. 3. Coffee flipper component layout.

Usage

The basic ground rules for using the flipper are like those for "matching pennies." For two people, both players place one finger on their individual touchplates. One says, "If they match – you buy" or "If they're alike, I buy." They count to three and at the count of three they remove their fingers from the plates and look at the two corresponding lights. For three or more players, you can play "odd-man-buys" or "odd-man-out." In the latter case, the odd man drops out and the remaining players continue. To be polite, we usually call the player who buys the "winner." After all, he wins the honor of buying!

Results

Some questions have been raised by frequent "winners" about the randomness of the results of my "coin." Even I wondered because I "won" the first six buys. Jim Shultz W3MYK said, "It's not gambling; with Joe playing it's a sure thing!" But several runs of 50 and 100 successive trials each have demonstrated an even distribution of results. You may buy six days in a row, but if you live long enough, the game is fair. The only signs of erratic operation have occurred in the presence of rf fields or near sources of electrical transients such as relays or electric motors.

Conclusion

Many hours of man-effort have been saved in using this device. The integrity of break time as a period of relaxation has been maintained. And, because even vending machine coffee tastes better when someone else buys, I must thank Jim Shultz, Vic Frey and Daryl Kane for countless gallons of that delicious brew! ■

The Man Who Invented AC

-- Tesla, the greatest pioneer of them all!

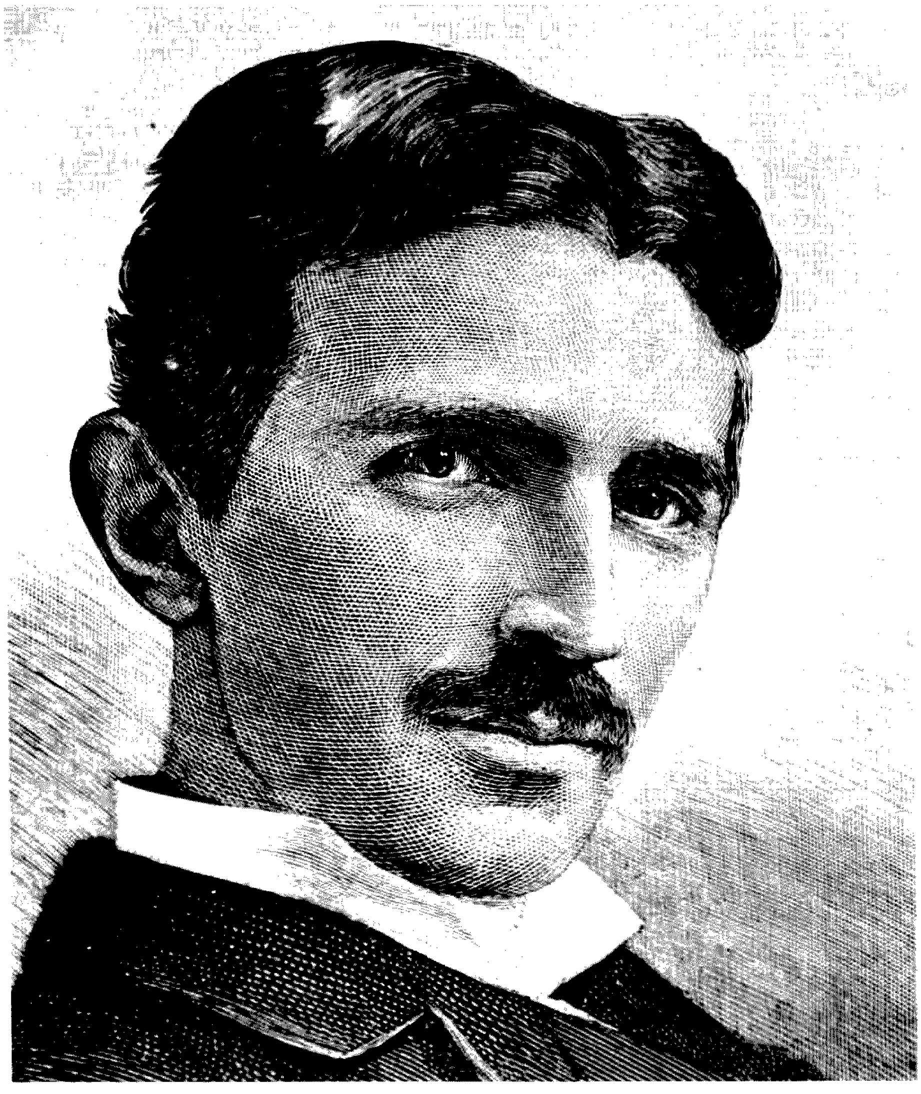

Nikola Tesla (1856–1943), the inventor whose discoveries completely changed the cadence of human progress, spent his entire life under the influence of an irresistible impulse for crossing frontiers and delving into the unknown.

Harry Goldman
34 Amy Lane
Glens Falls NY 12801

A young immigrant from Yugoslavia stirred the world of electrical engineering when, in 1888, he presented a paper, "A New System of Alternate Current Motors and Transformers," before the American Institute of Electrical Engineers (N.Y.). His discovery of the rotating magnetic field and its application to the generation, transmission and utilization of polyphase alternating currents for power and light brought electrification to the world. Every high-tension tower and transmission line bisecting the world's countrysides are lasting monuments to Nikola Tesla's genius. Not widely remembered, however, are his contributions to the establishment of early radio communications and broadcasting.

In 1889, the inventor commenced a series of investigations into the properties of high-frequency alternating currents. Except for his earlier work in low frequency ac and an occasional venture into incidental fields, high-frequency researches were to remain the dominant objective of his inventive career. Originally, it was his

ambition to utilize these currents in developing a more efficient system of lighting. Shortly thereafter, Tesla inaugurated experiments which were to place him on a trail leading to communications, a goal which eventually evolved into an obsession.

Although it is not clear what force motivated Tesla in this direction, his intense interest in radio was probably initiated as a result of Heinrich Hertz's experimental work. Finding inspiration in James Clerk Maxwell's electromagnetic wave theory, Hertz was able to transmit, receive and measure radio waves. It is without question that Maxwell's mathematical treatise, "Electricity and Magnetism," initially announced in 1864, and Hertz's "Electromagnetic Waves in Air and Their Reflections," published in 1888, formed the genesis of radio engineering.

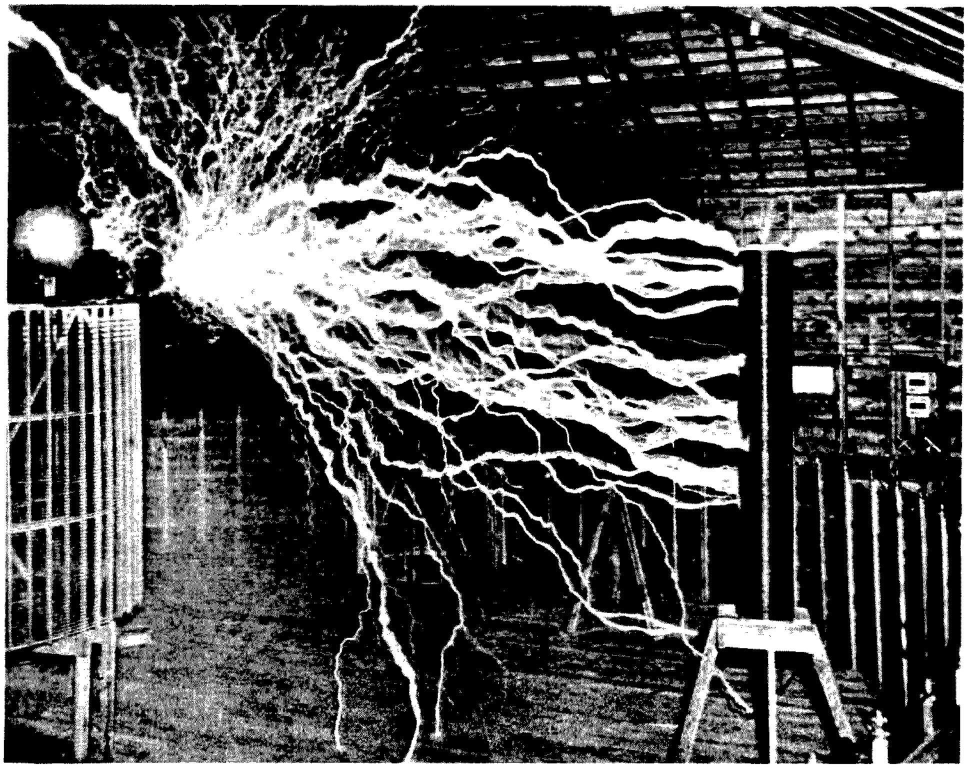

The Magnifying Transformer, the heart of Tesla's high voltage experiment for producing an immense resonant action. The cascading discharges shown here measure 22 feet and represent a potential of 12 million volts. (The Century Magazine, *June 1900)*

Although Tesla was among the earliest who foresaw the application of electromagnetic waves in point-to-point communications, he continuously contested the concept of radio transmission by Hertzian waves. He attributed communications between ground stations to earth conduction. Later, when challenged to explain transmissions between ground stations and airplanes, the inventor responded, "capacitor action." Tesla rarely wavered in this debate and it is probable that his persistent inflexibility retarded, if not prevented, proper recognition for his contributions.

By 1890, he had constructed alternators capable of producing undamped waves at 30 kHz. Some twenty years later, the radio industry, then beginning its embryonic stage, found undamped waves highly desirable. As a result, the high-frequency alternator became a sophisticated piece of equipment, holding a position of great significance in radio transmissions until the advent of the high-power triode in 1922. As a striking example of its import, it was possession of the Alexanderson alternator patents which gave RCA a nearly insuperable advantage in early global communications. Thus, Tesla's conception of employing continuous waves, and his design of apparatus for producing them, preceded the radio industry by at least two decades.

Tesla again aroused the attention of the scientific world in 1891 when he presented the first of a series of historic lectures revealing discoveries from experiments with radio frequencies.(1) Among these was the disclosure of a new kind of transformer. Better known as a "Tesla" coil, this device represented the first application of the oscillation transformer. The Tesla transformer provided a remarkable advancement in that it invoked the principle of inductively coupled tuned circuits. Consequently, in his initial approach to communications, Tesla stumbled upon another important facet, the principle of tuning. Time has not dimmed its importance.

One gains an insight into the inventor's experimental wisdom and prophetic vision through reference to a sensitive emission within his vacuum tubes. In the lecture of 1892, given before the Institution of Electrical Engineers in London, Tesla states, "I think that it may find practical applications in (wireless) telegraphy. With such a brush, it would be possible to send dispatches across the Atlantic with any speed . . ."(2) The advanced state of our present technology may blind us from sensing the impact of the inventor's declaration. At the time, several leading figures of the scientific world conceded the impossibility of traversing the Atlantic's prohibiting span with an electromagnetic wave. To Tesla, the Earth's magnitude was of little consequence. ". . . I would say a few words on a subject which constantly fills my thoughts and which concerns the welfare of all. I mean the transmission of intelligible signals or perhaps even power to any distance without the use of wires . . . we need not be frightened by the idea of distance. To the weary wanderer counting the mileposts, the Earth may appear very large; but to the happiest of all men, the astronomer, who gazes at the heavens, and by their standard judges the magnitude of our globe, it appears very small . . and so I think it must seem to the electrician . . . it certainly is possible . . . to produce some electrical disturbance

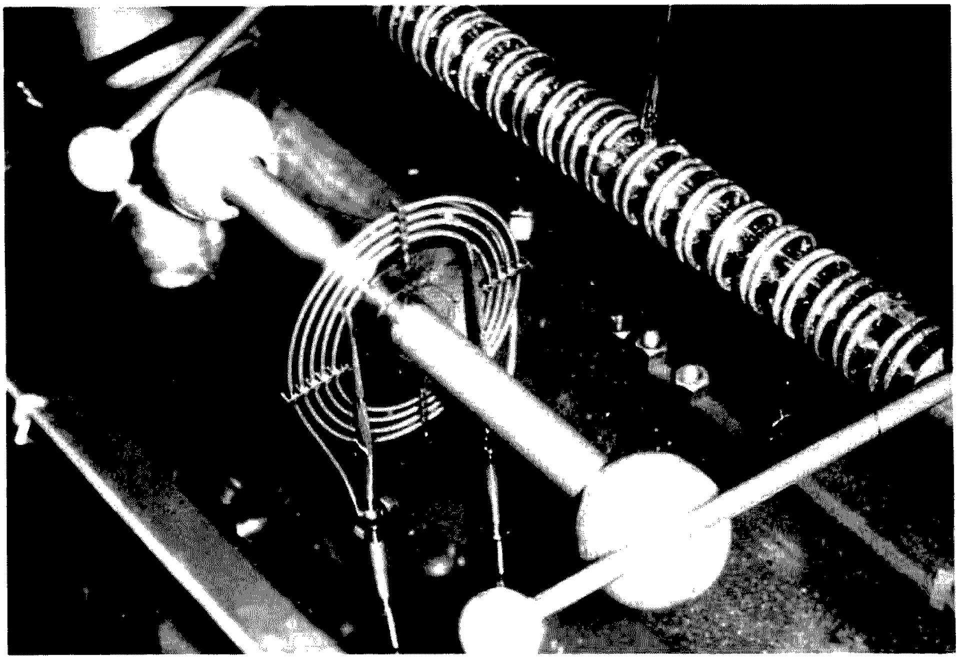

A 5 million volt Tesla coil developed for nuclear physics research in 1929 by G. Breit, M.A. Tuve, and O. Dahl. The multi-sectioned vacuum tube at the upper right was used to accelerate atomic particles. (Photo courtesy of T. Brown, Dept. of Terrestrial Magnetism, Carnegie Institution of Washington)

sufficiently powerful to be perceptible by suitable instruments at any point of the Earth's surface." (3)

In his final lecture of the "trio-series," Tesla suggested a system of radio communications employing synchronized aerial-ground elements at the transmitting and receiving stations.(4) In view of this disclosure, it would seem that he was the first to conceive the idea of using transmitting and receiving antennas tuned to the same frequency. Therefore, by 1893, some four years before contemporaries had made equally significant contributions to the art, it appeared that Tesla possessed both the technology and ambition as well as the visionary powers necessary for bringing radio communications to its fruition. What impediment barred him from achieving the honor?

On March 13, 1895, Tesla experienced a serious setback. The entire contents of an inventive career, as well as records, documents and a world's fair exhibit were lost when a fire destroyed his New York City experimental station. Undoubtedly, the tragedy barred Tesla from establishing priority in several fields. His position in the world of science was evaluated by an article in the *New York Sun*. "The destruction of Nikola Tesla's workshop with its wonderful contents is something more than a private calamity. It is a misfortune to the whole world. It is not in any degree an exaggeration to say that the men living at this time who are more important to the human race than this young gentleman can be counted on the fingers of one hand – perhaps on the thumb of one hand."(5)

Tesla opened a new laboratory. By 1897, he had carried out investigations in the field of x-ray, studies of the dynamics of mechanical vibrations, the invention of electromechanical isosynchronous alternating-current generators as well as experiments with radio-controlled devices. One of his important contributions of this period was a high-frequency patent containing the fundamental principles upon which the "four-tuned-circuit system" of radio transmission was to be founded.(6) Professor Adolph Slaby, Germany's leading authority in early communications, demonstrated an enthusiastic appreciation for Tesla's work. In declaring Tesla as the "Father of Wireless," he wrote, "I have been engaged for some time in investigations in telegraphy without wires, which you have first announced in such a clear and precise manner in your 'inventions.' It will interest you as the father of this telegraphy . . ."(7)

Restricted by the limits of his New York laboratory, Tesla left for Colorado Springs in 1899 to initiate experiments on a large scale. Communications was to be but one phase of his project. Another was the transmission of electricity without the use of power lines. He was of the conviction that resonant effects of huge magnitude would enable him to utilize the Earth as a conductor. "Not only was it practicable to send telegraphic messages to any distance without wires," stated Tesla, ". . . but also to impress upon the entire globe the faint modulations of the human voice; far more still, to transmit power in unlimited amounts to any terrestrial distance and almost without loss."(8)

There, in the shadows of Pike's Peak, he constructed a large barn-like laboratory. Extending through the roof was a 200-foot mast topped by a 3-foot copper ball. Within the mysterious construction was an array of apparatus reminiscent of a Jules Verne fantasy. It was Tesla's intention to employ the equipment in an attempt to alter the electrical charge of the Earth.

The concrete achievements of the Colorado adventure remain obscure. Except for a lecture, some scattered notes, and a few ambiguous articles, he never fully disclosed the outcome of the experiment. He announced the discovery of standing waves induced in the Earth's static charge by nature's lightning and was able to duplicate them by bringing about an immense resonant action. In an experiment which has not since been equaled, Tesla produced the longest point-to-point man-made lightning discharges (135 feet) with an absolute potential of 18 million volts and antenna currents of 1,100 Amperes. This, and his ability to operate Earth-connected motors and electric lamps at a distance of eighteen miles from the source of energy, must be recorded as remarkable feats of engineering.

Tesla demonstrated the vision of a true prophet when he suggested the employment of standing waves as a means for detecting the position and movement of distant objects. "... By their use ... we may determine the relative position or course of a moving object such as a vessel at sea ..."(9) It wasn't until just before World War II that radar, as foretold by Tesla, became a working reality.

Upon his return to New York in 1900, Tesla began construction of a transmitting plant on Long Island. Residents of early Shoreham can recall the gigantic tower situated on a tract of land known as Wardenclyffe. The station was to be but one of a series of components making up Tesla's "World System" of broadcasting. In addition to the distribution of news, music and humanity services provided by today's communications media, the inventor promised a number of startling benefits. It was to establish a universal system of telephone, telegraph and stock ticker services; a precision clock system whereby all the world's timepieces would be accurately synchronized from a master station; a safe system of navigation enabling control of direction without compasses and an ability to determine exact location, hour and speed at a moment's notice. Also, it was to provide a world system of private communications allowing personal telephone connections between parties, regardless of distance, with a device small enough to be carried in one's pocket.

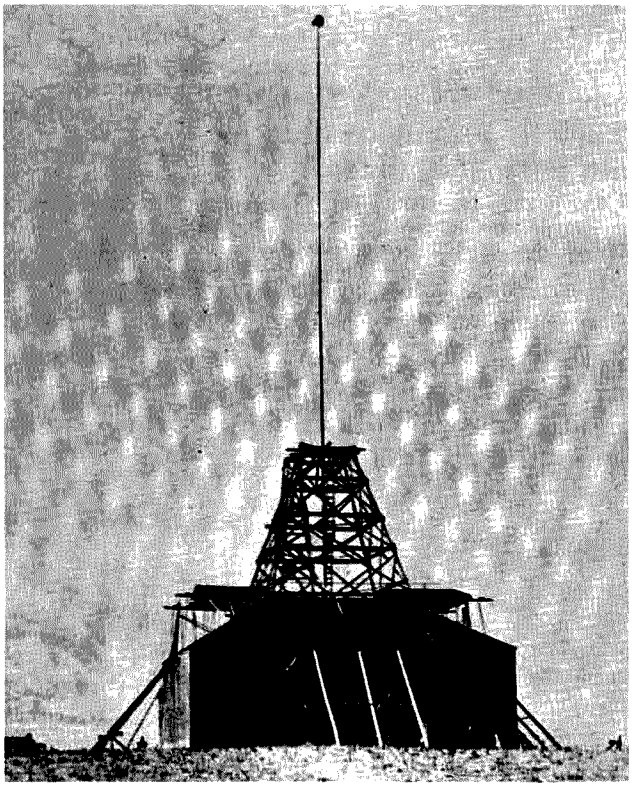

An external view of Tesla's mysterious experimental laboratory at Colorado Springs. Erected in 1899, the inventor undertook experiments to alter the electrical charge of the Earth. He produced discharges that rivaled nature's lightning bolts and revealed the presence of standing waves in the Earth. (The Electrical World and Engineer, *March 5, 1904)*

The Long Island plant was never completed. The cost of the project exceeded the inventor's available funds. The greater part of Tesla's endeavors were financed by private sources. John Jacob Astor, J. P. Morgan and Thomas Fortune Ryan can be cited as the most influential of Tesla's creditors. In addition, a demonstration of the feasibility of the "World System" principle was hampered by the complexity of a recurring illness. The tower remained intact for many years. Shrouded in an atmosphere of mystery, it proved to be but a landmark in evidence of the bold dreamer who had passed that way. The late John J. O'Neill, *New York Herald-Tribune* Science Editor, provided a description of its demise in his biography *Prodigal Genius, The Life of Nikola Tesla.* "... Heavy charges of dynamite were necessary in order to topple it, and even then it remained intact on the ground like a fallen Martian out of Wells' *War of the Worlds.*"

In an objective which no other person had then dreamed possible, Tesla had visualized, and nearly created, broadcasting some twenty years preceding its eventuality. "Of course," stated Edwin H. Armstrong, radio pioneer and inventor of FM, "the instrumentalities for practicing broadcasting were not then in existence. Tesla was classed as a visionary and his prophecy was forgotten. What harsher terms might, with justice, be applied to many of us who helped produce the instrumentalities with which broadcasting was eventually accomplished! We applied them to point-to-point communications, failing completely to realize the significance of Tesla's words."(10)

In addition to the major goals mentioned herein, Tesla made an infinite variety of contributions to communications that remain generally unknown. The most striking example is a patent describing an invention for controlling moving objects by radio waves.(11) With this invention, Tesla singularly ushered in the age of radio-guidance systems. "We shall be able ... to send a projectile at a much greater distance; it will not be limited in any way, weight or amount of explosive charge; we shall be able to submerge it at command, to arrest it in its flight and call it back, and to send it out again and explode it at will; and more than this, it will never make a miss ..."(12) Spectacular demonstrations of his radio-controlled device were presented in a week-long display at Madison Square Garden (N.Y.) and again, later, in Chicago. But to Tesla, this was just the beginning. In a gesture true of his unlimited imaginative powers, he proposed radio-controlled robots capable of thinking for themselves. He coined them *automatons.* "... It will be able to follow a course laid out or to obey orders given far in advance; it will be capable of distinguishing between what it ought and what it ought not to do ..."(13) Tesla's utterances raised more than the eyebrow of the scientific world. Resulting protests surpassed the discontent of indignation. The significance of Tesla's words, however, becomes more apparent when we consider today's vast industry of self-thinking machines as well as the huge arsenal of radio-guidance missiles poised at their stations throughout the world. These devices are able to perform exactly as Tesla had predicted.

Among his incidental contributions to radio communications was the Tesla "ticker," a device for

making continuous waves audible. This apparatus was a vital part of the Paulsen Arc stations until the heterodyne beat-note system was introduced to radio engineering. Several forms of Tesla's high-frequency spark apparatus were utilized by early transmitting stations for many years. His radio patents advanced the quarter-wave principle as well as antennas in the form of a loop. And it was Tesla who pointed out the importance of oil as an insulating medium in high-voltage equipment and who suggested the use of insulated stranded wire, later called Litzendraht, in high-frequency circuits.

Taking into consideration all that has been mentioned in the foregoing, why then is the name of Nikola Tesla not listed among the journals of radio engineering history? Several explanations are possible. For one, Tesla was a complex personality. "He was a strange figure in the rough-and-tumble field of pioneer wireless and electricity," wrote one who met Tesla. "Many considered him a plain snob. Some called him a nut while others referred to him as the 'genius' and were always making excuses for his actions ..."(14) Hampered by a grand-gesture personality and driven by an extraordinary ingenuity, his talents remained eternally subservient to a passionate and inexorable urge for stirring deep waters. Consequently, his mental capacities continually outraced his physical ability for bringing original ideas to a real existence. His pattern appears to have been to discover, and then move onwards leaving for others the benefits of its commercial application. And in his experimental processes, he was forever being diverted from the path of his major goals (as is evident by the variety of his inventive accomplishments) delaying, if not preventing, final achievement of his original destinations.

There should be little doubt concerning the inventor's faculties for establishing a communications system. Its reality, however, proved to be too great a task, both physically and economically, for the efforts of an individual. Had he been associated with talent similar to the likes of a David Sarnoff, that energetic personality who brought the "music box" (radio) into every home and who led the Radio Corporation of America to communications history, his objective might have been assured.

Fritz Lowenstein, an assistant in his high-voltage experiment, and who later produced some excellent work in radio communications, if given a chance, might have served Tesla to great advantage. Lee De Forest, an inventor whose contributions are well established in the glorious history of radio, pleaded to be taken in as a Tesla assistant. Without detracting from their brilliant work, it is known that the many successes of men such as Edison and Marconi resulted from their ability to attract the assistance of highly capable associates. Tesla, however, was unable by temperament to avail himself of this advantage. Essentially, he was a "loner" who stood aloof and out of reach of those with whom he mingled.

On December 12, 1901, while Tesla was constructing his 300,000 Watt Long Island broadcasting station, Guglielmo Marconi, with but a fraction of that power, scooped the scientific world by sending three dots from Poldhu, England, to Saint John's, Newfoundland. The scientific society hailed Marconi. Even Tesla sent a congratulatory note but it was quite evident that he had

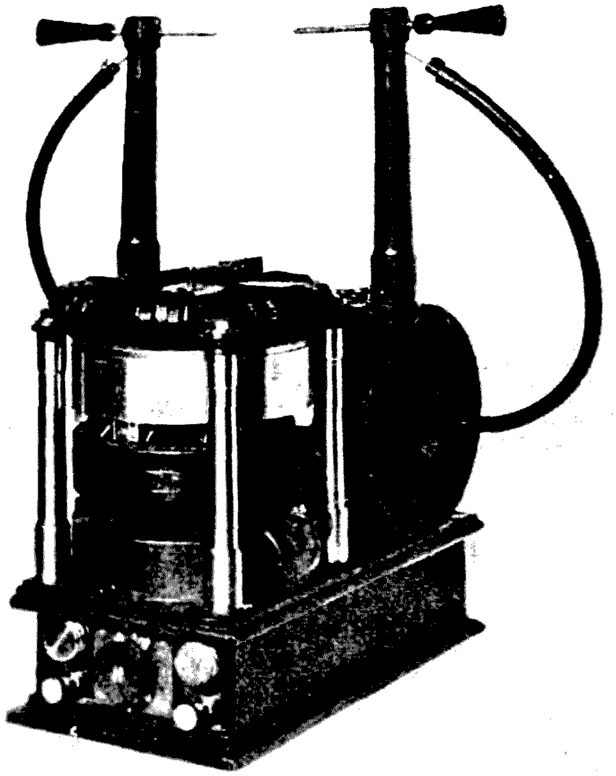

An early Tesla coil, the only invention of his many contributions which still bears his name. Tesla used devices such as these to carry out researches with high frequency alternating current. His discoveries hastened the development of ac induction heating, diathermy, neon and fluorescent lighting, x-ray equipment and techniques, and radio guidance systems, as well as television and radio communications. (Electrical Experimenter, *July 1919, by permission of Hugo Gernsback*)

been struck a blow by Marconi's feat. A crushing defeat to Tesla's bid for radio immortality came about in 1915 when he battled Marconi over the fundamental issues upon which early radio had become established. The courts ruled against Tesla, a judgment which was to influence succeeding litigation as well as to provide Marconi the means with which to institute unmitigated assertions for the invention of radio.

In his book, *Marconi*, Orrin E. Dunlap, Jr., provides an interesting comment. "At the turn of the century it was remarked that it was difficult to invent anything basically new in radio, and still more difficult to invent anything which did not have some bearing on or had not been preceded by an invention of Nikola Tesla. In 1891, at Columbia University, Tesla demonstrated the principle of tuning. He obtained patents on tuned circuits and claimed more than 100 tuning inventions. Nevertheless, it is called Marconi wireless; not Tesla wireless."

Be all that as it may, Tesla's part in the evolution of communications was not to be denied completely. In the October sessions of 1942 and 1943, the Supreme Court declared the Marconi "four-tuned-circuit" patent, his most vital contribution, invalid because of prior disclosure by Tesla, Stone and Lodge.(15)

In summation, we find in

Nikola Tesla a personality possessing an experimental acuity and prophetic vision equaled by no more than a handful of colleagues and surpassed by none. That he contributed to the groundwork of radio communications is evident through an examination of his lectures, articles and inventions pertaining to the subject. Although once hailed as "Our Foremost Electrician . . . Greater Even Than Edison," Tesla's accomplishments have since faded from the indexes of printed matter.(16) Consequently, it is possible – though not probable – for an engineering student to complete a formal education without having heard of Tesla.

In an evaluation of the inventor's contributions to radio engineering, L. P. Wheeler credits Tesla with the independent discovery of the principle of inductive coupling between the driving and working circuits, the importance of tuning both circuits, that is, the idea of an oscillation transformer, and the employment of the capacitance loaded open secondary circuit. He describes Tesla as "... an immensely energetic personality possessing great skill in ac techniques and great ingenuity in their utilization ... his earlier accomplishments . . . together with the inspiration given to many through his public lectures, would seem to justify a place in the history of radio engineering not so very far below that due to his accomplishments in the field of low-frequency alternating currents." (17) ■

References

(1) Nikola Tesla, "Experiments With Alternate Currents of Very High Frequency and Their Application to Methods of Artificial Illumination." A lecture before the American Institute of Electrical Engineers, N.Y., May 20, 1891.
(2) Nikola Tesla, "Experiments With Alternate Currents of High Frequency." A lecture before the Institute of Electrical Engineers, London, February, 1892.
(3) Nikola Tesla, "On Light and Other High Frequency Phenomena." A lecture before the Franklin Institute, Philadelphia, February 1893, and before the Electric Light Association, St. Louis, March, 1893.
(4) Ibid.
(5) Charles A. Dana, *New York Sun*, March 13, 1895.
(6) Nikola Tesla, "Method of Regulating Apparatus for Producing Currents of High Frequency," United States Patent 568,178, September 22, 1896.
(7) Professor Adolph Slaby in a letter to Tesla, December 1, 1898. Original in Nikola Tesla Museum, Beograd, Yugoslavia.
(8) Nikola Tesla, "The Transmission of Electrical Energy Without Wires," *The Electrical World and Engineer*, March 5, 1904.
(9) Nikola Tesla, "The Problem of Increasing Human Energy," *The Century Magazine*, June 1900.
(10) Edwin H. Armstrong, "Tribute To Tesla," *Scientific Monthly*, April 1943.
(11) Nikola Tesla, "Method of and Apparatus for controlling Mechanism of Moving Vessels or Vehicles," United States Patent, 613,809, November 8, 1898.
(12) Nikola Tesla, "Tesla And His Work," *New York Sun*, November 21, 1898.
(13) Nikola Tesla, "The Problems of Increasing Human Energy," *The Century Magazine*, June 1900.
(14) Personal communication from John Oliver Ashton, October 15, 1954.
(15) *United States Reports, Marconi Wireless Telegraph Co. vs. United States*, Volume 320, October terms of 1942/1943.
(16) Arthur Brisbane, "Our Foremost Electrician," *The World* (N.Y.), July 22, 1894.
(17) L. P. Wheeler, "Tesla's Contribution To High Frequency," *Electrical Engineering*, New York, August 1943.

Baudot to ASCII

-- you want to learn programming?

Mark J. Borgerson
325 N.W. 9th, #3
Corvallis OR 97330

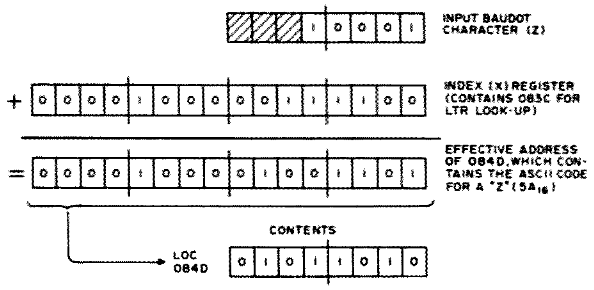

Fig. 1. Example of generating the effective (final) address to the correct ASCII code by adding the input Baudot code with the contents of the Index Register.

One of the most enlightening (but little used) methods for learning programming techniques is to read someone else's programs. Therefore, let us suggest you look over this article even if you aren't interested in Baudot to ASCII conversion. And if the symbolic coding in the listing seems to be a problem, don't let it be — simply analyze the machine language code. — Ed.

This program is used to convert 5-bit Baudot code from a parallel input into ASCII characters and display those characters. The program is written to run in a Southwest Technical Products 6800 microcomputer with a parallel interface located at memory location 8016 (hexadecimal notation). The program uses the output subroutine OUTEE, which is resident in the system's MIKBUG® operating system. Total program length, including the lookup table, is 123_{10} bytes. Because of the indexed lookup routine used, the routine is not suitable for permanent storage in ROM. The program may be located anywhere in memory space if the references to location LTRLOC and FIGLOC are changed to agree with the new locations.

The program operates by reading the parallel input port (after appropriate initialization) and looping until bit 7 goes high, indicating a character is present in bits 0-4. Bits 5-7 are masked out and the resultant 5-bit pattern is stored in location LOOKUP+1 where it becomes the displacement added to the index register. The index register contains either a pointer to the FIGURES or the LETTERS lookup table, depending upon which of

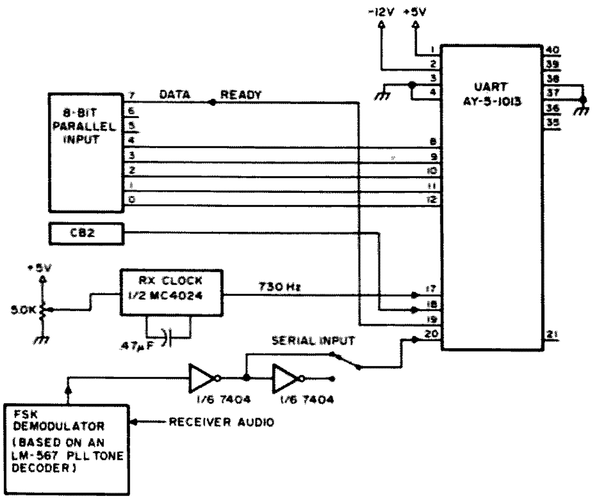

Fig. 2. Baudot to ASCII Conversion hardware configuration. Notes: CB2 is a handshake control output from the PIA. This output is under program control and is used to reset the UART after the word is read. Resetting the UART drives the DATA READY line low until the next complete data word is available.

LABEL	ADDRESS	CONTENTS	CHARACTER	LABEL	ADDRESS	CONTENTS	CHARACTER
LTRLOC	083C	00	NULL	FIGLOC	085C	00	NULL
	3D	45	E		5D	33	3
	3E	0A	LF		5E	0A	LF
	3F	41	A		5F	2D	-
	0840	20	SPACE		0860	20	SPACE
	41	53	S		61	27	'
	42	49	I		62	38	8
	43	55	U		63	37	7
	44	0D	CR		64	0D	CR
	45	44	D		65	24	$
	46	52	R		66	34	4
	47	4A	J		67	00	BELL
	48	4E	N		68	2C	,
	49	46	F		69	21	!
	4A	43	C		6A	3A	:
	4B	48	K		6B	28	(
	4C	54	T		6C	35	5
	4D	5A	Z		6D	22	"
	4E	4C	L		6E	29	)
	4F	57	W		6F	32	2
	0850	48	H		0870	23	#
	51	59	Y		71	36	6
	52	50	P		72	30	0
	53	51	Q		73	31	1
	54	4F	O		74	39	9
	55	42	B		75	3F	?
	56	47	G		76	26	&
	57	00	FIGS		77	00	FIGS
	58	4D	M		78	2E	.
	59	58	X		79	2F	/
	5A	56	V		7A	3B	;
	5B	00	LTRS		7B	00	LTRS

Table 1. Baudot to ASCII Lookup Table. Note: The locations corresponding to LTRS and FIGS contain NULLS (00) since these functions are taken care of outside the lookup table. The location for BELL is also a NULL since my terminal does not have this function.

these control characters was last received. The program automatically loads the location of the FIGURES table upon startup.

After the Baudot character has been read and stored, the reset subroutine outputs a short positive pulse to the UART used to convert the serial Baudot characters to parallel form. This pulse clears the UART parallel output register and readies it for the next word. The reset pulse is output via the CB2 control output of the parallel interface.

When the Baudot character has been stored as the index displacement, the appropriate ASCII character is fetched from the lookup table (using this index) and read into accumulator A (see Fig. 1). The program then outputs the character via the OUTEE subroutine to the computer control terminal (a CT-1024 TVT in my case). The program then branches back to the input step to wait for the next character.

The program does not incorporate an automatic "unshift on space or CR," so a missed LTRS command will result in a continued string of figures. This can be overcome by storing the program starting location at memory locations A006 and A007$_{16}$. These are the non-maskable interrupt vector locations. A push-button to ground on the computer's NMI line will cause the program to restart, automatically shifting to the LTRS lookup table. ■

```
1
   MC6800 ASSEMBLER    V1.0    NONAME    76/05/15    10.38.03    PAGE 01
0
                              * BAUDOT TO ASCII CONVERSION PROGRAM
                              * FOR SWTPC 6800 COMPUTER.
                              * ACCEPTS 5-BIT BAUDOT CODE IN PARALLEL FROM
                              * UART AND CONVERTS TO ASCII AND DISPLAYS.
                              *
                    0800               ORG    $0800
      0800   8D     IC                 BSR    PINIT       INITIALIZE
      0802   CE     083C               LDX    =LTRLOC     POINTER TO LTRS
      0805   8D     27        INPUT    BSR    CHARIN      GET CHARACTER
      0807   81     1B                 CMPA   =$1B        CHECK FOR "FIGS"
      0809   26     03                 BNE    NEXT
      080B   CE     085C               LDX    =FIGLOC     SET PNTR TO FIGS
      080E   81     1F        NEXT     CMPA   =$1F        CHECK FOR "LTRS"
      0810   26     03                 BNE    LOOKUP      DO TABLE LOOKUP
      0812   CE     083C               LDX    =LTRLOC     SET PNTR TO LTRS
      0815   A6     00        LOOKUP   LDAA   &00         INDEXED LOOKUP
      0817   BD     E1D1               JSR    OUTEE       OUTPUT CHARACTER
      081A   8D     07                 BSR    RESET       RESET UART
      081C   20     E7                 BRA    INPUT       START NEXT CHAR.
                              * SUBROUTINE PINIT - INITIALIZES INTERFACE
                              *
      081E   86     00        PINIT    LDAA   =00         SET UP 8-BIT INPUT

      0820   B7     8016               STAA   PIADRB
      0823   86     3C        RESET    LDAA   =$3C        SET CB2 HIGH
      0825   B7     8017               STAA   PIACRB
      0828   86     34                 LDAA   =$34        SET CB2 LOW
      082A   B7     8017               STAA   PIACRB
      082D   39                        RTS
                              *
                              * SUBROUTINE CHARIN WAITS FOR CHARACTER
                              * TO APPEAR AT INPUT. CHARACTER IS READY WHEN
                              * BIT 7 OF INPUT GOES HIGH.
                              *
      082E   B6     8016      CHARIN   LDAA   PIADRB      LOAD FROM UART
      0831   85     50                 BITA   =80         TEST BIT 7 SET?
      0833   27     F9                 BEQ    CHARIN      NO, LOAD AGAIN
      0835   84     1F                 ANDA   =$1F        REDUCE TO 5 BITS
      0837   B7     0816               STAA   LOOKUP+1    STORE AS IDX DISP.
      083A   39                        RTS                RETURN TO
      083B   39               EXIT     RTS                RETURN TO PGM
      083C          0020      LTRLOC   RMB    32
      085C          0020      FIGLOC   RMB    32
                    E1D1      OUTEE    EQU    $E1D1
                    8016      PIADRB   EQU    $8016
                    8017      PIACRB   EQU    $8017
                              * END PROGRAM.
      087C                             END
1  SYMBOL TABLE
   CHARIN     082E    EXIT     083B    FIGLOC     085C
   INPUT      0805    LOOKUP   0815    LTRLOC     083C
   NEXT       080E    OUTEE    E1D1    PIACRB L   8017
   PIADRB L   8016    PINIT    081E    RESET      0823
-
   FATAL ERRORS = 0   WARNING MESSAGES = 0
```

Table 2. Program. Notes on Assembler code: "=" before operand indicates immediate mode; "$" indicates hexadecimal number; default is decimal; "&" before number indicates indexed addressing mode.

John Arnold W5CUD
RFD 4, Box 52A
Tyler TX 75701

Dick Whipple
305 Clemson Dr.
Tyler TX 75701

Baudot and BASIC

-- an interpreter for a Baudot computer

In previous articles of this series, we have attempted to demonstrate that Baudot teletype equipment can perform the input/output function in a hobby computer system. In the first article, a simple and inexpensive interface to bring a Baudot Model 19 on-line with an Intel 8080-based computer was described. The second article concerned the use of Baudot paper tape equipment for storage of data. In the third article, a system program called the Baudot Monitor/Editor (BM/E, for short) was presented. BM/E made it possible to enter, modify, and execute machine language programs via the Baudot printer/keyboard. Throughout, we have tried to keep hardware requirements to a minimum and thus encourage readers to get their old Baudot equipment up and running. As a further inducement along this line, we now present a high level language software system for use with Baudot equipment, but before we get the cart before the horse, perhaps we should back up and discuss computers and high level languages in general terms.

What is a High Level Language?

Computers are sometimes referred to as "thinking machines." In actual fact, the "thinking" is done by a human long before the computer is put to work. The computer merely performs a logical sequence of well-defined operations that are predetermined to achieve the desired results. On the lowest level, these operations consist simply of the computer's machine language instruction set. Working at this level requires an understanding of binary arithmetic, data encoding, I/O handling, memory allocation, and a number of other machine-related concepts. For those who do not have this specialized knowledge, or who simply want to avoid the intricacies of working at the machine level, a different approach is needed. Over the years, many efforts have been made to develop machine language programs to help humans achieve better working compatibility with computers. We might think of these programs as providing a computer/human interface. In most such software systems, decimal arithmetic is implemented to avoid the difficulties associated with machine level binary. In addition, ordinary words and alphabetic symbolism are adopted for use in directing

John Arnold W5CUD.

Dick Whipple.

Byte No.	
1 and 2	Binary value of label; most significant part in 1
3	Length of text plus 2 in binary
4 through N	Text of line
N + 1	CR (015 octal)

Fig. 1. A program line as stored by TBX.

the computer's operation. This relieves the need for using the machine's purely numerical instruction code. The authors of these software systems (through their choice of the words and symbolisms) created what is referred to as a high level language.

Many different languages of this type have been developed to meet the needs of different potential users. FORTRAN, with its mathematical orientation, has become the principal language for scientists and engineers. Another high level language, COBOL, has achieved stature in the business world because of its good file management capabilities. Still another language which has gained wide use is BASIC. As the name implies, BASIC was intended for people just getting started in computers. Its simple and convenient operational features make it a natural "learner's language." It would take pages to recount all of the high level languages that are in use — or have faded from the scene. But it's important to note that the existence of these software systems has done much to further the wide acceptance and use of computers.

Why Learn a High Level Language?

Although there are perhaps dozens of good reasons for learning a high level language, most derive from this one fact: High level languages are people-oriented, while low level languages are machine-oriented. People are far better able to utilize the capabilities of the computer if they are not burdened by the details of machine level operation. In addition, high level languages are not machine-dependent, as are low level languages. For instance, suppose you learn BASIC on a Data General Nova and then wish to use another machine like the Altair 8800. No problem. BASIC is fairly well standardized from machine to machine. Of course, on the machine level, the Nova and Altair are vastly different. But on your side of the software interface, both systems appear the same. Learning a high level language like BASIC will greatly extend the usefulness of your computer, and at the same time broaden your future capabilities!

What is a BASIC Program?

Humans perform tasks very often without clearly recognizing the steps involved. Computers, on the other hand, cannot perform even the simplest task without having the steps precisely set out beforehand. It is this fundamental weakness of present-day computers that make them need us! We call this step description process "programming." Contrary to what you might think, programming in a high level language does not require a massive learning effort on your part. A reasonably competent sixth grader will have already acquired the knowledge required to understand what a computer does. The problem simply reduces to learning how to make the computer do it! This is where BASIC comes in. BASIC consists simply of a group of commands or instructions that you arrange in a particular order to perform the required task. To become a

```
:LST

00010 PR"## NUMBER GUESSING GAME ##"
00020 PR$PR
00030 LET A:RN
00035 LET C:O
00040 PR"I HAVE A NUMBER. TRY TO GUESS IT."
00050 PR"HERE WE GO . . . BY THE WAY THE NUMBER"
00060 PR"IS BETWEEN 1 AND 10000."
00070 LET C:C&1$PR"YOUR GUESS";$IN B
00080 IF B : A GOTO 150
00090 IF B ) A PR$PR"TOO LARGE. TRY AGAIN."$GOTO 70
00100 IF B ( A PR$PR"TOO SMALL. TRY AGAIN."$GOTO 70
00150 PR"THAT IS IT. YOU TOOK ";C;" TRIES."$PR
00160 PR"NEW GAME"$GOTO 20
```

Fig. 2. Listing of TBX number guess game.

good programmer, you must think through a task a step at a time, recognizing at each which BASIC command should be used to accomplish it. If you are unaccustomed to this type of problem-solving, you may find it difficult at first. However, as time goes on, you will no doubt find this careful point-by-point analysis of a given task a very satisfactory approach to problem-solving, both on and off the computer.

Where To Get the Basics of BASIC

People have written entire books describing the BASIC language. It would hardly be possible to adequately reduce such volumes to one or two paragraphs. The best we can do here is to list the names of some books that will provide detailed discussion. Table 1 includes a list of recommended books and their possible sources. For the real greenhorn, we highly recommend the small book entitled, *My Computer Likes Me When I Speak BASIC.* From this you can gradually work up to some of the more comprehensive books.

In addition to a book, you will need a BASIC operating system for your computer. That's where TINY BASIC EXTENDED comes in!

The TINY BASIC Project

In mid-1975, a project was started in the pages of *People's Computer Company* (PCC) *Magazine* to foster the creation of a small BASIC software system for hobby computers. The term "TINY BASIC" was coined for the system. The project culminated in the creation of a new software journal profusely entitled, *Dr. Dobb's Journal of Computer Calisthenics & Orthodontia.* Credit is due here to Bob Albrecht and others on his staff for encouraging the development of TINY BASIC and providing for its availability to hobbyists. We wrote the first version of TINY BASIC, and a complete description of the ASCII version appears in Volume 1, Numbers 1 and 2, of *Dr. Dobb's Journal.* Because our version had some features not included in the original design, we termed it TINY BASIC EXTENDED, or TBX for short. A Baudot version of TBX was also developed, and its description

1. *My Computer Likes Me When I Speak BASIC,* Bob Albrecht, 1972, $2.00.*,**
2. *BASIC,* Bob Albrecht and others, 1973, $3.95.*,**
3. *BASIC Programming,* Kemeny and Kurtz, 1971, $6.95.**
4. *BASIC BASIC,* James S. Coan, 1970, $3.95.**

Sources:

*73 *Magazine,* Peterborough NH 03458.
**PCC, PO Box 310, Menlo Park CA 94025.

Table 1. Books about BASIC.

```
:RUN

## NUMBER GUESSING GAME ##

I HAVE A NUMBER. TRY TO GUESS IT.
HERE WE GO . . . BY THE WAY THE NUMBER
IS BETWEEN 1 AND 10000.
YOUR GUESS ? 5000
TOO LARGE. TRY AGAIN.
YOUR GUESS ? 2500
TOO LARGE. TRY AGAIN.
YOUR GUESS ? 1250
TOO SMALL. TRY AGAIN.
YOUR GUESS ? 2000
TOO LARGE. TRY AGAIN.
YOUR GUESS ? 1600
TOO LARGE. TRY AGAIN.
YOUR GUESS ? 1400
TOO SMALL. TRY AGAIN.
YOUR GUESS ? 1500
TOO SMALL. TRY AGAIN.
YOUR GUESS ? 1550
TOO LARGE. TRY AGAIN.
YOUR GUESS ? 1525
TOO SMALL. TRY AGAIN.
YOUR GUESS ? 1535
TOO SMALL. TRY AGAIN.
YOUR GUESS ? 1545 THAT IS IT. YOU TOOK 11 TRIES.

NEW GAME

I HAVE A NUMBER. TRY TO GUESS IT.
HERE WE GO . . . BY THE WAY THE NUMBER
IS BETWEEN 1 AND 10000.
YOUR GUESS ?
```

Fig. 3. Execution of number guess game.

Standard BASIC	TBX	Example
LET	LET	LET A:B&C
PRINT	PR	PR"ANSWER", A;B
GOTO	GOTO	GOTO 100 GOTO A/B
GOSUB	GOSUB	GOSUB 5000
RETURN	RET	
IF	IF	IF A (: B GOTO 100
INPUT	IN	IN A,B,C
DIM(DIMENSION)	DIM	DIM A(10), B(10,C)
FOR,NEXT	FOR,NXT	FOR 1:1 TO B A = I NXT I
NEW	NEW	CLEARS PROGRAM AREA
LIST	LST	LISTS PROGRAM AREA LST ALL OF PROGRAM LST 100 Line 100 only LST 100,200 Line 100 Thru 200
RUN	RUN	Begins execution of Program
SIZE	SZE	PRINTS SIZE OF PROGRAM AND MEMORY REMAINING

Variables restricted to one letter of alphabet.

Table 2. TBX instruction set.

follows in the remaining sections of this article.

A General Description

TBX is a small BASIC interpreter for use on an Intel 8080-based hobbyist system. It occupies the lower 3.2K of memory, so that one 4K memory board provides enough room for TBX and a BASIC program. The BASIC program is stored by line number in source form, i.e., the BASIC text is stored directly in Baudot. When the program executes, TBX scans the lines in numeric order and interprets the Baudot code. By "interpret," we simply mean that the computer determines which instruction is represented by the stored Baudot character string and then proceeds to carry it out. Fig. 1 shows how a line of TBX is stored. Further discussion of how TBX works can be found in Volume 1, Numbers 1 and 2, of *Dr. Dobb's Journal.*

Table 2 summarizes the instruction set available with TBX. An example is given with each, to help you see how the instruction is used. If a TBX instruction follows a line number, it will be entered into memory for later execution as part of the overall program. An instruction entered without a line number is executed directly. You may want to use this direct mode to become familiar with the TBX instruction set. Note that all arithmetic is integer and modulo 2^{15}, which means numbers cannot exceed ±32,767. This may seem like a limitation, but you will be surprised at the tremendous variety of programs that can be written within the framework of integer arithmetic.

TBX – The Baudot Version

The use of Baudot poses a few problems which must be overcome before a system like TBX can be implemented. As we mentioned in an earlier article, the Baudot machine uses a mechanical flip flop to change case. This means that the Baudot code for upper and lower case characters is the same; the physical position of the typing basket determines which will be printed. This mode of operation is unsatisfactory for high level language application, because it would lead to a code ambiguity within the computer. To overcome this difficulty, it is necessary to use an additional bit to indicate the case of the teletype. This produces the so-called 6 level Baudot code. Our May, 1976, article included a table of this code. The computer is given the task of keeping up with the case and seeing that the proper code is set internally. The TBX user merely enters the characters on the keyboard using the FGS and LTR keys as required. The computer does the rest!

Another problem arises because of the limited character set available in Baudot. A standard Baudot keyboard does not include the important symbols like "-", "+", and "*", among others. Some allowance has to be made for this if TBX is to be useful for calculation purposes. Table 3 shows the equivalences accepted by TBX for the missing symbols. Where there is a possibility of ambiguity, the computer understands which symbol is meant by content.

Conventional Symbol		TBX
=	(Equal)	: (Colon)
<	(Less Than)	((Open Parenthesis)
>	(Greater Than)	) (Closed Parenthesis)
+	(Plus)	& (Ampersand)
*	(Asterisk: Multiplication)	# (Pound)
-	(Minus Sign – Subtraction and Negation)	Same
/	(Slash Sign – Division)	Same
$	(Dollar Sign – Strings)	$ (Same – Line Statement Separator)

Table 3. Baudot symbol equivalences.

TBX – An Operational Description

In line oriented language like BASIC, programs are stored as a collection of num-

bered lines and then executed in numerical order. One of the great features of BASIC (and TBX, too) is the convenient method of line entry and editing. A line is entered by simply typing the line number followed by the line text and a Carriage Return (CR). The line is placed numerically in the proper position with lines already in memory. You can enter lines in any order, but they will always be stored, and later executed, consecutively by line number. If a line is entered with the same line number as one already in memory, the previous line is deleted before the new line is stored. To delete a line entirely, you enter the line number, followed immediately by a CR. In writing programs, line numbers are generally chosen in increments of 5 or 10 so that later additional lines can be inserted as necessary.

In TBX, a colon is used as a system prompt. This helps keep you posted on the status of the system. To use the direct mode, simply enter the instruction immediately following the prompt. NEW, LST, SZE, and RUN instructions are generally used in the direct mode, rather than as part of a program. If a number is entered after the prompt, TBX assumes you want to enter or delete a line from storage — no execution takes place, as in direct mode.

One of the features of a high level language like TBX is that it is able to detect programming errors and take action to prevent the system from destroying itself. To assist in debugging, TBX will print an error message. The message takes the following form:

ERR A B

A is the error code (see Table 4) and B is the line number at which the error occurred. If B is 0000, the error occurred during a direct mode instruction.

How To Obtain TBX

Because of the length of TBX code, an octal listing in this article is not feasible. A complete octal listing with instructions can be obtained for $5.00. Both a cassette and Baudot paper tape are available for $15.00 postpaid. Please specify Suding cassette, Kansas City Standard cassette, or Baudot paper tape (binary encoded). Address all inquiries or orders to: TBX Tape — Baudot Version, 305 Clemson Dr., Tyler TX 75701.

Sample Program

To help you get started, we have included the listing of a program written in TBX. A few lines of execution follow the listing. Studying this program will help you get started in BASIC programming.

Just think about it! Who would ever suppose that an old Model 19 could speak BASIC? Well, it can, and so can yours! ■

1	Input line too long — exceeds 72 characters
2	Numeric overflow on input
3	Illegal character detected during execution
4	No ending quotation mark in PR literal
5	Arithmetic expression too complex
6	Illegal arithmetic expression
7	Label does not exist
8	Division by zero not permitted
9	Subroutine nestling too deep
10	RET executed with no prior GOSUB
11	Illegal variable
12	Unrecognizable statement or command
13	Error in use of parenthesis
14	Memory depletion

Table 4. Error codes.

I/O REPORT

from page 132

address line. For example, locations ØE5A, B, and C contain a JUMP (4C) to location ØF4Ø. . . and with only the nine address lines used this will actually work out to be location 14Ø. The ØF4Ø is necessary, though, because address bit 11 is the enable for the PROM.

0E00	A2	0E30	85	0E60	30	0E90	00	0EC0	4A	0EF0	E6
01	7F	31	01	61	E9	91	C5	C1	85	F1	07
02	9A	32	46	62	A5	92	03	C2	02	F2	A9
03	D6	33	00	63	09	93	90	C3	18	F3	00
04	A9	34	4C	64	C5	94	28	C4	65	F4	AA
05	00	35	43	65	02	95	48	C5	08	F5	E8
06	A8	36	0E	66	80	96	01	C6	85	F6	8A
07	85	37	4A	67	1E	97	85	C7	03	F7	C9
08	08	38	EA	68	E6	98	00	C8	A9	F8	1F
09	A9	39	85	69	04	99	20	C9	00	F9	B0
0A	80	3A	01	6A	A9	9A	F0	CA	85	FA	11
0B	86	3B	46	6B	07	9B	0E	CB	06	FB	8D
0C	00	3C	00	6C	C5	9C	E6	CC	A9	FC	50
0D	A0	3D	A5	6D	04	9D	06	CD	07	FD	0F
0E	00	3E	00	6E	D0	9E	A0	CE	C5	FE	C5
0F	85	3F	09	6F	DA	9F	40	CF	05	FF	00
10	0A	40	80	70	A9	A0	C5	D0	B0	0F00	D0
11	85	41	85	71	D2	A1	07	D1	05	01	F3
12	09	42	00	72	85	A2	80	D2	A5	02	8A
13	E8	43	EA	73	0F	A3	19	D3	09	03	0A
14	0A	44	EA	74	20	A4	A8	D4	0A	04	09
15	58	45	A9	75	90	A5	D0	D5	85	05	C9
16	EA	46	00	76	0F	A6	85	D6	02	06	85
17	EA	47	85	77	4C	A7	0F	D7	A8	07	0F
18	EA	48	09	78	09	A8	20	D8	03	08	20
19	EA	49	85	79	0E	A9	90	D9	C5	09	90
1A	EA	4A	0A	7A	A5	AA	0F	DA	06	0A	0F
1B	78	4B	E6	7B	00	AB	A0	DB	90	0B	60
1C	D0	4C	0A	7C	0A	AC	C4	DC	03	0C	A9
1D	F5	4D	58	7D	85	AD	85	DD	4C	0D	F6
1E	E6	4E	EA	7E	02	AE	0F	DE	09	0E	85
1F	09	4F	EA	7F	A9	AF	20	DF	0E	0F	0F
20	2C	50	EA	80	00	B0	90	E0	A5	10	20
21	00	51	EA	81	85	B1	0F	E1	09	11	90
22	04	52	EA	82	05	B2	A9	E2	0A	12	0F
23	10	53	78	83	4C	B3	FE	E3	85	13	A9
24	EE	54	D0	84	00	B4	85	E4	03	14	00
25	EA	55	F5	85	0E	B5	0F	E5	4C	15	AA
26	EA	56	E6	86	A9	B6	20	E6	09	16	E8
27	EA	57	09	87	00	B7	90	E7	0E	17	8A
28	EA	58	D0	88	85	B8	0F	E8	00	18	C9
29	A5	59	03	89	04	B9	A0	E9	00	19	1F
2A	09	5A	4C	8A	E6	BA	00	EA	00	1A	B0
2B	C6	5B	40	8B	05	BB	85	EB	00	1B	19
2C	01	5C	0F	8C	20	BC	07	EC	00	1C	8D
2D	80	5D	2C	8D	F0	BD	4C	ED	00	1D	70
2E	08	5E	00	8E	0E	BE	D7	EE	00	1E	0F
2F	0A	5F	04	8F	A5	BF	0E	EF	00	1F	C5

0F20	00	0F50	00	0F80	04	0FB0	F0	0FE0	00	
21	D0	51	40	81	0A	B1	06	E1	00	
22	F3	52	00	82	36	B2	A9	E2	00	
23	8A	53	A0	83	E4	B3	FF	E3	00	
24	0A	54	01	84	A2	B4	C5	E4	00	
25	09	55	10	85	0C	B5	00	E5	00	
26	C0	56	20	86	FC	B6	F0	E6	00	
27	85	57	90	87	F4	B7	1F	E7	00	
28	0F	58	FF	88	7C	B8	4E	E8	00	
29	20	59	30	89	32	B9	00	E9	00	
2A	90	5A	50	8A	64	BA	02	EA	00	
2B	0F	5B	E8	8B	00	BB	C6	EB	00	
2C	A9	5C	60	8C	AA	BC	08	EC	00	
2D	FE	5D	48	8D	4C	BD	4C	ED	00	
2E	85	5E	58	8E	56	BE	D3	EE	00	
2F	0F	5F	80	8F	00	BF	0F	EF	00	
30	20	60	C0	90	98	C0	98	F0	00	
31	90	61	38	91	AA	C1	AA	F1	00	
32	0F	62	28	92	85	C2	89	F2	00	
33	60	63	D0	93	20	C3	20	F3	00	
34	EA	64	08	94	E8	C4	80	F4	00	
35	A9	65	D8	95	05	C5	00	F5	00	
36	02	66	68	96	20	C6	02	F6	00	
37	85	67	88	97	CA	C7	A8	F7	00	
38	0F	68	F0	98	CA	C8	07	F8	00	
39	20	69	18	99	10	C9	85	F9	00	
3A	90	6A	70	9A	F7	CA	08	FA	AA	'AA' Interrupt vector
3B	0F	6B	00	9B	A5	CB	A9	FB	0F	'0F'
3C	4C	6C	E0	9C	0F	CC	FF	FC	00	'00' Startup vector
3D	2C	6D	98	9D	85	CD	96	FD	0E	'0E'
3E	0F	6E	88	9E	20	CE	20	FE	AA	'AA' Interrupt vector
3F	00	6F	00	9F	C8	CF	CA	FF	0F	'0F'
40	58	70	00	A0	60	D0	30			
41	A6	71	C4	A1	00	D1	01			
42	FF	72	00	A2	00	D2	88			
43	85	73	8C	A3	00	D3	68			
44	09	74	00	A4	00	D4	AA			
45	2C	75	00	A5	00	D5	88			
46	00	76	3C	A6	00	D6	40			
47	04	77	1C	A7	00	D7	8D			
48	30	78	00	A8	00	D8	10			
49	F8	79	00	A9	00	D9	02			
4A	78	7A	84	AA	48	DA	C6			
4B	4C	7B	7A	AB	8A	DB	08			
4C	62	7C	CE	AC	48	DC	68			
4D	0E	7D	00	AD	EA	DD	AA			
4E	00	7E	E2	AE	A5	DE	68			
4F	00	7F	8E	AF	08	DF	40			

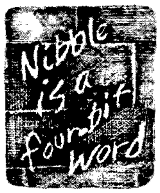

J. H. Everhart WA3VXH
88 Knollwood Dr.
Lancaster PA 17601

Toward a More Perfect Touchtone Decoder

-- Ma's system can be made to work well

Bell labs really started something with their DTMF (Dual Tone Multi-Frequency) dialing system.[1,2,3] Developed for easy rapid dialing and bearing the fancy name "Touchtone"* it rapidly outgrew its original purpose as developed for the Bell System. Touchtone signaling is widely used now anywhere a voice-frequency communications link is available. It offers a rapid, inexpensive means of sending non-vocal information using small inexpensive encoding devices (Touchtone pads) and requiring relatively simple, cheap decoders. Commercial uses include bank account status reporting, computer input/output, remote control and selective calling on radio systems. And, as any FMer knows, Touchtone signaling is widely used by radio amateurs for repeater control functions, selective calling and autopatches.

Touchtone usage by hams saw only limited usage so long as the only decoders available were surplus (?) Ma Bell or expensive commercial types. Signetics then simplified the whole matter when they introduced their 567 phase locked loop (PLL) tone decoder IC. Using the 567 makes building a tone signaling system very easy. Of course, the semiconductor industry recognizes a winner very quickly, so now the 567 type chip is available from National Semiconductor, Exar, and others, as well as from Signetics. This competition has decreased prices drastically, so that now you can find these chips available through *73 Magazine* advertisers for as little as $1.50 apiece.

Now that all that introductory stuff is over, let me tell you what this article is about. In the course of working with PLL ICs to make practical Touchtone decoders, I've found some useful methods and suggestions. I don't mean to deride the semiconductor industry's applications staffs, but their general overall treatment of applications data is too general to be fully workable. It's very frustrating to find that applications info stops just short of giving me enough detail to make a fully working circuit. The first trial usually works after a fashion, but the "bugs" have to be worked out. My intent in writing is to fill the information gap and my work may help others in using PLL decoders, primarily over radio transmission links as used by radio amateurs.

Tone Decoder Block

The basic PLL tone decoder building block is shown in Fig. 1(a). I won't give any detail about its inner workings or component values, since this information is well covered in several places.[4,5,6] The references also provide slightly differing circuitry, but the basic function remains the same. From now on, this decoder block will be shown as in Fig. 1(b). Basically, all the block does is provide a specific response to a predetermined range of frequencies. The 567 has an open-collector output which switches from a high resistance to ground to a low resistance state when the proper tone is applied to its input. Thus when the tone appears, current will flow through the load resistor R_L shown in Fig. 1(a).

In order to successfully decode a Touchtone signal, more than one such decoder block is needed. Each individual Touchtone symbol is transmitted as a pair of tones as shown in Fig. 2; for example, the digit "1" consists of a 697 Hz tone and one at 1209 Hz sent simultaneously. As you can see, these tones are arranged in two sets. The sets are called the high group (1209, 1336, 1477 and 1633 Hz)** and the low group (697, 770, 852 and 941 Hz). Each symbol or digit is sent with one high group and one low group tone. Thus a complete Touchtone decoder must have at least seven decoder blocks to

*AT&T Trademark.

**The fourth high group tone (1633 Hz) is shown for completeness, but not widely used by hams since 12 button pads don't generate it.

Fig. 1(a). Schematic diagram.

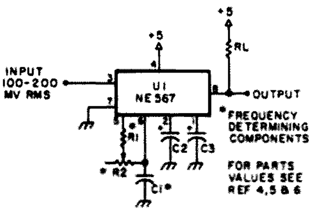

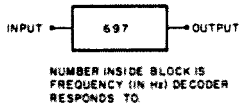

Fig. 1(b). Tone decoder block.

Fig. 2. Frequency pairs for Touchtone symbols. Two tones are transmitted simultaneously. For example, digit 1 is 697 and 1209 Hz, etc.

LO GROUP \ HI GROUP	1209Hz	1336Hz	1477Hz	1633Hz
697Hz	1	2	3	A
770Hz	4	5	6	B
852Hz	7	8	9	C
941 Hz	#	0	*	D

A,B,C,D NOT NORMALLY USED

detect the presence of any of the legitimate tones (see Fig. 3). The block indicated as LOGIC contains digital gates to convert the 2-out-of-seven decoder outputs to 0-9, # and * outputs (references 5 and 6).

Band-Splitting

The simple Touchtone decoders commonly used feed audio directly from the communications link (radio receiver, telephone line, etc.) to the inputs of the decoder blocks as shown in Fig. 3. If system audio level can be controlled, and if too many extraneous signals aren't present, this scheme works well. However, on a typical radio link (and especially on an amateur repeater) these conditions don't exist. First, there is usually an imbalance in tone levels between the high and low groups called "twist." Bell System compatible Touchtone pads emphasize high group tones to allow for attenuation of the higher frequency tones in telephone lines. Additional imbalance (twist) often occurs due to the imbalance of audio tailoring between transmitters and receivers, particularly in FM systems. Also, recovered audio varies depending on the amount of audio transmitted via the link. Secondly, on any link, and particularly amateur repeaters, a wide variety of squeals, whistles, grunts, clicks and other barnyard noises occurs frequently.

With these uncontrolled inputs, the Touchtone decoder can misbehave, causing "falsing," which can be either an output without any valid input signal, or non-recognition of a valid signal in the presence of unwanted noise. As described in the Signetics application literature, the PLL detection bandwidth varies as a function of signal amplitude applied to the chip. Thus, at low levels, a signal only slightly off frequency in one tone channel might be recognized, whereas at high levels, a tone well off the mark might cause a false response.

Obviously, some means of level control is needed to get around this problem. One commonly used method is a limiter (just like in an FM receiver). This is a fine idea, except that a limiter alone won't do the job for two reasons. First, a limiter exhibits "capture effect." This just means that if two signals of unequal amplitude are fed to a limiter, the stronger one predominates, further suppressing the weaker signal. This would make any "twist" even worse than it was without the limiter. Secondly, limiters, because they are nonlinear, generate spurious mixes and harmonics that could generate extra frequencies which can foul up decoder operation. The solution is easy – use two limiters, one for the high group and another for the low group. And to keep out spurious crud, feed each limiter with only those frequencies present within its respective group, as in Fig. 4. The bandpass filters make up what is called a band-splitting filter. Each passes only those frequencies required by the individual decoder group, so the problems of emphasizing "twist" and generating unwanted slop are circumvented.

Fig. 3. Simplest 12 button pad Touchtone decoder.

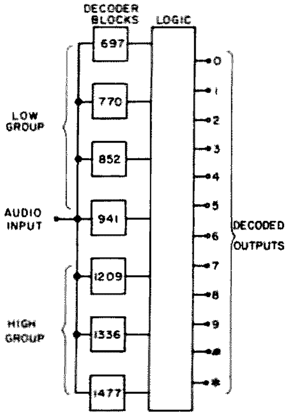

Practical Band-Splitter

Fig. 5 shows the schematic diagram of an easy-to-duplicate band-splitting filter. Each half of the filter consists of two cascaded bandpass active filters (they act like LC tuned circuits) which are staggertuned, so that they pass one frequency group, while rejecting the other group. The bandpass sections are so-called multiple feedback active filters whose Q and center frequencies were empirically derived (fudged to fit). Anyone so inclined can design another filter, probably better, using the techniques outlined in Chapter 8 of reference 7 and Chapter 5 of reference 8. The filter circuit is simple and cheap to build, since all four operational amplifiers used are contained on one chip in the Motorola MC3401 or National LM3900 integrated circuits. The limiters which follow the band-splitters are very simple, consisting of a pair of back-to-back germanium diodes for each section. All in all, this may be pretty crude, but it works well. Construction of the filter is non-critical since it operates at audio frequencies. Several of them have been constructed using both vectorboard and PC board construction with no layout or parts placement difficulties encountered. For room temperature operation, all frequency determining components are non-critical, but refer to a later section for suggested extended temp range component types.

Tune-up is relatively simple. It is best done by first separating the four individual bandpass sections by opening the A-B and D-E connections. Connect an ac voltmeter to A, and apply dc power. The meter should read 0 volts ac. Now connect a source of 697 Hz sine wave audio to the input line and set the input level to about .1 volts rms. Adjust R3 for resonance as indicated by maximum deflection of the ac voltmeter. (Although the schematic shows a potentiometer here, I selected a fixed resistor of proper value and soldered it in place – pots cost too much.) Now connect the meter to point C and a 941 Hz signal to B. Adjust R8 for maximum meter reading. The low group filter is now tuned, so reconnect A to B. Repeat the same procedure for the high group filter, observing the high group connection points. High group tune-up frequencies are 1209 and 1633 Hz.

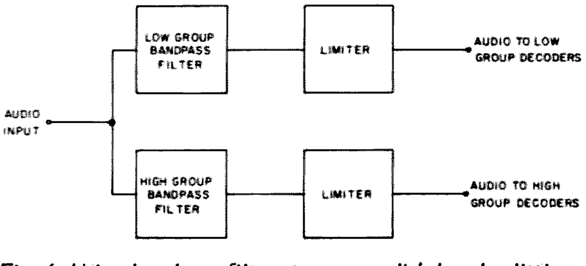

Fig. 4. Using bandpass filters to accomplish band-splitting.

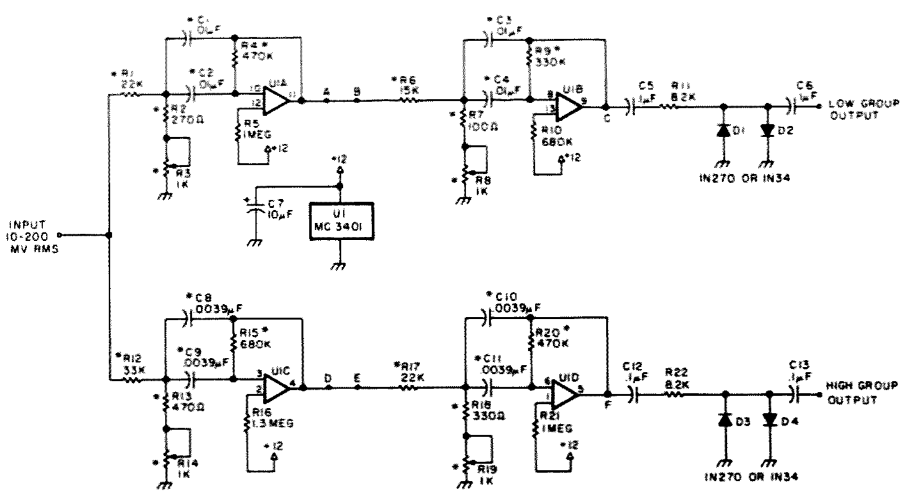

*Fig. 5. Band-splitting filters and limiters. Notes: 1. * indicates tuning components should be 5% tolerance. 2. Other components 10%. 3. +12 V can be 8 to 15 V dc but must be filtered.*

Idealized amplitude response curves are shown in Fig. 6. Almost 20 dB rejection of the opposite group and out-of-band frequencies is provided by each section. In-band ripple depends on accuracy of tuning. It has varied between 3 and 6 dB for the filters I built. You may notice that the high group filter extends beyond 1477 Hz.

Actually, there is another frequency used in some systems to expand the symbol set. Few available pads have the fourth group of buttons, although they can be added. Anyway, this lengthening of the high group filter will cause no harm in a 12 button pad system.

Further Improvements

Using the band-splitting filter and limiter combination vastly improves decoder operation as described above, but there is still room for improvement. The 567 decoder IC, it appears, was designed primarily to drive relays. One would think that it should drive logic circuits as in Fig. 3 just as well. Unfortunately, this is not necessarily so. Relays have an appreciable time lag in their operation due to their electromechanical structure. This delay can range from perhaps a millisecond to 100 milliseconds or so, depending on their size. The 567 needs this lag. Certain combinations of input signals or noise pulses can cause short duration chattering of the 567 output. Relays ignore these spurious outputs because they are usually only 100 microseconds to a millisecond long. However, TTL circuits take less than 100 *nanoseconds* to switch, so they pass on these phony outputs and can foul up system operation. Signetics has some hints for chatter prevention on their data sheet, but I never got them to work well enough to get rid of all of the hiccoughs and burps. My cure was to add a delay circuit between the 567 and logic gates.

Delay Circuit Operation

The delay circuit is shown schematically in Fig. 7. Q1, with its associated resistors, R1 and R2, form a logical inverter. Q2 forms a second inverter with delayed response. Initially, the output of the 567 is high, Q1 is turned on, C1 is at ground and Q2 is off. Thus the collector of Q2 is high, giving the same logical sense as the output of the 567. When a tone appears, the 567 output goes low, and Q1 turns off charging C1 through R2 and R3. When C1 charges to about 1.5 volts, Q2 turns on and its collector goes low. The time required to turn on Q2 is determined by the values of R2, R3 and C1. In this case, the time is about 7 milliseconds. When the tone stops, the 567 output goes high and Q1 collector goes low, discharging C1 through D1 and R4. Q2 turns off when C1 falls below 1.5 volts. Note that the discharge time constant of C1 with R4 is much shorter than the charging time constant of R2 and R3 with C1. This makes the delay time to turn Q2 off much shorter than its turn on time. This characteristic ensures that short pulses and chatter on the 567 output will not pass through the delay circuit, but valid signals longer than 7 milliseconds will. There are other means of getting the same effect, depending on the logic involved, as in references 9 and 10. I used what I believe to be a simple discrete component circuit because I have plenty of them. At any rate, the delay block helps clean up the decoder's output, however it is implemented. If using a 74121 one shot or a 555 timer turns you on – do it! Construction of the delay is super non-critical; even component tolerances matter little. Electrolytic capacitors and carbon composition resistors are fine; just be sure that the transistors used have a gain (HFE) of 150 or more.

By the way, using this delay circuit is not an original idea. Bell Labs designed a more complicated version into the station equipment described in reference 2. Besides getting rid of chatter, timing to determine signal validity is commonly used in tone signaling systems. It eliminates many falsing problems at the expense of slightly lengthened response times. For manual Touchtone use, this extra delay poses no handicap because users are hard-pressed (no pun intended) to punch buttons much faster than two a second. Some automatic calling systems run as fast as 10 digits a second, so care must be taken to tailor decoder response times to use them.

System Assembly

The complete decoder is shown in block form in Fig. 8. Each of the indicated blocks has been described earlier, although not all schematics have been fully described. For more detailed information, see the reference section where I have briefly

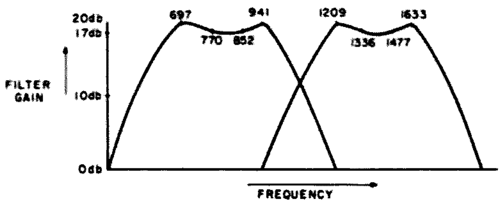

Fig. 6. Idealized band-splitting filter response curves.

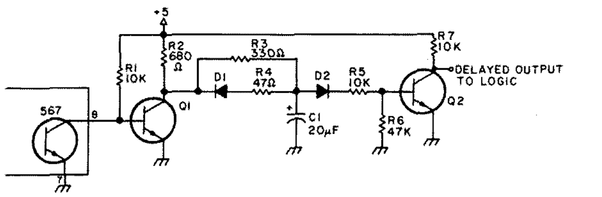

Fig. 7. Decoder delay circuit. D1, D2 – 1N914 or 1N4148. Q1, Q2 – MPS 5172 or other NPN silicon with β over 150.

summarized the content of each article. You can pick and choose the information desired to tailor your own system to individual needs. A more complete schematic diagram is not given here because I doubt that anyone would duplicate my system exactly.

Miscellaneous

Now for a few more tips. First of all, let's look at temperature stability. The Signetics data sheet shows very well how stable the 567 is with temperature, but outside the lab, the resistors and capacitors used to tune the chip can seriously degrade the stability of the IC. Sensitive parts are indicated as frequency-determining components in Figs. 1(a) and 5. Those used in the delay block of Fig. 7 are not at all critical. If the decoder is intended solely for room temperature use, ordinary carbon composition resistors and mylar capacitors are fine for critical components. For extended temp range operation, more stable parts will be needed to prevent degradation of the decoder's performance. Resistors should be of the precision film type. A good compromise between price and performance is the use of semi-precision Corning RL-07 or IRC Metal Glaze™ resistors. For tuning capacitors outside the range of 32 to 122° F, mylar capacitors are a poor choice. Better choices are capacitors with polystyrene or polycarbonate dielectrics. An excellent choice of polycarbonate capacitors is the Siemens B32540 series available from Newark Electronics in Chicago. They are ideal for printed circuit boards – they are small, relatively inexpensive and *very* temperature stable. I've used them from minus 65° F to plus 200° F with a total capacitance drift of less than two percent!

Finally, a word or two about tuning the individual 567 decoder blocks. Neither the application notes nor the data sheet give any clues as to the proper method. I once saw directions for adjustment in a decoder instruction book that said to apply signal and adjust the pot first in the clockwise direction until the output goes low, then adjust in the counterclockwise direction until it goes low. The builder was to note both potentiometer settings and set the pot midway between them. Great! The only thing they neglected to say was that the two settings were about 5° apart. You would need a microscope and a surgeon's steady hand to set the blasted thing that way.

I've had the most success with tuning the vco by adjustment of its internal free-running frequency. One way to do this is shown in Fig. 9(a). The frequency counter reads the frequency of the vco inside the 567. Simply adjust R2 for the frequency you want the decoder to respond to. If you don't happen to have a frequency counter, but you do have an oscilloscope and a signal source (such as a Touchtone pad), use the setup of Fig. 9(b). The oscilloscope is used to display a Lissajous figure. First set the signal source to the desired frequency, then adjust R2 on the decoder for a stable 1:1 Lissajous pattern (examples of Lissajous figures can be found in the ARRL *Radio Amateur Handbook*). In this setup the figure will not be a circle because the signal at pin 5 of the 567 is not a sine wave. A 1:1 pattern is easily achievable though, strange as it may appear. For either measurement method two precautions will ensure correct adjustment. Just be sure that (a) the input (pin 3) is grounded through a .1 uF or higher capacitor – stray signals on an ungrounded input will cause measurement error; and (b) the counter or oscilloscope must have a 1 megohm or higher input impedance, or circuit loading will affect the 567's frequency setting.

Conclusion

The PLL tone decoder ICs can be used to make a very good Touchtone decoder. The band-splitters and limiters described herein help clean up signals fed to them and the delay sections clean up their outputs. Simple adjustment techniques can be used to accurately set the decoders precisely on frequency. The circuits and methods given provide guidelines for setting up a practical working system. They have all been tested and duplicated to ensure their accuracy and repeatability. Use them and you'll avoid having to repeat my trials and errors. Good luck! ■

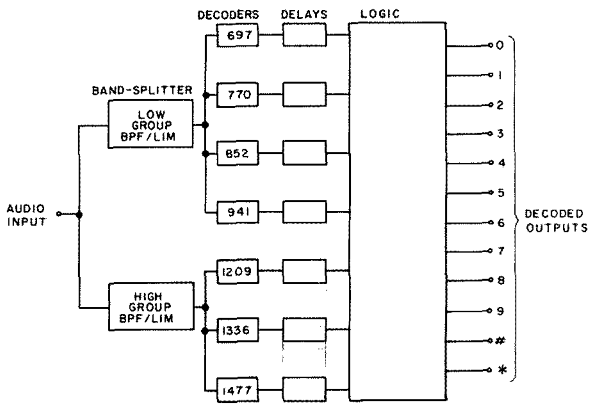

Fig. 8. Improved decoder including band-splitter and delay elements.

References

1 M. L. Benson, F. L. Crutchfield, H. F. Hopkins, "Applications of Touch-Tone Calling in the Bell System," *Bell System Technical Journal*, New York, March, 1963, pages 1-4. General Touchtone system description.

2 R. N. Battista, C. G. Morrison, D. H. Nash, "Signaling System and Receiver for Touch-Tone Calling," *Ibid*, pages 9-17. Excellent description of tone signaling receiver theory and Bell System station equipment.

3 J. H. Ham, F. West, "A Touch-Tone Caller for Station Sets," *Ibid*, pages 17-24. Theory and construction of Bell System Touchtone pads.

4 Signetics Applications NoteBook, Copyright 1974. PLL Applications section has design info and Touchtone decoder with output digital logic.

5 Signetics NE/SE 567 Data Sheet. Lists characteristics and design data for using 567 tone decoder.

6 "FM and Repeaters for the Radio Amateur," ARRL, 1972, pages 119-121. Basic 567 Touchtone decoder including digital logic.

7 Toby, Graeme, Huelsman, "Operational Amplifiers, Design and Applications," McGraw-Hill, New York, 1971. Chapter 8 has excellent high level design information on a variety of active filters aimed at engineering level uses.

8 D. Lancaster, "Active-Filter Cookbook," Howard W. Sams, New York, 1975. Entire book

contains very useful techniques for design and use of active filters. Chapters 5 and 7 contain data on how to design bandpass active filters. You had best brush up on your algebra to use this book, but it is extremely valuable.

The following references have not been specifically called out in the text of the article, but give different approaches to building tone decoders.

[9] R. B. Shreve W8GRG, "Sequential Switching for Touch-Tone Repeater Control," *Ham Radio*, June 1962, pages 22-29. Digit recognition logic to follow basic Touchtone decoder.

[10] W. E. Bretz WA6TBC, "Multi-function FM Repeater Decoder," *Ham Radio*, January, 1973, pages 24-32. Comprehensive Touchtone decoder and repeater controller article. Includes LC tuned band-splitter and sophisticated digital logic controller.

[11] J. F. Connors W6AYZ, "FM Touch-Tone Decoder," *Ham Radio*, December 1974, pages 37-41. LC Touchtone decoder with unique anti-falsing timers and control logic.

[12] C. Hoffman W1ELU, "Non-Falsing Tone Decoder," *73 Magazine*, June 1973, pages 83-84. 567 type single tone decoder with adjustable anti-falsing delay element.

Fig. 9(a). Tuning setup with frequency counter.

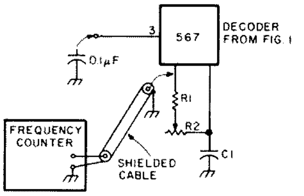

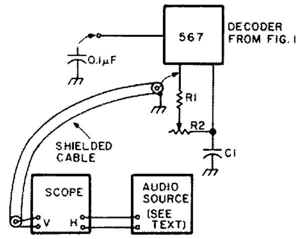

Fig. 9(b). Alternate setup using known signal source.

R. L. Way WA9VGS
12116 W. Belmar Drive
Hales Corners WI 53130

Using a Wireless Broadcaster

--two good ham uses

Wireless broadcasters have been around a long time, but their uses in hamming seem to have been overlooked. This article will suggest two ham uses for a commercially built version of this device, and will describe a simple mod to increase its range and versatility.

The purchased AM unit described and illustrated here is marketed under the names "Vox Box" and "Soundcaster" and is distributed by Olson Electronics. It is intended to plug into the earphone jack of an inexpensive cassette tape player to broadcast the taped music into an AM radio to provide greater volume and better fidelity. The broadcaster is packaged in a plastic pyramid about 2-1/2 inches square and 1-3/4 inches high, and has a 2 foot connecting cord, a miniature phone plug for connection to the cassette player, and a 6 inch insulated wire projecting from the bottom (the device's antenna). It is powered by a 9 volt transistor battery, and draws about 10 mA in use (and only a few microamps when the driving device is shut off, so a battery should last for months).

The gadget's transmitting frequency can be set anywhere between about 1400-1620 kHz, by turning the adjustment screw shown in Fig. 1.

The first ham use for this device is for increasing the volume and improving the audio quality of a 2 meter FM mobile rig. This works especially well if your car has both front and rear seat speakers, but there is a significant improvement with only a front seat speaker. Fig. 2 shows the installation of a broadcaster with a Regency HR2-A. This rig has plenty of volume, but its speaker is mounted in the top of the case and, with the installation as shown, the sound is thrown up under the dashboard where it is largely absorbed by the dashboard's foam padding. The broadcaster-car radio arrangement gives much clearer audio, which can turn a "poor copy" weak signal into a "solid contact." Connecting your 2 meter radio to the broadcaster is accomplished via the rig's speaker leads and a subminiature phone jack. One of the rig's speaker leads can be disconnected from the set's speaker if you intend to use the broadcaster arrangement exclusively, or you can install either a 3-circuit jac or SPDT switch to give you the option of using either th 2 meter radio speaker or th car radio speaker.

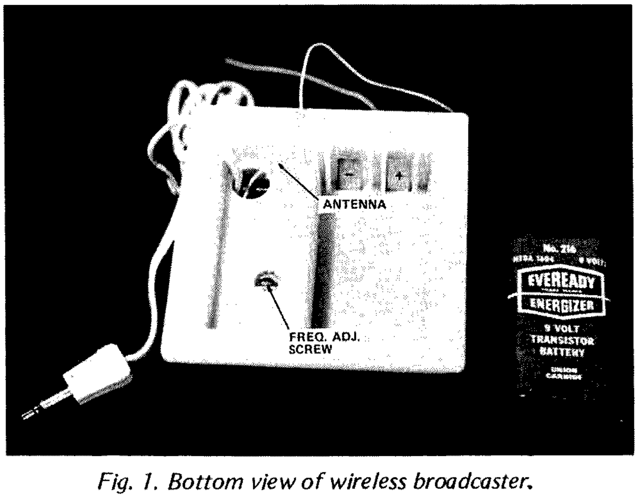

Fig. 1. Bottom view of wireless broadcaster.

The broadcaster is place on the dashboard near th car's AM radio antenna in th center of the windshield; it little wire antenna couples very strong signal into the ca

Fig. 2. Broadcaster used with 2 meter rig in car.

Fig. 3. His/hers arrangement.

.ntenna, even from several nches away. If your car has a vhip antenna, of course, the ›roadcaster should probably ›e placed on the dashboard ide nearest the whip. \dvance the volume control ›f the amateur rig just far :nough to produce a clear ignal, and adjust the volume vith the car radio's volume :ontrol; too much audio from he amateur rig will overdrive he broadcaster, causing listortion. The only minor lisadvantage of this setup is ome background noise from he car radio during trans-nitting. If this is objection-ble, the only simple cure is o turn down the car radio olume control before reach-g for the mike.

Fig. 3 shows a multiband ›ortable radio with broad-:aster in my wife's car. This is . his/hers arrangement: mon-toring FM repeaters and air-craft calls for me, FM broad-cast band music for her.

The broadcaster described normally has a range limited to 3-6 feet or so, depending upon obstructions in the signal's path, sensitivity of the AM radio, etc. By increasing the broadcaster's range, it can be used with an AM portable radio (prefer-ably of the shirt pocket size variety) to remotely monitor any VHF or HF rig in your shack. It's nice to be able to listen in on an interesting roundtable QSO or net, or to monitor the mobile activity on a channel while going to the kitchen for a cool one, upstairs to answer the door-bell, and so forth. With the setup to be described you can just plug in the broadcaster, grab the AM portable, and monitor what's happening on frequency while going about other errands.

However, *carefully observe* the FCC's regulations re-garding unlicensed trans-missions in the broadcast bands: (1) transmitting power not to exceed 100 milliwatts; (2) antenna length not to exceed 10 feet; (3) no inter-ference to be caused to broadcast band listeners. The first two of these conditions are no problem, but the third may be impossible to satisfy if you live in a crowded apart-ment building, or if you have any neighbors less than 25 feet from where you'll be using the broadcaster. So be a

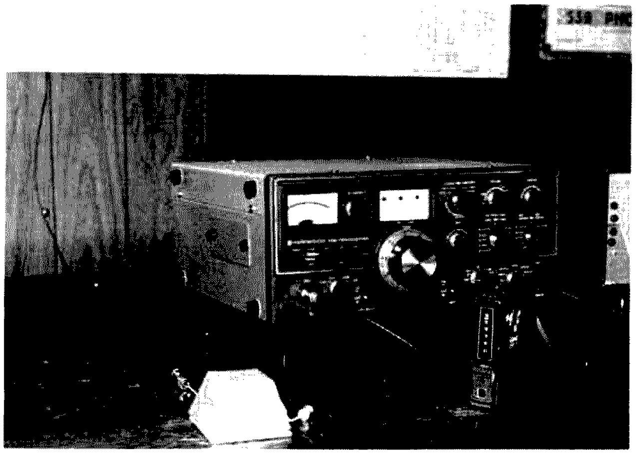

Fig. 4. 8 foot antenna added to the broadcaster.

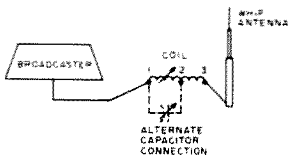

Fig. 5. Wiring diagram of broadcaster with whip antenna.

good neighbor, and *stay legal.*

The simplest method of increasing the broadcaster's range is to add a length of wire to its short antenna. Fig. 4 shows a portion of an 8 foot length of #22 hookup wire connected to a broadcaster with an RCA-type phono plug and jack. The wire is thumbtacked to the wall and across the ceiling. With this installation in my basement shack, the amateur rig can be heard clearly (on the little AM portable shown in the picture) throughout the upstairs of my ranch house. There are, of course, a few "dead spots" in the house where furnace ducts, house wiring, etc., interfere with reception. Adding any length of wire to the broadcaster's antenna will load the oscillator and change its operating frequency slightly, and you will have to move the frequency back to wherever you want to receive it on your AM radio. Also, as would be expected, the AM radio tuning is fairly broad when it is close to the broadcaster, but becomes quite sharp as the radio is moved further away.

A better method for increasing the broadcaster's range, that gives more precise control of the range and a neater installation, is to add a telescoping whip antenna to the broadcaster antenna, matching it with a slug-tuned ferrite loop antenna coil. These coils are sold as a replacement part for fixing portable radios; the one listed in the parts list should be widely available. Fig. 5 is the wiring diagram, and Fig. 6 shows the components wired together and mounted on a scrap of plywood for the initial try at this circuit.

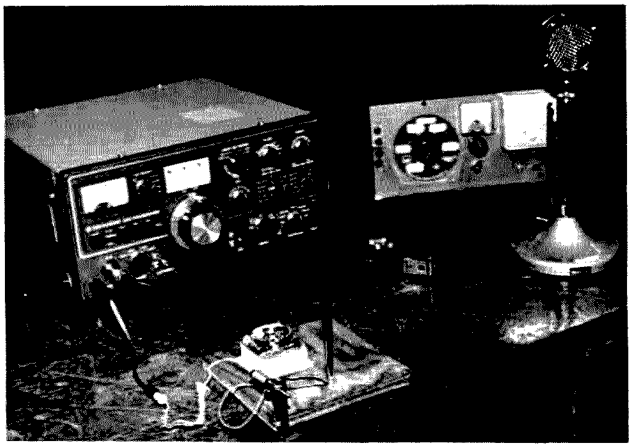

Fig. 6. Broadcaster (with cover removed) connected to antenna coil and whip antenna.

Note that Fig. 5 shows a phantom capacitor connected between terminals 1 and 2 of the coil to resonate it to frequency. The notes on the coil package call for a 100-250 pF variable. However, I found that the broadcaster has better range and is easier to tune without a capacitor.

Tuning is accomplished by alternately varying the whip height and adjusting the coil slug for maximum signal strength at the desired range. This is best done in a series of steps, starting near the broadcaster, and progressively working out to maximum range. Again, these adjustments will slightly detune the transmitting frequency, and you'll have to either retune the portable radio, or tweak the broadcaster's oscillator to the desired frequency.

The whole assembly can be packaged in a small minibox for a neater appearance, as shown in Figs. 7 and 8. The box shown is plastic, and measures 6¼" by 3¾" by 2". It is larger than needed but was conveniently available. As shown in the close-up, the broadcaster was mounted with 2" screws and standoffs through the top of the box. The bottom of the broadcaster faces outward, for easy battery replacement. A bracket for mounting is provided with the coil, which should be mounted near one end of the box so that the slug adjustment screw can protrude through a hole drilled in that end.

This version of the broadcaster also provides "arm chair copy" of amateur band signals in my living room and throughout the house.

Other non-ham uses of the broadcaster suggest themselves: monitoring TV sound from another room (you'll always know when the commercial is ending and it's time to get back to the set), broadcasting music from your hi-fi to the garage while working on your car, and so forth. ■

Parts List

Wireless broadcaster – see text.
Telescoping whip antenna – any broadcast radio or TV replacement type.
Ferrite loop antenna coil – Calectro part no. D1-842.
Mini utility box – Radio Shack part no. 270-627.

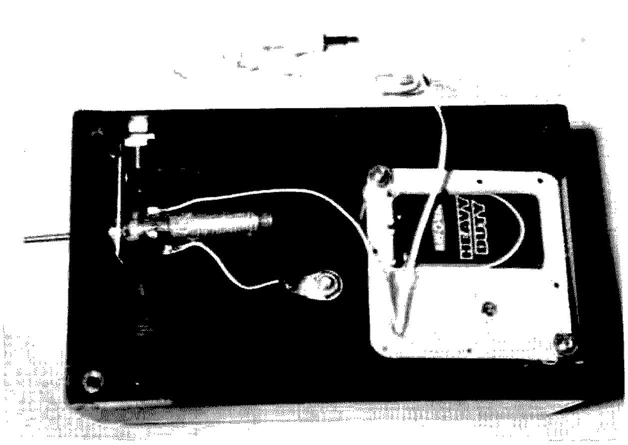

Fig. 7. Finished broadcaster assembly in minibox.

Fig. 8. Completed broadcaster with whip antenna in use.

I/O EDITORIAL

from page 130

which is well designed mechanically. They are working on final details and staying up nights to debug their software ... like everyone else in the field. I was impressed by what I saw and you'll be reading more about it.

Dennis Brown of Wave Mate had some excellent reasoning behind his use of wire-wrap for his system. His is the only system which uses one set of identical boards for every module ... and the only one which an experimenter can get into and make changes on with relative ease. We've been promised articles by Dennis on wire-wrap and the Wave Mate system concept.

Godbout was wringing out the software for the first 16-bit hobby system ... the PACE. This may turn out to be a winner when hobbyists get more into developing and selling small business systems. An article has been promised on the system, which should put it into perspective.

Just about everywhere I went I was first met with skepticism about the need for *Kilobyte Magazine* ... after all, with *Byte, Interface, Creative Computing*, maybe a *Microtreck*, and a bunch of club newsletters, who needs another big magazine? After explaining the philosophy behind *Kilobyte*, I found everyone enthusiastic. *Kilobyte* not only will be doing different things from the other publications, it will be providing a very valuable service. The reviews of hardware alone should pay every subscriber several times over in saved money and time. The software programs and routines should do the same.

Sphere, which has had a lot of management problems which have resulted in delays in filling orders, a BASIC emulator which crept along at a snail's pace, and other miseries in the past, has been reorganized and promises a better day to come.

MITS is still the biggest and the champ. We've been promised an article on their Zilog CPU system which is due out in a couple months ... and they have a lot of other fascinating things brewing which will intrigue the hobbyist and delight their growing network of sales outlets.

SWTPC in San Antonio has been doing very well with their 6800 kit and now is shipping 4K BASIC ...with 8K coming up. Their cassette interface and line printer are doing well and articles are scheduled from them on these.

I've some taped interviews with a few firms which might be of interest to computer clubs ... these will be duplicated and announced soon. I'll also have a more detailed report on the trip, complete with pictures in both *73* and *Kilobyte*. There is absolutely nothing like a personal visit to find out who is doing what ... which firms are for real and which are made up mostly of smoke.

BEGINNER'S COMPUTER MAGAZINE

There is just too much happening too fast in the small computer field for *73 Magazine* to cover it all without shoving amateur radio out almost entirely. Obviously a second magazine is needed to help readers keep up with this fantastic and growing field ... hobby.

It is a difficult decision because so much of hobby computing and amateur radio are tied together ... virtually *all* of the serious applications for hobby computers have so far been in amateur radio ... for exotic Teletype stations, control of amateur repeaters, control of amateur antennas for DXing and for Oscar amateur satellite predicting and antenna pointing ... etc.

Kilobyte Magazine will attempt to give you the most thorough coverage of new equipment and kits possible ... with no punches pulled. If you are into building your own computer, keep careful notes of what you have to go through ... problems with ordering, getting delivery, with getting missing parts and replacing defective parts, with instructions, with getting the equipment put together, with getting it working, with interfacing it, and so forth. Write up your report so your experiences can help others through the problems you met ... and hopefully conquered. Feedback like this will help manufacturers get their act together too ... and we sure could use a lot of that.

Kilobyte Magazine will be providing you with as much program info as possible. In addition to articles on programming, you'll have as many useful programs as we can get. If you've worked out some routines for any of the hobby computers, here is a way to cash in on them ... send the program to *Kilobyte*. It may be a program for checking memory, for generating random numbers, for playing a game, for aiming a beam antenna, for moving things around in memory, for checking your CPU, whatever. Your work can get you known ... and cash ... and will, most important of all, help a lot of newcomers.

Kilobyte Magazine will be checking out the newest equipment in the *73/Kb* lab ... which is growing every day. It presently has an Altair with disk, Imsai, Wave Mate, Ebka, Lear terminal, Southwest Tech TVT-II, Burroughs terminals, Viatrons, HAL terminal, all sorts of memory boards, and much more promised ... such as a 7 Meg disk for the Altair ... etc. *Kilobyte Magazine* is the *only* hobby computing magazine with its own test lab.

KEEP IT SIMPLE

Every effort will be made to keep as much as possible of the info in *Kilobyte* simple, as a way for the newcomer to hobby computing to bootstrap himself into the field. I am not unaware that just about all of the other computer hobby publications are alive with buzzwords and are more aimed at the PhD than the beginner. *Kilobyte* will even have a glossary of computer terms to help you get through the articles!

The first issue of *Kilobyte* will be the January issue, out in late November. If the demand for it is anything like that for the first issue of *Byte*, it may shortly be worth more than the charter subscription price of $12. All you have to do to miss out on the first issue is wait around to see how *Kilobyte* looks before you subscribe ... the way a few thousand very unhappy *Byte* readers did.

Single copies will be $2 and the regular subscription rate is $15, with a special Charter Subscription rate of $12 until the end of November.

WHAT'S A COMPUTER STORE?

While passing through Windsor Locks (CT) the other day, I stopped at the new computer store just off Route 91 to see what they were up to.

The Connecticut store is an offshoot of the Burlington, Mass. (Boston) computer store and features mostly MITS equipment. It is a place to get boards, see systems up and running, get some help in understanding what you may need for what you want to do, and get help in getting your own gear running. George Gilpatrick, shown in the photo, welcomes visitors at the Computer Store, 63 South Main.

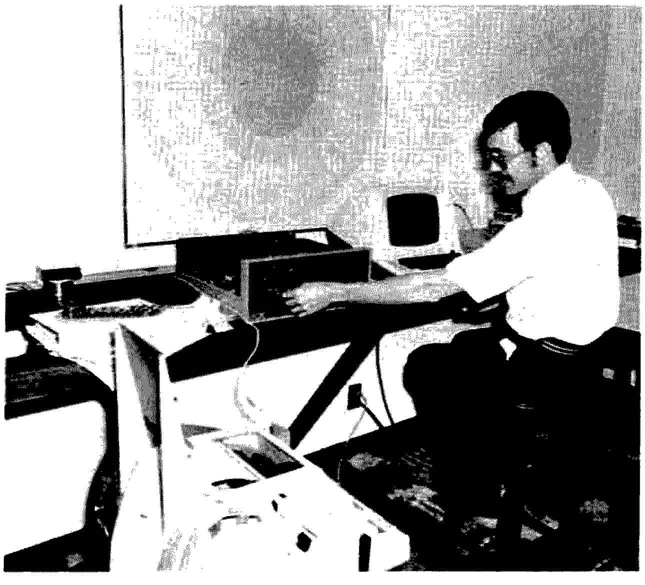

Rexford and Emelie Matlack
13443 First St. E.
Madeira Beach FL 33708

Charles Apgar didn't look much like a James Bond type of spy as he worked in the den of his Westfield, New Jersey home that June morning of 1915. A slight man, precise in speech and dress, he lived with his wife and two small children in this quiet suburban town. Intrigue had never played a part in his life. But the mail that day was to bring him a letter that would soon cast him in the role of a "super sleuth" for his government.

If you had glanced around his den-workshop, you would

The Quiet Spy

-- amateur uncovers spy ring in U.S.!

Wireless Age, September, 1915.

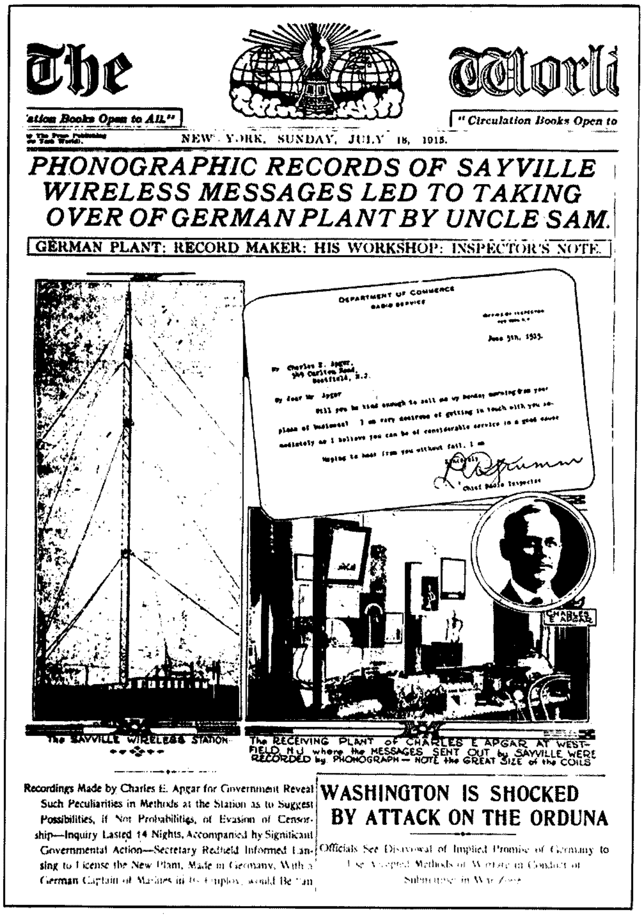

The World

"Circulation Books Open to All."

NEW YORK, SUNDAY, JULY 18, 1915.

PHONOGRAPHIC RECORDS OF SAYVILLE WIRELESS MESSAGES LED TO TAKING OVER OF GERMAN PLANT BY UNCLE SAM.

GERMAN PLANT: RECORD MAKER: HIS WORKSHOP: INSPECTOR'S NOTE.

DEPARTMENT OF COMMERCE
RADIO SERVICE

The SAYVILLE WIRELESS STATION

The RECEIVING PLANT of CHARLES E APGAR AT WESTFIELD, N.J. where the MESSAGES SENT OUT by SAYVILLE WERE RECORDED by PHONOGRAPH — NOTE the GREAT SIZE of the COILS

Recordings Made by Charles E. Apgar for Government Reveal Such Peculiarities in Methods at the Station as to Suggest Possibilities, if Not Probabilities, of Evasion of Censorship—Inquiry Lasted 14 Nights, Accompanied by Significant Governmental Action—Secretary Redfield Informed Lansing to License the New Plant, Made in Germany, With a German Captain of Marines in Its Employ, would Be "an

WASHINGTON IS SHOCKED BY ATTACK ON THE ORDUNA

Officials See Disavowal of Implied Promise of Germany to

have seen the results of a remarkably inventive mind. Ever since that windswept day in January, 1903, when Guglielmo Marconi sent the first wireless message from Cape Cod across the Atlantic to King Edward in England, Apgar had been interested in the new art of wireless. By 1910 he was patterning his experiments along the lines of work being done by Marconi and DeForest.

On one side of the room was a complete receiving and sending station with wires radiating out into the yard and up to the treetops. Against another wall sat his latest invention, just perfected after two years of work. It was a device for transferring messages sent through the air onto wax cylinders, which could be played back on a Edison phonograph. No one had ever done this before, and the experts had said no one ever could, but that statement was only a challenge to Apgar and it had spurred him along to the completion of his project.

The momentous letter that arrived that day was from Lawrence J. Krumm, Chief Radio Inspector, Department of Commerce of the Port of New York, and read:

"My dear Mr. Apgar: Will you be kind enough to call me up Monday morning from your place of business? I am very desirous of getting in touch with you immediately, as I believe you can be of considerable service in a good cause."

You may imagine Apgar's thoughts as he read, and reread, the letter. In what way could he be of "considerable ervice in a good cause," he wondered. He decided it urely must have something o do with Krumm's visit to is home several evenings efore. Knowing the Chief Inspector's interest in radio, Apgar had invited him to ome and see his completed ecording device demontrated. It had been a pleasant evening, with Krumm more than enthusiastic about the invention.

Next morning Apgar called the Chief Inspector's office from the Franklin Automobile Company in New York where he was employed, and agreed to come right over. Once there, it was suggested that they leave immediately for an interview with William J. Flynn, Chief of the United States Secret Service. Now Apgar was indeed mystified, as this service was the FBI of those days, and he could not think of any way he would be involved with it.

On the way, Krumm explained why he had written to him. As both men were aware, two powerful transatlantic stations had been constructed by the Germans in this country, one at Sayville, Long Island, the other at Tuckerton, New Jersey. Although World War I flamed in Europe, the United States was still neutral, so these stations had been granted temporary licenses for sending commercial messages to be received by POZ Nauen, Germany.

Krumm went on to tell him how the supposedly innocent messages were suspected of conveying word to German submarines and cruisers based in the Atlantic. Accusations were flying fast; Washington was deluged with complaints from the English and French ambassadors. Too often allied ships were sunk by submarines obviously well informed as to the ships' sailing dates and sea lanes. The problem was to prove this. But so far the Navy monitoring stations at Fire Island, New York Harbor and at Arlington, Virginia had been able to find no differences between what was filed with them and what was sent.

Now Flynn, as head of the Secret Service, was ordered to find out what was "going on." His knowledge of wireless being slight (as was that of most people in 1915), he had called on Chief Inspector Krumm to see if he had any suggestions to improve monitoring done by the Navy censors. By chance (and how often great happenings depend on such a twist of fate), his call on Krumm was the next day after the Inspector had been at the Apgar home. Of course the recording device was described and Flynn had asked for an interview with Apgar as soon as possible. So the letter was sent.

The meeting with Inspector Flynn was brief. He knew that Krumm had told Apgar of the problem, so he came at once to the point. Would he be willing to transcribe on his recording machine all messages sent out by the Sayville station over a period of two to three weeks? As they only transmitted at night, it would mean a long, tiresome process for Apgar, but there was no one else in the country who could perform this service.

Apgar didn't hesitate to accept the commission. This was a field in which he was at home and he looked forward to applying his invention to the "good cause" he finally understood. Besides, as he recorded later, he thought it would be a pleasure to "aid in taking the say out of Sayville."

He wasted no time in assuming his role as a spy for his government. The interview at the Secret Service office was at eleven in the morning and he began work the same evening. According to his private papers, he first scoured the city for blank cylinders. That meant some "tall hustling." Hurrying back to Westfield, he set up two Edison phonograph machines in his home. In that way he

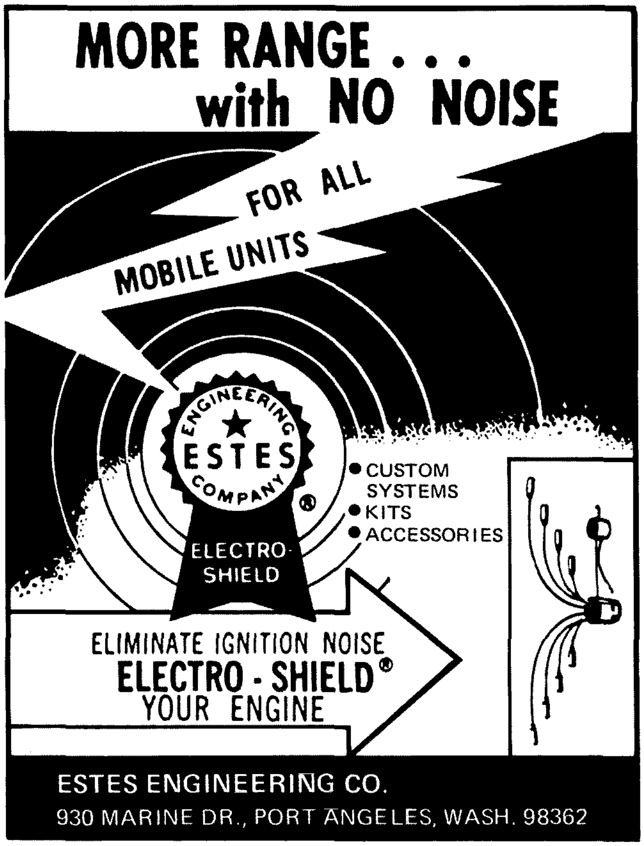

could switch the receiver from one machine to the other without missing a dot or dash of the transmission. Promptly on the night of June 7, and into the morning of June 8, he recorded on cylinders the messages sent out by WSL Sayville. Early the next day he transcribed them and personally delivered them to the Secret Service office to be turned over to the Navy Department for comparison with the ones filed and received by the monitors.

This went on for fourteen consecutive nights, starting at eleven and often running as late as three or four in the morning. Chief Flynn had not exaggerated. It was a long vigil. By June 21, he had filled 175 cylinders and transcribed 25,000 words. He confessed in a radio interview with WJZ New York in December 1934 that he did become quite tired and lost considerable weight during that time, but he was buoyed by the excitement and the results.

The messages monitored and those taken on the cylinders showed definite discrepancies. It might be a word repeated or numbered messages not in sequence – variations that conveyed a special word to the receiving station in Germany. The cylinders, with their slower and faithful reproductions, picked up what the Navy monitors had not been able to do. Chief Flynn turned all recordings over to Secretary McAdoo of the Treasury Department, where their contents by specific statute became inviolate. However, Apgar, in this same interview with WJZ, gave some examples of the original messages and the information they really gave.

"Send always invoice before shipping knives." signified instructions to POZ Nauen to be relayed back to German submarines in the Atlantic.

"Is our office running as usual with Sampler alive and attending? Please wire." was giving information on dates and routes of Allied ships leaving the ports of New York and Philadelphia.

These recorded messages proved that the station had indeed been violating the neutrality of the United States. As a result, both Sayville and Tuckerton were taken over by our Navy Department: Sayville on July 8, 1915 and Tuckerton shortly afterward.

At first the seizure of Sayville was spoken of in the press as a precautionary measure, according to an article in the *Wireless Age* of September 1915, but ten days later New Yorkers were surprised to read in the *World* that Sayville had been closed after investigation by the Secret Service, and that the phonograph recordings made by Charles E. Apgar of Westfield, New Jersey had established the true nature of the messages sent by the German station.

The press described his work for the Navy Department as "the most valuable ever rendered by a radio operator to his country." Apgar was pleased by this citation, and others, but he also spoke of a statement made in an interview by Dr. Karl Frank, the disgruntled manager of the WSL Sayville. After the closing of his station, the manager said, "That Mr. Apgar can record messages on a phonograph cylinder is hardly worth discussing. That is physically impossible. I have never heard of its being done."

We suspect that Apgar, the experimenter and inventor, was as well honored by this "citation" as by any he received. ■

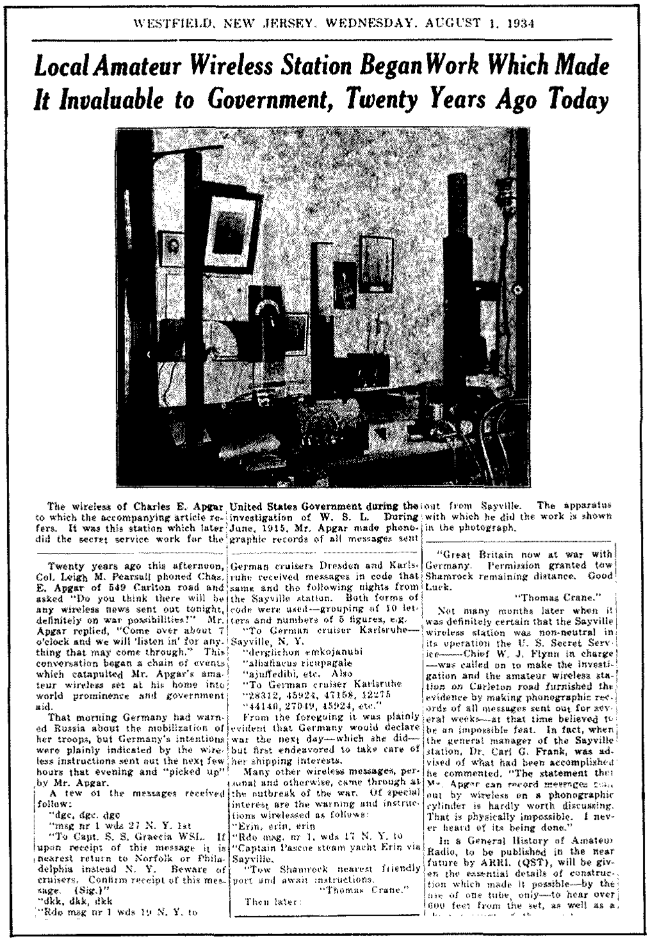

WESTFIELD, NEW JERSEY, WEDNESDAY, AUGUST 1, 1934

Local Amateur Wireless Station Began Work Which Made It Invaluable to Government, Twenty Years Ago Today

The wireless of Charles E. Apgar to which the accompanying article refers. It was this station which later did the secret service work for the United States Government during the investigation of W. S. L. During June, 1915, Mr. Apgar made phonographic records of all messages sent out from Sayville. The apparatus with which he did the work is shown in the photograph.

Twenty years ago this afternoon, Col. Leigh M. Pearsall phoned Chas. E. Apgar of 549 Carlton road and asked "Do you think there will be any wireless news sent out tonight, definitely on war possibilities?" Mr. Apgar replied, "Come over about 7 o'clock and we will 'listen in' for anything that may come through." This conversation began a chain of events which catapulted Mr. Apgar's amateur wireless set at his home into world prominence and government aid.

That morning Germany had warned Russia about the mobilization of her troops, but Germany's intentions were plainly indicated by the wireless instructions sent out the next few hours that evening and "picked up" by Mr. Apgar.

A few of the messages received follow:

"dgc, dgc, dgc
"msg nr 1 wds 27 N. Y. 1st
"To Capt. S. S. Graecia WSL. If upon receipt of this message it is nearest return to Norfolk or Philadelphia instead N. Y. Beware of cruisers. Confirm receipt of this message. (Sig.)"
"dkk, dkk, dkk
"Rdo msg nr 1 wds 19 N. Y. to German cruisers Dresden and Karlsruhe received messages in code that same and the following nights from the Sayville station. Both forms of code were used—grouping of 10 letters and numbers of 5 figures, e.g.

"To German cruiser Karlsruhe—Sayville, N. Y.
"derglichon emkojanubi
"albafiacus ricupagale
"ajuffedibi, etc. Also
"To German cruiser Karlsruhe
"28312, 45924, 47168, 12275
"44140, 27049, 45924, etc."

From the foregoing it was plainly evident that Germany would declare war the next day—which she did—but first endeavored to take care of her shipping interests.

Many other wireless messages, personal and otherwise, came through at the outbreak of the war. Of special interest are the warning and instructions wirelessed as follows:

"Erin, erin, erin
"Rdo msg. nr 1, wds 17 N. Y. to
"Captain Pascoe steam yacht Erin via Sayville.
"Tow Shamrock nearest friendly port and await instructions.
"Thomas Crane."

Then later:

"Great Britain now at war with Germany. Permission granted tow Shamrock remaining distance. Good Luck.
"Thomas Crane."

Not many months later when it was definitely certain that the Sayville wireless station was non-neutral in its operation the U. S. Secret Service——Chief W. J. Flynn in charge—was called on to make the investigation and the amateur wireless station on Carleton road furnished the evidence by making phonographic records of all messages sent out for several weeks—at that time believed to be an impossible feat. In fact, when the general manager of the Sayville station, Dr. Carl G. Frank, was advised of what had been accomplished he commented. "The statement that Mr. Apgar can record messages sent out by wireless on a phonographic cylinder is hardly worth discussing. That is physically impossible. I never heard of its being done."

In a General History of Amateur Radio, to be published in the near future by ARRL (QST), will be given the essential details of construction which made it possible—by the use of one tube, only—to hear over 600 feet from the set, as well as a

The Benefits of Sidetone Monitoring

-- and how to do it

73 Magazine *Staff*

"Sidetone" is used in amateur circles to denote a tone from a CW keying monitor. But the term comes, of course, from the telephone industry, where a certain amount of the voice energy feed into the microphone unit of a telephone handset is deliberately coupled to the receiver unit in the headset so a person can barely hear himself talk. It was determined that transmission efficiency was improved by this scheme and a person using a telephone tended to maintain a steadier, more level talking level — especially in a slightly noisy environment. The method must have some value, since, besides in the telephone system, one will find audio sidetone employed in various commercial radio transceivers, military transceivers and aircraft communications transceivers. This is *in spite of* the fact that these transceivers also employ various advanced forms of speech processing designed to keep the average modulation level as high as possible.

Amateurs might also consider the value of using audio sidetone in both mobile and fixed station installation. The use of such sidetone is mainly possible where a handset is used or a microphone/headset combination is employed. Otherwise, there is the possibility of audio feedback taking place unless a good directional microphone is used while the audio sidetone is monitored via a loudspeaker.

Simple Methods

A few simple methods for making the necessary audio sidetone interconnection in a station setup are as follows:

1. If a separate transmitter and receiver are used, one can make an interconnection between the microphone amplifier stage in the transmitter and the audio preamplifier stage in the receiver. This should be done after the volume control in the receiver and utilizing a separate potentiometer to control the level from the microphone amplifier output in the transceiver. Fig. 1 shows the basic idea. The audio stages in the receiver must remain activated during transmit periods for this scheme to work or the receiver transmit/receive function suitably rewired to accomplish this. A relay is used to break the audio sidetone circuit when in the receive mode, since feedback can easily result if the high receiver loudspeaker output level in the receive mode gets back into the microphone circuit.

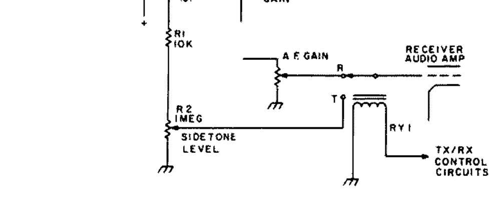

Fig. 1. Typical audio sidetone interconnection between separate transmitter and receiver or sections of a tube-type transceiver. The only added components are C1, R1, R2, and RY1.

2. If a transceiver is used, it may or may not be possible to utilize a scheme similar to the above between the receiver and transmitter portions of the transceiver. Some transceivers utilize complicated switching schemes for transmit/receive functions and the dual use of the low level audio stages both in the transmit function (as microphone amplifiers) and in the receive mode (as preamplifier after the product detector stage). In most transceivers, however, these functions are kept separate and one can switch the receiver section audio amplifier stages, via a relay, to pick up the output of one of the microphone preamplifier stages on transmit. A separate potentiometer should be used to control the level being fed into the receiver section audio amplifier stages and this potentiometer serves as the audio sidetone level adjustment.

3. The simplest scheme to

achieve audio sidetone monitoring is via a separate small amplifier which is used between the microphone and the station loudspeaker or headset and is energized only during transmit periods. Any one of the number of simple amplifiers can be used, such as the solid state PA amplifier modules available from Lafayette Radio or Radio Shack for about three dollars. Although called "PA" modules, these modules will not exactly create enough undistorted volume to disturb the household. However, they are very suitable for audio sidetone purposes since they have a high impedance input which can be bridged across any microphone output without greatly affecting it, and their low impedance output can be used to drive either a loudspeaker or a low impedance headset connected across a receiver's output. At the low levels needed for audio sidetone monitoring, their distortion is very low. They require 6 volts for operation, and this can be obtained in tube-type transceivers by a simple half wave rectifier and filter across the filament line. Fig. 2 shows a typical arrangement. For mobile transceivers they can be powered via a dropping resistor directly from the battery line.

The secret to obtaining maximum benefit from audio sidetone monitoring is in the adjustment of the sidetone level. You have to trick yourself, the same as the telephone company people do! Pick up your telephone and listen for the audio sidetone level as you speak to another party. It has been carefully chosen, as you will be inclined to "speak up" consistently rather than whisper into the handset. If the sidetone level were too loud, you would be inclined to speak more softly. If it is too comfortable to hear, you would be inclined to become intrigued with the reproduction of your voice, but not necessarily inclined to maintain a steady voice level. The sidetone level has been deliberately chosen so you *can just hear it*, and this is the adjustment to make for monitoring the audio sidetone level in a station. After a while, you will become unaware of the sidetone level, but you will try to speak at a consistent output level that allows you to detect the presence of the sidetone.

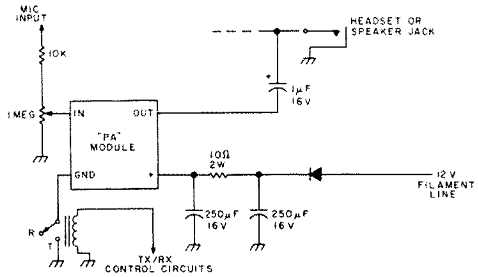

Fig. 2. Use of an inexpensive PA module amplifier provides audio sidetone with a minimum of circuit modifications.

Audio sidetone monitoring is a relatively simple accessory to add to any station. The simplicity of the idea has probably been obscured by the usage of so many other speech processing devices such as audio compressors and clippers. However, if one can add only 1 or 2 dB more effective transmission efficiency to a station by audio sidetone monitoring and completely without any added distortion of the modulated signal, the idea seems worthy of a try. ■

Ken Cole W7IDF
P.O. Box 3
Vashon WA 98070

Paolo

Amateur radio is a rewarding hobby; one dividend is a wider window on the world, and another is technical expertise, but I think that most important is the friends we make. Some we keep, but the currents of life eddy and some drift away — until a page in a logbook or a card in a file brings them back and we are caught in a net of memories. Recently I came across a memento that sent the years spinning — a phony British pound note.

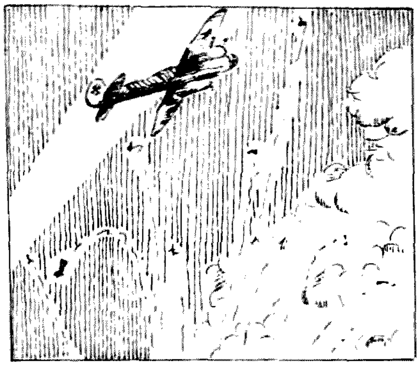

Illustrations by Carl Jackson

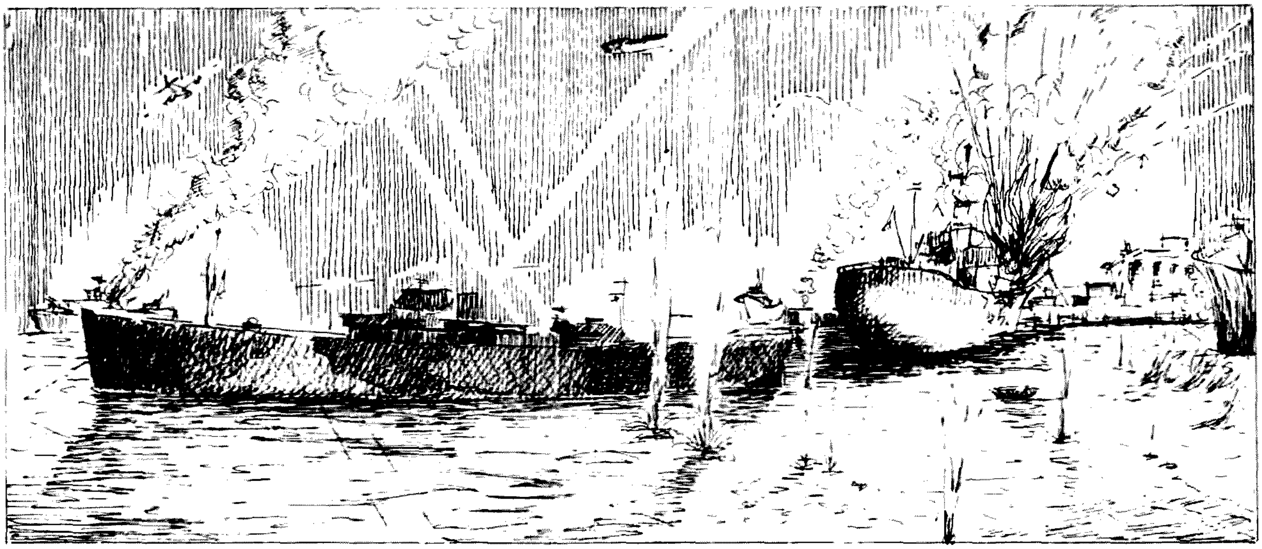

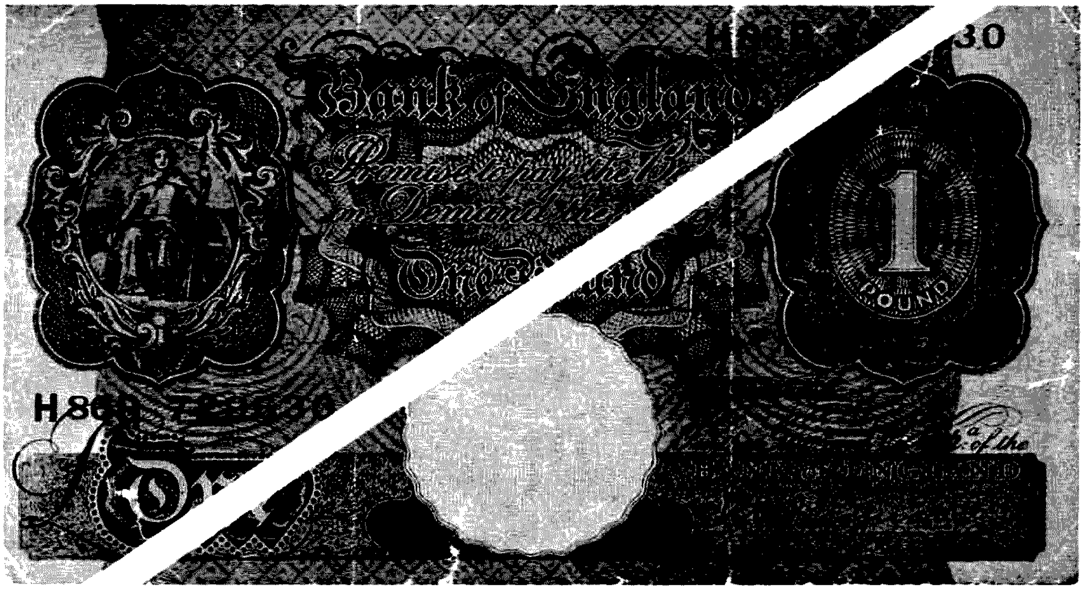

Paolo never told me his last name, and I forgot his call many years ago. It wouldn't do to mention it even if I could remember, not without knowing first how he arranged his life after the war. I'm satisfied that he isn't one of the few dozen licensed Libyan 5As; perhaps he finally went home to Italy, and one day he might see this magazine. I'd like to hear from him.

1943 opened on a note of optimism following the victories at Stalingrad and El Alamein, and the Eighth Army was pushing hard against the rear guard of the Afrika Korps. Steady pressure was essential to deny Rommel any opportunity to pause and exploit the defenses of Tunisia's Mareth Line. Montgomery required thousands of tons of supplies daily, and Tripoli was the new forward depot. Heroic work by underwater demolition and salvage crews had opened a gap through a blockade of seven ships the Germans had filled with concrete, booby-trapped and sunk in the narrow harbor entrance, and now the port was congested with laden freighters.

Along the Spanish Mole, on the seaward side, jetties were being worked around the clock, but the cargo handling facilities were limited and soon after sunset every evening the Luftwaffe arrived from Sicily. In the center of the harbor, in close company with wrecked Axis shipping and other Liberties newly arrived from Alexandria and Port Said, the *Edward Everett* was anchored awaiting space at the jetty. Our readiness to discharge the cargo of Crusader tanks packing the holds was unmatched, and every bomb that fell nearby added to our zealous impatience. So did the photo plane which checked the situation every afternoon and sped back to Sicily with tattletale negatives and our hearty wishes for a crash at sea.

Between us and the jetties along the mole where eventually we would unload our tanks, and about three hundred yards away, lay the *Empire Voyager*, down to the marks with thousands of tons of bombs and ammunition. Near her swung a tanker filled with aviation gas urgently needed in Malta, two hundred miles to the north. We paid

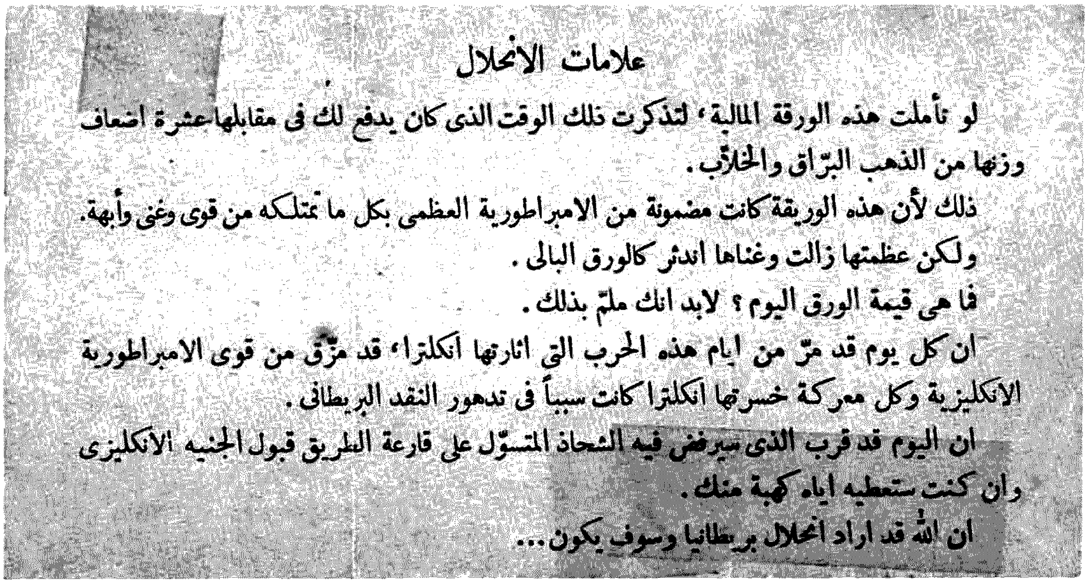
علامات الانحلال

لو تأملت هذه الورقة المالية، لتذكرت ذلك الوقت الذى كان يدفع لك فى مقابلها عشرة اضعاف وزنها من الذهب البرّاق والخلاّب.

ذلك لأن هذه الوريقة كانت مضمونة من الامبراطورية العظمى بكل ما تمتلكه من قوى وغنى وأبهة.

ولكن عظمتها زالت وغناها اندثر كالورق البالى.

فما هى قيمة الورق اليوم؟ لابد انك ملمّ بذلك.

ان كل يوم قد مرّ من ايام هذه الحرب التى اثارتها انكلترا، قد مزّق من قوى الامبراطورية الانكليزية وكل معركة خسرتها انكلترا كانت سبباً فى تدهور النقد البريطانى.

ان اليوم قد قرب الذى سيرفض فيه الشحاذ المتسوّل على قارعة الطريق قبول الجنيه الانكليزى وان كنت ستعطيه اياه كهبة منك.

ان الله قد اراد انحلال بريطانيا وسوف يكون...

homage to their courage with compassionate respect, and wished they weren't there.

Toward the west, where the root of the mole curved and joined the low profile of the city, were anchored more freighters and a destroyer. A minesweeper that kept us company on the trip from Alex, *H.M.S.A.S. Treen,* lay to the south between us and the city seawall. Next to it, and closest of the Allied vessels, a small coaster swung on one hook. Closer still, in fancy camouflage and obviously badly battered, the Italian motorship *Agostino Bertani* held our speculative gaze with her Latin grace. Displaying her raked funnel, low superstructure and seductive sheer in the midst of our motley flotilla, she looked like a badly used Maserati surrounded by old family Fords. A pelagic queen. Through the glasses we could see blast damage, twisted steel and scorched paint, but she was riding evenly and to the casual glance looked ready to depart for Genoa, her port of registry. The embarkation gangway was stowed, but a rope ladder hung from the stern, probably because of the barrage balloon floating from a cable secured on the fantail. In legal jargon the *Bertani* constituted an "attractive nuisance," for seamen are traditionally fond of visiting anything floating nearby. Besides, we were positive Italian vessels were fitted with enormous wine lockers. We had to find a way to go aboard.

Following the nightly raids, the British army would send a launch around the harbor, stopping at each anchored ship to pick up any wounded, and a friendly corporal thought of a way a skiff could be managed. There was no sign he thought it curious that anyone would want to go punting among the debris and oil slicks floating around us, and his only comment was, "Mind you don't bump into something wicked." This referred to a report that the bombers were dropping a new harbor torpedo which knew better than to miss a target and then continue to pointless self-destruction on the beach. Failing to bag a ship promptly, it would run mad circles just under the surface until the fuel was exhausted, then a ballast tank filled and it would float tail down, barely submerged, and wait for the unwary. So we would row very carefully.

W7IDF and Paolo (identity concealed).

The next afternoon the engine department cadet and I climbed the rope ladder to the fantail of the *Bertani* and made our way along the main deck and up to the bridge. The damage was worse than we had guessed, but the R.A.F. had pounded the harbor before the fall of Tripoli and now the Germans were taking their turn, so it was a miracle the ship was still afloat. Debris blown back and forth by dozens of raids obstructed passageways, and everywhere were bent shards of steel plate and twisted and severed stanchions. Fire had gutted the chart room, wheelhouse and radio room, and one deck below a bomb had exploded immediately after penetrating the midship deckhouse. The blast had torn everything apart just aft of the stack and down through the engine room, but a fast fuse had spared the hull. The foredeck and afterdeck were holed but strong; if the *Bertani* survived the current series of raids she would probably end up as an oil barge. She had been a handsome ship, and the visit was depressing.

Returning aft to leave, we remembered the putative wine stores and found several undamaged storerooms at the bottom of a companionway from the main deck. It was getting late, but we opened one more door, and there they were. Five or six large wine casks in a heavy timber rack along a thwartship bulkhead, and they were empty. The number is dim in my memory, but I recall clearly that they were a light-colored wood, which surprised me, and there was a small table in front of them. On the table lay a neatly folded pair of German army trousers, and beside them a half-empty tin of English cigarettes. We eyed these with speculation, and the drained casks with regret. "Time we got back," I said, and we left.

Later, as we were sitting in the saloon and conscientiously testing what was left of a case of Scotch retrieved earlier from longshoremen who had pinched it from army stores taken aboard at Port Said, the captain returned from a meeting ashore with the depressing news that we couldn't go alongside and discharge for another day or two. "Never mind the days," the messman said, "it's the nights that give me fits." Captain Miller just nodded and muttered his favorite expletive, "Got them!" A stocky Finn who looked like a nice Hermann Goering with muscles instead of fat, he spoke infrequently and with a thick accent that left us mystified about the ethnic roots of his name. "Got them!" sufficed for most occasions that called for comment, and began or ended the sentences demanded by special circumstances. We were amused by the phrase until events certified it as eminently apposite. The crew respected him, and to me Miller was the ideal skipper: professionally expert, totally unflappable, reserved but approachable. His silent kindliness and courage were importantly supportive, and I was to regret I lacked the wit to find a way to tell him so.

With the news that our idle status would continue, my thoughts turned to something I had noticed in a corner of the *Bertani*'s shattered radio room. It appeared to be the remains of an FuG 16, the 38 to 43 MHz wireless used in German fighter aircraft. Wary exploration of riddled Messerschmitts abandoned on Castel Benito airfield just outside the city had turned up nothing worth carrying away. Shards of canopy Perspex for shaping into bug paddles, and still in use today, but no FuG 16 for conversion to ten meters. Also, I wondered who was living on a bombed-out freighter anchored at target

center.

Promptly at seven-thirty that evening, while cargo was being worked under a few lights on the jetty, the alarm went. Within minutes the dark edge of the city reflected the cracking white flashes of antiaircraft batteries along the breakwater, the thunderous red blooms planted by sticks of bombs, and then, in the dark heart of the harbor, a ballooning ball of yellow flame from a tiny coaster hit squarely amidships. Suddenly the raid was over, the convulsive thud and crash of explosives sucked instantly into a stunning silence. Slowly hearing recovered, and a familiar hissing rose from the water as spent shrapnel fell back from the sky, now and then rattling on our steel. After another minute there was only the distant sound of burning, and from the dark anchored shapes faint hails as the medical launch called for wounded. As they came alongside, we were saddened to learn that the matey crew of an antiaircraft battery had been wiped out, a singularly cheery and nerveless mob of Londoners who had found entertainment in teaching us cockney slang. They had called themselves "The Tophatters" and were perversely amused to hear that their painted insignia was identical to that displayed by a Staffel of 109s the Luftwaffe sent to Spain in 1937. Now they were gone. In the city, apartment buildings had been hit as usual, and the coaster between us and the *Bertani* was still smoking and low in the water. Preparing for a visit to the *Bertani*'s radio shack in the morning, I put together a thief's kit of side-cutters, screwdrivers and small wrenches.

The next day began chilly and clear, with a cloudless blue sky and a steady breeze. In the harbor the chop was low, but to seaward the spray rose regularly and fell sparkling on the breakwater. Inshore small puffs of spume floated up from the old gray seawall fronting the low bone-white profile of Tripoli's villas. I was still astonished that the Mediterranean could be so cold, even in midwinter. North Africa had been a surprise from the first: windy and raw at Alex, and then barren brown hills curving from Tobruk down to Benghazi. Wondering what the Afrika Korps thought of their palm tree insignia, I put on a heavy wool mackinaw and a watch cap, and I suppose that's why I met Paolo.

Before noon, but later than I had planned because I had listened to the sexy lady news announcer from Radio Sofia and her report, rather premature as it turned out, of a conclusive *Bestrafung* of Tripoli harbor, I was again aboard the *Bertani*, alone this time, with a bag of tools and, just in case, a bottle from our store of liberated Scotch. Everything looked the same as before, but somehow there was a subtle difference. Three hundred feet in the air the balloon weathervaned into a cold north wind, and three or four miles above it the daily photo plane was a tiny speck, returning home with negatives showing a small coaster still afloat but down by the stern and perhaps a crater where our cockney friends had nightly stood watch to protect us.

The battered box lying on the deck in the radio room was indeed an FuG 16, but it was in bad shape. Neither of the two bandswitches would budge, and a look at the back showed why they wouldn't. Apparently the deadlight blown from the porthole opposite had struck the rear panel and crushed the insides. No hope. Some earlier scrounger had better luck, judging from the vacant mounting brackets and empty spares lockers. Stubs of severed copper tubing protruded from the antenna lead-in bowl insulators, but a half dozen Pyrex standoffs had been left on one bulkhead. I was unscrewing one of these when I got a message that I wasn't alone and turned around.

Captain Miller.

In the doorway a young man of medium height was smiling at me. Dark curly hair, khaki sweater and pants. At first I assumed his motives were mine: curiosity and larceny. "Hi," I said, "somebody didn't leave us much." For a moment he just looked at my coat. Still smiling he said, "Buon giorno." Oh dear, I thought, The Enemy. "Buon giorno," I replied. "You speak English?" He shook his head. Why hadn't I studied my Italian phrase book? Only one sentence came to mind, and after a thoughtful pause I said, "Un biglietto per Milano, per favore." A ticket to Milan, please. He laughed and put out his hand. Amenity established, I removed my coat and from the game pocket carefully drew out the bottle of Scotch, wondering how many of Mussolini's finest were tucked away in the *Bertani*.

In an effort to communicate, we discovered common ground in German and Spanish, with Paolo favoring one and I the other, and in a loony patois we told each other who we were, traded souvenir recollections of life at home, and confided some of our hopes for the halcyon days of peace we foresaw with naive certainty. While we talked, I unscrewed the standoffs, and Paolo, an active ham for years and more lately a radio technician in the Italian army, applied himself expertly to the FuG 16 and filled my coat pockets with parts. Sensing my curiosity, he talked about his life before the war, pausing now and then to find the right phrase, silent at times for a minute or two when memories crowded and blocked the flow.

Paolo's father, a politically active civil servant, ardently Fascist, insisted that his son postpone his university studies and volunteer for service in Spain. That was in 1937, when Paolo was nineteen. Training was brief, with emphasis on parading, and he soon embarked for the Spanish Civil War with General Roatta's Black Flame Division. Before the year was out he was thoroughly disillusioned and when, during the Italian attack from Algora toward Guadalajara, a bomb fragment sent him home for recuperation and discharge, he thought himself lucky. Working again on his own equipment instead of military signals gear raised his spirits;

The Agostino Bertani.

soon he was fit and bearing down hard on electrical engineering texts. He recalled this as "the happiest time of my life." It was a short reprieve. Putting Franco in power had been an easy first step, and soon German boots were marching through one country after another. The Italian army told Paolo his technical skills were very highly regarded and issued him a new uniform. He was grateful to miss out on Mussolini's glorious calamities in Albania and Greece, but those defeats guaranteed him a ticket to Tripoli. The Germans, appalled by the Italian fiasco in Greece, moved in swiftly, and their success drew a gallant but sacrificial counterattack by a British expeditionary force from Egypt, critically draining an army which had just chased the Italians back across the Western Desert. To exploit this weakness the Germans promptly invested armor in North Africa, and soon the Afrika Korps was leading a revitalized Italian army toward the Nile. Paolo would spend more than a year nursing its radios.

His first assignment was months of easy depot duty at Tripoli, thanks to the German he had learned in Spain, but in the summer of 1941 Rommel pressed hard against the British and Paolo was posted to the Ariete Armored Division and the delights of front line maintenance of poor radio equipment in obsolete M.13 tanks. There were about a hundred and fifty of these and many of them weren't fitted with radios, but this made it all the more important that in those that had them the radios worked. Keeping the mobile gear operational in spite of the dust, heat, concussion and constant vibration was a maddening task.

Paolo's stories of equipment failure, troubleshooting and repair soon brought up the subject of ham gear and our personal preferences and experiences. We argued the advantages of our favorite antennas and agreed that CW was far more satisfying than phone. Before long we were comparing DX notes, recalling more or less accurately the best of the miracles recorded in our logbooks at home, and in cordial competition modestly attributing our feats to luck rather than technical prowess. Paolo scored heavily when he mentioned that his first West Coast contact was W7CSF. The call has been reissued but my good friend Dick Rose held it then, and I remembered clearly his announcing one evening that he had just worked the first Italian he had ever heard. Probably I responded with rude noises indicating disbelief, and I could foresee his smile when I confirmed the contact with a report of this meeting. I didn't tell Paolo Dick had never received his QSL.

Suddenly I realized that the sunlight from the porthole had moved from the deck into the passageway, and it was time to leave. Paolo had volunteered nothing about his present circumstances, and as I collected my tools, I tried without success to think of tactful questions. We shook hands and he asked me if I would come back the next day. I said I would. Together we made our way through the battered passage, but Paolo wouldn't come out on the open afterdeck, and as I left him I asked if he needed anything. He shrugged and smiled. "I have food," he said.

There was hardly a ripple on the water. As I rowed I kept the transom centered on a tall palm behind the seawall, where peddlers hawked triangular paper packets of dates and almonds. The late sun on the low white buildings made sharp silhouettes of the trees – a travel poster view of friendly Tripoli. Halfway back I was pleased to retrieve two floating empty bottles as a present for my corporal friend who had asked if we had any on his first visit to the *Everett*. The Afrika Korps had charitably left behind an impressive stock of German hops and Hungarian barley at the Oea brewery (Oea was the old name of Tripoli), but bottles were in short supply and everyone was on the alert for empties. Minutes after I boarded the *Everett*, the gunnery officer knocked on my door and spotted the empty bottles. He hadn't believed my report of the empty wine casks on the *Bertani*, but something else was on his mind. "Churchill sent his apologies," he said, "and they'll take our tanks off tomorrow."

That night the Luftwaffe ignored us and the following morning the Crusader engines were roaring and backfiring in the holds, ready to go as soon as they were landed and the bridles freed. It was noisy and exiting but I left early, allowing for the longer trip from the breakwater against a low chop in the harbor. The wind had shifted and there was a suggestive haze in the southern sky. Torrents of rain and rotten visibility would be nice, I thought, rowing steadily, my feet pushing against a carton packed with old copies of *"QST,"* British ration "V" cigarettes, a flashlight and a box of spare batteries. In memory of the *Bertani's* vanished wine stores there were two bottles of vile Australian sherry.

Paolo was waiting for me in the radio shack, obviously pleased to have company again. It struck me that he was impressively neat and clean and his manner rather blithe and easy for a lonely fugitive, truant from a retreating army. In your shoes, I thought, I'd be wary and glum and look very scrubby. Stacking the magazines on the deck, I put the flashlight and batteries next to them and held up one of the bottles of wine. "For emergency use only," I said, thinking of his Italian palate. "Thank you very much," Paolo said, dismissing my deference with a smile. Opening one of the cigarette packs, he took two out, and after we lighted them he brought a small bundle from a corner of the room. Turning back a fold of canvas he handed me an Italian helmet. Inside was a Beretta automatic, and on top of it a British pound note. "For the emergencies," he laughed, and turned the note over to show me the back was covered with Arabic. "German counterfeit. Propaganda. It says here that the word of England is as good as this money, but I am very sure that they will both

be worth more, pretty soon, when this war is over." "Agreed," I replied, "Unless the English try exporting this tobacco."

I thanked Paolo for his gifts, and, after a brief explanation of Beretta design, disassembly and cleaning, he withdrew to silent concentration on the circuits and advertisements in the magazines. I fiddled with the gun for a while, but then my curiosity overcame qualms about prying and I asked him why he was waiting out the war in the center of a harbor where a night without a raid was an exception. He kept flipping the pages and smiled without looking up. The antiaircraft fire was so intense, he said, that hits on shipping were unlikely. The center of the target was the best place to be and the worst was the outside ring, from the jetties into the harbor side of the city. The latter was believable; during every raid we saw bombs bursting among the apartment and office buildings, and there were piles of rubble along the main streets, gaps and debris where there had been villas and shops, and every afternoon at four or five o'clock a flow of people into the countryside where those who couldn't find shelter slept in the fields. But the safety of the harbor center was relative and poor consolation, and Paolo's reply hadn't answered my question. He put down the magazine and gravely inspected the flashlight. Long minutes of silence. Sadness touched his face and I regretted my curiosity.

"Spain," he said, speaking very slowly, "was reality, and we had been prepared for it with lies. Germans fought Germans there, and Italians fought Italians. It was a bad time, and we understood nothing. Afterward, in the engineering school, I was just glad to study and not think about politics. Then, in 1940, suddenly Italy was in the war. Many people, like my father, said Mussolini acted to protect us from Hitler because France and England betrayed us during the Austrian Anschluss. They told each other that the fighting would soon be over, that Germany already had all of Europe except Italy, and that it would be our turn next if we didn't agree to a military alliance. Our first easy victories here in Africa left us foolishly optimistic, but before long the English pushed us back, things got very bad quickly, and defeat was close. We were ready to give up when the Germans arrived in February of '41, here in Tripoli. Now they are gone and I think it will soon be over."

Paolo stood up, stared out the porthole for a moment and lit another cigarette. "I am talking too much." I said nothing. "Rommel was too much for the English, but he should have been here in the beginning. Even before El Alamein I knew we would have to turn back. Supplies weren't getting through from Italy. The sinkings were increasing at the same time that Montgomery was getting more and more through Suez from America. Marshal Cavallero kept promising that fuel for the tanks would arrive immediately, but we knew he was lying. Less and less got through. It was hopeless."

During one of Rommel's efforts to stiffen Axis morale by mixing Panzer units with the Italian regiments, Paolo's combination of language and technical skills were noted and he found himself in a liaison assignment untying communication knots. Access to all Italian and German radio nets confirmed his feeling that disaster was inevitable.

"After Alamein," he continued, "I stayed with the 15th Panzer. There wasn't nearly enough transport for the retreat, so I rode with the Germans. Otherwise, I would have been in the bag and spent the rest of the war in a stockade in Egypt. I knew if I got back to Tripoli my friends here would help me."

Rommel hardly slowed for Tripoli. At Castel Benito, Paolo walked away from the war. He unbuttoned a shirt pocket, drew out a leather folder and opened it to show me a picture of a very pretty dark-haired girl standing with him in the Piazza Italia. She was wearing a white dress and smiling at the sun dial on the wall of Tripoli Castle. "I'm going to stay here," Paolo said. "We are going to be married some day. When I came here from Italy I was billeted with Antonia's parents, and now they are helping me as much as they can. An English civil administration officer is living in the room I had, and he brings

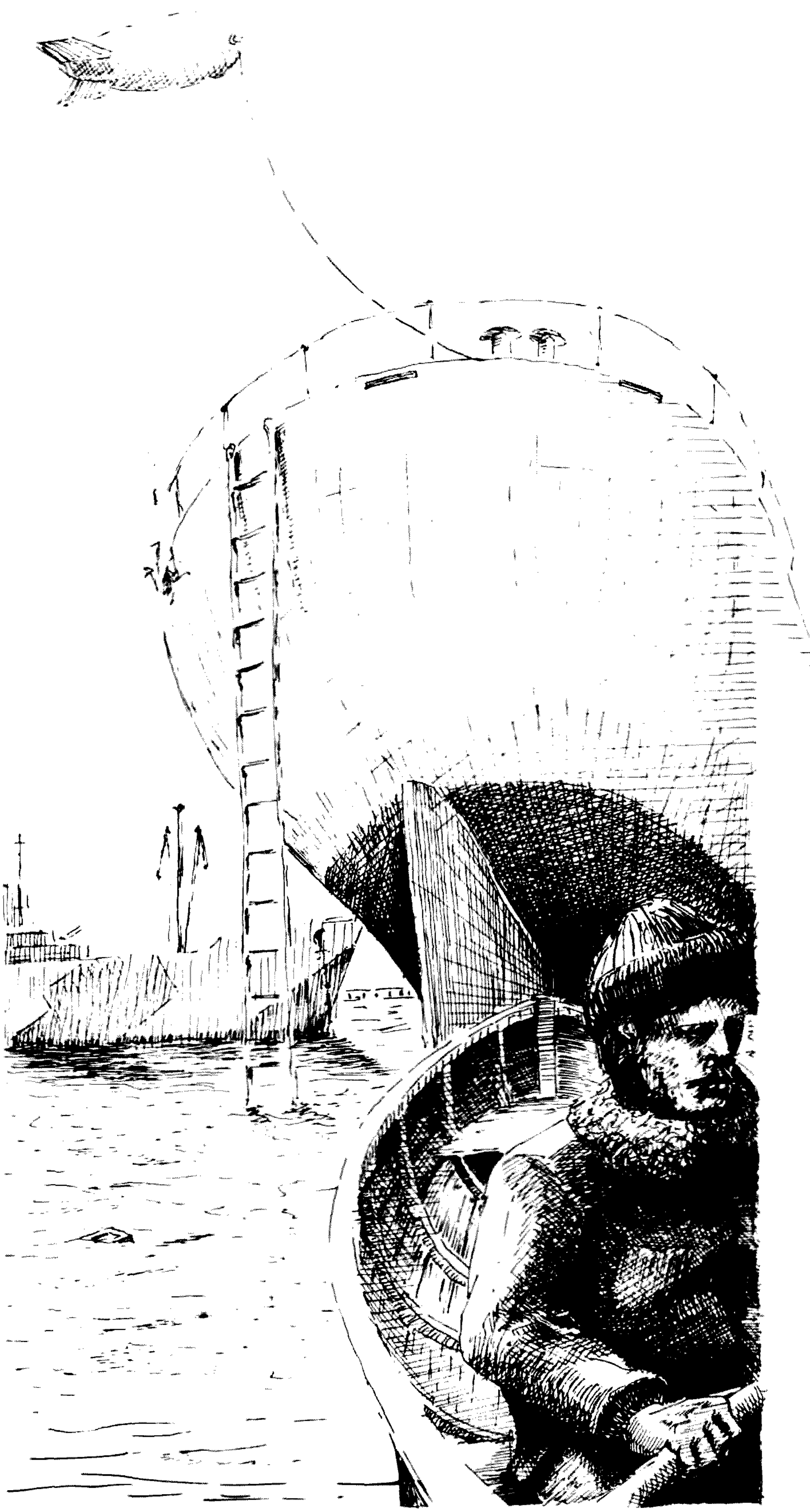

them extra food for me."

"She is very attractive," I said. "I hope everything goes well." I carefully printed my name and address on a scrap of cardboard and held it out. "When you can, write to me about the wedding."

"I promise," he said. "Soon now, the planes will be bombing Sfax instead of Tripoli, and it will be quiet here. Then the Germans will be defeated in Tunisia and the war in Africa will be over. It won't be long."

"And then?" I asked.

"Then the Mediterranean will belong to the English navy. Italy will surrender, and before long," Paolo smiled, "Antonia and I will be living on a small farm outside Tripoli."

"What do you know about farming? I thought you grew up in a city."

"I lived in a city, but I grew up in Spain and Africa." He shrugged his shoulders. "Anyway, Italians are all good farmers. Good builders and good farmers."

Years later I recalled Paolo's remark as I read of a letter Rommel wrote to his son, Manfred. Referring to the Italians, he said, "Certainly they are no good at war, but one must not judge everyone in the world only by his qualities as a soldier – otherwise we would have no civilization."

"Goodbye, Paolo," I said. "We may leave tomorrow. Good luck, and don't forget to write. When we're on the air again we'll arrange a schedule."

"Of course! With a farm there is plenty of room for antennas, you know." He was silent for a minute. "That is in the future. Today I am a deserter from the Italian army in time of war; I am engaged to a Jewish girl and being fed by an enemy officer while I wait for my country to surrender. I wonder what my father would think. Well, this will soon be over. Now, goodbye."

He waited in the shadow at the end of the passageway

until I waved from the stern and climbed down the ladder. As I rowed away, I wondered why Paolo hadn't found a safer place to await the surrender he expected in a few months (seven, it turned out), but I thought I knew. There were many Italians still in the area, but they were not men of military age or inclination. They were middle class, middle-aged or older, merchants and colonial farmers. They weren't on the streets much during the week, but leaving the Cattedrale di Sacro Cuore after Sunday morning mass they were surprisingly cheery, friendly, quite willing to converse with the strangers who had taken over their city. With unexpected candor, some would even defend Mussolini, insisting that he had been deceived by his ministers, and most agreed that the best chance for a happy solution lay with Prince Umberto and the diplomat Dino Grandi. And at some point in every conversation the lament would be repeated: "If only Marshal Italo Balbo were still alive!" In defeat, their fervent nationalism was as important as the fat on a hibernating bear. We listened to them with surprise, and then with dismay and a certain uneasiness. No, I didn't think that Paolo, a deserter, could have found much compassion in them. Probably they would promptly have turned him in and with relish sent the bad news to his family.

As I boarded the *Everett*, the last of our Crusaders was ashore, and the booms were being topped. The hatch covers dropping into place between the strongbacks made a very pleasant noise, rather like a gangway lowered smartly to the dock in some neutral port ablaze with nightclubs. The pretty balloon I was inflating promptly was pricked by a news bulletin from the deck cadet, and I went into the saloon for coffee and sympathy. The messman was humming "Sheik of Araby" and wiping the tables with special flourishes. "My prayers have been answered," he said. "One more night on the hook and tomorrow back to the fleshpots of Egypt!" "Well," I said, "you didn't pray hard enough. The latest word is a quick turnaround at Alex and back to Sfax with a full load of cased gas." He whimpered plaintively and lifted a corner of his apron to his eyes. "Boo hoo, and I'll never see my dear family again." Bathos was acceptable. "My hearfelt congratulations," I said. He poured our coffee and we sat in silence. I was thinking that I still wouldn't want to trade places with Paolo.

When we had pulled out and anchored again near the *Treen*, there was an hour of winter daylight left. We expected a visit from Sicily at the regular time, and perhaps a little something extra saved for us from last night's break in the routine. With this in mind, I went into the wheelhouse to experiment with an aircraft warning device H.M. Signals had installed during a shuttle to Beirut for the Ministry of Sea Transport when the area was being harassed by planes from Crete. We had heard about radar, of course, and observation of the bedspring antennas on battleships and cruisers gave us a clue to the frequencies, but we couldn't guess the secret of generating power pulses adequate to provide useful reflections from targets at fifty or a hundred miles. The magnetron was an enigma well-guarded. And the Royal Navy desperately needed more radar, so none was allotted to merchant ships; however, a British Marconi had come up with a jury rig warning system. In essence this consisted of a tuned amplifier driving an alarm bell noisy enough to alert any pilots who hadn't already spotted us, fed by two masthead microphones separated by an acoustical baffle. Theoretically, shipboard noise was

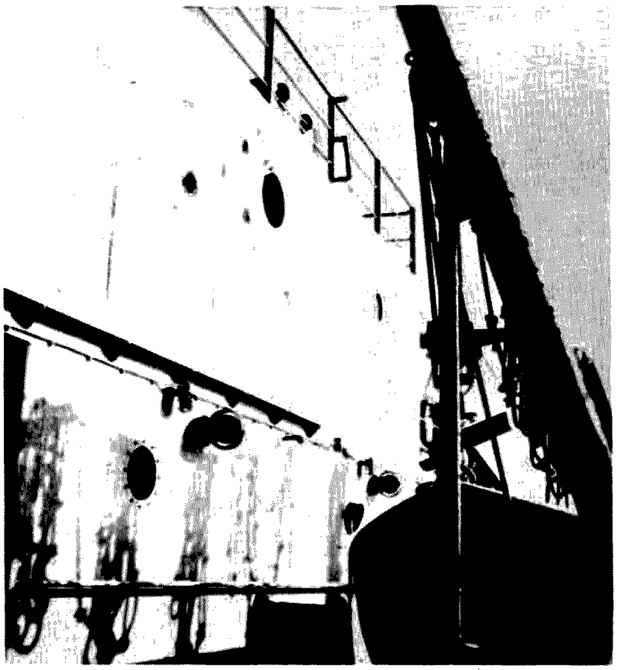

The near miss at Miller's porthole. Note hole in lifeboat bow.

picked up by both mikes and canceled, leaving only the bad news to excite the amplifier. The passband was narrow and tuned, according to the skeptical, to guttural German. The optimistic among us assumed the peaking frequency had something to do with audio quality common to BMW, Daimler-Benz, Jumo and Gnome-Rhone engines. In fact, the only time it went off was when the saloon messman climbed atop the wheelhouse and blew patiently into a beer bottle. He was promised that a second demonstration would ensure his disappearance at sea.

Now it was dark. The sun had set after a brief pink illumination of thin webs spun high overhead by a slow shifting of upper winds. I could sense prayers for cloud cover rising like smoke in the still surface air. Cargo was being worked on a ship already secured in the berth we had left, and bright lights along the mole silhouetted the *Empire Voyager*, still at anchor, low in the water and showing no lights. In the southern sky stars glittered, but none were visible to the north; there was a light drizzle and I wondered if the weather people on Sicily were forecasting a low ceiling at Tripoli.

There was no warning. A Ju88 appeared over the breakwater, framed by the Voyager's masts, cannon and machine guns winking orange and yellow. Then there were three more, wingtip to wingtip, and bombs were already bursting ashore and in the water as I ran for shelter, portside and down the ladder. At once there was a furious rattling as bullets raked the *Everett*, along with a sharp bang when a 20mm shell exploded against the concrete facing outside the captain's quarters, missing his porthole by inches. From the breakwater around the harbor and on into the city, bomb hits glowed red at neatly spaced intervals, and as the storm of noise died away, fire bloomed from a small vessel on our starboard bow. A quick check indicated we had only superficial damage from gunfire, and none of the bomb explosions in the harbor had been close enough to hurt the hull. Even in the dark it was obvious that we came close to qualifying as bullet-riddled. Perforations in

Tripoli: night raid.

the deck ventilators were back-lighted rubies, and from inside the holds the starboard side looked like a planetarium, but most of the hits were high. Ahead lay a painstaking survey of all the running gear; it wouldn't do for a nicked winch runner to drop a tank down a hatch. Luckily, no one had been on deck on the wrong side, but a visitor from another ship had a leg wound from a ricochet that entered a passageway, and I had steel splinters in one knee. The *Bertani* wasn't visible and I hoped Paolo had been below, shining his flashlight on a magazine.

After a short coffee session in the saloon, the messman was clearing away the cups and we were alone. "Got them!" he said, quoting the captain. "The old man thinks those brave lads must have flown right on the water for the last fifty miles. He said they probably had orders to light a beacon here and we'll get it again in a few minutes." I agreed. It was the first really low level attack since our arrival and, in view of the drizzle and broken ceiling, probably a pathfinder.

Returning to my room, I paused on the boat deck to listen. As the wavering beat of distant engines rapidly grew louder, narrow white searchlight beams flicked on, one after another, from among the fires ashore. This time the antiaircraft gunners were ready, and suddenly all batteries were firing, white flashes lighting up the harbor crescent from the mole to the city. Immediately bombs hit a destroyer and a tanker west of us, and a plane ablaze went into the water just beyond the *Bertani*. Overhead, white in the probing searchlights, bombers seemed to hang in the sky, unconcerned and irrelevant to the turmoil below. Our 20mm Oerlikons, which with a minute's warning might have scored against the first low attack, were useless now, but a sharp crack from the three inch gun on the bow told us that events had exhausted its crew's patience with the harbor rule that merchant ships were not to fire without orders. The battle phone circuit forward was dead, later found to be shorted by a pin through the cable, and the Navy gun crew was firing as fast as it could reload.

Aboard the Bertani.

Burning gasoline and oil had spread over perhaps a third of the harbor, when another flight of bombers came over. The crashing, thudding and jarring increased in intensity. A ship near the breakwater was hit bow and stern, and a burning plane broke up against a salvage vessel near the harbor gate. Our clothes were whipped by concussion as we stared at the *Empire Voyager* – eight thousand tons of explosives aboard and she was on fire. On our other side a Liberty, the *Sam Parker*, slowly moved through the smoke between us and the *Bertaini*, headed for the harbor gate and open sea. Soon other ships, backlighted by fires and then hidden by smoke, were making their way carefully out of the harbor. The antiaircraft guns stopped firing, gun by gun, but explosions continued around us and orange tracers arced away from the *Voyager* as heat set off ammunition on deck. She was aflame from stem to stern.

I had just left the port wing of the bridge for my room to get a flashlight, with some idea of blinking it at Paolo, when the *Voyager* exploded. A brilliant orange flash lighted the passageway and our ship lifted, trembled and fell back, rolling to port and then righting. The sound was something more than noise, a tremendous sharp thud that made my head hurt and left me deaf for a moment. Then a mixture of sounds – everything that could move was clattering, knocking against something else. After a bit, I ventured out on the boatdeck. Debris was hissing into the water and rattling onto the decks, and now and then a heavy piece from the *Voyager* rang on our steel. The air was filled with muck blown up from the bottom of the harbor, but soon it cleared and in the glow from burning oil I could see the *Bertani* was still afloat. Poor Paolo, I thought; you could be in a nice safe POW camp at Ismailia with a view of the canal.

The rest of the night was spent collecting our wits, drinking coffee and checking for serious damage. Below the waterline the hull was whole, but the oil burning where the *Voyager* had been showed our starboard side to be well scarred. The decks were littered with iron from the sky, and coated with slime from the bottom of the harbor. Dents showed where heavy pieces had struck and bounced over the side; the gun tubs were badly chewed and one lifeboat was holed,

but all the wounds we found were superficial. "Got them!" the captain muttered, meaning he was mystified by our good fortune, and so were we all.

It was nearly dawn when orders were brought aboard for departure for Port Said, and I tried again to raise Paolo with the light. I had decided that if I saw no blinking reply the possibility that Paolo was hurt and needed aid would justify confiding in the corporal. Minutes passed and no luck. The launch would be leaving soon. I had just about given up when the answer came: "OK OK OK god luck god luck." The misspelling struck me as inspired.

Hurrying with our last bottle of Scotch, I caught the corporal at the ladder as he was telling the captain that one of the *Voyager*'s boilers had flown over the city and come to earth in the suburbs, and one of her guns had dropped onto the salvage ship at the harbor gate. "Got them!" Miller said, rubbing his nose thoughtfully. "Ta," the corporal smiled as he took the bottle, "come again soon."

The wind was picking up from the north, sweeping away the clouds and fanning fires around the harbor, and the first gray light revealed that the *Bertani*'s barrage balloon had pulled free during the night. I thought of its passage, a spectral mystery in the sky blocking out the stars as it sailed noiselessly over the Sahara, and then in the sunshine a delight to the Tuaregs who would turn it into tents and a fable.

In a couple of hours we were under way, leaving behind us a dispiriting scene. The destroyer had been beached and lay at a sad angle near the seawall; near it spray rose now and then, as demolition crews exploded torpedoes or mines; oil slicks were still burning on the water and streamers of black smoke drifted into the city. As we moved slowly past the *Bertani*, her lines again drew our admiration. She was still riding evenly, but the foremast was canted aft at a new angle, a bit rakish but not really inappropriate. From a wing of the bridge I waved goodbye.

Soon Tripoli was just a line on the horizon. It could have been Boston or Sydney.■

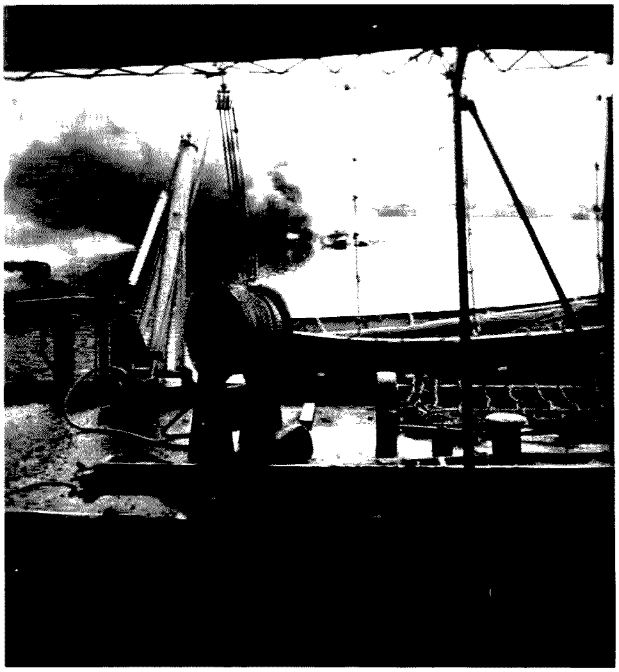

Unidentified remains.

WHAT HAVE YOU MISSED?

The back issues of 73 are a gold mine of interesting articles . . . just take a look at what's been covered . . . every possible interest. This is the most important library you can have for hamming.

The supply of these back issues is very limited . . . and when these are gone, that will be it. Don't miss out by procrastinating.

Single issues . . . . $1 each (before 1976)
Ten back issues (your choice) . . . . . $12 postpaid in US.
Twenty-five back issues (your choice) $20 postpaid in US.
Twenty-five back issues (our choice) $10 postpaid in US.

JUNE 63. Surplus Issue: DMQ-2 Beacon Tx on 220, increasing ARC-2 transceiver selectivity, PE-97A pwr supply conversion, BC-348 bandspread, inductance tester, converting BC-230 tx, beginner's rx using BC-453, recvr motor-tuning, transistor cw monitor, BC-442 ant relay conversion, mobile loading coils, increasing Two-er selectivity, TV with the ART-26 tx, TRC-8 rx on 220, ARC-5 hf rx & tx, ARC-3 tx on 2M.

AUG 63. Battery-op 6M stn, diode noise gen, video modulation, magic T-R switch, ant gain, halo mods, cw breakin, VEE beam design, coax losses, RF wattmeter, TX Tube Guide, diode pwr supply, "Lunchbox" squelch, SWR explanation, vertical ant info, info on Windom ant.

OCT 63. WBFM transceiver ideas, HF propagation, cheap fone patch, remote-tuned Yagi, construction hints, ant coupler, $5 Vertical, filament xformer construction, 2M nuvistor converter, Lafayette HE-35 mods, Buyer's Guide to Rx & Tx, product detector, novel Hi-C VFO, radio astronomy, panadaptor "if" converter, compact mike amp.

FEB 64. 2M multichannel exciter, rx design ideas, majic t/r switch, loudspeaker enclosures, 40M 2W tx, look at test equipment, radio grounds, 40M ZL Special ant, neutralization.

MAY 67. Quad Issue: 432 Quad-quad-quad, expanded HF quad, Two el quad, miniquad, 40M quad, quad experiments, half-quad, three el quad, 20M quad, tiltover quad, easy-to-erect quad, Quad Bibliography, FET vfo, tube troubleshooting, HF dummy load, understanding "dB," HF SSB/cw rx, geometric circuit design, GSB-201 transceive, FET converter for 10-20M, hi-pass rx filters.

JULY 67. VE ham radio, VE0 hams, dsb adaptor, home brew tower, transistor design, '39 World's Fair, gnd plane ant, G4ZU beam, SSTV monitor, UHF FET preamps, IC "if" strip, vertical ant, VHF/UHF dipper, tower hints, scope monitoring, operating desk, S-Line crossband, hi-school ham club, Heath HR 10 mods.

OCT 67. HF solid state rx, rugged rotator, designing slug-tuned coils, FET converter, SSTV pix gen, VHF log-periodics, rotatable dipole, gamma-match cap, old-time dxing, modern dxing.

JUNE 68. Surplus Issue: Transformer tricks, BC-1206 rx, APS-13 ATV tx, low voltage dc supply, surplus scopes, FM rig commercial xtal types, Wilcox F-3 rx, restoring old equipment, 75A1 rx mods, TRA-19 on 432, freq counter uses, transceiver pwr supply, uses for cheap tape recorders, Surplus Conversion Bibliography, RT-209 walkie on 2M, ARC-1 guard rx, RTTY tx TU.

JULY 68. Wooden tower construction, tiltover towers, erecting a telephone pole, IC AF osc, "dB" explained, ham club tips (Part 1).

SEPT 68. Mobile vhf, 432 FET preamps, converting TV Tuners, xtal osc stability, parallel-Tee design, moonbounce rhombic, 6M xciter (corrections Jan 69), 6M transceiver (corrections Jan 69), 2M dsb amp, ham club tips (Part 3).

NOV 68. SSB xtal filters, solid state troubleshooting, IC freq counter (many errors & omissions), "cv" transformers, space comm odyssey, pulsar info, thin-wire ants, 40M transistor cw tx/rx, BC-348M double conversion, multifunction tester, copper wire specs, thermistor applications, hi-voltage transistor list, ham club tips (Part 5).

JAN 69. Suppressor compressor, HW-12 on 160, beam tuning, AC voltage control, 2M transistor tx, LC power reducer, spectrum analysis info, 6M transistor rx, operating console, RTTY autostart, calculating osc stability, lo-pwr 40 cw tx, sequential relay switching, sightless operator's bridge, ham club tips (Part 7).

FEB 69. SSTV camera mod for fast-scan, tri-band linear, selective af filter, unijunction transistor info, Nikola Tesla biography, mobile installation hints, extra-class license study (Part 1).

MAR 69. Surplus issue: TCS tx mods, cheap compressor/amp, RXZ calculations, transistor keyer, better balanced modulator, transistor oscillators, using blowers, halfwave feedline info, Surplus Conversion Bibliography, extra license study (Part 2).

APR 69. 2-channel scope amp, rx preamp, Two-er PTT, variable DC load, SWR bridge, 100 kHz marker gens, some transistor specs, SB-610 monitorscope mods, portable 6M AM tx, 2M converter, extra license study (Part 3).

MAY 69. 2M Turnstile, 2M Slot, rx attenuator, generator filter, short VEE, quad tuning, using antennascope, measuring ant gain, phone patch regs, SWR indicator, 160M short verticals, 15M antenna, HF propagation angles, FSK exciter, KW summy load, hi-power linear, extra license study (part 4), all band curtain array.

JUNE 69. Microwave pwr generation, 6M ssb tx, 432-er tx/rx, 6M converter, 2M 5/8 wave whip, UHF tv tuners, ATV video modulator, UHF FET preamps, RTTY monitorscope, extra license study (part 5), building uhf cavities, mini-VEE for 10-20M, vhf vfo.

JULY 69. AM modulator, SSTV sig gen, 6M kw linear, 432 KW amp, 432-er tx/rx, 6M IC converter, radio-controlled models, RTTY IC TU, audio notch filter, VRC-19 conversion, tube substitution, 2M transistor xciter, extra license study (part 6), hf FET vfo.

AUG 69. FET regen for 3.5 MHz up, FM crystal switching, 5/8 wave vertical, introduction to ICs, RTTY tone gen, good/bad transistor checker, 2M AM tx, measure transistor Ft, 160M propagation, triac applications, simple IF sweep gen, transistor keyer, SB-100 on 6M, xtal freq measurement, extra license study (part 7), FM deviation meter, qrp am 6M tx, circular quads, FM noise figure, transistor parameter tracer.

SEPT 69. Tunnel diode theory, majic tee, soldering techniques, wave travel theory, cable shielding, transistor theory, AM noise limiter, AFSK gen, transistor amp debugging, measure meter resistance, diode-stack pwr supply, transistor testing, 2½W 6M tx, HX-10 neutralizing, capacitor useage, radio propagation, AM mod percentage, extra class license study (part 8), 3-400Z linear, ATV vidicon camera, 2 transistor testers, FET compressor, rf plate choke.

OCT 69. Super gain 40M ant, FET chirper, telephone info, scope calibrator, thyrector surge protector, slower tuning rates, identify calibrator harmonics, FM adaptor for AM tx, CB sets on 6M, proportional control xtal oven, xtal filter installation, Q-multiplier, transceiver pwr supply, extra class study (part 9).

NOV 69. NCX-3 on 6M, IF notch filters, dial calibration, HW32A external VFO, 6M converter, feedline info, rf z-bridge, fm mobile hints, umbrella ant, 432-er tx (part 1), pwr supply tricks with diodes, transistor keyer, transistor bias design, xtal vhf sign gen, electronic variac, SB33 mods, extra class study (part 10), SB34 linear improvements.

DEC 69. Transistor-diode checker, dummy load/attenuator, tuned filter chokes, bandswitching Swan 250 & TV-2, 88mh selectivity, match exercizes, rtl xtal calibrator, transistor pa design, hv mobile p.s., 1-10 gHz freqmeter, CB rig on 6M, extra license study (part 11), 1970 buyer's guide.

JAN 70. Transceiver accessory unit, bench power supply, SSTV color method, base-tuned center-loaded ant, 6M bandpass filter, extra license study (part 12, rectifier diode usage, facsimile info.

FEB 70. 18-inch 15M dipole, 6M converter, high-density pc board, camper-mobile hints, 2M freq synthesizer, encoding/decoding for repeaters, DX-35 mods, panoramic vhf rx, variable-Z HF mobile mount, extra license study (part 13), linear IC info, qrp 40M tx, IC Q-multiplier.

MAR 70. Gdo applications, charger for drycells, FM freq meter, pc board construction, ham tm standards, cheap rf wattmeter, multifreq fm osc, "IF" system modules (part 1), Six-er mods, gdo dip lite, Motorola 41V conversion, cw monitor, buying surplus logic, SSQ-23A sonobuoy conversion, GRC-9 rx/tx conversion, extra class study (part 14), intro to vhf fm.

APR 70. Noise blanker, 2M hotcarrier diode converter, repeater controller, understanding COR repeater, 7/8-wave 2M ant, extra class study (part 15), inexpensive semiconductors, removating surplus meters, linear amp bias regulator, hi performance if amp & agc system, SSB bfo for shortwave radio, vacuum tube load box, general fm dope & repeater guide, meggering your ant.

MAY 70. Comments on "fm docket" #18803, future of cw, fm-am rx aligner, 5/8-wave verticals, using 2M intelligently, auto burglar alarms, pwr supplies from surplus components, "IF" system modules (part 2), vhf FET preamps, educated "idiot" lites, postage-stamp 6M tx, extra class study (part 16), Bishop IFNL, low-band police monitor, mobile cw tx, Wichita auto patch.

JUNE 70. DDRR ant, vfo circuit, remote SWR indicator, indoor hf vertical, two rx on one antenna, environment & coax loss, 2-el trap verticals, buying surplus, two 40M qrp tx, 21dB 2M beam, extra class study (part 17).

DEC 70. Solid-state vhf exciter, delta fre control for SSB, 2M transistor FM tx, HW100 offset tuning, "little gate" dipper, 3-500Z hf linear, general class study (part 5), "transi-test" (no good — errors!), transistor p.s. current limiter.

JAN 71. Split fones for dxing, Heath Ten-er mods, cw duty cycle, repeater zero-beater, HEP IC projects, 10-15-20M parabolic ideas, lightning protection, IC rx accessory, attic ants, double-balanced mixers, permanent marker tool, ham license study questions.

FEB 71. Metal locator, varactor theory, AFSK unit, SSTV patch box, ATV hints, RTTY tuning indicator, tone encoder/decoder, 220 MHz converter, SSTV magnetic deflection, IC code osc, 6M tx beeper, general class study (part 6), RTTY intro, perf-board terminal, low-ohmmeter.

MAR 71. IC audio filter, IC 6M converter, trap vertical ideas, digi counter info, surplus equipment identification, hf linear, simple fone patch, repeater audio mixer, digi RTTY accessories, coathanger gndplane, general class study (part 7).

APR 71. Intro to fm, noise blanker, repeater problems, Motorola HT mods, microwave repeater linking, digital ID unit, tuneable 2M fm rx/tx, repeater directory, fm marketplace, meter evaluator, varactor modulator, simple sig gen, touchtone hookup, hf preselector, 10M 12W tx.

MAY 71. 75M mobile whip, 2M preamp, transistor amp design, 10M dsb tx, portable fm transceiver directory, audio compressor-clipper, transistor LM freqmeter, 450 MHz link tx, simple af filter, 1-tube 2M transceiver, surplus 2M power amp, general class study (part 8)

JUNE 71. 2M beam experiments, 3 el 2M quad, multi-band dipole patterns, weather balloon vertical, pocket-pager squelch, two-er vfo, tuning mobile whips, transistor pwr supply, capacity decade box, 40M gain ant, general class study (part 9).

JULY 71. IC audio processor, audio sig gen, cw filter, 2M fm osc, 2M collinear vertical, FM supplier directory, Motorola G-strip conversion, transistor beta tester, general class study (part 10).

AUG 71. Ham facsimile (part 1), 500 Watt linear, dimensions for July collinear, 4-tube 80/40 station, vfo digi readout, Jupiter on 15M, general class study (part 11), pink ticket wave-meter.

SEPT 71. Transformerless power supplies, solid state tv camera, IC substitution, two rf wattmeters, IC compressor-agc, multichannel HT-200, ham facsimile (part 2), causes of manmade noise, vfo with tracking mixer, general class study (part 12), transistor heat-sinking, IC pulse gen, fone-patch isolation, hcd wattmeters.

OCT 71. Emergency repeater cor, transceiver power supply, predicting meteor showers, digi switching, reverse-current battery charger, passive repeaters, earth grounds, audio "tailoring" filters, Swan 350 mods.

NOV 71. 3-el 75M beam, motor-tuned gnd-plane, 2M gain vertical, transistor biasing, split-site repeater, fox-hunting, audio filter, transistor/diode tester, xtal tester, 6M kw amp, 10-15-20M quad, transistor pi-net final, ant feedline, communications dbs, 2300 MHz exciter.

AUG 72. SSTV intro, speech processor, fm repeater info, test probe construction, GE progline ac supply, 432 rf testing, preamp compressor, Six-er mods, fone patch, Two-er info, solar info, SCR regulator for HVPS, "ideal" xtal osc, fm rx adaptor, auto theft alarm.

SEPT 72. Plumbicon tv camera, WWVB 60 kHz rx, cigartube sig gen, cw active filter, rf testing at 1296-3500 GHz, balun ant feed, transistor power supply, IC 6M rx, IC fm/am detector (part 2), active filter design (part 3), K2OAW freq counter (part 3), 2M freq synthesizer (part 1).

OCT 72. Corrections for Aug. fm rx adaptor, 2M freq synthesizer (part 2), 6M transistor vfo, nano-ampere meter, time-freq measurement (part 1), active filter design (part 4), repeater timer, extra-class Q&A (part 3), balloon vertical, ID gen, time delay relay, 432 filter ideas, DC-AC inverter, hc-diode converter, rtl decade and nixie driver, plus-minus supply for ICs.

NOV 72. Hf transistor power amps, RTTY selcal, IC trf rx, transistor keyer, emergency power, 220 MHz preamp, double-delta ant, simple converter using modules, hf RF tester, "lumped line" osc, 2M freq synthesizer (part 3), K2OAW counter errata, 2M preamp, extra class Q&A (part 4), hi-Z voltmeter, Nikola Tesla story, vhf swr meter, transistor regen rx, 432 SSB transverter, AC arc welder, intro to computers, hybrid am modulator, HR10 rx mods, 10M transistor am tx, 40M gndplane, IC logic demonstrator, overload protection, if/rf sweep generator, digi freq counter, aural tx tuning.

DEC 72. SSTV scope analyzer, 2M fm rx, tone burst encoder and decoder, universal if amp, autopatch hookup, LM380N info, voltage variable cap info, 2M 18 watt amp, SSB modulation monitor, xtal freq/activity meter, 10A var. dc supply, transmission line uses, radio astronomy, inductance meter, 75 to 20M transverter, LED info, 40M preamp, transistor vfo, 1972 index, 2M preamp.

JAN 73. HT-220 touchtone, 3-el 20M yagi, 50 MHz freq counter, speech processor, 2-tone gen, fm test set, tilt-over tower, 6M converter using modules, tuneable af filter, six band linear, 10M IF tuner, diode noise limiter, cw/ssb agc, HW22a transceiver 40M mod, HAL ID-1 mod.

FEB 73. CW id gen, tone operated relay, toroidal quadrature ant, active filter, time freq measurement (part 2), repeater timing control, SSTV circuits (part 1), 2M converter using modules, multifunction metering, FET biasing, freq counter preamp, TR22 hi-power mod, transistor rf power amps (part 1), light bulb rf power indicators, 75A4 filters, capacitance measurement, Gonset 201 mod, world time info.

APR 73. FM deviation meter, 2M FET preamp, two 2M power amps, repeater control (part 1), repeater licensing, European 2M fm, fm scanner adaptor, RCA CMU15 mods, lightning detector, cb alignment gadget, transistor rf power amps (part 2), repeater economics.

JUNE 73. 220 MHz sig gen, uhf power meter, repeater licensing info, RTTY autoswitch, 40M hybrid vfo tx, ant polar mount, 10-15-20M quad, K2OAW counter mods, double coax ant, ham summer job, tone decoder, field strength meter, nicad battery pack, ohm meter, FCC regs (part 1).

AUG 73. Log-periodics (part 1), tone burst gen, rf power amp design, transistor radio intercom, 160M ant, SSTV monitor, low cost freq counter, VOM design, qrp 40M tx, 432 MHz exciter, fm audio processing, FCC regs (part 3).

SEPT 73. Repeater control system, log-periodics (part 2), 2M rx calibrator, PLL ic applications, TT pad hookup, Heath HW7 "s" meter, Oscar-6 doppler, 2M coaxial ant, 2M converter, IC keyer, measure ant Z, FCC regs (part 4).

OCT 73. GE Pocketmate mods, microwave freq measurement, CA3102E 2M frontend, 2 kw hf linear, rf wattmeter, meter repair, 60/40 dipole, IC "hi" gen, vhf freq multiplier, FCC regs (part 5).

NOV 73. 450 MHz exciter, intro to ATV circuits, nicad voltage monitor, autopatch connections, IC meter amplifier, TR22 ac supply indoor vertical, IC af filter, momentary powe failure protection, 160M ant acoupler, Motorola HT info, SSTV-ISB, Class-B af amp, FC(regs (part 6).

DEC 73. Code speed display, 2M kw amp, I(keyer, 8038 waveform gen, helical resonato design, sensitive rf voltmeter, proximity contro switch, IC tester, sequential tone decoder, 2I portable beam, electronic calculator math, c filter design, FCC regs (part 7).

FEB 74. SSTV monitor info, IC audio amp scope sweep gen, 15/20M vertical, telephon line control system, pc board constructio var-Q af filter, blown-fuse indicator, 40m c stn with Ten-Tec modules, simple preamı compressor, single-IC rx, "432-er" final assen bly, transistor keying circuit, 7-segment readou with nixie driver.

APR 74. Vox for repeaters, tone-operat relay, hf transverter, 10-to-2m tx converte remote control panel for scanner, RCA fm tuning, subaudible tone gen, FCC regs (part 5 Repeater Atlas.

MAY 74. Cd car ignition, audio compress info, interference suppression for boats, au burglar alarms, 2m ic preamp, 10m fet co verter.

JULY 74. 4-1000A linear, universal freq g universal afsk gen, 555 IC timer, 80M phas array, 135 kHz-432 MHz preamps, 10M qrp tx, 3000 vdc supply, how to read diagrams.

AUG 74. Toroidal directional wattmeters, 4 MHz FET preamp, use gdo to find " Trimline tt pad hookup, R390 & R392 mods, tracking cw filter, aural voltmeter, versal regulated supply, sstv scan converter, logic problems, ID timer.

SEPT 74. MOSKEY electronic keyer (part ex warning system, Heath 10-103 scope mc qrp 6M am tx, rf speech clipper, audio n limiter, wx satellite on SSTV monitor, unive IC tester, miniature rig construction, to construction, infinite rf attenuator, electr

(Mor

Since there's little to get stale in back issues of 73 (our magazine is not padded . . . like others . . . with reams of activity reports), you'll have a fantastic time reading them. Most of the articles are still exciting to read . . . and old editorials are even more fun for most of the dire predictions by Green have now come to pass. Incentive licensing was every bit the debacle he predicted . . . and more. You'll really get a kick out of the back issues.

photo flash ideas, IC "select o ject."

OCT 74. Microtransistor circuits, synthesized HT 220 (part 1), repeater government, regulated 5 vdc supply, fm selcal, removeable mobile ants, Motorola metering, 2M vertical collinear, Motorola model code, 2M coaxial dipole, 1.6 MHz if strip, MOSKEY electronic keyer (part 2), carbon mike circuit, hi power lo pass filter, 6M preamp, 3 wire dipole, ATV sync gen, NCX 5 mods, mobile whip for apartment dwellers, sstv auto vertical trig.

NOV 74. K2OAW counter update, regulated 5 vdc supply, wind direction indicator, synthesized HT 220 (part 2), 20M 3-el beam, auto patch pad hookups, double-stub ant match, novice class instruction, digi swr meter (part 1), 6M converter (1.6 MHz if), "C-bridge," MOSKEY electronic keyer (part 3), Aug. sstv scan converter errata, repeater off freq indicator.

DEC 74. Care of nicads, wind speed/direction indicator, wx satellite video converter, electronic keyer, hints for novices, unknown meter scales, SSTV tape ideas, TTL logic probe, public service band converter, tuned-diode test receivers, digi swr meter (part 2), telephone pole beam support, rhombic antennas, 1974 Index.

FEB 75. Heath HO 10 scope mod for SSTV, electronic keyer, digital satellite orbital timer, Oscar 7 operation, satellite orbital prediction, Heath SB-102 mods, comparing FM & AM, repeater engineering, Robot 80-A sstv camera mod, neutralizing Heath SB 110A, "Bounceless" IC switch, tape keyer for cw tx.

APR 75. $50 walky for 2M, 2M scanning synthesizer, 88 mH toroid info, 8-function repeater controller, nicad battery precautions, TR22C preamp, telephone attachment regs, Guide to 2M Hand-held Transceivers, 2M 7-el beam, basic telephone systems (part 1), 10 min ID timer, modified hf Hustler mobile ant for 2M, 15M quad modified for 20M, 2M collinear beam, R 11A surplus rx conversion, 5/16-wave 2M ant, Hallicrafters SX-111 rx mods, 160M cw tx.

AUG 75. 146/432 MHz Helical ants (part 2), 10 min ID timer, digi swr computer (part 1), debugging rf feedback, DVM byer's guide, wx satellite monitor, cmos "accu-keyer," pc board method, sweep tube final precautions, compact multiband dipoles, small digital clock, accessory vfo for hf transceiver, modern non-Morse codes, multi function gen, 2M scanning synthesizer errata, KP-202 walky charger, 10M multi element beam.

SEPT 75. Calculating freq counter, wx satellite FAX system (part 1), IC millivoltmeter, three button TT decoder, troubleshooting sstv pix, 40M dx ants, 146/432 MHz helical ants (conclusion), digi swr computer (conclusion), reed relay for cw bk in, NE555 preset timer, power failure alarm, portable qrp rig power unit, precision 10 vdc reference standard, 135 kHz if strip, telephone handsets with fm transceivers, Motorola T 44 tx mod for ATV, 0-60 MHz synthesizer (part 10, ham radio PR)

BACK ISSUES

73 MAGAZINE CLASSICS

issues containing hundreds of articles & projects

GREAT FOR NOSTALGIA BUFFS

SEND TO 73 BACK ISSUES – PETERBOROUGH, N.H. 03458 — 11-76

☐ JUNE 63	☐ JAN 70	☐ JAN 73
☐ AUG 63	☐ FEB 70	☐ FEB 73
☐ OCT 63	☐ MAR 70	☐ APR 73
☐ FEB 64	☐ APR 70	☐ JUNE 73
☐ MAY 67	☐ MAY 70	☐ AUG 73
☐ JULY 67	☐ JUNE 70	☐ SEPT 73
☐ OCT 67	☐ DEC 70	☐ OCT 73
☐ JUNE 68	☐ JAN 71	☐ NOV 73
☐ JULY 68	☐ FEB 71	☐ DEC 73
☐ SEPT 68	☐ MAR 71	☐ FEB 74
☐ NOV 68	☐ APR 71	☐ APR 74
☐ JAN 69	☐ MAY 71	☐ MAY 74
☐ FEB 69	☐ JUNE 71	☐ JULY 74
☐ MAR 69	☐ JULY 71	☐ AUG 74
☐ APR 69	☐ AUG 71	☐ SEPT 74
☐ MAY 69	☐ SEPT 71	☐ OCT 74
☐ JUNE 69	☐ OCT 71	☐ NOV 74
☐ JULY 69	☐ NOV 71	☐ DEC 74
☐ AUG 69	☐ AUG 72	☐ FEB 75
☐ SEPT 69	☐ SEPT 72	☐ APR 75
☐ OCT 69	☐ OCT 72	☐ AUG 75
☐ NOV 69	☐ NOV 72	☐ SEPT 75
☐ DEC 69	☐ DEC 72	

☐ $1 – single issues (indicate your choice at left)
______ issues @ $1
☐ $12 – ten issues (indicate your choice at left)
☐ $20 – 25 issues (indicate your choice at left)
☐ $10 – 25 issues, our choice ☐ 60-65 ☐ 66-70 ☐ 71-75
☐ Cash, check, money order enclosed.

Name ______________________ Call ______________

Address ______________________________________

City ______________________ State ________ Zip ________

Charge: ☐ BankAmericard # ______________________

☐ Master Charge # ______________________

Master Charge Interbank # ______________ Expiration date ________

Date ______________ Signature ______________________

LETTERS

from page 57

corder, and digital call counter. It's a beauty!

I built the identifier from the Robert Glaser article in last April's issue ("A Reprogrammable ID"), and it works like a charm. I made some changes in the timer and I am using only two buttons to do the programming.

Another two projects I built from the April issue are the "5 Dollar 100 Watt Amplifier," a nice 2 meter antenna, and the "Mighty TR-22/15" little amplifier, which is now the afterburner of my VHF Engineering rig base station.

Now I am putting together "MINI-MOS — The Best Keyer Yet?" by WA6EGY, on page 38 of the August issue.

There is no doubt that *73* is the leading magazine in the business.

Congratulations, again, and keep the good work and the stream of good stories coming.

Albert H. Coya WB4SNC
Miami FL

BUG VII

An error was spotted in my "Fun Counter" article (July issue). The leads on IC3, pins 5 and 6, should go to pins 6 and 7 respectively in Fig. 6(a).

A. E. Plavcan
Anaheim CA

CURRENT?

First, keep up the logic and computer articles. I'm a computer freak and really enjoy them. The people who complain about computer articles are like the League people who fought transistor articles in *QST*. You can't stop progress. It's only up to you whether you stay current or not.

Dick Murphy WA1SPI
Marlboro MA

GOOD STUFF

As soon as I received the July issue, and read Bob Way WA9VGS's article on the Keycoder I, I said I had to have one. So, I collected the parts and got to work. Since Bob had not specified the precise Amidon part number, I fired off a message to him about it. Got my answer and got it built. And that is one of the things I really like about your magazine — the articles are reasonable things to build without a machine shop or microwave lab, are useful or interesting gadgets, use parts that can be found, and, based upon my huge sample of one, work. The Keycoder is the very first thing I have ever built from a magazine, so maybe you can imagine my joy in getting it to work properly and well.

Now that you have my money to extend my subscription for three years, please keep the good stuff coming.

Ralph Jay Frisbie WB6GNS
Camarillo CA

ENDBUG

Just a note to call your attention to a mistake in the parts list of the "12 Inexpensive Volts" article on page 60 of the September, 1976, *73*. In regard to T1, the list calls for a 2731510 12 V 3 A transformer. This particular Radio Shack number, however, is for a 6.3 V 3 A transformer. The correct part number is 273-1511.

Doug McArtin WA2AUJ
Yonkers NY

GEORGE

On June 9, youthful thieves entered the locked car of George Keys WA6KAA, which was parked overnight in the driveway of his home. They snatched a two meter rig that George had purchased only two weeks earlier.

George took action.

The Santa Maria *Times* of June 12 carried an ad offering to exchange a Johnson CB rig for the stolen 2 meter rig — with no questions asked. That evening a telephone call cinched the trade. The next morning George had his HA 146 returned and the two young men left with the Johnson CB rig.

George had their description.

It was circulated to members of the Satellite club. One member related the description to an incriminating conversation someone he knew had overheard. It was sufficient for Sheriff's deputies to make the two arrests, breaking up a CB theft ring and recovering a number of stolen CB rigs in the process.

Lee J. Delworth WB6RDW
Lompoc CA

propagation

by
J. H. Nelson

EASTERN UNITED STATES TO:

GMT:	00	02	04	06	08	10	12	14	16	18	20	22
ALASKA	7A	7	7	3	3	3	3	3A	7	14	14	14
ARGENTINA	7A	7	7	7	7	7	14	14	14A	14A	14	14
AUSTRALIA	14	7B	7B	7B	7	7	7	14	14	14	14	14A
CANAL ZONE	7A	7	7	7	7	7	14	14	21	21	14	14
ENGLAND	7	7	7	3	7	7	14	14A	14A	14	7B	7
HAWAII	14	7B	7	7	7	7	7	3A	7	14A	14A	14
INDIA	7	7	7B	7B	7B	7B	14B	14	7B	7B	7	7
JAPAN	14B	7B	7B	3B	3	3	3	3B	7	7B	7B	14
MEXICO	14	7	7	7	7	3A	7	14	14	14A	14	14
PHILIPPINES	14B	7B	7B	7B	7B	7	7	7	7	7B	7B	7A
PUERTO RICO	7	7	7	7	7	3	14	14	14	14	14	14
SOUTH AFRICA	7	7	7	7	7B	7A	14	14A	14A	14A	14	14
U. S. S. R.	7	7	3	3	7	7B	14	14	14	7B	7	7
WEST COAST	14	7	7	7	7	7	7	14	14	14A	14A	14

CENTRAL UNITED STATES TO:

GMT:	00	02	04	06	08	10	12	14	16	18	20	22
ALASKA	14	7A	7	3	3	3	3	3	7	14	14	14
ARGENTINA	14	7A	7	7	7	7	7A	14	14A	14A	14	14
AUSTRALIA	14A	14	7B	7B	7	7	7	7	14	14	14	14A
CANAL ZONE	14	7	7	7	7	7	7	14	21	21	14	14
ENGLAND	7	7	7	3	7	7	7B	14	14	14	7B	7
HAWAII	14	14	7	7	7	7	7	3A	7	14A	14A	14
INDIA	7	7	7B	3B	7B	7B	3B	7A	7A	7B	7B	7B
JAPAN	14	7B	7B	3B	3	3	3	7	7	7	7B	14
MEXICO	14	7	7	7	7	3	3	7A	14A	14	14	14
PHILIPPINES	14	14B	7B	3B	3B	7	3	7	7	7	7B	14
PUERTO RICO	4	7	7	7	7	3A	7A	14	14A	14	14	14
SOUTH AFRICA	7A	7	7	7	7B	7B	7A	14A	14A	14	14	14
U. S. S. R.	7	7	3	3	7	7	7B	14	14	7B	7B	7

WESTERN UNITED STATES TO:

GMT:	00	02	04	06	08	10	12	14	16	18	20	22
ALASKA	14	7A	7	3	3	3	3	3	7	14	14	14
ARGENTINA	14	14	7	7	7	7	7	14	14	14A	14A	14
AUSTRALIA	14A	14A	14	7B	7	7	7	7	14	14	14	14
CANAL ZONE	14	7A	7	7	7	7	7	14	21	21	14	14
ENGLAND	7	7	7	3	7	7	3B	7B	14	14	7B	7B
HAWAII	21	14	7A	7	7	7	7	3	7A	14	14A	14A
INDIA	7	14	7B	3B	3B	7B	3B	3A	7	7	7	7B
JAPAN	14A	14	7B	7	3	3	3A	3	7	7	7B	14
MEXICO	14	7A	7	7	7	7	7	7A	14A	14	14	14
PHILIPPINES	14A	14	7B	7B	7B	7	7	3	7	7	7B	14
PUERTO RICO	14	7	7	7	7	7	7	14	14	14A	14	14
SOUTH AFRICA	14	7	7	7	7B	7B	7B	14B	14A	14A	14	14
U. S. S. R.	7	7	3	3	3	3	3	7A	7A	7B	7B	7B
EAST COAST	14	7	7	7	7	7	7	14	14	14A	14A	14

A = Next higher frequency also may be useful
B = Difficult circuit this period
N = Normal
U = Unsettled
D = Disturbed

1976			NOVEMBER			1976
SUN	MON	TUE	WED	THU	FRI	SAT
	1 U	2 D	3 D	4 U	5 U	6 U
7 D	8 U	9 U	10 N	11 N	12 N	13 U
14 D	15 U	16 N	17 N	18 N	19 N	20 N
21 N	22 N	23 N	24 N	25 U	26 U	27 U
28 N	29 N	30 N				

73 AMATEUR RADIO

DECEMBER 1976
$1.50

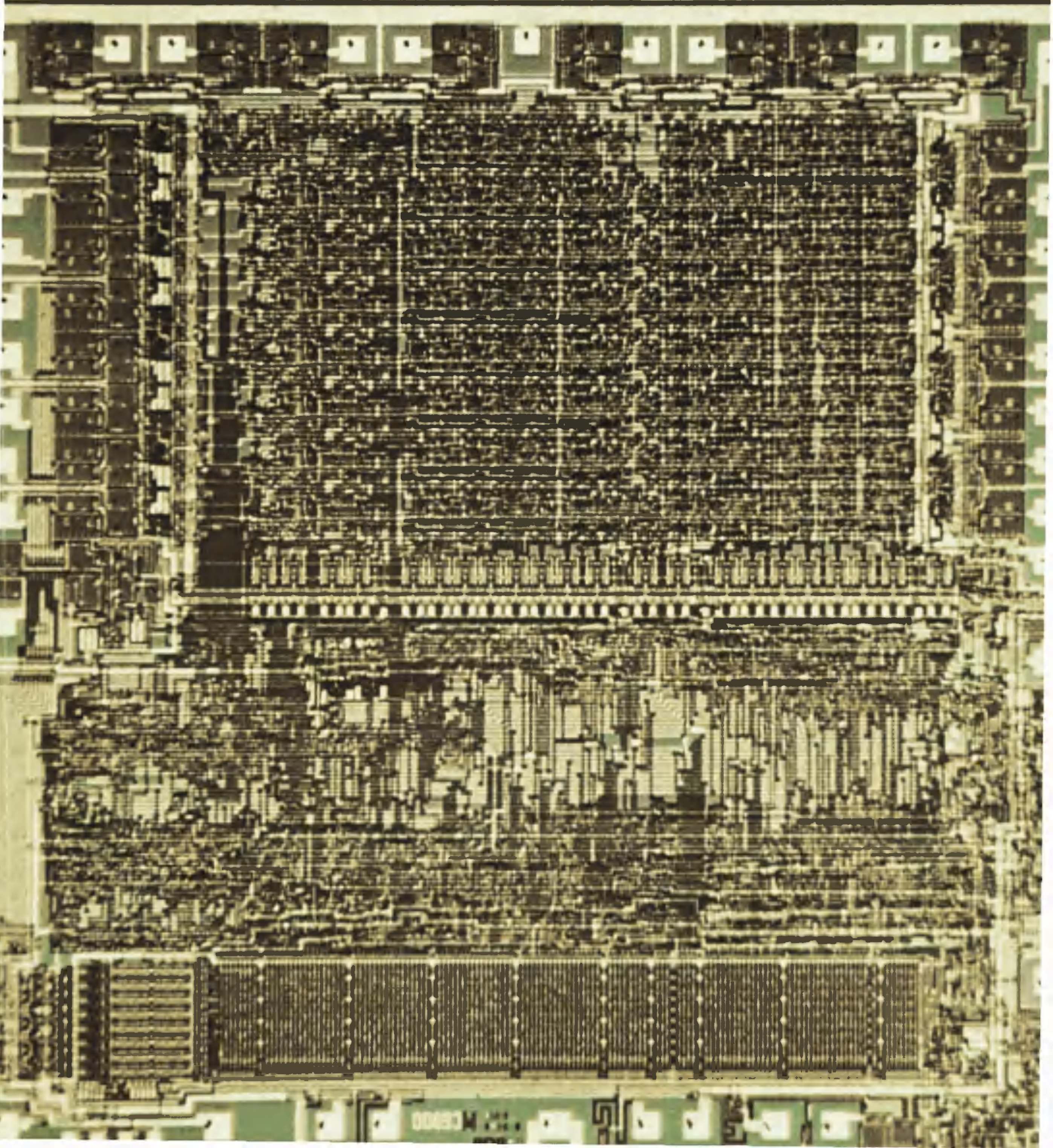

73

#194 DEC 1976

COVER: The Motorola 6800.

73 Magazine is published monthly by 73, Inc., Peterborough NH 03458. Subscription rates in the U.S. and Canada are $10 for one year and $20 for three years. Outside the U.S. and Canada, add $2. Second class postage paid at Peterborough NH 03458 and at additional mailing offices. Phone: 603-924-3873. Microfilm edition — University Microfilms, Ann Arbor MI 48106. Tapes — Science for the Blind, 332 Rock Hill Rd, Bala Cynwyd PA 19904. *INCLUDE OLD ADDRESS AND ZIP CODE WITH ADDRESS CHANGE NOTIFICATION.*

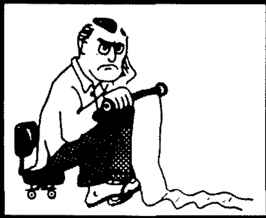

NEVER SAY DIE

...de W2NSD/1

EDITORIAL BY WAYNE GREEN

73 SUFFERING?

Is *73* really dropping circulation, as ARRL recently reported in *HR Reports*? The fact is that *73*'s growth this year has been without precedent . . . and both *HR* and *QST* know it. They are hearing this from readers, authors, dealers (who tell them that *73* is outselling their magazines in the radio stores), from newsstand wholesalers (who say the same thing) and, worst of all, from the advertisers.

The growth has been a pain . . . but a most bearable one. We've just had to double the capacity of our computer system . . . and it was supposed to hold us for a couple more years. We've had to do second printings of the April, September and possibly October issues because incoming subscriptions have been so far beyond our projections . . . and that is horribly expensive. The staff has gone from 30 last year to 45 this year to handle subscriptions, mailing lists, promotions, artwork, writing, editing, printing . . . etc.

Despite the rash of I/O articles in *73* this year, the subscriptions have been growing faster than ever before in our history (hey, did you see the microcomputer article in *QST* for August!). The *73* formula of lots of articles, few contest results, few activity reports, few PhD type of technical articles and tell it like it really is approach, which is more in vogue after Watergate, seems to work. Few but older hams seem to be buying the blind loyalty bit these days . . . most want to see signs of responsiveness and relevancy.

Let's add up the pages of ads in the ham magazines for the last half of 1975 and the first half of 1976 for a direct comparison. Keep in mind that ads in *QST* cost about 10% more than those in *73*.

73	971 pages
QST	735 pages
HR	624 pages
CQ	306 pages

Perhaps the chart above will put things into perspective. It shows *73* with 32% more ads than *QST* (and a lot fatter magazine . . . without all the contest results, SCM reports, and that stuff). After over 50 years as number one, this is a very bitter pill to swallow, and it is no wonder that there is some nervousness in Newington. Figures lie and liars figure, to coin a phrase.

TECHS'LL PROBABLY HATE ME

Not a few people have petitioned the FCC to open part or all of ten meters for Techs. It is a matter of religious significance to some Techs.

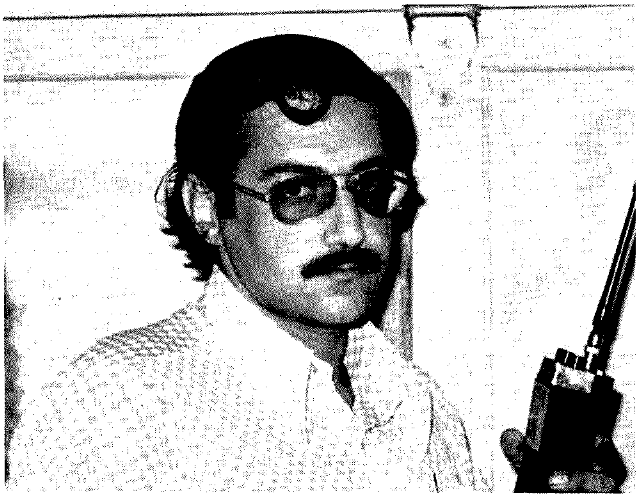

Since hamfests, conventions and computerfests are commercial affairs, 2m HTs should not *be used for coordination. Here's one of the officials of PC-76 in the middle of a no-no. This sort of thing would be okay using CB, but not ham radio.*

At the present time I am neither for nor against the idea. However, I would like to see someone come up with a good reasonable argument which would convince me that it was a valid idea.

Yes, I think I know all of the arguments . . . but I may have missed some. Ten needs activity . . . no question about it. But blessed if anyone has come up with any data which indicates even remotely that Techs will use ten meters if we open it for them. All that data I've seen so far points the other way.

Six was the biggy a few years back . . . right? You could find about 90% of the active Techs chewing away on six . . . maybe 95%. Then some chap (prizes if you know who) started really pushing two meter FM and repeaters and got things perking up there. Instant flushing of six . . . which turned into a ghost band. Now 95% of the active Techs were on two meters, with a thin scattering on six, 450 . . . and even a half dozen or so on 220 MHz.

From that, one might be tempted to suspect that Techs (like all other classes of hams) tend to go where the action is. OK . . . so what about ten meters? Well, with over 200,000 licensed amateurs with tickets which do permit them to operate on ten . . . and with a mere handful doing same, why on earth should we expect Techs to suddenly reverse their practice of ignoring inactive bands? When you have a good explanation for that, let me know and you'll find a heavy hand pushing for Techs on ten.

If Techs are so great at helping keep bands busy, where are they on 220 MHz? Where are they on six meters? You know where they are . . . they are on two meters. And I don't want to hear from the tiny band of pioneering Techs who are out there trying to shovel coal up the chute (to coin a phrase), fighting a tough battle to keep *something* going on bands other than two. Fair is fair, fellows.

WARC — WHAT YOU CAN DO

Okay, so most of us are worried about what might happen at the next ITU conference in 1979. Again there is every reason to worry, particularly if you have any real knowledge of where amateur radio stands with other countries.

As I mentioned in my October editorial, the only chance that I see

Continued on page 176

BE MY GUEST

visiting views from around the globe

Little...

Every day records are falling. Divers are setting new underwater poker playing records. Jets are crossing the Atlantic at supersonic speed. A group of Nashua, New Hampshire folks recently set the world's record for rocking chair rocking. And out in a small midwestern town this summer, a five year old boy has earned a Novice class amateur radio license. It boggles the mind.

Neil "Rusty" Rapp WN9VPG of Vincennes, Indiana will only start first grade this fall. At age four the boy's reading ability was estimated to be at the fifth grade level. His Novice code test features inch high letters, and a better score (103) than his father. Rusty learned the code in only seven weeks and passed his theory exam in about half an hour. Already he's bored with the Novice bands, and is studying hard for his General.

As near as we can tell, the old world's record for youngest ham was Gary Lewis WN7BBJ. Lewis was seven when he got his license, but the *Callbook* says he's no longer licensed, or has another call. A fellow in Washington now holds N7BBJ.

Rusty began on the CB bands, after his dad, now a Novice, bought a CB radio. Rusty caught on fast, memorizing handles and callsigns and becoming a local legend on channel 13. He used the handle "Little Shadow."

At Christmas time, the elder Rapp dusted off a code key and oscillator and decided to get into ham radio. Father and son had been practicing for several weeks when they spotted an ad in the local paper: The Old Post Office Amateur Radio Society was offering Novice classes, the minimum age requirement being 10.

The first night, Del Rapp left his son home, afraid of the age limit. But there was a ten year old girl enrolled, so the next week it was Rusty's chance. Three weeks later, father passed the code test, but Rusty failed. He'd been told not to turn over his paper . . . but since the boy wrote in such big letters, he'd run out of paper and couldn't copy enough characters.

Rusty, according to his mother,

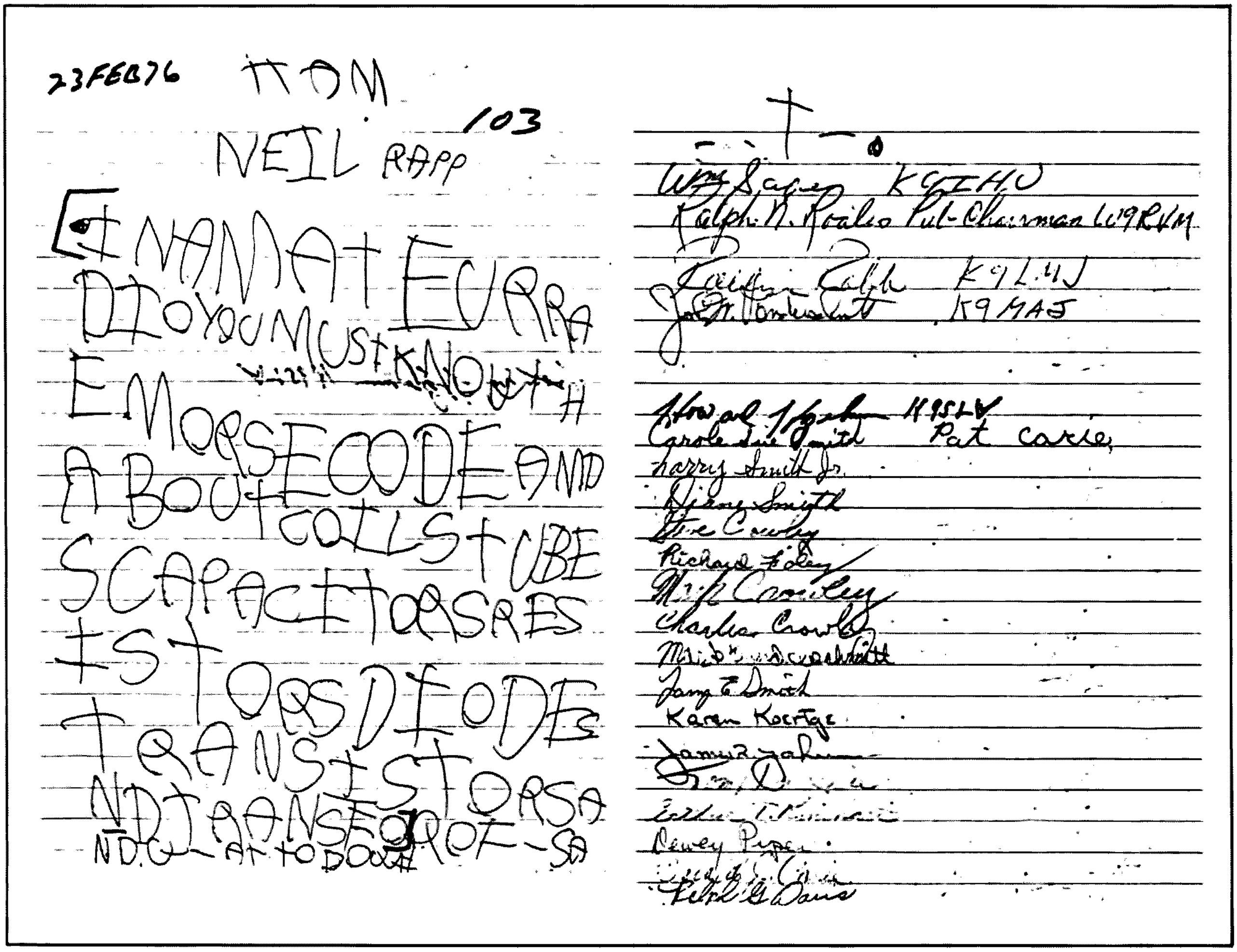

Photo by Paul Willis

cried until midnight . . . and there were doubts whether he ought to continue. Two weeks later, the code hurdle was eliminated, thanks to the watchful eyes and ears of Bill Sage K9IHU, the club code instructor.

Then it was onto theory and it was tough going. Rusty's mom decided to come up with a game, so the boy could memorize the questions and answers "backwards and forwards." They put the questions on one set of cards and the answers on another. Father and son then questioned each other with gusto, using pennies and then peanuts to reward correct answers.

The Rapps must have gone through a lot of peanuts, because it turned out the FCC lost Rusty's application. More than three months after the code test, it was finally time for theory.

It must have been quite a sight, a five year old boy poring over the exam questions . . . filling out the computer answer form. How many of us have been there, with years of schooling and hours of study, only to fail and have to try another day. Theory instructor Howard Hazelman K9SLV probably still doesn't believe it. When Rusty passed his code test, the entire class signed his exam paper . . . because the instructor feared no one would believe a five year old boy could pass.

You can imagine the look on K3DIF's face when he gave WN9VPG his first QSO on 15 meters. It turned out K3DIF worked for Associated Press in Washington, DC, and the story of the world's youngest ham was on its way into print. A half dozen radio and newspaper stories followed. Rusty even heard from First Mama Betty Ford, who replied with a big 10-4 and a form letter signed, "Nice modulating with you!" (The White House is apparently short of ham radio form letters.)

One thing's sure: Rusty Rapp's achievement should be an inspiration to all of us, whether we be Novices seeking General class licenses, CBers trying to get into hamming, or Advanced licensees struggling to get the code speed up to 20 for the Extra. There is something to that ancient saying, "And a little child shall lead them . . ." Meanwhile, I'm firing up on 21.120 MHz this Sunday for the Old Post Novice Net, at midnight GMT, hoping to reach that five year old Novice and taste a bit of the world's youngest fist.

. . . News

A recent report to the Office of Telecommunications Policy, Executive Office of the President, warns of the potential for breakdown of the federal regulatory system in the face of rapidly developing telecommunications technology. Prepared by Arthur D. Little, Inc., the report foresees the headlong growth of Citizens Band radio resulting in new criminal techniques and the Postal Service threatened with obsolescence. Even AT&T's gaining a monopoly of all broadband distribution to the home is among other possible impacts of technological change.

Martin Ernst, director of the study, says the report is not a prediction, but a warning of the kinds of chaos that could result if the status quo is maintained. "It's not a matter of more regulations," he stated, "but of how telecommunications should be regulated. Much of the technological change we assessed is already well on its way. It can't easily be turned back. The regulatory framework has to be rethought to deal with the possible social impacts," he explained. "Overregulation certainly is not the answer. In fact, sections of our study focus on the dangers of too much regulation, especially if it cannot in practice be enforced."

Commissioned by the Office of Telecommunications Policy as the first step in the process of planning for the impacts of telecommunications change, the report consists of five scenarios. They develop possible, though not necessarily likely, chains of events in such fields as mail delivery, CB usage, broadcast distribution, broadband communications, and education. The scenarios were developed to dramatize a broad range of possible impacts on individuals, society as a whole, and the economy.

Pervasiveness of Telecommunications

The visible forms of telecommunications (telephones, television, radio) give few clues to its pervasiveness. The invisible nature of its more critical aspects (electronic networks, communications satellites, cable systems, and other operations which make these things possible) has led to its casual acceptance, according to the report. "Most users are unaware, for example, of the technical, economic, and political considerations that determined specifications for equipment such as television sets before they could be marketed or what alternative performance possibilities were and are available. Not only the costs and quality of equipment, but even personal safety and national security can be determined by remote decisions that are difficult for all but the most experienced and well informed to comprehend fully," the report states. Similarly, few of the recipients of electronically transmitted Social Security payments, Citizens Band radio enthusiasts, or cable TV customers are aware of the mechanisms involved and the potential for sweeping change represented therein.

With the possible exception of transportation, the report points out that telecommunications has no rival in the degree to which it is a part of American life. Repercussions of seemingly isolated and relatively unimportant decisions regarding a single aspect of it can affect a broad range of human activities. For example, a CB radio frequency band decision to open more channels would affect imports and thus, among other effects, change the balance of payments. It also could affect treaties with other nations, notably Canada.

The meteoric growth of Citizens Band radio already has overcrowded

the channels available to it. This could affect international relations because the use of present frequencies during periods of high sunspot activity, such as that anticipated in 1979, could interfere with radio operations in other countries where amateur radio is more rigidly controlled. In that context, the study notes, no other nation has permitted access to a Citizens Band because of the many and difficult problems such access creates.

Outcome of CB Radio Boom

The study team developed a scenario of possible events arising from the proliferating use of CB radios. The team believes that hoards of new users and additional uses could in the not too distant future turn the present situation into sheer chaos unless a workable policy is developed. Present policy is the responsibility of the FCC, which has neither the resources nor mandate for enforcement. One typical issue is freedom of speech as affected by FCC controls. CB is already used in organized demonstrations; this raises the question of the legality of police use of jamming to maintain law and order in riot situations. Privacy and the use of scramblers versus monitoring for illicit use is another example. At least eight federal government agencies (FCC, OTP, Commerce, State, Justice, Coast Guard, Defense, Interior) and local governments will have to contend with the potential impact of CB.

USPS Headed for Obsolescence?

Already beleaguered, the United States Postal Service (USPS) is perceived by the report as one of the more vulnerable organizations in the path of the telecommunications onslaught. Despite the vital function it has performed for society for two centuries, the USPS has limited freedom with which to combat the encroachments which have begun. Electronic funds transfer techniques already in use can significantly substitute for the 35 percent of all mail (two thirds of first class) accounted for by financial transactions (orders, invoices, bills and payments). Because Postal Service operating costs reflect the number of deliveries which need to be made, not the volume carried, the loss will disproportionately affect USPS revenues.

A second threat lies in the growth of digital data and facsimile networks which might ultimately be used for a large portion of intra- and inter-business messages. With advancements like these making mail service obsolete for many business purposes, massive subsidization might be required to maintain national mail service for individuals. This could result in very much steeper postal rates (approaching 35¢ an ounce for first class mail in the mid 1980s), the need to pick up mail from central drops, or else pay for deliveries.

The USPS can respond with its own electronic transmission to move mail from one location to another. However, the most profitable portion is what is handled by telecommunications companies which can avoid the expensive physical delivery process. Unless the USPS is prepared and permitted to compete directly with private industry, it must build its business out of the least economically desirable markets.

Television Struggle

A third scenario deals with the possible outcome of an attenuated struggle between "free" broadcast television and cable and pay television. The potential for competitive advantage afforded by the use of satellites might ultimately lead to the elimination of local TV broadcast stations. Alternatively, current research into the use of optic fibers could lead to telephone companies becoming the most logical providers of home television access in the long term. Regulatory policy will continue to be a key factor in alternative developments and any subsequent change in the television industry's infrastructure. The FCC and other regulatory agencies now face increasing conflict as technology offers new opportunities that favor first one telecommunications industry sector and then another.

Another scenario explores the possibility of two-way broadband communications being extended to cover individual households, permitting access from homes to libraries, data bases, education, entertainment, computers, and other facilities. A fifth scenario investigates the interface between public services and private enterprise in the provision of telecommunications services for health, education, and government communication needs.

Arthur D. Little, Inc.
Cambridge MA

The Persuader

A Boston psychiatrist says CB radio's effect on personality may be too new a phenomenon to draw any accurate conclusions. Dr. Mark Walter of the McLean Hospital in Belmont says it's a matter of people feeling the power and anonymity of the microphone.

Walter told the *Boston Globe*, "It's really a new variation of an old thing . . . we do know that ham radio operators are often the sort of people who enjoy being in a room alone with the power of talking out to the world. They want to reach out and be in touch with people but keep an emotional distance from the same people."

FCC regional director Gerard Sarno goes a step further. Sarno characterizes the average CBer as a "nitwit" who becomes "obsessed with the feeling that they have no other purpose in life other than to transmit on a CB radio. It gives them a source of identity they never had before. And suddenly, if they're criticized by someone else, watch out for them."

Both men were commenting on a recent shooting incident in Boston. Newspaper accounts reported that two friends were chatting over CB when a third person broke in with some flack. "You come over here and say that face to face," one of the friends shot back, adding that he lived at an address in the Back Bay section.

A short time later, in the wee hours, a car showed up outside the Back Bay address. A man jumped out, yelling; "Here I am. Now what are you going to do about it?"

A 44 year old businessman ran out into the street to answer the challenger. Brandishing a .38 caliber revolver, he smashed one of the car windows . . . and pumped a slug into the CB set under the dash, demolishing it. "There, that'll teach you," he shouted back, as he ran into his house.

Carnival Time

The combined effort of amateur radio operators in two states, the Red Cross, and others, has resulted in the return of a missing boy to his worried mother.

Mrs. Judy Lever, Mt. Holly, Vt., had high praise for the amateur radio operators, who located her son, Mark, 13, when others had not been able to find him.

Amateur radio operators in Vermont, including Fern Adams W1YYU, North Clarendon, William Dimick WA1OHB, Rutland, and Mildred Doe K1BQB, Bellows Falls, notified New Hampshire operators that the boy was missing and possibly traveling with an amusement company in New Hampshire or Maine.

"I have a friend who is a ham operator," Mrs. Lever said. "Her set was not working, but she contacted friends, who immediately contacted others, among them Mr. Prescott (J. Longdon Prescott, amateur radio operator and disaster chairman for the Kearsarge Chapter, American Red Cross, in Franklin). We told them we were looking for a carnival, and within two hours they had located the company and my son. I am very grateful to them for the fine job they did."

Amateur activities were coordinated by Edwin Antz of Danbury, net manager of the Granite State Amateur Radio Network, and the WR1ABU repeater, located in Concord.

The particular company Mark was traveling with was difficult to trace, as they moved often. The help of Mrs. Linda Hebert, Carver Street, West Franklin, and amusement publications, determined that the boy was with an amusement company in Calais, Maine.

The Red Cross and company officials made arrangements to transport Mark back to Mt. Holly, but a misunderstanding about time resulted in Mark taking a bus home on Monday.

Mrs. Lever was happy to have her boy back home, and Mrs. Hebert has been commended by the Red Cross for her efforts in locating the missing boy.

Reprinted from the Manchester *(N.H.)* Union Leader, *July 21, 1976.*

Report from Boston

The Federation of Eastern Massachusetts Amateur Radio Associations has been putting on conventions for years now. There have been those bigger than this year's version, held at the downtown Boston Statler Hilton. Most of the biggies had come to the now departed New Ocean House in Swampscott, but that was before the CB explosion.

Not that the CB influence hurt attendance much. A lot of CBers turned out, just to see why all those folks were breaking channel 19 to find the hotel. Convention officials said they had a record day Sunday . . . but the exhibitors were another story. Less than fifty showed up, and five of those were computer oriented. Several manufacturers said they were using the same displays at CB conventions, by simply inserting new signs (to change that loaded whip exhibit from 27 to 144 MHz). The economics of the CB boom then became one of the unspoken exhibitors.

A highlight of the weekend was WR1ACO's long distance link with WR6ABM in the San Francisco Bay Area. The Malden association has done it before, with a July 4th spectacular that linked Boston with Hawaii and Philadelphia. But this time, instead of the club paying the bill, the cost (about $150) will be borne by a small group of Boston FMers. A high point (or low point, depending on how you look at it) was one poor fellow's query, aired on both coasts, whether it was just conditions or what? He even signed his calll Plans to broadcast remarks by ARRL President Harry Dannals W2TUK during the convention banquet had to be scrapped, because of problems on the West Coast side. But once the system was debugged, all went well. WR6ABM, incidentally, is microprocessor controlled.

Back at the convention . . . Heath was introducing its new synthesized 2m FM rig, the HW-2036. An earlier attempt, you'll remember, was recalled because of spur problems, although company engineers say the earlier model would have worked, if most hams had access to spectrum analyzers. Heath says the new version puts spurs (within 20 MHz of carrier frequency) down 70 dB. It's due before Christmas.

A close competitor will be the Icom IC-22S, a 22 channel synthesized 2m FM rig which features a diode matrix system for user setup of desired channels. The Icom was the talk of the convention, with dealers taking scores of orders and much speculation about the new model's impact on the 2m market. It looks like the 22S will become a modifier's delight, with several schemes already afoot to externally program the synthesizer through outside switching. Company officials say demand is so great that it could be months before the orders are filled. But they continue to deny that the IC-230 is about to follow the IC-22A into oblivion. Rumors nevertheless persist that Tempo's VHF 1 digital readout rig will soon have an Icom competitor.

On the HF side . . . Kenwood-Trio kept a constant crowd with their new TS-820, despite the fact not one dealer at the convention had any to sell. Kenwood officials noted increasing pressure for them to sell direct, a violation of longstanding company policy, and could only urge people to keep plugging at their local dealers. CushCraft introduced a new four element tri-band beam, model ATB-34. With an 18' boom and 30'8" maximum element length, it's bound to stir up the tri-band market. One real plus is CushCraft's plan to include a 1-1 balun as part of the deal. The first ones ought to be coming off the assembly line soon.

Hy-Gain has apparently applied some of its CB R&D money to the ham bands, with a new line of VHF-UHF mobile antennas. They use an etched copper loading coil on a PC board and even offer one that covers 6 and 2m. The idea first appeared with Hy-Gain CB antennas.

One of the biggest disappointments had to be the convention flea market. For two days some die-hards hung in there, but the downtown location took its toll, since the pickings were so poor. To say the least, Boston was no bargain for flea marketeers.

All that aside, it was a pretty good convention. All the elements (except the fleas) were there . . . and the Boston crew came through with their usual outstanding prize program (everything from a weather station kit to a TR-4C). One big change was the mounting influence of microprocessor hamming. The seminar schedule was loaded with it, and, with 3 retailers and an equal number of manufacturers in evidence, it's apparent that ham radio is in for another revolution. Typically it's in for another round of controversy as well, as the debate over microprocessors gets underway in earnest.

Warren Elly WA1GUD/1
Bennington NH

Hams to the Rescue

Using the airwaves and lots of goodwill, a band of local ham radio operators cut through international red tape to airlift a seriously ill American from Mexicali to a hospital here.

Robert Lake Carden Jr., 27, of New York state, was in Veterans Hospital today after the San Diego County Amateur Radio Council put up $1,700 bail for alleged crimes in Mexico and flew him here in a rented plane piloted by a local ham.

Members of the club got the original bail reduced from $9,000 to $1,700; a member put up all the money at once pending pledges that were made over the radio.

Another member rented a four-seater plane and flew down to Mexicali yesterday, the bail was paid and the Mexican Red Cross rushed Carden to the border at Calexico.

The Fire Department there supplied another ambulance which sped to the airport, where Carden was placed in the plane and flown to Montgomery Field. He said very little on the flight.

An ambulance service waived its customary fee and took the heavily sedated man to the hospital.

Doctors there were conducting a series of tests to determine the exact nature of Carden's illness. He had told some of the hams that he was dying of throat cancer and could not get proper treatment in Mexicali.

Carden's flight to freedom began a few weeks ago as he lay in the general hospital at Mexicali. He told Umberto Wang, a medical student, that he was dying of throat cancer and wanted American ham operators to contact his mother in New York.

Wang happens to be a ham, and passed the message along to a fellow Mexicali ham who he knew was in contact with hams on this side of the border.

Jim Smith of Ocotillo, who belongs to the San Diego ham outfit, picked up the call and relayed it to many of the 4,000 members of the group. One of them called Carden's parents, who said they had no money to help.

Interest in the issue spread quickly, and a "Rescue Robert" fund was established with the goal of bringing the man out of Mexico. San Diego hams appealed for help to the U.S. consulate in Tijuana, but were unable to obtain assistance.

Paul Hower, a local ham who piloted the plane yesterday, explained how Carden came to be in custody according to what the man told Smith. The Ocotillo man visited Carden often during his many trips to discuss the matter with Mexican officials.

Carden told Smith he lives in Lockport, N.Y., and served three years in the Marine Corps. He was on the West Coast in April visiting friends.

In Barstow, he met a man and two girls who invited him to go to Mexico with them, he said, and the group visited border cities.

One of the girls paid for the food and lodging of the group with credit cards she said belonged to her mother, Carden said. However, a Mexicali hotelman got suspicious and called police.

The other couple had fled, but Carden and one girl were arrested. The girl was freed because she was 16; Carden was jailed.

But he was hospitalized when he became ill with what he said was cancer of the throat. He said that he had been fed intravenously for 60 days and would die if not treated in this country.

Johnny Johnston, a ham who got involved in the case, went to Mexicali

Continued on page 89

Looking *West*

Bill Pasternak WA6ITF
14725 Titus St. #4
Panorama City CA 91402

We have probably heard the nation of Israel referred to as the "Garden" of the Middle East, in that from this "desert" the Israel people have carved a flourishing land of plenty – a place that they call a "land of milk and honey." It seems as though it's not only the products of "old Mother Nature" that have come to flourish there, but VHF and VHF repeaters as well. How do I come to make this statement? Thanks to Yuval 4X4FN, recently portable 6, Looking West has the opportunity of bringing you a bit of information as to what Israeli amateurs are doing with two meters.

Yuval was on a trip to the southland when I encountered him on the WR6ABB repeater system here in Los Angeles. To be a bit more specific, he was en route from Los Angeles to San Diego and had a lot of time to pass as he headed south on I-405. After introductions and the "warm PARC welcome," I began to question Yuval about what is happening VHF-wise in his homeland, with the following being a summary of the information that came forth as a result.

At present there are at least three operative two meter systems, all operating on the same channel pair of 145.175 in and 145.775 out. One of the three operational systems is located in the area of the city of Haifa, another near Beersheba, and the last at Kibbutz Sasa (serving the Upper Galilee). A fourth system, also on the same channel pair, was being prepared for the Tel Aviv area when Yuval departed for the USA. Whether it is operational or not at this writing is unknown.

Now, unlike repeaters here in the USA, Israeli repeaters do not have distinctive callsigns such as the WRs we have come to know, and most simply operate under the call of the amateur or amateurs responsible for the installation of the system. Most do not have auto-ID, so you sort of have to kerchunk a system to see if it's on the air. According to Yuval, "visitors" using these systems are quite welcome, and American amateurs planning to visit Israel can obtain a permit to operate by contacting the appropriate ministry prior to departure to secure a permit. I believe that it was the Ministry of Communication, but I am not too sure since by this point signals were beginning to drop out. Possibly it was the Ministry of Transportation; I will try to clarify this point in the near future.

So much for repeater operation, but for this story. Simplex (direct) is also alive and well and growing rapidly. The prime simplex channel is the repeater output frequency of 145.775, but when that channel is busy you will find the overflow sitting on both 145.25 and 145.50, in that order. In the Tel Aviv area, I am told that simplex is busy most of the day and well into the evening. Language barrier? Not according to Yuval, since he says that most Israeli amateurs speak fluent English. And with this you have a quick glance at what VHF-minded amateurs elsewhere in the world are up to – a chance to glimpse at the achievements of others in the worldwide community we know as amateur radio. Now on to what we promised last month, or at least close to it: a glimpse at a real great guy on a trip here to the southland, John B. Johnston K3BNS, Chief of the FCC's Amateur and Citizens Division.

In case you have not guessed it by the foregoing, I happen to like John. In my personal opinion he is the best thing to happen to amateur radio in the many years that I have been a part of it. What he has accomplished on our behalf in just one short year is something that he and we can all be proud of. Thanks to his trust and belief in us, and his willingness to press for more freedom from regulation so that amateur radio can again grow and prosper, he will long be remembered within our ranks.

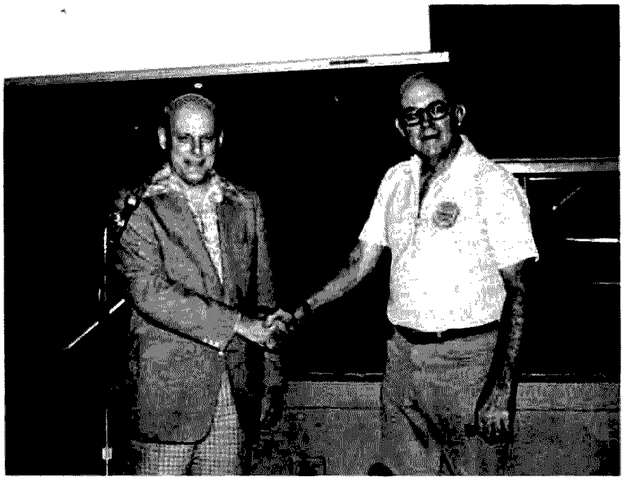

San Fernando Valley ARC President Fred Killitz WB6EJG formally welcomes John.

I had hoped to arrange a private interview with John while he was here in L.A., and had even approached Capt. Dick McKay K6VGP, John's host, on the matter. Unfortunately, due to schedule conflicts on my part, no feasible time could be found. The simple fact was that I had to put in a lot of overtime at work, and that limited my free time a bit. However, I found myself in a position to attend and participate in two evening open meetings that John had with area amateurs. Before continuing, though, and in deference to John, I must say that the format I will follow is that of transcribing from tape both the questions and John's answers, close to verbatim. These questions were posed by members and visitors to meetings sponsored by the Palisades Amateur Radio Club in Culver City and the San Fernando Valley Radio Club in Panorama City/Van Nuys, during the week of August 16.

First, let us set the scene. The place is the Veterans Memorial Hall in Culver City, California, the evening of August 18th. Dan Deckert WA6FQC, President of the Palisades Amateur Radio Club, addresses the assembled multitude. Dan proudly welcomes John to this meeting on behalf of PARC, and introduces him to the audience. This introduction is followed by a 3 minute standing ovation – a totally spontaneous showing of affection toward their friend from back East.

John began the formal part of his presentation, after greeting the crowd, by showing a series of color slides that told about himself: his specific interests in amateur radio, his station, the radio clubs he has and does belong to, and some of his friends within the amateur community. It was a "here I am, come get to know me as a fellow ham" presentation that gave us all a bit more insight into this "man from the FCC." Then came the part that most of us had awaited – the open format question and answer session. All questions were made from the floor by fellow amateurs just like you and me. The following are what I feel are the pertinent subjects covered in both the meetings I attended and taped.

Question: What about 1979? (Questioner was referring to where amateur radio will stand at this upcoming conference.)

John: We probably have about the best organized working group of all the groups and I say that because Merle Glunt, who is the ARRL man working on that, who used to work for the FCC and is possibly one of our top international negotiators, says that he attends all the meetings: broadcast, common carrier, and so forth. He says we probably have the best organized group, and I also know that when we did our report – we have to file with the Library of Congress – as for the amateur, we have the best looking report, too.

However, that's to establish the FCC position, and I think, shortly, before too many months, there will be a first of a series of Notices of Inquiry coming out with what the FCC position is. I don't think we're going to get everything in that notice that the amateurs asked for, because we asked for an awful lot. We asked for all of our present bands; for our present bands to be expanded; for some new bands; and, you know, really sort of gorged ourselves writing to Santa Claus. But the fellows working on the group have done a fantastic job. Apparently they're working on a new document – that's the amateur group – to further support and justify our need for those frequencies.

Some of them (frequencies) are in trouble. I guess you've heard about the one that's probably nearest and dearest to your hearts, 146 to 148 MHz, which is not an amateur band in some parts of the world. I believe that the maritime or aviation is after that, looking for more VHF frequencies. 75 meters, 3.9 to 4.0 – the broadcasters have their eyes on that. The broadcasters also have their eyes on 160 meters, so, who knows? It's going to be an uphill fight all the way.

Question: This docket 20777, the bandwidth/mode docket. What is the purpose behind it?

John: We are trying to deregulate the service as much as possible. All regulatory agencies are under great pressure to deregulate and, looking around the FCC, the only service that was really asking for deregulation was the amateur service.

One of the big problems amateur radio has always had with the Commission has been when a new mode came along – a new teletype mode or whatever it is. Slow scan came along; that was a problem for a while. The Commission felt that in order to authorize someone to use that mode, they (the Commission) would have to have the equipment to monitor and intercept those messages to make sure they were consistent with the rules.

I tried to make a giant leap forward; I said that, well, maybe that thinking was good for the 20s or 30s or something like that, but it's harder and harder to get the appropriations to buy that equipment, particularly when you say you want to use it to monitor amateur transmissions – it's really tough to get the budget for that. So, let's try and go with something simpler. Maybe not talk about emissions – talk about bandwidth, though it's recognized that amateurs don't have a great capability in measuring bandwidth. But maybe if they had the requirement, things would develop. Maybe not. But then it would open up a whole new future, especially for the experimenters who wanted to experiment with new types (of emissions), and maybe amateur

radio could bring new modes of communication to the other services, develop new modes of communication.

The comments we've gotten seem to be kind of divided between the people who are forward looking and can appreciate that, and those who would say, "What about AM? . . . I like talking to my buddies on AM on 75 and I bought my rig 25 years ago and I hope I never have to buy another one."

Of course, the League, you know, did reject the whole idea, so I don't know. We really haven't scoured through those comments yet. But we were a little disappointed; we hoped we would get more from the amateur community on ways to solve this bandwidth measurement problem. It looked like by and large they've sort of thrown up their hands and said, "It's beyond us," which wasn't probably too good of a result – and frankly I think that we're probably back to "square one" looking for new ideas.

Question: What kind of reaction has the FCC received on the new RACES docket, and do you anticipate any alterations?

John: (Begins commentary with funny anecdote deleted here due to space limitations.) Basically, the amateurs came to us with tales of these very serious abuses that the local governments, the police and fire departments, who are eligible for their own services, were making of RACES. The Commission was just about ready to do away with it completely; that is the Department of Defense thing. We kind of presented the argument of "Let's give it one more chance. Let's take it out of the hands of the local governments. If they've got problems with frequencies and emissions available to them in their services, work those out within the services. Don't try to twist something in amateur radio around the wrong way, and let's try and get it back into the hands of the hams."

I don't have very many checks on that other than that the number of applications coming in has been very small, I understand, and we really don't know whether it is going to be a viable program or whether we should just go ahead and do away with the whole thing. I can't really tell at this point; I think it's too early.

Question: Two questions on the bandwidth docket that a lot of amateurs might be interested in. First of all, what about the future of ASCII, the computer code, and secondly, what about the future of amateur TV on 450? The bandwidth docket would essentially eliminate fast scan amateur TV from 420 to 450 MHz. What is the Commission going to do on both of these?

John: Well, you see, ASCII was one of the driving forces behind this, because in order to authorize it we have to go convince Congress to give us the money to go and buy ASCII machines to put in all of our monitoring stations around the country. You could put this away once and for all; then you come up with a better code and we are still talking bandwidth.

The television on 450: As you know, there has been quite a battle on the East coast with the television repeaters, and it did seem to be a rather localized thing. In order to bring out some discussion on this, and see what in the world do amateurs want to do with this, let's propose that they move on "up the band," where you can point and say they really are doing some development work. For TV on 450, it's awfully hard to make a case that "that's development work" and so forth. On 1215, 1296, it's a different story. I think that amateurs could make some very, very worthwhile contributions there, but there has been a reluctance to go because it's easier to get 450 gear, as you know. And we did note that out here, in this part of the country, that you were using 450 for voice communications very heavily. So we did want to get that question out in the open and give all sides a chance to comment and to raise the issue.

Question: Johnny, I don't know whether you are aware of what has been going on in the field of amateur radio public relations, especially out here, but what do you think of amateurs going to the public and introducing amateur radio to them like on radio, TV, etc?

John: Fantastic! Absolutely fantastic. You know, it used to bother me when I was in the rules branch; I used to keep track, and by golly, every time I checked we were losing an average of 350 licensees a month. 350 a month! It just kept going down and down and down, while all the other services were going up. Now there have been a number of things which have happened.

Of course, a lot of people have now become introduced to the glories of two-way radio by virtue of "that other service." But amateur radio has begun to spring up, and a lot of it has to do with the public relations work you are doing and the work your clubs are doing in the training programs. That really is great.

I have heard Commissioners in the past say that "hams were an elite group" – a closed group – and they really weren't living up to all those purposes in 97.1 and all that. It really warms the cockles of my heart to see this (referring to the new attitude of today's more outgoing amateurs in "going public").

There's more . . . a lot more . . . two cassettes full, but for this month we are plum out of space. We will continue with John's comments next month, along with a few other goodies. In the meantime, I wish to express my sincere gratitude to Jim Davis WBØSQP/6, who "blew into town" at the right time and with the proper recording equipment to make a lot of what you read this month possible; to Bill Orenstein KH6IAF/6, whose exceptional expertise in the field of audio and public address systems made recording the San Fernando Club a snap; and most of all to Mr. John B. Johnston K3BNS, for visiting with us in our town and at our radio clubs and for being the warm and gracious individual he is. If ever you have a chance to attend one of John's presentations or should you get a chance to have him as a guest speaker at your club, jump at the opportunity. You will be glad you did.

It was SRO at the San Fernando Valley ARC for John's program!

John is greeted by Lenore Jensen W6NAZ, ARRL public relations assistant for Southern California and "amateur radio's most charming lady."

CONTESTS

Editor:
Robert Baker WB2GFE
15 Windsor Dr.
Atco NJ 08004

Please send all contest information directly to me at the address listed above, preferably at least three months before the date of the scheduled event. In other words, the announcement for an event on May 1, 1977, should hopefully be submitted by February 1, 1977.

TAC CONTEST
Starts: 1800 GMT
December 4
Ends: 1800 GMT
December 5

Entries may be single or multi-operator class. All contacts on 3.5 to 3.6 MHz, CW only. General call is "CQ QMF."

EXCHANGE:
RST/001 and progressive QSO numbers from 001.

SCORING:
Contacts with own country, 1 point; each call area in W/K, UA etc., VE/VO, and VK counts as separate country. Contacts with stations in same continent, 2 points; other continents, 5 points. Contacts with HQ station GW8WJ or GW6AQ count 25 points. Total score is sum of contact points times total number of prefixes worked (same as for WPX).

ENTRIES:
Logs must be sent not later than January 31, 1977 to: Peter Lumb G3IRM, 14 Linton Gardens, Bury Saint Edmunds, Suffolk IP33 2DZ, ENGLAND.

ARRL 160 METER CONTEST
Starts: 2200 GMT Friday
December 4
Ends: 1600 GMT Sunday
December 5

The 7th annual ARRL 160 Meter Contest is open to all amateurs on CW only. Multi-operator work is permitted and scores will be listed separately in the results, but they will not be eligible for certificates.

EXCHANGE:
RST and ARRL section or country.

SCORING:
QSOs with amateurs in an ARRL section count 2 points; QSOs with amateurs not in an ARRL section are worth 5 points. DX to DX QSOs do not count. Multiplier is the total number of ARRL sections (74), VE8, and foreign countries worked.

AWARDS:
Certificates will be awarded for section and non W/VE country high scores. Division high scores will have their section award endorsed with an appropriate seal.

FORMS:
It is suggested that contest forms be obtained from ARRL, 225 Main St., Newington CT 06111. Check sheets are not required but a penalty of 3 additional contacts will be made for each duplicate contact.

These rules were taken from last year's contest. For complete rules, see the November issue of QST.

ARRL 10 METER CONTEST
Starts: 1200 GMT Saturday,
December 11
Ends: 2359 GMT Sunday,
December 12

The contest is open to all amateurs worldwide. All QSOs must take place on 10 meters and OSCAR QSOs are valid. Each station can be worked on phone-to-phone and CW-to-CW, and anyone can work anyone. All CW contacts must be made between 28.0 and 28.5 MHz, unless working through OSCAR. When operating on 10 meters, please avoid the OSCAR downlink frequencies.

CLASSES:
Entries will be classified as either single or multiple operator stations. Multiple transmitter stations are not allowed.

EXCHANGE:
All W/VE stations will send RS(T) and state or province. Others will send RS(T) and consecutive serial number starting with 001. Stations that are not land based will send RS(T) and ITU Region (1, 2 or 3). The District of Columbia is counted as part of Maryland.

SCORING:
Each completed QSO counts 2 points, or 4 points if with a W or K Novice. The multiplier is the sum of the total number of states, Canadian call areas (max. 9), ARRL countries (not US or Canada), and ITU regions from non-land based stations. Final score is the sum of the QSO points times the total multiplier.

AWARDS:
A certificate will be awarded to the highest scoring single operator station in each section, Canadian call area, and foreign country. Region awards for non-land based stations, and awards for multi-operator and Novice stations will be issued if warranted.

FORMS:
It is suggested that contest forms be obtained before the contest from ARRL, 225 Main St., Newington CT 06111; include an SASE. Check sheets are not required but a penalty of 3 additional contacts will be made for each duplicate contact.

These rules were taken from last years contest. For complete rules, see the November issue of QST.

HUNGARIAN DX CONTEST
Starts: 1600 GMT Saturday,
December 11
Ends: 1600 GMT Sunday,
December 12

The contest is sponsored by the Hungarian Radioamateur Society and is open to any licensed radio amateur. All amateur bands from 80 to 10 meters may be used on CW only. General call is "TEST HA" while Hungarian will give "TEST WW." Entries may be in any of the following classes: single op, single band; single op, multi-band; or multi-op, multi-band.

EXCHANGE:
RST and continuous serial number from 001. After their signal report, Hungarian stations will give a two letter code for their location (county) as follows: BA, BP, BE, BN, BO, CS, FE, GY, HA, HE, KO, NO, PE, SA, SO, SZ, TO, VA, VE, ZA.

SCORING:
Each HA QSO counts 1 point. The same station may be worked only once per band. Each different HA county worked counts 1 multiplier point per band. Final score is total QSO points times sum of multiplier points from each band.

ENTRIES:
Logs must be made in usual form with summary sheet and signed declaration. They should be mailed within 6 weeks after the contest to: Radio Amateur League of Budapest, H-1553 Budapest, P.O. Box 2, HUNGARY.

AWARDS:
Certificates to first place station from each country in each class or section. Additional places if warranted.

ARRL STRAIGHT KEY NIGHT
0100-0700 GMT SATURDAY
JANUARY 1

Check *QST* for any changes in the rules!

Basically, rules require the use of a straight key only. Send "SKN" instead of "RST" during QSOs, to help identify contest stations. On 80-40-20 meters, try 060 to 080 kHz up from the bottom edge of the band. On Novice bands, try 10 kHz up from the bottom of the Novice band. After the contest period, send a list of calls of the stations contacted during the contest period, plus your note for the best fist heard. Please mail entries as soon as possible to ARRL, 225 Main Street, Newington CT 06111.

SOWP CHRISTMAS QSO PARTY

The Society of Wireless Pioneers will conduct a membership on-the-air QSO Party on the weekend of December 18 and 19, 1976. The party will cover the full 48-hour GMT period and will be the first "voice" party scheduled by the Society. The purpose of the affair will be to give members an opportunity to meet one another and to pass along their season's greetings, etc. There will be

CALENDAR

Dec 4 - 5	ARRL 160 Meter Contest
Dec 4 - 5	TAC Contest
Dec 11 - 12	ARRL 10 Meter Contest
Dec 11 - 12	Hungarian DX Contest
Jan 1	Straight Key Night (ARRL)
Jan 15 - 16	QRP Winter Contest
Feb 19 - 20	YLRL YL-OM Contest – Phone
Mar 5 - 6	YLRL YL-OM Contest – CW
Mar 26 - 27	CQ Worldwide WPX SSB Contest
Apr 12 - 13	YLRL DX-YL to Stateside YL Contest – CW
Apr 26 - 27	YLRL DX-YL to Stateside YL Contest – Phone

Note: The official dates for the 1977 ARRL contests had not been announced at the time of this writing. Tentative dates should be:

Jan 1 - 2	VHF Sweepstakes
Feb 5 - 6	DX Contest – Phone
Feb 5 - 13	Novice Roundup
Feb 19 - 20	DX Contest – CW
Mar 5 - 6	DX Contest – Phone
Mar 19 - 20	DX Contest – CW

no formal exchange requirements and no need to submit logs.

All members with a phone capability are encouraged to participate. The call will be CQ SOWP. While there will be no certificates awarded, everyone who takes part will be a winner by having an opportunity to renew old friendships, establish new ones and to continue a comaraderie developed over the years.

Suggested frequencies for the affair are 25 kHz (±) 5 kHz up from the low end of the General class phone portion of each amateur band.

BUDAPEST AWARD

This award was originally founded in 1963, but the rules were changed effective January 1st, 1976 as follows:

The certificate is issued in one class and may be received only once. There are no endorsements. Contacts are valid after January 1, 1959, but each station may be used only once in your application. Any amateur band and mode may be used including active land or air VHF/UHF repeaters. European stations must contact 75 HA5 or HG5 stations, while DX stations (including US) need only contact 25. On VHF, only 50 different HA/HG5 stations or 5000 kms summarized distance; any contacts made via satellites or via the moon count with 500 kms/QSO value. Send a list of your contacts and 10 IRCs to the Award Manager of BRAL, Dezso Tarcsay HA5HA, H-1553 Budapest, P.O. Box 2, HUNGARY. The award is also available for SWLs on a "heard" basis with the same rules and fee.

BICENTENNIAL WORKED ALL STATES NET AWARD

The Bicentennial Worked All States Net that meets on 3905 kHz nightly at 0500 GMT is now offering its award for working all states during the Bicentennial year. All contacts must be made on the net frequency during net operation or at least within one hour of the beginning or closing of the net. They must be made from the same QTH (or from locations not more than 25 miles apart) and confirmed in writing. Cost of the award is S2.00 and QSLs need not be sent; only an application form verified by another amateur is requested. For an application and complete information contact Gene Densmore AA4WCG, 2125 Cambridge Drive, Tallahassee FL 32304. By the way, the awards will not be numbered or dated other than 1976, so there is no rush or time limit other than making the required contacts during 1976!

WORKED ALL NEW HAMPSHIRE

The Concord Brasspounders, Inc., of Concord, N.H., are again making available to all qualified amateurs their Certificate of Achievement for working and confirming all ten New Hampshire counties. The ten QSL cards or a request for information should be sent to Basil Cutting W1JB, Suncook, N.H. 03275.

RESULTS

RESULTS OF 1976 BERMUDA CONTEST

Top N.A. Stations:

CW		Phone	
K2BT	11,253 pts	W1HFB	37,170 pts
VE1CD	10,668	W4UPJ	21,942
WA2DIG	6,402	K2BT	19,032
WØOUE	6,384	VE1AGH	17,346
W9OHH	5,451	W1DO	14,076

Top U.K. Stations:

CW		Phone	
G3FXB	32,637	G4GI	46,494
G4BUE	22,176	G3VPW	24,420
G4CNY	14,739	GW4BLE	23,904

Island Winners:

CW – G4BKI/VP9 Phone – VP9IB

Oscar Orbits

Oscar 6 Orbital Information					Oscar 7 Orbital Information			
Orbit	Date (Dec)	Time (GMT)	Longitude of Eq. Crossing °W	Mode	Orbit	Date (Dec)	Time (GMT)	Longitude of Eq. Crossing °W
18876	1	0146:12	84.7	BX	9350	1	0035:16	58.6
18888	2	0046:08	69.7	A	9363	2	0129:33	72.2
18901	3	0141:04	83.4	B	9375	3	0028:54	57.0
18913	4	0041:00	68.4	A	9388	4	0123:11	70.6
18926	5	0135:56	82.2	B	9400	5	0022:31	55.4
18938	6	0035:52	67.2	A	9413	6	0116:48	69.0
18951	7	0130:47	80.9	B	9425	7	0016:08	53.8
18963	8	0030:43	65.9	AX	9438	8	0110:25	67.4
18976	9	0125:39	79.7	B	9450	9	0009:45	52.2
18988	10	0025:35	64.7	A	9463	10	0104:02	65.8
19001	11	0120:31	78.4	B	9475	11	0003:23	50.6
19013	12	0020:27	63.4	A	9488	12	0057:40	64.2
19026	13	0115:22	77.1	B	9501	13	0151:57	77.8
19038	14	0015:18	62.1	A	9513	14	0051:17	62.6
19051	15	0110:14	75.9	BX	9526	15	0145:34	76.2
19063	16	0010:10	60.9	A	9538	16	0044:54	61.0
19076	17	0105:06	74.6	B	9551	17	0139:11	74.6
19088	18	0005:02	59.6	A	9563	18	0038:31	59.4
19101	19	0059:57	73.4	B	9576	19	0132:48	73.0
19114	20	0154:53	87.1	A	9588	20	0032:09	57.8
19126	21	0054:49	72.1	B	9601	21	0126:26	71.4
19139	22	0149:45	85.9	AX	9613	22	0025:46	56.2
19151	23	0049:41	70.9	B	9626	23	0120:03	69.8
19164	24	0144:36	84.6	A	9638	24	0019:23	54.6
19176	25	0044:32	69.6	B	9651	25	0113:40	68.2
19189	26	0139:28	83.4	A	9663	26	0013:00	53.0
19201	27	0039:24	68.4	B	9676	27	0107:17	66.6
19214	28	0134:20	82.1	A	9688	28	0006:38	51.4
19226	29	0034:16	67.1	BX	9701	29	0100:55	65.0
19239	30	0129:11	80.8	A	9713	30	0000:15	49.9
19251	31	0029:07	65.8	A	9726	31	0054:32	63.4

Effective 1 October, 1976, all AO-7 mode B orbits which fall on GMT Mondays will be designated as QRP orbits, as was done during mid-June, 1976. The success of the three day QRP test has prompted these extra QRP orbits, and it is hoped that users of the AMSAT-OSCAR 7 mode B transponder will reduce their signals to the recommended *ten watts* effective radiated power during these orbits. The use of lower power is also highly recommended during other AMSAT-OSCAR satellite passes because of the beneficial effect it has on the battery. As AO-7 grows older, its battery is deteriorating, and this deterioration is accelerated by users running higher power than is being recommended by AMSAT (100 Watts effective radiated power). This 100 Watts erp *maximum* is enough power to produce very readable signals from horizon to horizon with a small antenna and the average 144 MHz receiving setup. If mode B users cannot hear their 100 Watt erp signal at all times during a pass of AO-7, they should look at their receiving system and should NOT raise their power in order to hear themselves. With cooperation from all users, the AMSAT-OSCAR 7 communications satellite will provide service for the worldwide radio amateur community for years to come.

LETTERS

FORM A POSSE

WA1LET is on the prowl after the rip-offers. After my friend WA1SGX had his 2 meter rig ripped off his car, I put my thinking cap on and started the wheels turning, and this is what I came up with.

I am a member of the "Fidelity Amateur Radio Club," so I am going to propose a rip-off committee, with each member equipped with an Avalanche transistor oscillator in his rig (commercial manufacturers take note) tuned to an outboard receiver (such as a tunnel diode job) so that in the event of his set being ripped off, he can locate the direction his set is going. After the set has gone beyond the legal limit of the license free transmissions set by the FCC, that is where the club gets in the act, by having a club sponsored sensitive receiver able to tune to all the club members' frequencies, giving a master control to direct the posse of members going after the rip-off artist and, with such aid, should be able surround the culprit, giving the guy 3 choices: turn him over to the police, hang him, give back the radio with loot to cover the damage done to the owner.

Remember the old days. It will be like a rustler hunt. Maybe I have been reading too many westerns. I believe that only by action on the part of the hams will we be safe from the easy-picking boys. Every club should form a protective committee. The Avalanche oscillator is the only oscillator (I believe) that can give a tremendous pulse with small power. All the bright boys should get busy and send in to *73* their brain child, or send to me, WA1LET, so that we can all get together and scotch the pilferers. I have not had any trouble myself, but have stuck my neck out in the cause of the hams, e.g., in the dockets that have been an enemy to the hams, even when it did not affect me. I hope that my little gabfest will do a little good.

Cy Lievesley WA1LET
142 Brightman St.
Fall River MA 02720

The wheels turned alright — and made mush.

FAIR WEATHER FRIEND

Congratulations on two major counts: 1) for bringing *73* to what it is and continuing to improve it, and 2) for that editorial in the October '76 issue that I just read. I've read some of your "editorialism" in the past that has (on two occasions) caused me to drop my subscription to *73*.

This one shows class. This one tells it like it is — all the way through — about the uPs and even about the contents of *73 Magazine*. I'm referring (if you hadn't guessed) to the I/O Editorial.

I like *73* because *now*, more than any other time in its history, it is a broader-based electronic experimenter's journal. Keep going, and please keep us informed regarding your upcoming Pers-Comp mag.

I've been hamming for about 10 years, from 80m through 450 MHz, and am just recently gaining a keen interest in computer electronics — especially uPs.

Bob Gromer WA7NMJ
Glendale AZ

Thanks, oh fair weather friend. — Wayne.

FUTURE SHOCK

As I was reading the August issue of *73* (around the fourth of July), the article about the computerized ham station seemed very familiar.

Digging through my vast collection of *73* mags, I found a story in the January, 1967, issue. The story was called, "The QRZ Machine," and at the time was science fiction.

The "machine" was described as being about the size of a portable typewriter, and was able to copy CW.

The 1976 Altair microprocessor is a bit larger and in the example copied RTTY, but that ain't bad in just 9 years.

Where would we be today without science fiction to encourage scientific experimentation and advancement?

Tom Grabowski K3SPY
Baltimore MD

Better off.

ABOVE AND BEYOND

Just a few informal remarks and comments on two of the firms that advertise in *73 Magazine*.

I placed an order with B & F Enterprises in Peabody, Mass., for two speaker enclosures as advertised in *73*. Although they did not advertise crossover networks, I asked them, if possible, to send me two threeway crossovers. The order arrived minus one crossover. A communication followed shortly after saying they were backordering one crossover, as they only had one for the original shipment. I asked them to charge the amount of the purchase to my BankAmericard. Now they could have charged me for the whole order, but they only charged me for what they had shipped, involving additional paperwork when they shipped the second crossover, which arrived a few days later. Now this showed consideration and fairness with their buying customers. Also, the shipment arrived so promptly that I don't see how they could have checked out my BankAmericard account before shipment. It is a pleasure to do business with companies that show consideration in their dealings with the buying public.

I also placed an order with Aldelco of Lynbrook, N.Y., for some diodes and other materials. I sent them a postal money order to cover the amount of the purchase, and when the order arrived, there had been an error filling the order as they did not send me some of the diodes that I had ordered, and they sent some that I had not ordered. I sent them a communication stating what I had received and not received and asked them to check my original order. I offered to send the diodes that I had not ordered back to them on arrival of the diodes that I had ordered, to fill my original order. A few days later, the diodes that were missing in the original order arrived with a note of apology and stating that I did not need to return the unordered diodes, but to keep them with their compliments. Now you can't ask for anything more fair than that.

And so, Wayne, thanks for your care in selecting advertising firms that are reliable and considerate to advertise in *73*. It is a pleasure to us readers of *73* to do business with that type of firm.

Continued success to you and your staff.

J. Wm. Anderson W6QV
Sunland CA

THE REVOLUTION

Your computer articles have brought me up-to-date after being out of the data processing business for over four years. During this time, I am amazed at the microcomputer revolution, in terms of the available processing power for such a small cost. As a former programmer and computer salesman, perhaps you would benefit from some of my reflections on the current state of the art — sort of like the comments emanating from your "Ancient Aviator."

My first reaction to the microcomputer revolution is simply that very few people even begin to appreciate the problem-solving horsepower possible with a microcomputer. Back in the 1960s I sold small scale business computer systems (for a $100,000 plus purchase price) that were roughly comparable in processing power with the new 6800s and 8080s which are available for less than $10,000 for a disk system. In view of this, it appears that the public must be "educated" in terms of how a microcomputer can be used as a tremendous extension of the mind to handle both home and business applications. To put it another way, less emphasis should be placed on silly games and more thought should be directed towards the way to put a microcomputer to work in the household, hobby and business world.

My second reaction: With the availability of low cost computing, there is a need for good self-teaching programmed instruction manuals and teaching aids. It seems that, at this point, we have low cost effective hardware with a scarcity of materials capable of quickly acquainting the uninitiated in their use. If this market is to grow, this problem must be solved with self-teaching applications and programming manuals, as well as manuals that will show how this equipment can be used in solving the day-to-day problems for which it is so well suited.

My final reaction applies to the question of how to best communicate current knowledge available to other amateur radio operators like myself. In this respect, it seems that we need to organize a hobby computer net that will meet regularly to disseminate useful information. If you know of such a net, please let me know. Also, I would appreciate having the names and addresses of any hobby computer user groups which would be willing to share their knowledge with us mid-westerners who are just beginning to learn about this west coast developed technology.

Robert E. Bunn WAØLKE
Bunn Oil and Supply Co.
508 Porter Wagoner Blvd.
West Plains MO 65775

If you get netted let us know. Re self-teaching, that's what reading 73 *I/O articles and* Kilobyte *is all about.*

THE ELECTRONIC MENSA?

I've just read the article by Robert Fields in the September *73*, and fault it only insofar as it fell short in its castigation of the God Syndrome rampant in amateur ranks.

First, I'm not a CBer (not recently — when CB was young, and legality was in vogue, I had a license, but it has long since gone west). Nor am I a ham. My familiarity with both code and theory is adequate to allow my getting a General ticket tomorrow if so desired, but as of this writing I have seen no facet of ham radio sufficiently challenging that I should waste time so doing.

Further, inasmuch as the majority

of hams of my acquaintance are pompous, stuffed-shirt elitists with delusions of grandeur, I find no incentive in joining up just for the company. And, it is this insufferable arrogance that is turning off would-be hams in droves.

Also, let's forget that bull about ham radio being anything more than a medium for rag chewing. The experimental phase went out with the 6L6, and modern R/D labs backed by corporate financing are the innovators now, not the basement black-box builder. The day of the lone inventor is just about kaput. Granted, hams are using state-of-the-art technology — computers, TV, etc. — but none of it came from ham circles.

If you ham types want to multiply your folds, get off your goddamn pedestals, dismount from your shining white steeds, and mingle with the masses. Anyone with half a wit who's had a taste of modern-day CB would welcome ham radio if, in it, he could find the camaraderie that CB, with all its failings, offers on and off the air. It is sad that in most cases he encounters the snobbery of ham radio's electronic Mensa, and, as Mr. Fields says, trots off to unload his wallet on a Pentax instead of an ICOM or a Heathkit.

K. T. Derek
Pittsfield MA

Well, OM, there is some truth to what you say . . . that part about CBers being friendly. Other than that it appears to me that you are a sad victim of what is called projection in psychological circles. If you do decide to give hamming a try, I think you may find, as the rest of us have, that hams are about as friendly a gang as you could ask for . . . they help each other . . . love to talk . . . and are going way out of their way all over the country to help CBers get their ham tickets. Sure there are a few curmudgeons . . . they are there in CB too, but that doesn't change the average ham from being a great guy. If you'd read much of 73 you would know that hams are in the forefront of many new technical developments . . . such as RTTY, SSTV, and even computer applications. As one of the founders of American Mensa (1960) and a member ever since, I have attended meetings in many cities and seldom have I run up against the snobbery you seem to have found. If that were the case, Mensa would have disappeared long ago. I wonder what other readers think about hams being snobs? — Wayne.

SATISFIED

I am prompted to write this both in praise and disgust.

The praise goes to the Delaware Emergency Net for their damn good work during the Belle hurricane: Elmer W3YAH, Vince W3SEG and all the others who pitched in and did their very best.

Elmer lives on Lewes Island, and when the island was being evacuated, he said "As long as I have power, I'll be on the air, and when I lose it, I'll go too." That is ham radio above and beyond.

The disgust is with the selfish slobs who sat down right on freq and, after repeated reminding, called CQ and finished a QSO, and also with the ones who opened up with an unmodulated carrier for extended periods.

Well, I said it, and I'm satisfied. Thanks for listening.

Bill Simms WA2JNV
Toms River NJ

Jamming is a growing facet of amateur radio.

FEEDBACK

Please note a correction to my article, "ASCII/Baudot Converter for Your TVT," which began on page 150 of the November, 1976, issue. In Table 2(b), $5/A_1$ should be a one instead of a zero.

Jeff Roloff
Champaign IL

Let's watch that stuff, Roloff.

COMMON INTERESTS

Keep up the good work on *73*; it is appreciated. I am not a microcomputer nut (yet), but the articles are interesting as I use an IBM system 360/370 in my work. The ads for Mother Bell are an eye-opener, especially for those of us who work for AT&T. It's nice to see the two communications interests (Bell and ham) cooperating for a change. Now if the FCC will just let us legalize tariffs for phone/autopatch systems!

Arv Evans K7HKL
Salt Lake City UT

GOTTEN

A short comment on your I/O Report in the August issue of *73 Mag*: I think you are really missing the boat by excluding the DEC LSI-11 and PDP-11/PDP-8 programs from your section. Various computer clubs around the nation have acquired OEM status with DEC to buy LSI-11s in quantities and pass the low prices on to members. One club in California has helped over 500 hackers to get LSI-11s. When I was working at DEC, the orders were flooding in. And why not, for the price of an Altair or IMSAI look what you can get from DEC . . . the LSI-11 is about $650, an interface is another $100 or $150, and all you need is a power supply and terminal. No need for a monitor program with the built-in ODT debugging. And it comes with 4K x 16 RAM standard, with power fail and line clock! They also produce a PDP-8/A, a single board PDP-8 that would also be in the price range of the hobbyist. On top of all this, DEC has been making MPS boards for several years that also may be of interest to hackers.

Bob Baker WB2GFE
Atco NJ

I think you got me on that one, Bob. I wasn't thinking of the LSI-11 when I singled out the DEC PDP-11. There is certainly going to be hobbyist (and other) software generated for the LSI-11 which might be of interest to I/O readers. If any comes my way I'll give it every consideration. And with regard to the PDP-8 . . . I hope we see software for it coming into the hobby community both from simulators being written (for an 8080) and/or from the popularity of the Intersil 6100 getting a boost. — John.

AN I/O RECORD

In response to one of your ads, I recently purchased the Godbout Software Board. First, I would like to commend Godbout for their excellent service and their fine product. I received my order within five days after the order was placed — a record for computer-related items.

I experienced a few problems in interpreting the literature. I left my number with Godbout and later that day Bill Godbout returned my call — from California to Chattanooga — and we soon had the problems resolved. The Software Board worked the first time I plugged it in the Imsai computer.

To operate this board, one just "examines" location F000 in hex or 360,000 in octal and then hits Run. Thereafter one enters programs using the Intel 8080 mnemonics.

73 Magazine seems to have a policy of accepting ads from only reputable dealers who won't rip off the ham. For those hams considering entering "computronics," you would do well to stay with such firms as Godbout, Hal Communications and those who advertise in *73*. You haven't seen any Trigger Electronics ads lately, have you?

Nenad S. Downing WB4SLO
Chattanooga TN

Trigger . . . hmmm, wasn't he a QST advertiser?

GONE FISHING

I have used my back issue ham literature to "bait" CB operators. To date can count one total convert and several "nibbles." Photo taken at my portable QTH.

Hal Empie WA7ZYD
Duncan AZ

INACTIVE BROTHERS

This is a CQ to all hams who are

heart pacemaker wearers! Numerous letters to the ham journals indicate a growing need for information about EMI (electromagnetic interference), especially as it relates to ham operating! Pacemaker wearers generally do not have access to reports of EMI susceptibility tests made by military and/or federally sponsored (FDA/BRH) testing programs. As a result, the lack of relevant information leads to confusing, and often erroneous, "advice" from well-meaning but ill-advised individuals.

As a pacemaker wearer since April 1975, and a ham since 1924, I have been compiling interference data in an effort to (1) know my own operating limitations, if any, and (2) to help any other hams with pacemakers who are staying off the air because of fear of pacemaker failure caused by radiation from their rigs.

Will any reader who wears a pacemaker write me and describe any experience which seemed to have been EMI related? For convenience, and to elicit the maximum information, I have prepared a questionnaire which is available for an SASE. This is a worthwhile project, but many answers are needed. For a little bit of your time and a postage stamp, you could get an otherwise inactive brother ham back on the air! QRU?

W. R. (Bill) Schoppe
481 89 Ave. N.
St. Petersburg FL 33702

POINT

In answer to Dave Powell WA4BRI's question in the Letters column of October "Why build in an error?" with reference to my "Instant Counter Calibration" article in the August issue of *73*: There is no error from a practical standpoint!

I won't argue the position that 15,734.265 Hz is the theoretical color horizontal sync rate. In practice, however, 15,734.26374 Hz won't be found any more often than 15,734.265 Hz for the simple reason that the idea behind using a rubidium standard in broadcasting is not so much absolute accuracy, as it is long-term stability. The broadcaster isn't as interested in the absolute frequency (as long as it is well within FCC tolerances) as he is in phasing his local and/or remote equipment to one *stable* standard. This circumstance, however, doesn't make using the horizontal sync signal any less valuable for the radio amateur because it is the most accurate signal available to the average ham, plus it is traceable to NBS through the published offsets.

Additionally, as was mentioned in my article, unless your counter is phase locked to the incoming signal, there will be a ±1 digit ambiguity. My Heath IB-1103 would interpolate Mr. Powell's figure of 15,734.26374 Hz as 15,734.264 Hz, and the least significant digit ambiguity could make this either 15,734.263 Hz or 15,734.265 Hz. To compound the dilemma, the guaranteed one second stability of the Heath counter is .5 ppm which in my case does indeed make the .08 ppm *error* WA4BRI refers to seem insignificant.

My caution with regard to making sure that you are tuned to a network colorcast is aimed mostly at some locally originated CATV (cable) system programs and newly formed low-budget broadcast stations who may not be referenced to a rubidium source. I would still stand behind that statement. The caution regarding "mini-cam" units also stands, if they are in the field and feeding back *live* video via microwave as the statement in my article implies. In this case, they are almost certainly not rubidium locked!

Incidentally, and in closing, I couldn't help but notice the piece in *QST*'s "Hints and Kinks" column for August, 1976 (which arrives *much* later than *73*'s August issue) recommending the same procedure that I cautioned AGAINST using, i.e., connecting directly to the TV receiver circuitry with the counter. I sincerely hope that no one falls victim to serious damage by using the *QST* approach (quite a "kink").

David F. Miller K9POX
Niles IL

Picky, picky.

COUNTER POINT

The letter by Dave Powell WA4BRI in the October letters regarding the article "Instant Counter Calibration" by David F. Miller K9PQX has introduced more errors than it has corrected!

The television networks employ far more precision in frequency generation than required by the FCC rules. The signal source as noted by Miller is a rubidium atomic oscillator for NBC and CBS and a cesium atomic oscillator for ABC. These sources synthesize 5 MHz. The color subcarrier is developed by multiplying 5 MHz by 63/88, producing the figure quoted by Miller, 3.5795454.

Next, take this number, multiply it by 2 and divide by 455. Presto, you have Miller's 15.734266.

In the future, it might be helpful to submit critical letters to the original author for comment before publication.

The references listed below contain more information on using color TV signals for calibration.

1. Davis, D. D., "How To Use The Television Color Signal For Calibrating A Crystal Oscillator," National Bureau of Standards, November 1974.
2. . . ., "Daily Television Frequency Transfer Measurements," Services Bulletin, National Bureau of Standards, Monthly (free).
3. Davis, Dick D., "Calibrating Crystal Oscillators With TV Color-Reference Signals," *Electronics*, Vol. 48, No. 6, (March 20, 1975), 107-112.
4. Robbins, Michael S., "Calibrating Frequency With Your TV," *Radio-Electronics*, Vol. 47, No. 9, (September 1976), 74-76.

Michael S. Robbins K6QAH
Los Angeles CA

You're quite a bookworm, Mike.

INFLATION, ETC.

I would appreciate it if you would publish the following in *73* as soon as possible:

"REPEATERMEISTER"
UPDATE

All negatives requested after 15 August, 1976, will incorporate the changes described below.

CW ID

ID initiate input IC, 7432, now has four initiate inputs — pins 1, 2, 4 and 5. Use 330 Ohm resistors to ground. This makes operation more convenient and less wasteful of gates.

Clock oscillator IC, 7400. Use a 5k trimpot with a 1k ¼ W resistor in parallel. This improves the operation of the oscillator and also limits the sending speed from 5 wpm to about 25 wpm.

TX hold transistor, Q1, 2N708. Any general purpose NPN switching transistor may be substituted. Be certain that IC will not be exceeded by the keying circuitry in the transmitter. Also, foil pattern has been modified for the following change: At the collector of Q1, install two germanium diodes with the band towards the collector of Q1 (1N34 or 1N60). Jumper one diode to pins 4 and 6 of IC2a. This gives a 5 second tail after each ID. Jumper the other diode to the collector of Q4 on the MLB, which is the PTT output.

MLB

Pads have been added to the 7413 Schmitt Trigger for the input-output connections.

Replace the jumper at IC2 from pin 4 to the collector of Q2 with a germanium diode, band towards Q2. A pad has been added at pin 6 for the jumper from the CW ID described above.

Receiver off timer, IC3, 555. On some negatives pins 6 and 7 are not connected. Solder bridge these pins for correct operation.

Same goes for the transistors on the MLB. Any NPN general purpose switching transistor may be used. Be certain that Q4 can sink the required current from the keying circuitry that follows.

The 100 Ohm resistor on the collector of Q3 may be increased to 150 Ohms.

The resistor value in the schematic, 2.2 megohms, at pins 6 and 7 of IC3, 555, is the correct value, although 1.5 meg is shown in the parts layout.

Pads have been added for the 1.8k resistor at the base of Q5, the autopatch control transistor.

Due to increased costs of materials (mainly film), after November 1st negatives will be $.75 each. Preprogrammed 8223 IC available. Your chip and $4.00 plus message desired; or $7.00 and message desired, I supply IC. Etched and drilled boards on G-10 glass epoxy also available. $7.00 each or both for $12.00 (limited supply). Approximately two weeks delivery.

Geoffry W. Kufchak WA1UFE
15 Fourth Ave.
Westover AFB MA 01022

OBSESSED

I read those gripes in your mail about small computers in your mag. I hope you don't give in. A couple of years ago when I saw articles about them in the popular mags, I brushed over them thinking they were just toys — like imitations of the *real thing* (which of course no one but a genius could understand).

This is my tenth month of intensive concentration on them. I became involved because I wanted to translate commodity market prices coming in on a telegraph line into price display and possibly charts so I could trade them without losing so much money.

I'm building a home brew affair with Altair compatibility.

Knowing I would need a display, the "Sol" terminal seemed like just

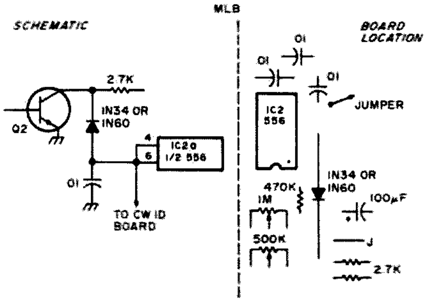

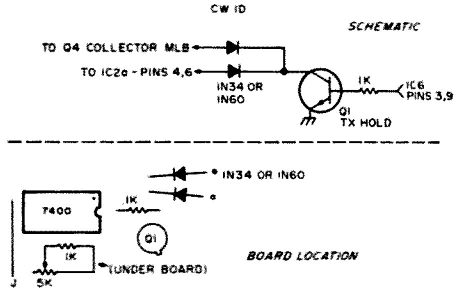

the thing (Processor Technology). Maybe I could use it to translate the special hex code into ASCII as well, so I ordered a circuit board and spent a week locating and sending for all the other stuff only to find out they are redesigning it and I won't get the board 'til September. It's a good thing I haven't started on the CPU board, because *now* I'm going to *have* to get a Zilogue board instead.

In other words, the information explosion has gotten me. Not only do I have a busted bladder, but bleary eyes from reading all that fine print in spec manuals trying to learn enough so the thing will be sure to work when I get it finished. (Could it ever be?)

You guessed it. I'm obsessed with computers, day and night. Even though my puttering goes back to the oatmeal box tuning coil and the 01A tube, nothing has bitten me quite as badly as the computer bug. So keep up the good work — no construction articles with lines running off the page to something or other. If we don't actually see it hooked to something, how can we be *sure* where it goes?

Out here, we appreciate what you're doing, so keep up the good work.

"Brad" Bradford
East Braintree MA

I get into enough trouble without your encouragement. — Wayne.

OFF BASE

We've been licensed for over 56 years. Were on a little before that, before licensing was required by Herb Hoover, who first took charge. Came on first on 300 meters with spark, then 200 meters, then 1750-2000, then 1800 to 2000 and the rest of the bands.

When *73* first came into business, we were one of your first subscribers, and also wrote you a few articles. Boy, how the years do fly!

Quit *QST* years ago — no longer a *real* ham organ as it was when "Hiram" ran it (and later his immediate successors). Present boys are more for business interests than hams. Hams play 2nd fiddle! Buy *QST* now and then to see if it's any better, but no! HI!

Wrote an article a couple of years ago pointing up how a few manufacturers such as Millen will sell direct to hams to promote building (I'm a builder — always was). In it I criticized those manufacturers who make components and also equipment for making components hard for hams to get — so as to force purchase of equipment. I compliment Millen and others who either sell direct to hams or *promote* components to distributors (instead of blocking distributors), etc., etc.

QST refused to print it. It would have helped hams who build, but *QST* was more concerned about their "big boy" advertisers!

Just thought you might like the above facts for what they are worth.

Jim Grindle W9QS
Chesterton IN

Jim, I wouldn't have published your letter either, and not for fear of any advertisers . . . but because I think you are off base. Distributors got out of the parts business because it was not profitable . . . pure and simple. One result of the incentive licensing (proposed by ARRL/QST in 1963) was that not only did ham growth stop and over 75% of the sale of equipment stop for several years, but hams stopped building, too. It got so Lafayette was the only place you could buy parts as several hundred distributors gave up the ghost. Parts houses are back in force now, but are more specialized . . . Godbout, James, SD Sales, Optoelectronics, Bullet, Verada, Poly Paks, Meshna, Tri-Tek, Whitehouse . . . etc. — Wayne.

THE NOVICE CLASS

I subscribe to both *73* and *QST*, but find your magazine to be the best. Certainly I tend to agree with your political outlook as regards amateur radio more often than I do that of the ARRL.

I am a new amateur, but with a long time interest in the hobby. I tried once before about twelve or fourteen years ago to get a license but was unsuccessful. Now I am the proud holder of a new Novice ticket. This leads me to write the following comment about the Novice class.

One of the reasons that I didn't get the license earlier was that I wished to skip the restrictions placed upon the Novice (and CW) and go directly to the General class, but I was a fairly young and inexperienced child at the time and found everything involved just too frustrating and just let the whole thing drop. If I had gone for the Novice ticket, I could have been on the air and gathering experience, instead of being just more and more turned off by the whole thing.

In the Novice class that I attended I found the same thing to be still true. There was one small boy (how come there aren't more small girls? — but that's another problem) who was having a lot of difficulty. He could have been coached and hand-held through a Novice exam, but I am not so sure that he could have been coached enough to pass a more advanced test. I know that there are very young children who manage to pass Extra exams, but I am concerned with the average child. For these children the Novice license is ideal, and I think that it should be retained. I am glad to see that the FCC is making steps in the direction of a renewable license in this class.

I took the Novice test because I wanted to be able to operate while I was studying for the General (Advanced really, but I am trying not to give into *hubris*). I would have taken the Technician, but six months ago there were no high frequency privileges for this class. For older, more advanced individuals, this seems to me to be a better entry class.

There are many problems with getting started in amateur radio, and if we want the hobby to grow we should systematically consider them along with possible solutions. I just wanted to air my thoughts on this one aspect of the problem. I am a professional educator and the learning aspects of amateur radio are thus close to my heart.

John Thomas Berry WN6NZW
Pasadena CA

OFF TRACK

Shortly after assembling my SB-401 two years ago, the transmit-receive relay began to stick, especially after lengthy transmissions or extended tune-up periods. Measuring voltage across RL2 revealed that voltage was indeed dropping, yet the relay just wouldn't quit. Popping the function switch to spot would restore normal operation, and running the companion SB-200 seemed to reduce the problem almost completely.

It wasn't until recently that the sticky relay problem finally prompted some real action. A local Novice bought the SB-401 and, after operating CW for a while, aggravated the situation so that the relay wouldn't respond to the old spot trick. Replace the relay was one answer, since it seemed like the problem could be residual magnetism.

A call to Heath showed how far off the track we were. Dave Poplewski knew immediately what we were up against . . . and answered that there were two ways to solve the problem (an expensive one and a cheap one). Needless to say, we were most interested in the cheap way out. Dave explained that the problem was soft finals — finals that were not soft enough to affect output, but soft enough to allow screen grid leakage through RL1 back to RL2. The best cure, Dave advised, was to ground lug 7 of RL1. That way screen grid leakage can't reach the transmit-receive relay, RL2. The expensive cure? Replace the finals.

Warren Elly WA1GUD/1
Bennington NH

One other cure — learn how to tune your rig.

I/O RIP-OFF

Please publish the following letter in an attempt to recover a stolen computer system from my home on or about the fourth of September of this year.

The equipment taken is listed as follows: (1) 1 Altair 8800 consisting of (a) 1 CPU card, (b) 6 88-4MCD dynamic memory cards, (c) 1 16K static memory card (Mikra-D), (d) 1 88-DCDD disc controller card set (2 cards), (e) 2 88-disc floppy disc drives, (f) 1 88-PMC PROM memory card with PROM, (g) 1 88-ACR cassette interface, (h) 1 88-2SIO serial interface with both ports; (2) 1 HP-65 programmable calculator; (3) camera equipment consisting of (a) 1 Honeywell Pentax Spotmatic II with 1.4 lens, (b) 1 Vivatar 85-205 mm autozoom lens, (c) 1 Honeywell 450 autostrobonar flash.

If anyone reading this letter has a reason to believe he has been offered any of this equipment or thinks he has seen this equipment, please contact your local police authorities or contact me at the following address.

John W. Swain
3687 N. East County Line Road
Indianapolis IN 46236
(317)-894-7271

You waited too long to write your house security program.

CATCHING ON

Your magazine and the articles in it have shown me the close relationship hams have with each other and this is what encouraged me more than anything else to work for my amateur ticket. Some of your articles are still a little deep for my shallow mind, but I'm catching on. Keep up the good work — you have a fine magazine.

Bill Raney WN5TGS
Laredo TX

THE GENERAL GOOD

This hint has saved me a lot of bother, and you might find it worth passing on for the general good:

You have finally decided that the antenna halliards must be replaced before they fall apart, and you have a length of fine new rope for the job. But how to get it through that pulley at the top of the tower? The sheave won't pass a knot, or even a splice. So you climb the tower, or lower it to the ground. Neither one!

Take a four inch length of coax, RG 58/U for small rope, or RG 8/U for thicker stuff. Cut off and discard all but the braid. Insert one end of the old rope into one end of the braid, and an end of the new one into the other. Pull taut, and the harder you pull, the firmer the grip of the braid on the rope ends. It may be necessary to wrap a few turns of thread around the leading end of the braid to control fraying. Pull down the free end of the old rope and let the new one follow it through the sheave and back to

Continued on page 25

New Products

EICO DLP-6

If you've been working with digital logic circuits, you've probably already discovered that there's no really simple way to debug them. At first glance, this may seem surprising. One of the nice features of logic is that you don't generally know or care what the exact voltage level at a test point is . . . only if it's high or low, a logic 1 or 0. As a matter of fact, a cheap VOM is quite adequate for static logic, and a dc scope is even better. Since the voltages aren't important, a circuit using an LED which lights for a 1, and is unlit for a zero, is great, and for $20 to $200, depending on your tastes and budget, you can buy one of several clip-on probes that will display the logic level on each pin of a 14- or 16-pin DIP. The better ones don't even need power - they locate and draw from the supply pins of the IC itself.

The problem is that most of the interesting logic circuits aren't static — there are all kinds of pulses flying around, and it's usually these pulses that are the important factors. Worse yet, they don't always come at regular time intervals, so you can't sync them in on an inexpensive, repetitive-trace scope. Even if you could, you may not be able to see them. TTL logic can respond to pulses that can't be seen on any but the fastest scopes. One trick I've seen is to use a triggered sweep scope, with the threshold set so it normally doesn't sweep. When you get a sweep, you still can't see the pulse, but you know something pulled the trigger (of course, it could have been your wife's hair dryer). Aside from the obvious overkill of using a $3000 scope to check out a handful of 20¢ gates, this method is not too satisfactory. The setting of the threshold is tricky, especially if there are other pulses around, and you still never see that pulse.

Straight LED indicators are no better. While the response time of an LED is very fast, that of your eyeball isn't. As it turns out, the human eye can see surprisingly short pulses of light, under the right conditions, but it has a long retention time. This means that in a darkroom, you *may* see that LED flash on; you'll never see a lit LED flash *off*.

It looks like what this country needs is a good $20 logic probe that can see pulses of either polarity, as well as static levels, and display the situation to you in a way that can't be misunderstood. The Eico DLP-6 is an LED probe that fills the bill. The key feature is a pulse-stretcher that detects positive- or negative-going pulses as short as 50 ns, and gives you about a half-second flash on a pulse LED. In this respect it's similar to Ted Lincoln's circuit (*73*, Aug. 76, pg. 106). It also has LEDs for both high and low static levels, which permit a feature I haven't seen before — it can tell the difference between an active high or low, and an open circuit. This can be really useful. As a final touch, the three LEDs are different colors (red, green and yellow), so unless you're color blind, it's pretty hard not to get the message.

The DLP-6 comes in a bubble pack, complete with a small plastic carrying case. All parts mount on a narrow PC board, which slips inside the body of the probe. Assembly is quite straightforward and takes about an hour. The instructions are no Heathkit manual, and there's one error in one of the figures, but in general everything went together as intended. Eico says to use the green LED for the "high" indicator, and red for "low." This seemed backwards to me, so I reversed them. The LEDs seem to be interchangeable, so use your own color scheme. If you make up your mind *before* soldering them in, you may not burn them up removing them as I did! (LEDs are more sensitive to heat than ICs, and these have to mount absolutely flush with the PC board or you won't be able to get it into the probe body. A power cord comes out the back of the probe, and is terminated with alligator clips. Yes, Virginia, the probe needs external power. You didn't think you were going to draw power from the chip with just the probe tip, did you?)

In operation, just connect the two alligator clips to any source of five volt power and ground, and you're ready to start probing. The three-color system is very easy to read, and after a little practice you can get quite a bit of information from those three lights.

Recently, I had occasion to use the DLP-6 to find a bug in my TVT-II. I had been trying for two days to find a missing pulse, before it slowly dawned on me that the pulse was so short I wouldn't be able to see it on my scope even when I "found" it. Using the DLP-6, it took about fifteen minutes to find a NAND gate with positive pulses in on all inputs, but no negative pulse out. Aha!

As a matter of background, the circuit used in the DLP-6 originally appeared in *Popular Electronics* (Richard P. May, March '74, pp. 33-35), along with a PC layout, so apparently both are in the public domain. Buy it or build it, but try it; you'll like it!

Dr. Jack W. Crenshaw
1409 Blevins Gap Rd.
Huntsville AL

THE KLM MULTI-2700 ALL MODE TRANSCEIVER

With interest in OSCAR mounting, and SSB activity up on 2 meter FM, it was inevitable that someone was going to come up with a do anything/everything transceiver. Now, KLM has. It's the new Multi-2700 . . . with OSCAR Mode A, upper and lower sideband, WBFM, NBFM, AM and CW all stuffed into one 28 lb. package.

When KLM introduced the Multi-2000 some years ago, it was in a class by itself. Then came Kenwood's TS-700A and the Yaesu FT-221, and the VHF sideband boom was on (commercially speaking). But no one offered the best of both worlds . . . it was either a synthesizer or VFO . . . no combinations. OSCAR work still required a separate receiver and transmitter, but SSB activity on the satellite sure came up.

The next step was to put it all in one package. With Mode A in mind, KLM's idea was to synchronize 29 MHz receive with 145 MHz transmit, while maintaining a constant 116.45 MHz difference between them. Using the synthesizer and VFO you can work through the satellite or monitor beacon signals at the flick of a switch. Because the Multi is a transceiver, however, the big difference between normal OSCAR operation and using the 2700 is that you can't monitor your relayed signals from the satellite. One then has to rely on the beacon signal (received separately on the synthesizer). As long as you can hear the beacon, you can work the satellite. KLM has left room for Mode B work, with a 450 MHz converter coming to fit into internal terminals. (50 MHz converters are also planned.)

The Multi-2700, in a word, is loaded. There's an 8 pole SSB filter, two FM filters, VXO and RIT, LED readout on the synthesizer, audio speech compression, ac/dc power supply, separate output and deviation meters and VOX. The VFO setup features a 5 to 1 tuning ratio, with the inside knob going 20 kHz per revolution and the outer knob going 100 kHz.

All that costs money, of course, and the Multi's price tag reflects it. But at $799.95 KLM's newest is not out of the price class for all-mode VHF gear. At that rate the OSCAR capability, hear your own signals through the satellite or not, is a bonus.

Operating the 2700 is pretty simple, and with only a vertical both SSB stations and repeaters could be worked quite adequately. Working OSCAR, however, takes a bit more practice with the VFO and synthesizer. Availability may be an initial problem; as we go to press only 25 units have reached the states, but a KLM spokesman says production should be up substantially by the time you read this.

A clean layout — with VOX, AGC and gain controls accessible through top port.

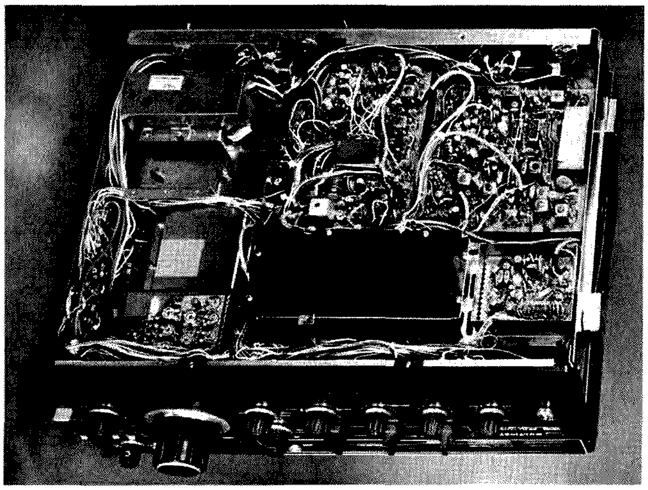

The "guts" view – note 29 MHz receiver, upper left, and space for plug-in 450 MHz unit below.

NEW 1977 RADIO SHACK CATALOG No. 276 NOW AVAILABLE

Radio Shack's new 1977 Electronics Catalog, featuring its exclusive line of products for home entertainment, hobbyists, CBers and experimenters, is now available from Radio Shack stores and dealers, nationwide.

The all-new 164-page catalog includes 100 full-color pages describing the company's complete line of products. Prices in the new catalog, which marks Radio Shack's 56th year in business, are reported to be, on the average, within 1% of the company's average 1975 prices.

Among the new items introduced in the catalog are: eight new stereo FM/AM receivers, led off by the Realistic STA-2000 75 Watt per channel receiver, the Optimus T-100 Tower speaker system, the new LAB-300 turntable and several new stereo tape cassette recorders.

Radio Shack is also introducing an all-new line of pocket calculators ranging in price from $10.95 for a 5-function model, to $39.95 for a scientific slide-rule calculator.

Other items featured in the catalog include: Realistic-brand CB two-way radios, automotive tape players, portable radios and scanning monitors, Archer antennas, Micronta test instruments and ArcherKit and Science Fair electronic and hobby kits.

In addition, the new catalog lists hundreds of specialized electronics items, parts and accessories, tools, tubes, semiconductors, wire and cable, home security products, intercoms, microphones, timers, batteries and a complete library of Radio Shack's own books on electronics and related subjects.

The catalog also includes bonus coupons good for a 50% savings on the company's own Supertape and Realistic brands of tape, and a coupon worth $1.00 on the purchase of their $1.25 book, *All About CB Two-Way Radio.*

In announcing the new catalog, Radio Shack president Lewis Kornfeld stated: "That great old American institution, the Radio Shack catalog, has just been published again, entirely revised, available in all our stores, and still free! Free to you. To us it represents an investment over $3 million.

"The total printing comes to 2,132,000,000 pages," Kornfeld continued. "Stretched end to end: 1,777,777,777 linear feet or 336,700 miles, or 13.525347 times around the world at the equator. The new 1977 edition consumed 3787.5 tons of paper and 1,222,000 pounds of ink. These statistics are revealed to discourage our competition. And to give cheer to America's postmen who don't have to deliver the catalog since none are mailed – you'll have to get your copy at one of our stores."

NEW VIZ FREQUENCY COUNTER USES PRECISE CRYSTAL-CONTROLLED TIMEBASE FOR EXCEPTIONAL ACCURACY

VIZ Manufacturing Company has introduced a frequency counter to its growing line of test instruments. The WD-752A counter is designed for making frequency measurements between 10 Hz and 60 MHz in audio, video, CB, ham radio and other communications equipment.

A unique feature of the counter is its 1 kHz audible sidetone with separate on-off volume control. The 1 kHz tone is valuable in modulating single sideband transceivers for carrier frequency measurement. The counter has a selectable input sensitivity of either 10 or 100 mV; the lower sensitivity is valuable when considerable noise is present with the signal.

The counter uses a carefully selected 10.000 MHz crystal to create an extremely accurate timebase, ensuring the accuracy of the 10, 100 and 1000 millisecond gate signals and logic control. The measuring circuit is composed of a six-state IC counter which feeds into a very bright readout made up of six 0.3" seven-segment LEDs. The frequency, decimal point, and range (either MHz or kHz) are all displayed automatically. A signal lamp indicates when the signal is sufficiently strong to be counted and indicates when the higher sensitivity input is required. An overflow lamp indicates a signal that exceeds 1 MHz when using the 1 second fixed gate.

The BNC input is compatible with most standard broadband oscilloscope probes. When making measurements of transmitter or transceiver AM frequencies, the counter is positioned near the transmitter and a one meter cable attached to the input serves as a pickup antenna. The counter can also be attached directly to a transmitter or transceiver with a directional coupler and dummy load.

The counter operates on 115 V ± 10 V, 50/60 Hz. The unit is extremely compact, measuring only 2-5/8" x 5-3/4" x 9-1/4", and weighs only 4 lbs. The dealer optional price is $255.00.

Further information on the WD-752A frequency counter is available from Bob Liska, VIZ Test Instruments Group. *VIZ Mfg. Co., 335 E. Price St., Philadelphia PA 19144, (215)-844-2626.*

NATIONAL'S NEW VOLTAGE REGULATOR HANDBOOK

It would be difficult to find a handier guide to voltage regulators than National Semiconductor's latest release. The handbook is chock-full of great circuits, theory and seemingly endless specs on not only National's line, but comparison data on the competition as well.

It truly is a handbook, since the opening pages cover power supply design basics, transformer specifications, rectifier circuits, filtering and load effects. But that's not all. Heat flow and thermal resistance theory get their due along with heat sink design and applications.

At $3 a shot (California residents add 6% sales tax) the *National Voltage Regulator Handbook* is a heck of a value. Send your check to National Semiconductor Corp., Marketing Services Department, 2900 Semiconductor Drive, Santa Clara CA 95051.

Warren Elly WA1GUD/1
Bennington NH

THE SENCORE F-14 FIELD EFFECT METER

Like most hams interested in construction and troubleshooting, I have become accustomed to having two types of meters to fill my needs. A 20k Ohm VOM was used for portability, general testing and, most essentially, for current measurements. A VTVM was also a must for high impedance voltages, and with an accessory probe for rf measurements. Redundancy was unavoidable since both types of meters offer duplicate capabilities in some respects, while each possesses its own uniquely desirable features.

A recent drive to improve the station test facilities, and a searching review of the latest products, led to the acquisition of the Sencore F-14 Field Effect Meter, which succeeds in obsoleting both of my original meters.

Of particular interest to hams is the fact that the F-14 packs all the desirable features of a VOM and VTVM into a single unit. Field effect transistors replace the functions of the traditional vacuum tubes, providing better characteristics than the VTVM, without the need for ac line power. And, in addition to 7 ranges of ac/dc volts and 5 resistance ranges, the F-14 also measures dc current in 5 ranges from 100 uA to 1 A full scale.

Special features include: very high input impedance; 15 megohms shunted by 14 pF on dc volts; 10 megohms shunted by 29 pF on ac volts. Ac volts provides a broad bandwidth from 10 Hz to 10 MHz at 3 dB points without an accessory probe. The meter face includes scales for ac peak to peak voltages, a zero centered, plus and minus volts for servicing contemporary solid state circuitry, and a mirrored strip for optimum readout accuracy. Positive meter overload and FET circuit protection is incorporated to guard against incorrect voltage application.

The F-14 instruction manual includes construction details for some simple adapters to further increase the flexibility of the unit, such as a plug-in shunt to extend dc current measurements to 10 A, a switchable shunt for ac current ranges of 1, 3 and 10 A, and the accurate measurement of very small dc currents encountered in transistor, diode and capacitor leakage, in the order of nanoamps (0.001 uA).

This little gem weighs in at less than 3½ lbs. with batteries, and occupies about half the cubic space of the average VTVM, with a large 4½" x 3" meter face. The rugged all steel case is vinyl covered for an added appearance touch, and practical protection. Batteries required are standard types available at any drugstore or supermarket.

On the bench, in mobile or portable applications, anywhere you need to use it, the F-14 is instantly ready at a flick of the switch, with no warm-up period for stabilization. Oh, yes! I found some industrial type solid state meters in the catalogs offering similar capabilities – at about twice the price of the F-14.

General Description

Meter: 4½", 100 uA, ±2%, diode protected and isolated from input.
Multiplier Resistors: 1% precision type.
Ohms Battery: 1.5 V "C" cell, Eveready type 1035 or equiv.
Power Supply Battery: 9 volt, Eveready type 222 or equiv.
Weight (less batteries): 3¼ lbs.
Dimensions: 5" W x 7-3/16" H x 3-1/16" D.

Peter A. Lovelock W6AJZ
Santa Monica CA

The increased population of amateur repeaters and the resulting interference has forced many repeaters to use tone access systems. The tone burst system is irritating to users, and if a station drops out after accessing the system, there is no way for the system to be reaccessed until the next transmission. These factors led to the unit described in this article. The cost of reeds for a reed encoder is prohibitive for most amateurs ($15 for a new reed plus another $15 for the encoder), while this complete circuit can be constructed for approximately $10.

Circuit Description

The unit (see Fig. 1) is a simple crystal controlled oscillator[1] driving a CMOS

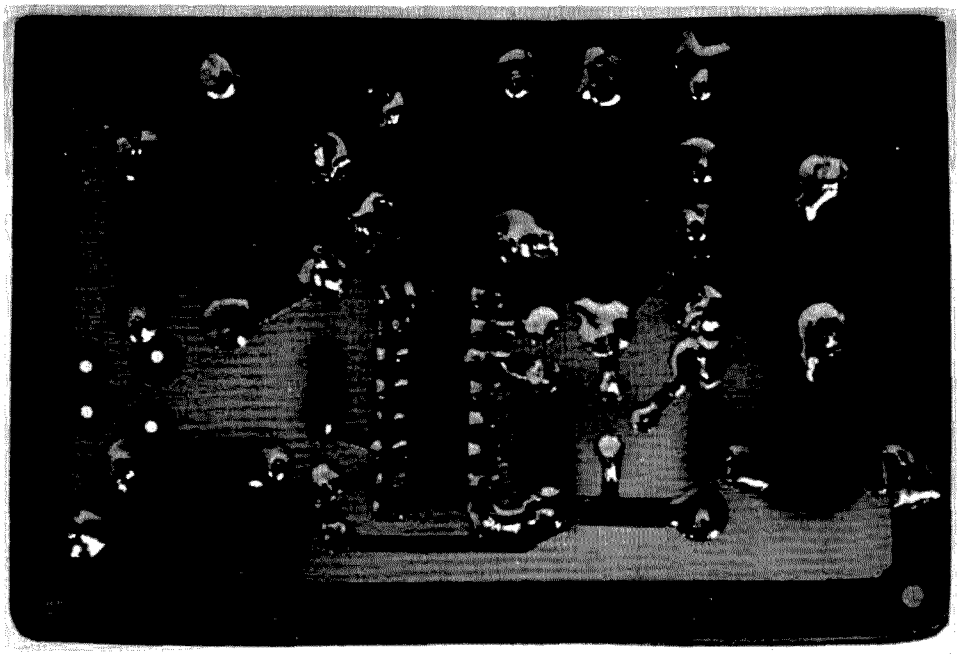

PC board.

Go Tone for Ten

-- simple subaudible encoder

Carson Haines Jr. WB6GON
3112 Sylvan Ave.
Oakland CA 94602

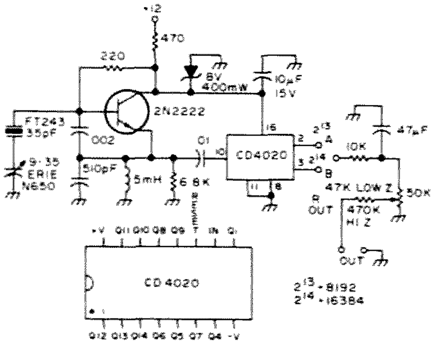

Fig. 1. Subaudible tone encoder.

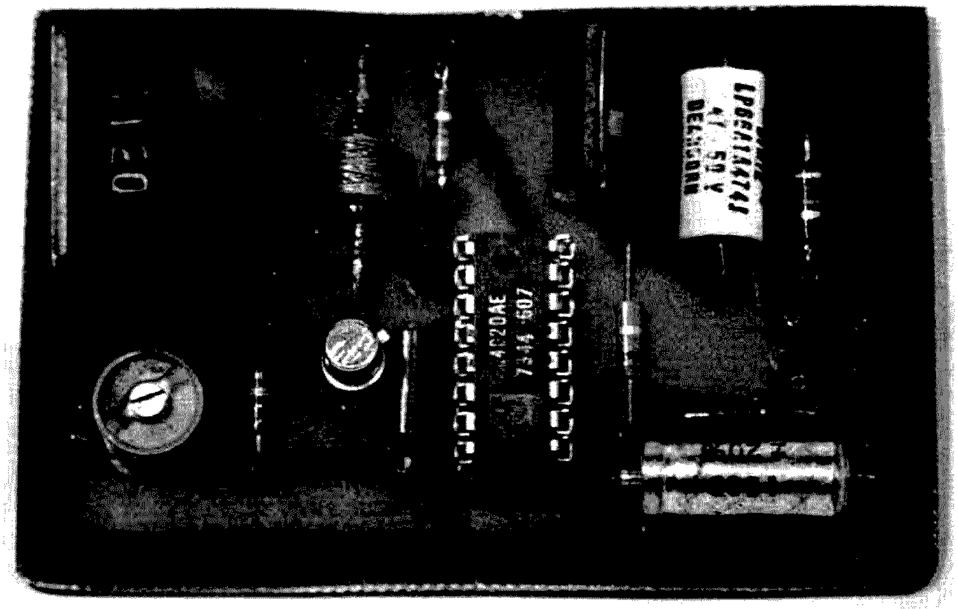

Component layout.

divider with an RC filter on the output. The CMOS divider was selected so the number of components could be reduced from four 7490s and a precision voltage regulator to one CMOS divider with a simple zener voltage regulator.

In the units constructed, FT243 crystals were used. To calculate the frequency of the crystals, see the sample below:

Required Frequency x Divide Ratio = Crystal Frequency
Example: 136.5 Hz x 8192 = 1.182 MHz

There are two divide ratios on the board, 8192 and 16384. If other frequency range crystals are available, simply bring out the required divide ratio from the IC and feed it into the filter. The crystals used in the original units were the least expensive crystals Jan Crystals had listed in their catalog. Pick a crystal frequency as close to the calculated value as possible. In our units for 136.5 Hz the closest crystal was 1120 kHz. This yielded an error of .2 Hz when the dividing was completed, and normal reed decoders are approximately ±1 Hz wide minimum. When selecting a crystal, try to keep the end error to approximately .5 Hz and you should not experience any problems. The oscillator is very broad band and crystals from around 100 kHz to 3 MHz should perform fine.

The dividing is done by a CMOS divider and it is available from Godbout Electronics. The CD 4020 has divide ratios of 2 through 2^{14} (16384) available and if other ranges of crystal oscillator frequency are used, it is possible to pick the divide ratio you require.

The output circuit is a simple RC filter[2] which takes the square waves on the output and makes them into a triangular waveform. The potentiometer in the output is used to set the output level, and the resistor value for the series resistor should be selected for the impedance into which you are inserting tone.

Construction

The unit can be constructed using any means available. The original units were constructed on PC boards and a full size layout is included (Fig. 2). Parts value is not critical, so select parts you have on hand that are near to the values listed on the schematic. The zener can be between 6 and 9 volts since the CD 4020 will run on any voltage between 5 and 15 volts.

Operation

Connect the unit to a source of 12 volts that is turned on when the transmitter comes on or let the unit run all the time (only 10 mA is required). Connect the audio and you are ready to go.

I will be happy to answer any questions you may have regarding this unit, but please SASE or no answer. ■

References

[1] *Ham Radio*, June, 1972, page 11, "Five Band Communications Receiver," M. A. Chapman K6SDX.

[2] *73 Magazine*, April, 1974, "Rock Solid Subaudible Tone Generator," Paul H. Wiese WA8YDC.

Parts Available From

Jan Crystals
2400 Crystal Drive
Ft. Myers FL 33901

Godbout Electronics
Box 2355
Oakland Airport CA 94614

Fig. 2. Layout (bottom view) for subaudible tone encoder.

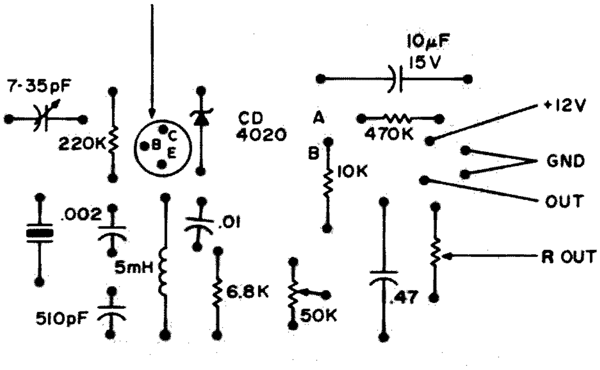

BOTTOM VIEW

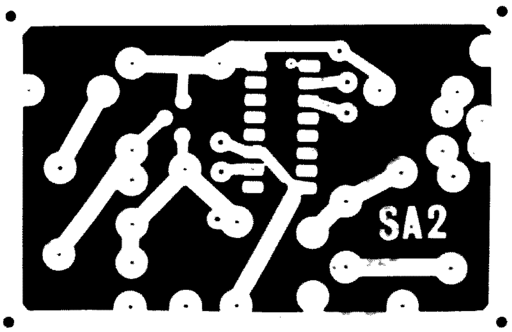

LETTERS

from page 19

ground. The braid runs freely through the sheave and the job is done.

L. Colin Curtis VE7BMK
Kamloops, B.C.

You kind of coax the rope through the pulley, eh?

ADAPT OR PERISH

In your I/O editorial in the Oct. 76 issue of *73*, you wanted reader response to the content of *73*. Here's my 2 cents!

I have at one time or another subscribed to just about every ham magazine (yes, even *QST*). I presently subscribe to *73* and *Ham Radio*.

I have heard some OTs say that hams don't build anymore. They're wrong! There is more building going on now than ever before in ham history. True, we don't build receivers and transmitters like our grandfathers did, but then why should we? We can buy an excellent transceiver for a price for which it couldn't be built. It's downright stupid to build a receiver for $200 when you can buy it for $100. But I'm getting off the track. Suffice it to say that *73* is geared toward the builder. *QST* is not. I believe that *QST* is trying to please every ham all the time. If you want to read 16 pages of contest results, then by all means subscribe to *QST*. *Ham Radio*, on the other hand is an excellent magazine for the builder. But, and a big but, *HR* is not geared toward the average ham. The steelworker or autoworker who puts in a hard 8 every day doesn't have time or patience to get into anything too deeply. If I have some knowledge on a topic, I can usually follow an *HR* article. But when I'm completely ignorant about something, I look it up in *73*. That about says it.

A few words about the I/O section of *73*:

I think along with myself, most experimenters are baffled by all the I/O articles and ads. There's a lot of stuff for sale, but we don't know what to do with it.

At first, my opinion was that I/O material didn't belong in a ham radio magazine. Maybe it does or doesn't, but let's go back about 6 years ago. Back in 1970, something called TTL ICs were being advertised here and there in all the mags. We wondered what they were good for and why computer surplus should be in a ham magazine in the first place. Well, here we are just six years later and we can't live without the damn things. ICs do things cheaper, quicker and easier than any other means. They do things that couldn't practically be done any other way. Sure, I struggled for a few years buying ICs I didn't need, making mistakes (I still make them, but not as often), and building projects that never worked. We all have.

The point is this: Right now, I can't see a microprocessor in my future, but six years ago I didn't see why anyone needed a frequency counter. Boy, how wrong we can be. Wayne, I want you to know that even though I have been in electronics for 15 years, I am struggling through the I/O articles. I have to read them 2 or 3 times and they still don't make sense to me sometimes. I'm learning, not much, and not fast, but I'm learning. Keep cramming that stuff down our throats whether we say we like it or not. If you don't, who will? Certainly not *QST*. *HR* is already over most of us. Don't give us a magazine full of CB construction projects, because six years from now we'll wake up and find that the world has passed us by. I don't understand most of the I/O articles, but someday I will. At one time I didn't know the code. Now I do. That's life. To survive you have to adapt or you perish. I'll bet my grandfather had just as much trouble understanding a crystal detector as I have understanding a PROM. It didn't stop him and it won't stop me. Keep printing the I/O stuff and I'll keep struggling with it. Stop printing it and we'll all be crushed in modern technology.

Paul J. Dujmich WA3TLD
McKeesport PA

Ok, ok — I'll print it, I'll print it. — Wayne.

NOT PROPER

Several recent events have prompted me to write this letter. It concerns operation on two repeaters in Dallas on 147.36 and 147.39. Some of the operation I have witnessed on these two frequencies I do not believe to be in the spirit of amateur radio, and responsible operators in the Dallas area need to take note.

The repeater on 147.36 is listed in repeater directories as OPEN. Several of the group's members have personally told me that it was OPEN. Recently, as I was calling a friend of mine on .36 (my friend is a member of the group), I was asked to leave the frequency at once by a ham who heard my call. He said that he personally did not like me (I do not even know the man), and that anyone with intelligence knew that the repeater was CLOSED.

The repeater on 147.39 is a closed, private repeater. This group seems to be unable to tactfully get that point across. When I first got my synthesized rig, I did not realize that closed repeaters existed. I keyed up on .39, gave my call, and asked if anyone were around. My call was answered by a ham who said that it was a closed repeater and that outsiders were not allowed on frequency.

I believe that such operation is not proper in amateur radio, and that it can be greatly detrimental to our hobby. Hams who are concerned about keeping amateur radio as it was meant to be, should take a close look at these problems and others like them.

Blaine Hamrick WB5LSJ/WR5AKL
DFW Airport TX

NASTY WARNING

Regarding the interesting article "Have You Used a Triac Yet?" published in *73 Magazine* for October 1976 at page 76: I think a warning might be in order.

If a high voltage transformer were used as shown on page 77 with the resistor/capacitor across the triac, a person believing the triac "relay" to be open, and working on the power supply, might get a nasty shock, especially if the capacitor were larger than that shown.

I continue to enjoy *73* very much — keep up the good work.

Bill Allen W1LU
Providence RI

A little shock might be good for some of these five volt TTL kids.

COMM-ED

I noted the comments about Trigger Electronics. Let us not forget another company known as Dycomm, or Dynamic Communications, Inc. of Florida.

More than two years ago, after a phone conversation with Jim Penny, I ordered a front end crystal filter for my 81-21 repeater in Whitmore Lake. Upon arrival, I was astounded at its physical construction, being in a non-rf-tight minibox. Checks using professional Hewlett-Packard and Singer test equipment showed that it did not provide the 5 dB gain and sharp selectivity claimed, but in fact provided considerable loss with multiple response (passed more than one frequency). So much for $75. I sent the unit back and asked for one that worked or a refund. Months went by and no answer; finally, another phone call, and I explained the problem. Still no refund or unit. Now, more than two years has passed, and I have never received the unit or a refund. Insomuch as the repeater was moved to a nearby town and the equipment has changed, I have no need for a new unit. But my creditors sure could use the $75!

I also had a lot of problems with the various amplifiers they sold, too!

Henry Ruh WB8HEE
Whitmore Lake MI

MORE 20777

After reading "Belt Tightening" by Donald Chester K4KYV/1 in the July issue of *73*, I agree very much with him regarding AM and NBFM usage. These are about the cheapest means a ham has at his disposition to get on the air on voice on HF. Let us keep in mind that not all of us can afford to throw $600 on an SSB set. Besides, quite a number of foreign hams still use AM phone.

On one point I heartily agree with Docket 20777. I'd love to have back A-2, T-5, MCW on the HF bands.

Benjamin Lamboy KP4CA
San Juan, P.R.

ANGER TRIGGERED

Just a word of sympathy for Horace WA4CUD and Larry WA4MJA, along with the many others "shot down" by "the Trigger man."

It seems to me we can do nothing with this company as individuals. Perhaps you, or some of our "ham" friends, could come up with something we could do collectively. This company is "in to me" to the tune of $80, and I do not like the music they play.

Have tried the BBB (no luck), and am going to the Attorney General of New Mexico. Also have a file with the U.S. Postal Service.

Any other ideas would be appreciated. This company must be stopped.

Raymond E. Boshart WB5ROP
Box 1041 (712½ Ivy)
Truth or Consequences NM 87901

Trigger may soon be sent out to pasture — or else stuffed and mounted.

LEARNING A LOT

Just a short note to encourage you to keep printing everything about computers you can get your mitts on in *73*. At first it was all a mystery to me and I wondered what I was getting in my magazine, but once again (last time was 2 FM) I trusted you and, as a

direct result of *73*, I now eat, sleep and breathe computers. I am slowly stashing pennies, but it will be at least a year before I can assemble a system so I will have to read, learn and dream in the meantime. Please send me a year's subscription to *Kilobyte* and bill me before I change my mind. I am sure most of it will be above me, but like *73*, when my interests change or I become more knowledgeable, I would like to have the back issues to look through. I am in the electronic security business and will have a few articles forthcoming soon. I wish I could trade alarm stuff for computer stuff. Guess I'll have to use the money substitute being eroded by the government in the meantime — convert my alarm talent into a fascimile of a federal reserve note and later swap the note to someone for computer stuff. The government is trying to protect too many people. I'm tired of them trying to protect me. I have been buying kerosene in plastic storage bottles (government issue) for many years. Now it is illegal for me to purchase or store it in anything except metal. The government is protecting me.

Another subject . . . The secrecy of communications act. Several of my customers have silent holdup alarms in stores, banks, etc. These alarms call the police silently when they have a problem. Last week two of these alarms were tripped. I heard the call on the police monitor. Within 5 minutes my customer was on the phone wanting to know why the local newspaper had called wanting to know if they had been held up. This seems to me to be in violation of the act. My customer's life would have been in jeopardy if there was in fact a holdup taking place when the newspaper called. If the holdup man had answered the phone, I probably would have lost a customer and friend. The paper's employees sink hundreds of dollars into police monitoring equipment in their offices and cars to assure that they will be instantly aware of crimes and traffic accidents that are happening and be able to rush a photographer and reporter out. Nuff said. Thanks, Wayne; I'm really learning a lot from *73*. It's almost like an inexpensive and highly entertaining college course. Especially liked the articles about BASIC in the October (!) issue. All the I/O editors are great. If I can help in any way please feel free as always . . .

Steve Uhrig WA3SWS
Ellicott City MD

THE QRP CHAMP

K5JRN's QRP transmitter ("QRP Fun on 40 and 80," October '76) works like a champ. It was up and running into a random longwire two days after the magazine was received. My first home-built transmitter, 12 contacts so far in four days on mostly 80 meters . . . VA, DE, CT, and a 599 from MA. On 40, one contact in TN and IN albeit poor due to the frequency of 7148.5 fighting it out with Radio Moscow on 7150. I'm waiting for my General and I look forward to moving outside of the QRM-loaded Novice bands.

Thomas R. Sundstrom WB2AYA
Willingboro NJ

GOOD BUY!

Compliments. I have read many professional and hobby magazines, and I must admit *73* would be a great buy at twice the price. Each issue has lots of meat in it for many interests. Keep up the I/O section. I'm not into computers but I know I will be sometime in the future.

Kent H. Gibb VE6BAF
Edmonton, Alberta

Twice the price . . . hmmmm?

BEST IN THE WORLD?

My subject is Atlas Radio Company, headed up by Herb Johnson and his boys. I bought an Atlas 210X and had trouble with it; I sent it back and then it developed more troubles. One day I wrote a letter to Herb Johnson and explained the troubles. About two weeks later the UPS had a package for me from Atlas Radio. Yep, you guessed it; it was a brand new Atlas 210X, and as soon as I got the chance, I tried it out. It was hotter than a firecracker and some of the QSOs I had were as strong as a base station. You see, I am trying to get Bicentennial WAS from a car, and that is quite difficult with a wet noodle for an antenna and just 100 Watts output. I believe that there is not any other ham radio manufacturer who would do what Herb Johnson did, and I believe that Atlas Radio is the best ham radio company in the world.

Russell "Bud" Holderbaum, Jr.
W3AEZ/W4JIQ
Gaithersburg MD 20760

TRUTH OR CONSEQUENCES

Thanks for the latest *73* addition, the hard copy reader service card.

Keep up the IC projects. I built the HR-212 on page 66 of the May '76 *73* mag. The article says to scan 6 channels, but without any mods using 0 for 8, up to eight channels can be scanned. Also, by adding an AND gate, ten channels can be scanned. Works FB. Oh! By the way, would like to see a small article on how to make the HR-212 hang in there (delayed scan) on active channels. Also a source for printed circuits to be used with the articles!

I see for the last 2-3 months ads missing from Altaj Electronics, Dallas. I ordered their King clock and only after 4-5 weeks delay and two telephone calls, was able to get delivery. But since then, I have done business with them and have gotten prompt, courteous service. James Electronics is another story. They have *same day service*. So far I've placed 2 or 3 orders with them and have gotten them back (including postal time) within six days. FB!

How about mentioning the *Fox Tango Newsletter* put out by The International Fox Tango Club, Milton Lowens WA2AOQ/4, 248 Lake Dora Drive, W. Palm Beach, Fla. 33411 at S5 per year (10 issues). Its sole purpose is the exchange of info, mods, etc., for Yaesu owners — a terrific letter. Well, that's it for now.

Tom Gundlach WB5JDU
Truth or Consequences NM

MORE IN THE FUTURE

About your article "QRP Fun on 40 and 80" (Oct. 76) by Si Dunn K5JRN. GREAT! I thought that I had to buy all of the old radio mags to find this kind of make-use-of-your-junk-box gear. Hope to see more in the future. This type of article makes ham radio a challenge.

Terry D. Wright
WB8UPO/ADM8UPO
Piqua OH

MORE OF THE SAME

The article by Gabriel F. Gargiulo (October, pg. 128) was the best on programming in this issue, I thought. It was very clear and instructive. Also, your I/O editorial points out the computer's potential. Let's have more of the same.

Ken McGinnis
San Mateo CA 94401

PLAIN ENGLISH

I wish *73 Magazine* would (for once) show a construction article which was written in plain English! Terms like TTL, PLL, coil phasing (in one article it said "The coils must be properly phased so the circuit will oscillate," but never mentioned what phasing means or how to do it). ½λ, etc., etc., make the average Novice's (or at least my) head spin.

You should put one article in each month's issue designed especially for Novices (simple and educational). I, for one, would like to design my own circuits for different projects, but can't because of lack of knowledge. These articles would help people learn theory and at the same time show them some sort of practical use!

L and C circuits always give me trouble. Figuring the proper value of L and C for different frequencies is murder when you're only an 8th grader (soon to be 9th grader).

I hope other Novices who see this (if you print it) will support this idea or improve on it.

John Halliwell
Hampton TN

P.S. I have 5-9 weeks to go before I get my Novice license. I love your magazine. Keep it up.
P.P.S. I want to mention that Optoelectronics is a great dealer. Their service was fast and their electronic clocks work great!

TEST PILOTS ONLY

Nearly every issue contains subscription offers for expanding *73*. I would like to propose another way in which new blood can be brought into the fold. Why not have a WN section similar to the I/O section that will teach us neophytes the basics of building the kinds of ideas that the more advanced hams submit?

After people see that top-notch authors are penning stuff they can read, they'll run out and hopefully get a life's subscription.

I would also like to see an article to review 2 meter operations and a few on uP fundamentals.

James Wessels, Jr.
Louisville KY

Sure, James, I'd love to have more articles on fundamentals for Novices, but life subscriptions are going to be permitted only to amateurs over 73 years old who are full time test pilots. Some readers think we've already run enough 2m operations articles, but there sure is a thirst for uP material. — Wayne.

ANOTHER CHARTER

I was unable to give you my subscription to *Kilobyte* at the computer convention this past weekend.

After seeing how well you started *Byte Magazine* out, I am sure your latest venture will be as good or better.

Please accept my subscription to *Kilobyte* for a three year charter membership. Enclosed is my check for S25.00.

Carl G. von Loewenfeldt
Alexandria VA

KING AND QUEEN

Just a few lines to let you know that Lloyd Colvin W6KG and Iris Colvin W6DOD have returned to California, via Australia, Western Samoa, American Samoa and Hawaii, after a

Continued on page 39

Complete five band dual conversion amateur communications receiver.

I am sure many radio amateurs who have home brew rigs would love to have a matching receiver. Deciding to do something positive about this emptiness in the shack, I came up with a plan that made the home brew receiver not only a possibility, but a reality.

The plan centered on reducing the complexity and time of construction dramatically by using a drugstore transistor AM broadcast radio set as the main building block. Even if you never start to build this receiver, I am sure that you will find it comforting to know that if it ever became necessary, you could do it.

This receiver, being a dual conversion type, has two local oscillators (LO) and two intermediate frequency amplifiers (IF). In this circuit we have to make our own HF LO, while both IF amplifiers and the MF LO are parts of the AM broadcast set.

We also have to make six other circuits to support our BC set to make certain that our project winds up a real communication receiver. These are the HF radio frequency amplifier, 1 MHz amplifier, beat frequency oscillator (BFO), S-meter, crystal filter, and automatic noise limiter (ANL).

When all the circuits are working together, their operation is spectacular for such a simple design. When the rf gain control is two thirds up, a 0.2 microvolt 7.1 MHz signal at the antenna connector will read S9. The receiver noise is too low under these conditions for me to make a measurement with the simple equipment available to me.

All I can say about it is that I could hear only signal in the phones, and I just finished working F6ARC on 40 meters with no trouble at all. Any dual conversion birdies are less than S2 and located so they are no bother.

Drift and broadcast station feedthrough is nil. Each of the five bands can be selected by a front panel control and is 0.9 MHz wide. The 6 dB down bandwidth signal selectivity is 300 Hz with the phase control in the CW position, and 1.2 kHz in the SSB position. It is powered by a 9 V battery and the current drain is 30 mA.

World's Simplest Five Band Receiver?

-- using an AM transistor radio

Warner F. Stortz K3QKO
5122 Alberta Ave.
Baltimore MD 21236

Circuit Description

The transistor AM broadcast set just keeps on doing what it did before we bolted it to the front panel – changing .55 MHz to 1.6 MHz rf to sound at the speaker or phones – so there is no need to describe it any further. Fig. 1 shows how it works in our receiver and is supported by the outboard circuits. These will be described in

detail because each is unique in this receiver.

Starting from the antenna connector, Fig. 2, the bandswitch, S1, selects one of the rf transformers, T1-T5. They are broadband-tuned to the center of the desired frequency range. Therefore, all the signals in the frequency range selected appear at the gate of rf amplifier Q1. Here they are amplified as much as possible without adding noise to the output. By using a low noise MOSFET for this amplifier, the receiver signal-to-noise ratio is greatly improved.

To prove this point without a lot of rotten math, it is logical that if the rf signal is made greater, the following gain controls will have to be turned down to yield the same output that was present before amplification. If noise was not added in the amplifying process, all the frying sounds generated by these turned down stages will be much less.

The output of the rf amplifier is inductive coupled to the gate coil of the converter transformer, T6-T10, and selected by the bandswitch, which, also through other poles, applies this signal to gate 1 of the HF converter Q2 (along with the HF LO output to gate 2).

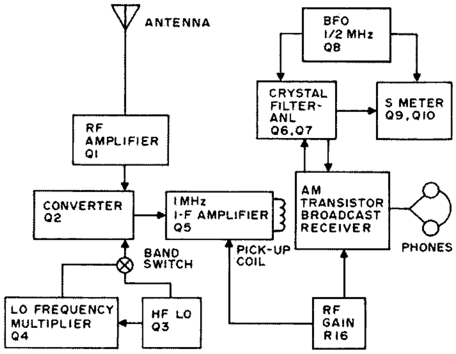

Fig. 1. Block diagram.

The HF LO is crystal controlled for stability and uses FT-243 type crystals. The 20 meter, WWV, and 15 meter bands are at a frequency higher than that at which these crystals will oscillate, so a multiplier is used to double or triple their fundamental output when the bandswitch is in these positions. This multiplier is a class C amplifier whose output is tuned to the selected frequency with rf chokes and fixed capacitors.

Now things really start to happen. While the converter Q2 is doing what is natural, its output is a real mess of signals, and we are only interested in the ones that are the difference between the LO and rf frequencies.

The unwanted signal that will cause the most harm is the very strong one at the LO frequency. If it gets into the BC set loop stick, overloading will take place and there will be birdies all over the bands. To stop this LO feedthrough, the converter output is filtered by using a well shielded oscillator coil, T11 (Fig. 3), removed from another BC set, and tuning it with a fixed capacitor to about 1 MHz.

Because of a long coaxial cable run to this improvised transformer, Z1 was fabricated to swamp any VHF parasitics that might develop. The base of the 1 MHz amplifier Q5 is connected to the pick-up coil in T11, resulting in a clean converted signal being amplified. It produces a strong field around rf choke L8, which is tuned to about 0.8 MHz with fixed capacitors.

This choke is mounted close to the BC receiver loop stick so its field will be picked up with little attenuation. Strong spurious signals (birdies) are unacceptable. Therefore, the importance of keeping the HF LO signal out of the BC set, and the BC LO signal out of the HF rf amplifier cannot be overemphasized. Most of the receiver shielding and parts placement was made to achieve this isolation.

The broadcast receiver is now able to tune and detect the different HF signals that have been converted to frequencies that are within its range. It is still not ready to be used for a reliable contact, because it needs at least a beat frequency oscillator and more selectivity.

The BFO is a series-tuned Colpitts type. It uses a transistor BC set IF transformer for the frequency controlling element and a front panel controlled capacitor to vary the pitch. Its output is taken from the small untuned winding in the IF transformer.

The receiver's fine selectivity is achieved by connecting a crystal filter between the collector of the BC set's first IF amplifier transistor and its output transformer. To implement this, the collector lead is disconnected from its original place, and reconnected through a coaxial cable to another identical IF transformer located on the ½ MHz crystal filter and ANL circuit board (Fig. 4).

This transformer, T12, provides the input for the FT-241 low frequency crystal Y6 and the 180 degree out-of-phase signal for the phase control C20. When C20 is critically adjusted from the front panel, stray signals shunted around Y6 are canceled and the filter output

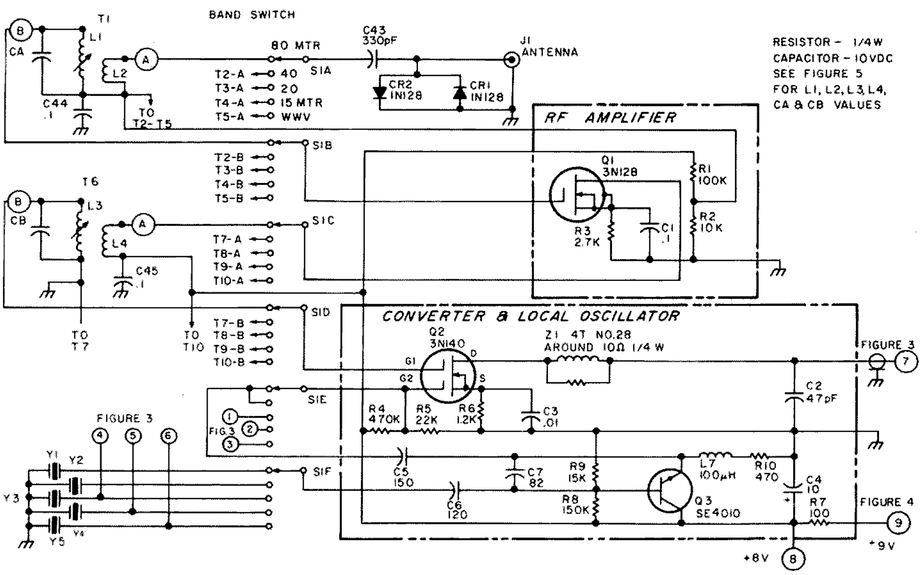

Fig. 2.

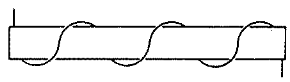

Fig. 3.

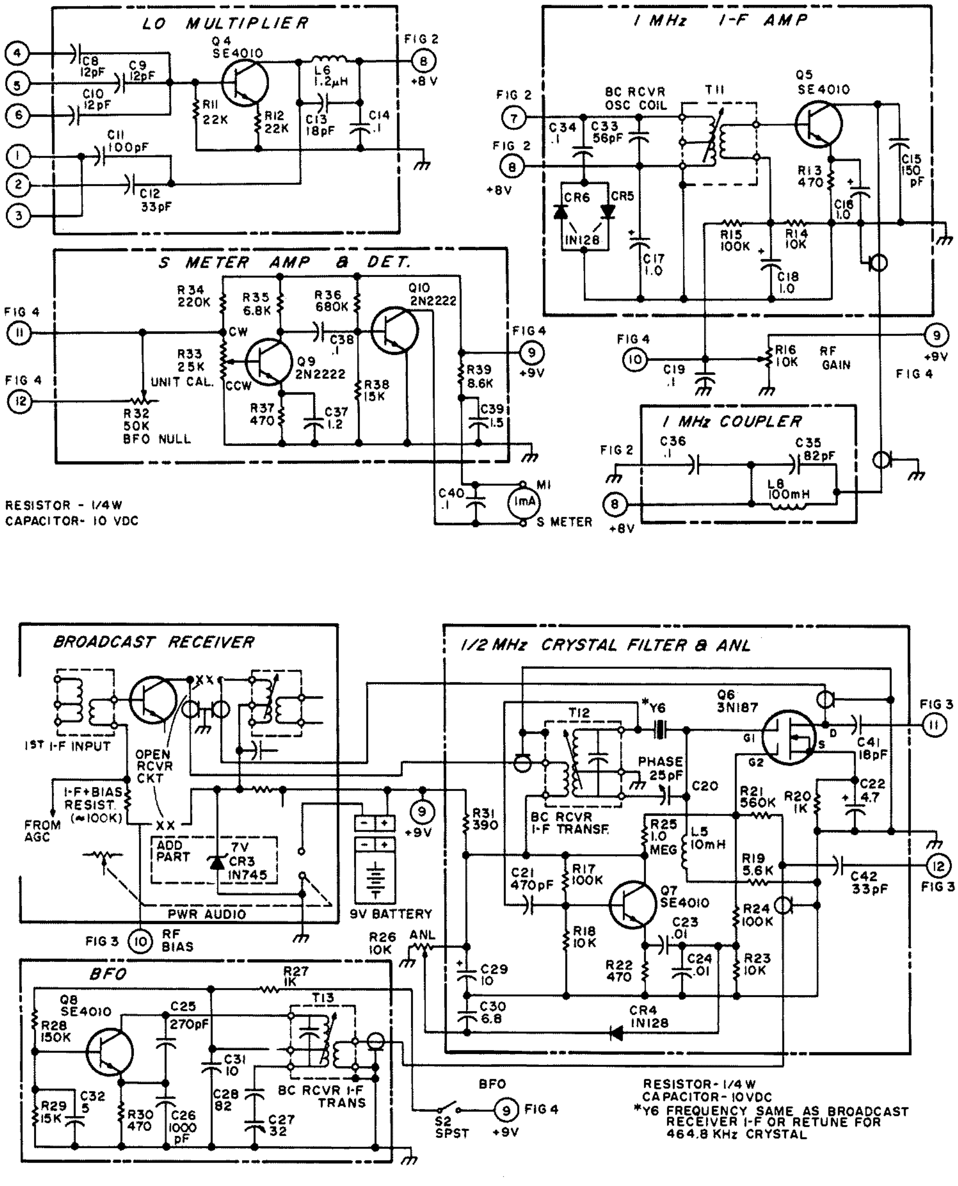

Fig. 4.

COIL - CRYSTAL TABLE													
BAND (METERS)	RECEIVER FREQUENCY RANGE (MHz)	RF AMPLIFIER					CONVERTER					CRYSTAL HF LO	
		TRANSF. SYM.	TURNS		WIRE (AWG)	CA (pF)	TRANSF. SYM.	TURNS		WIRE (AWG)	CB (pF)	SYM.	FREQ. (KHz)
			L1	L2				L3	L4				
80	3.13 – 4.18	T1	65	4	28	33	T6	65	7	26	47	Y1	4735
40	6.30 – 7.35	T2	42	2	26	47	T7	42	4	26	56	Y2	7900
20	13.35 - 14.40	T3	24	2	24	15	T8	24	3	24	47	Y3	7475
15	20.50 - 21.50	T4	14	1	24	6.8	T9	14	2	24	33	Y4	7350
WWV	14.40 - 15.40	T5	24	2	24	12	T10	24	3	24	39	Y5	7975
COIL DIAMETER - 1/4 in. (.635 cm.). CRYSTALS - FT-243 PRESSURE MOUNT TYPE. L2≈1mm. FROM L1 RF GROUND SIDE. L4 & L3 SAME SPACING: CA, CB, L1, L2, L3, & L4 SHOWN ON FIG. 2													

Fig. 5.

has an extremely narrow bandwidth.

When it is closed, it sends a strong signal around Y6 and the bandwidth is useful for SSB communication. The output of Y6 is kept at a very high impedance and connected to gate 1 of Q6. Gate 2 has the BFO output and the ANL bias feed to it. The BFO is mixed with the IF in this manner to prevent strong signals from pulling its frequency.

The gain of Q6 is regulated by the amount of ANL bias at gate 2. Its drain is connected through another coaxial cable back to the BC set IF transformer at the original collector connection of the first IF amplifier transistor. This completes the IF amplifier circuit again, but with the crystal filter, ANL, and BFO added to it.

To develop the automatic noise limited bias, the IF signal at the input of the crystal filter is transformed to a low impedance by Q7 and diode CR4 changes it to negative dc, filtered by C24. This diode is biased to different values above cut-off by the front panel control R26.

When the signal exceeds this bias, a negative voltage is developed which is subsequently fed to gate 2 of Q6.

The gain of Q6 will vary with a noise pulse all the way to cut-off, depending upon the setting of the ANL pot R26. The diode limiters are also part of the ANL but they are not adjustable. The main function of CR1-CR2 is to prevent serious overloads from damaging any components when the transmitter is keyed, and that of CR5-CR6 is to prevent audio distortion.

The S-meter circuit has an unusual input network that nulls out the BFO component of the IF signal so it will not deflect the meter. This is accomplished by adding the exact amount of 180 degree out-of-phase BFO power to the input of Q9 (Fig. 3).

It might look like a marginal balance, but I have not had to change the original adjustment of R32, and a year has passed without the meter being slightly deflected by the BFO. The rest of the circuit is conventional with a voltage amplifier Q9 followed by a collector detector Q10 that deflects the meter.

The final two modifications require soldering inside the BC set. One is to add manual IF gain control to prevent overloading, and the other to stabilize the collector voltage that feeds the MF LO to prevent modulation and drift. To locate the

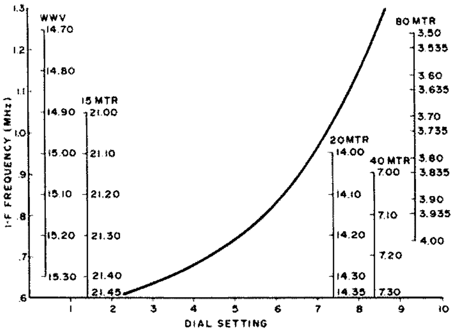

Fig. 6. Typical calibration chart.

proper place to do both jobs will take some looking around.

A zener diode, CR3 (Fig. 4), is connected across the large capacitor on the load side of the decoupling resistor feeding the collector power to the rf circuits. The resistor is about 100 Ohms and the large can type capacitor makes it fairly easy to locate.

Next you will have to find the forward biasing resistor of the IF amplifier base bias divider. My receiver has only one IF stage and it was no trouble to find. It will be about 150k and it feeds the power we just stabilized through the AM detector diode, which also doubles as the AGC generator, on to the cold side of the IF transformer base winding. This resistor is disconnected from the stabilized voltage and reconnected to the wiper of the front panel controlled rf gain pot, R16 (Fig. 3).

Construction

I assembled my receiver on a 15 cm x 10 cm x 5 cm (6 x 4 x 2 inch) chassis having a 18.4 cm x 12.7 cm (7¼ x 5 inch) front panel. The transistor AM broadcast receiver was selected because of its tuning dial and volume control layout. The negative side of its battery was connected to the ground plane, and the speaker opening was covered with a gold metal screen that would make a pretty good shield.

I found later that it had only one IF stage, but this certainly did not affect its sensitivity or degrade the project. The BC set must have extension shafts epoxied to its tuning and volume control dials so they can be operated outside the front panel. The new tuning dial is a vernier type and had to be mounted on a 1.1 cm (7/16 inch) homemade spacer so it would fit on the capacitor shaft.

The front panel controls, S-meter, speaker, and phone jack are located so that they are easily accessible. After the BC set has had its IF retuned to match the filter crystal, it is fastened to the front panel with two #2-56 bolts. One of the bolts has a solder lug under its nut so the BC set ground plane can be connected to the metal front panel through it.

The outboard circuits that convert the BC set into our communication receiver are made on pieces of "vector" breadboard material, and the components are soldered to press-in terminals. They were all made as small as possible and tested before they were mounted, using spacers, in the main chassis.

The bandswitch has two levels with three poles on each. All rf amplifier connections are kept on one level, with converter and HF LO connections on the other. A lot of effort was spent trying to keep the leads short and separated from each other, but it still turned out a mess. However, it works better than anyone could have imagined. I used #22 AWG solid insulated wire for the interconnections, and bare wire for the jumpers.

All rf transformers are mounted on the top of the chassis and are well shielded. The converter transformers are preassembled on a plate that fastens to a flange around a cut-out in one end of the chassis. These coils project into the underside of the chassis, isolating them from the rf amplifier input. The tuning is broadened by the heavy loading of both sets of coil with more primary (untuned) turns than would be used for high Q operation.

I used as much shielding as I could make without getting sick. It is very important to keep the outputs of the two local oscillators out of each other's converters, and the BFO harmonics out of the HF rf amplifier.

The cabinet is fabricated out of aluminum sheet and provides the shielding needed to keep out broadcast station signals. The front and rear panels are marked, after painting, with Datak dry letter transfers, and then sprayed with clear plastic to prevent them from being worn off. When the wrap-around top, bottom, and side piece is buffed carefully, the receiver has a professional appearance.

My semiconductors were selected because they were readily available to me. The SE 4010 transistors came from an old printed wiring board bought from a mail order house. When I ran out of these, I used 2N2222 transistors from another board.

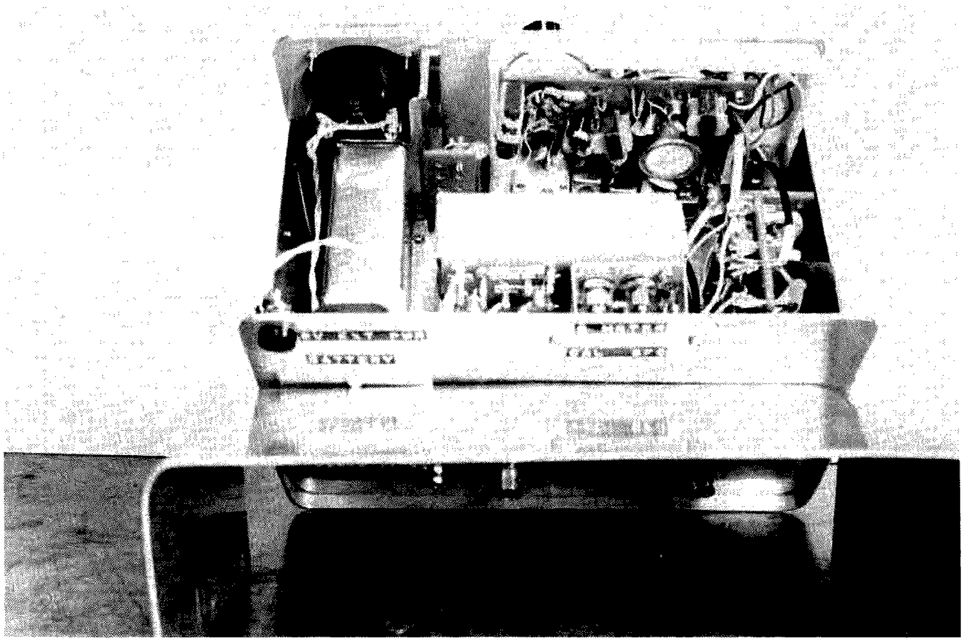

Fig. 7. Looking toward front panel with top half of cabinet removed. Top, left to right: S-meter, 1 MHz coupler next to loop stick antenna, AM broadcast set. Bottom: HF LO crystal shield, S-meter amplifier over the rf transformer shield, crystal filter and ANL circuit board.

Both are replaceable with Motorola HEP55, a NPN rf transistor.

The MOSFETs, Q1, Q2 and Q6, are the contents of a Radio Shack Archer Pack #276-628 called "Three MOSFET N Channel Transistors." You must watch how you solder these units in place. Keep all the leads shorted together during the process or the gates will surely be ruined. After they are in place nothing seems to be able to keep them from working.

Alignment

I aligned the tuned circuits of my receiver using equipment commonly found in the ham shack. Operation one is to tune the rf and converter transformers to the center frequency of their bands using a grid dip meter for an indicator.

Next, you must have the shields fastened into place, power switch placed on, rf gain turned fully on, audio gain one quarter up, ANL off, BFO off, phase capacitor fully closed, and the antenna input supplied with a signal from a VFO. The coupling must be very loose to the VFO.

The coupling recommended is two 50 Ohm resistors side by side, one fed by the VFO and the other across the coax connected to the receiver antenna terminal. There is no hard electrical connection between the two resistors (only the rf field), and the spacing between the two should be variable.

Back on the receiver, an oscilloscope is connected to the input of the filter crystal, Y6, using a high Z probe. The slugs in T11 and T12 are centered, and the bandswitch set to the VFO frequency range. The VFO or the receiver dial is varied until the rf is picked up and a ½ MHz IF signal is seen on the scope. T11, T12, and the rf converter transformer combination, when switched in, are adjusted until the IF signal is maximum amplitude.

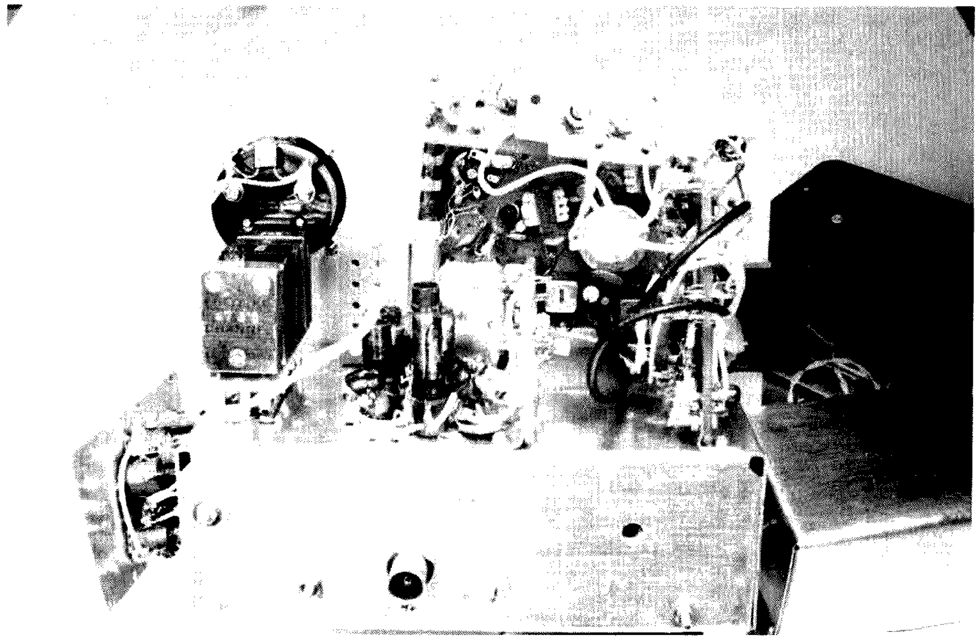

Fig. 8. Looking toward front panel with all shields removed, along with cabinet. Left to right: converter transformers on loose panel, HF LO crystals on home brew holder, 1 MHz coupler, rf transformers, rf amplifier, BC set, S-meter amplifier, crystal filter, ANL board.

The rf gain should be reduced along with the coupling to the VFO during these adjustments, to keep the scope presentation at an amplitude easy to see but not overloading the circuits (about a volt peak).

Connect the scope probe to the drain of Q6 and retune the receiver dial for a maximum display. Set the phase capacitor to its minimum bandwidth position, which is found by moving the VFO dial around the detected frequency. Move the scope probe back to the input of Y6 and tweak up T12 and the first BC set IF transformer so that their bandpass is centered on Y6's frequency.

Connect the scope to the output of the last BC set IF transformer and tweak up the remaining BC set IF transformers so they are also center tuned to Y6's frequency. The BFO is switched on, the pitch capacitor centered, and the slug in T13 adjusted for a zero beat, noted at the scope and the

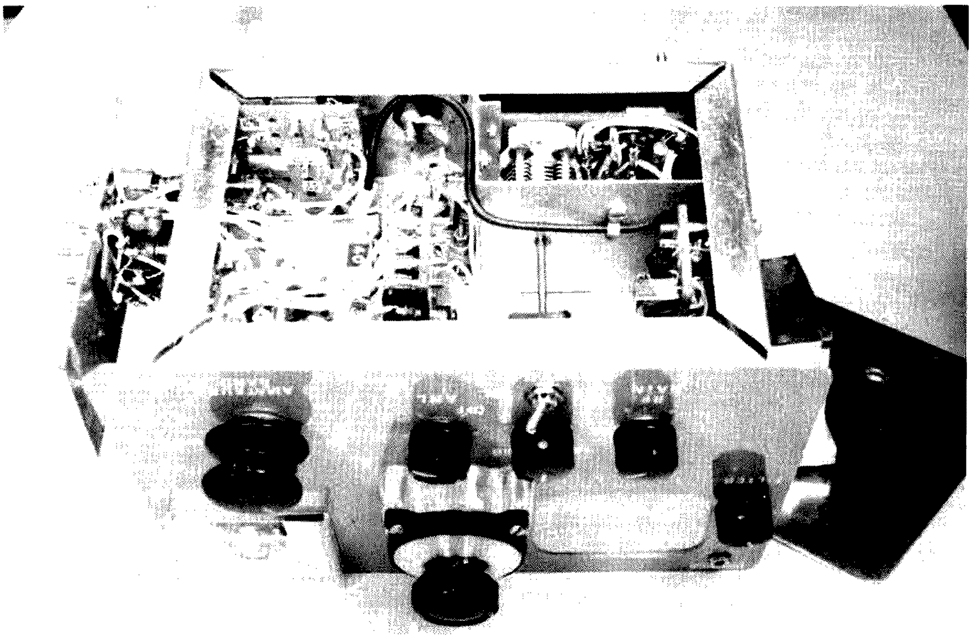

Fig. 9. Underside of chassis. Left to right: converter transformers on loosened panel, HF LO converter circuit board in back of bandswitch, LO multiplier, BFO in back of shield, 1 MHz amplifier.

tone at the speaker.

The last and simplest adjustments are made to the S-meter calibration pots, R32 and R33. Without an rf signal being applied to the receiver input, rotate R34 fully clockwise, place the BFO switch on, and adjust R33 to a position where M1 indicates zero. When an rf signal is present, M1 will deflect to a value proportional to its power. There is no clear-cut amount of rf power per S unit, so set R33 to a place where what you believe is a S9 signal in the phones reads S9 on the meter.

If you use a dial marked 1 through 100 like I did, a calibration chart will have to be made. One curve, and only one, is needed for all bands, because the BC set does the tuning each time. Fig. 6 shows how an easy-to-read chart may be laid out. The points for the curve are located by picking up the output of a 100 kHz crystal calibrator, and knowing the frequency of the converter crystals. Subtracting the HF rf frequency from it will locate the band scales on the chart.

Conclusion

This whole project was a very satisfying success. However, you could always do better if you had a second chance. The next time, I would replace the FT-243 style crystals with smaller devices, even though it would run up the cost.

Also, their frequencies would be such that the LO multiplier could be eliminated, reducing the battery drain by 5 mA. I believe that I would make the front panel larger to accommodate a different type of dial. I cannot find any fault with the semiconductor devices or the BC set, so I would stick with them.

In fact, the whole receiver fits and works so well beside my keyer that I am in no hurry to change anything. ■

Ham Help

Many people express an interest in ham radio, but find it difficult to locate a ham to answer their questions, peak their curiosity, and enroll them in a local area class. As public pressure for our frequencies increase, we must increase both our public awareness and our numbers in order to survive and grow. Through a new program called Ham Help, we hope to be the link between the prospective ham and you, the local radio club, the neighborhood ham, and the nearby radio class. Here's how it works.

A prospective ham will call the Ham Help number, ILL-1676. The 24 hour line will be answered by John Russell WB9UEC, Ham Help Chairman, or an answering machine. After getting the name, address, and phone number of the prospective ham, John will call a volunteer ham in the prospect's neighborhood. The volunteer will, in turn, call the prospect, and, hopefully, take a personal interest in the newcomer.

A program like this will obviously only succeed if all area clubs will volunteer information on area classes and keep the Ham Help file current. Here is what your radio club can do to help make it work:

INFORM: Call the Ham Help line to let John know about classes — include specifics such as dates, times, location, and who to contact. Please don't assume we have all the information we need; we can only get it from *you*. Continual updating of class information is essential for the program to work.

REFER: Refer others to Ham Help. We will be glad to be the clearinghouse for all classes in the area. Have them call ILL-1676 and we'll take it from there.

VOLUNTEER: We need volunteer hams to call back prospective hams that may call from your area. Invite them to your shack. Tell them about a class in your area (John will give you the info). Bringing a new ham into the fold is a rewarding experience that is good for you, your radio club, and the hobby. Call in to Ham Help and volunteer your services as an "Elmer" in your area. If your club would like to handle all requests from a certain area, let John know, and we will be glad to refer prospects to you. A good way to increase membership in your club!

Let me stress that, though CFMC is funding this program, we wish it to be a truly inter-club project. The Chicagoland area is ripe for a program of this type. Our hobby is the finest in the world — it's time we began to show it off!

Only through your club's (and its members') participation can Ham Help work. We ask that you print this in your bulletin or newsletter, and announce it at your next meeting.

We are banking on your continual support of Ham Help to make this program a huge success, and to bring new blood into our hobby and our clubs.

Rich Casey WA9LRI
President
Chicago FM Club
Arlington Heights IL

By way of background information: I am 67, still hold a lifetime FCC permit to operate on the former marine 2 to 4 meg band, hold the first renewal of my CB license (but have become disenchanted with that crowd and do not operate my Johnson 323 Messenger), have built a half dozen Heathkits (from stereos through VTVM to tachometers), and have just been nudged by a summertime neighbor, whose permanent address is Cleveland, to seriously approach ham radio. I have one of his back issues of *QST* and the July '76 issue of *73*.

Up here in the puckerbrush at Bridgton, Maine, amateur radio is practically unknown. I can't find a soul who can give me counsel.

I have written ARRL for a half dozen books (not yet received), and have ordered from Heath a starter set of code practice records and practice key toward going for Novice, or if I have enough practice time, to try for General in one jump.

From my copy of FCC Rules and Regs, Vol. VI, I have found Bangor, Maine, is the semi-annual location of examinations. How do I find out when and how much? How do I find out if there's a General in the area who could examine me for Novice?

How do I find out — in a HURRY — what licensed hams have known for a long time? Huh? Time is of the essence, because on this side of 60 there's a hell of a lot less of it remaining than there was on the front side!

From what little I know now, 80 through 10m is the spectrum that interests me, and I am looking for a used receiver, 5 band, SSB, all solid state, in perfect working order, to do a little listening, and to gather some education on the way. To get some good out of it, an antenna is a prerequisite, and some ideas on a simple dipole which I can hang between a couple of trees would be most welcome. Lightning arrestors, which are effective, are a must in this mountain country, where it gets pretty "snappy" now and again.

As you can plainly see, I'm not asking for much help, just the whole ball of wax!

Whatever assistance you may be able to provide would be most welcome. Thank you very much.

Charles A. Jurack
P.O. Box 145
Bridgton ME 04009

For those in our area needing help for Novice through Extra, please contact: Carthage Amateur Radio Society, c/o Mr. Dan Waters, Vocational Education Bldg., 6th and River Streets, Carthage MO 64836.

We meet each Wednesday evening at 7 pm local time at the vocational building.

Howard Gravitt WØCZT
Carthage MO

I really enjoyed your articles about computers in the Aug. 76 issue of *73*. I am 14 years old, and before we moved to Texas, I used to be real good at computer programming. The middle school that I used to go to had several terminals connected via telephone to the main computer at Westfield High School. The computer was a "Digital" PDP/11, BASIC language. The school I went to taught computer programming starting in grade 6. (The name of the school is South Middle School.) When we moved here, I found out that computer programming is not taught until 11th grade! If there is any way that I can use a computer near here, will you please let me know? I really enjoyed computer programming in BASIC language and would love to do it again.

Tom Trusty
2613 Lynnwood Dr.
Arlington TX 76013
(817)-274-7998

P.S. I am waiting for my Novice call to come back from the FCC. I took the written test about 1 month ago, and the code test a few weeks before that.

I think amateur radio is great, and I would like to add my name to your Ham Help list. I am willing to help any interested person get started in amateur radio in the Michiana area. All they have to do is drop a line to me.

Ron Lula WB9WXO
55428 Meadowview Ave.
South Bend IN 46628

We would appreciate it if you would list us in your "Ham Help" column. *73* is a lot easier to read than *QST* because it is at our level. We already have 2 receivers, but they are not very good. Thank you very much!!!!

Mark and Dave Buda
120 Pierrepont
Dunlap IA 51529
(712)-643-2273

I need help in Colorado (for Novice).

Mark Pollard
710 Mohawk
Box 3345
Boulder CO 80303

I need help to get into amateur radio.

Tom Griffith
Sequoyah Estates
Morristown TN 37814

How Do You Use ICs?

-- part IV

Alexander MacLean WA2SUT/NNN0ZVB
18 Indian Spring Trail
Denville NJ 07834

To those who are used to struggling with the vacuum tube version of the electronically regulated power supply, the IC voltage regulators can be quite an experience.

Within the realm of what is possible when working with any infernal electronic device, to know them is almost to love them.

While they come in a wide variety of sizes, shapes and internal configurations for specialized purposes, most of the jobs that the beginner and even the more advanced builder would have can be handled with only a few of the most commonly available types.

Here comes the fun part. Using these IC regulators is almost as simple as plugging in a transistor. The ones of most interest are three terminal devices and require only a few external parts.

The IC regulators are classified as linear devices. While there are a number of ratings which might apply, and a number of ways to get a more complex regulator using them, it is the simple way we want to explore.

As most of this series has been devoted to the digital ICs, the first voltage that would be of interest is the regulated five volts dc that the digital ICs require.

For this job there are two very common regulators which you will find in many of the circuits. They are the LM309H and the LM309K. (The LM109H, K are almost identical and are also commonly available.)

As can be seen from the numbers, they are very similar to each other. There are two practical differences between them: the package they are in and the power they will handle.

The LM309H is in a T0-5 transistor type package and will handle about 200 mA. The LM309K is in the T0-3 type package and will handle an Ampere of current.

Fig. 1 shows the pin configurations of the two. These are from the bottom of the package. While the DIP (Dual Inline Package) ICs are counted from the top of the device, these are from the bottom, like transistors.

This may be confusing until you get used to it, since you may be working from the top with a breadboard matrix or other construction technique.

With just three pins, you don't have a lot of choice to make. One is the voltage input, one is the regulated output and one is the ground connection. It would be hard to go wrong. Just make sure which pin is which.

Fig. 2 shows how the device hooks into the power supply circuit, and its basic external components. While the device can be used with as high as 35 volts input, there are dangers to doing this which will be explained later. Assume that the supply shown is in the nine to twelve volt range.

It is very important to understand the purpose of C2 and C3. They are not there to supply additional power supply filtering in the ordinary sense. A typical value for Cl would be in the neighborhood of 5000 uF, so the two additional capacitors with those values would have miniscule effect.

The technical data lists them as optional and not being needed for all applications, but don't you believe it. So what are they there for?

Specifically, they are there to prevent self-oscillation of the regulator IC and to prevent external pulses from upsetting internal operation. Self-oscillation?

A simple transistor regulator consists of a pass transistor to handle the current, controlled by several signal type transistors. As the voltage varies, it creates a signal which goes to the control circuitry which tells the pass transistor what to do to hold the voltage steady.

The LM309 has about 19 transistors and a heap of other parts in it. Even though there are only three pins on the outside, there is a whole lot going on inside.

As with any transistor, there is always the danger of it breaking into oscillation since it has the overall effect of being a high gain device.

This also means that it is susceptible to pulses from the outside getting in to cause trouble.

Even though this may not be a problem in all cases, the reports of IC equipment and experimentation so far have come up with another reason why they should be used as a matter of course.

ICs seem to find the signal they want in normal operation. This normal operation usually includes square waves which means there are going to be harmonics, spikes and so forth.

While ICs seem to thrive on a diet of crud and garbage like that, the rest of the world is not so tolerant. It would seem prudent to try to remove as much of it as possible from the nearby environment.

Shielding and bypassing should be employed as a matter of course to help keep this stuff from getting to the

Fig. 1. LM309H (K) 5 volt regulator.

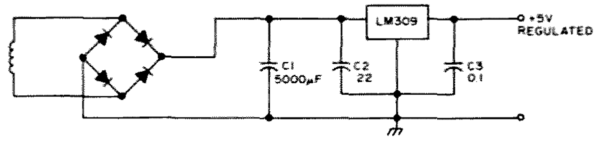

Fig. 2.

outside world.

The regulator bypass capacitors will not only help to protect it from itself and the rest of the circuit, but will help keep down the amount of damage that can be caused to other equipment from interference.

While the regulator can be located any reasonable distance from the supply, care should be taken with the placement of these capacitors.

While most of the IC parts values appear to have quite a bit of leeway, these appear to be specific values and should not be skimped on.

As with any bypass capacitor, locate them as close as possible to the regulator itself and keep the leads as short as possible.

While these two will handle the bulk of the jobs you will have to do with digital IC power supplies, there are many projects that will require a wider range of voltages.

Most of this can be handled by the LM340K or the LM340T positive voltage regulator series. Fig. 3 shows the pin configuration of the two and the chart of available output voltages.

The basic difference between the two is the package. The LM340T is in the T0-220 transistor package and the LM340K is in the T0-3 transistor package.

Either model will handle an Ampere of current output with care. Fig. 4 shows how this regulator hooks into the main circuit.

As the schematic shows, the same values are used for the bypass capacitors with this IC as with the LM309 series regulators.

The same precautions should be taken with the placement and the lead length — as close and as short leads as possible.

Fig. 5 shows the negative version of the LM340. This is the LM320T(K). Notice that there is almost the same range of voltages available. Also notice that the pin configuration is slightly different. This is important.

The negative input is also connected to the case which can then be connected to chassis ground, thus keeping chassis ground at negative potential if desired.

Notice in Fig. 6 that there is a ground symbol used rather than the familiar chassis ground. This is confusing as it is not the old meaning which was literally an earth ground, as opposed to the chassis common point which may or may not have also been grounded.

Here what is intended is the circuit common point, and not necessarily a connection to either the metal chassis or to an earth ground.

With solid state work there is often the problem that the circuit common connection can be either plus or minus and may not necessarily be either chassis ground or earth ground, and either plus or minus potential may be connected to the chassis or ground independently of the circuit common connection.

It makes for quite a few possible combinations which must be carefully watched for in the circuit. ICs are usually more straightforward in this

Fig. 3. LM340T(K) regulator. Code number includes voltage. LM340T (or K)-(5.0, 6.0, 8.0, 12, 15, 18 or 24).

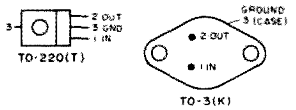

respect than transistors.

There is one big difference in the circuit which is immediately apparent in the schematic (Fig. 6). This is the value of the bypass capacitors.

They are ten times bigger than those for the positive regulators. Also they are rather specific about the type of capacitor that is to be used. They should be solid tantalum. Those are the minimum values that should be used. They can be higher if convenient.

About now panic is starting to set in as you try and figure out where to get solid tantalum capacitors. No, you don't have to try a midnight raid on Cape Kennedy. These are a fairly common surplus item. Usually the same catalogs that have the ICs you want will also list the solid tantalum capacitors you need to go with them.

While there are applications where you might want to build a negative regulated supply by itself, most of the time working with a separate supply you have only to switch the leads to do the job. This circuit was shown to simplify a larger supply.

There is one area where you will certainly want this type of negative supply. This is when you get into working with the IC op amps or other ICs which require a dual polarity supply.

These ICs make it very simple to get your plus and minus supply. All you have to do is put a negative and a positive supply back to back and you have it made.

This is shown in Fig. 7. As can be seen, this is virtually the same circuit as the two individual supplies, but now they are both together. The only thing that has been added is two diodes.

For this type of supply you just choose two regulators with the same output voltage, whatever is desired. These two were intended for just this type of service.

The diodes are a protective device to let the regulators start up looking into a common load. They may also serve the purpose of preventing a wrong polarity voltage from getting from one regulator into the other.

Notice that they are reverse polarity to the supply each is across and would block the voltage from the other where a load resistor would not.

The diodes are rated at the regulator short circuit current rating. For 12 and 15 volt dual supply (one Amp), a 1N4720 is listed. For a 15 volt 200 mA supply, a 1N4001 is listed.

That is the overall survey of the basic type of supply you will be working with. While there are far more complex configurations to handle extreme situations, these will serve for almost anything you might want to try.

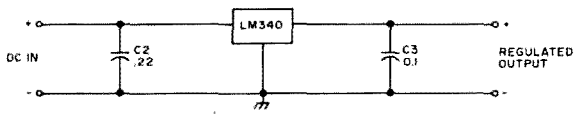

Fig. 4.

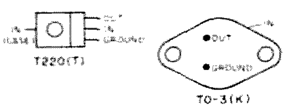

Fig. 5. LM320T(K) negative voltage regulator. LM320T(K) (5.0, 5.2, 6.0, 8.0, 12, 15, 18 or 24).

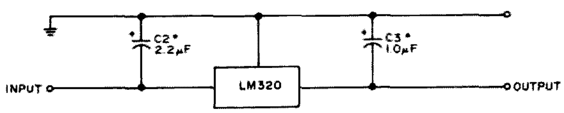

*Fig. 6. *C2, C3 — solid tantalum.*

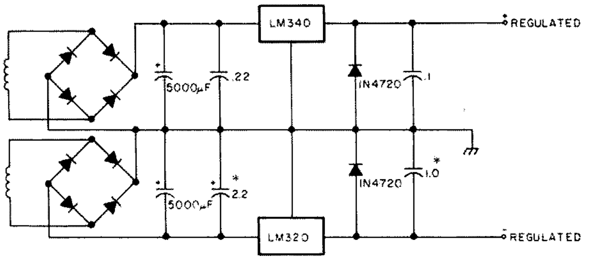

*Fig. 7. Dual polarity supply. *Solid tantalum.*

Within the range of simple variations on the basic design, you will be able to get even more practical advantage. However, before getting into variations, a few words are in order on the preservation of these devices.

While they are quite rugged when used as intended, as all transistorized equipment, they are quite intolerant of any mistakes you might make.

The easiest mistake to make is with the internal device dissipation. Most of these regulators will accept a voltage input of up to 35 volts and still give the required voltage output, but there is a built-in booby trap.

Assume that you want five volts for a digital circuit and have available a twenty-four volt supply. You could simply add the regulator circuit as shown in the drawing and you would get the five volts output, up to a point.

Under a light load, you would probably be OK, but when you started to draw much current, good-bye IC. This is the internal rating problem.

Assume that you want to draw one full Ampere of current through this regulator. With five volts out and an input of twenty-four volts, you are left with nineteen volts to deal with.

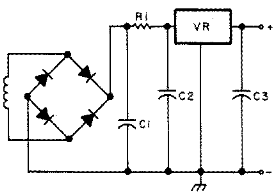

Fig. 8.

At one Ampere through the regulator, that means almost twenty Watts has to be accounted for. It helps to remember that this is a regulator, not a power resistor, and should not be used as one.

Some of these regulators can go a little over their ratings and may be more forgiving with the use of the proper heat sinks, but there comes a point where you have troubles.

Most of the regulators such as the LM309 series are built with an internal shut down feature for when the going gets hot, but even then you don't have to go asking for trouble.

There is one very simple way to deal with this particular problem. Use a dropping resistor. This is shown in Fig. 8. The value is quite easy to figure once you know what you are looking for.

Most of these regulators are designed to operate with anything from one volt over their rated output voltage up to their limit. To leave some margin, figure on a two volt margin.

In the example shown, the output is to be five volts and the input is twenty-four volts. The desired input is seven volts, two more than the device output. Assume that the maximum current of one Ampere is to be drawn.

This means that the resistor must drop seventeen volts. This works out to a seventeen Ohm resistor. If you want to be very safe, use a 20 Ohm resistor.

The power involved is seventeen Watts. Use a twenty Watt resistor at the minimum. Most of the time for experimental work you will not be drawing the full output, but it's nice to be prepared.

While this might be an extreme example, it is within the range of what might be encountered when you are working with what you have on hand. It points out your most effective rule of thumb.

If you want to have the maximum reliability of the circuitry when you are experimenting or designing, stay as far within the ratings as you possibly can.

The simplest thing to do is to start with the voltage you plan to use as the input source and then figure what the full load current and power would be through the regulator. As long as it is within the device's ratings, you would be safe.

It would be better to use the resistor as a matter of course, figuring it as in the example for two volts more than the output of the regulator.

This is based on a steady supply voltage. If the supply voltage drops under load, you may have to determine the resistor value experimentally for the correct input to the regulator. You should have some margin to work with above the two volts you are aiming for.

In this case you want to make sure that under full load you get the required input to the regulator. Under light load a higher input can be tolerated because it will not be dissipating much power.

Once you have the safety requirements for these regulators in mind and know how to work within them, there are several tough dog problems which have surprisingly simple solutions.

The first, and most obvious problem, is what to do when you need to supply more than one Ampere of current. This doesn't often come up with experimental circuits, but does with a lot of finished equipment.

The technical type answer to a problem like this would be to use an external pass transistor with the regulators as the controlling element. The transistor can handle the extra current, but it makes for a more complicated circuit.

There is an easy way out. Use more than one IC regulator. Split up the load among several so that no one has more than it can handle. This is shown in Fig. 9, and is quite a common feature of many circuits. It also provides better decoupling between different parts of the equipment.

When you are working with experimental circuits it would be nice to have a variety of voltages available. A multi-output supply is a formidable undertaking . . . or is it?

That same technique can be used to provide a number of standard output voltages. Fig. 10 shows the basic schematic. The resistance values can be figured the same way as in the example already given.

One thing to keep in mind is that the total output current is limited by the output current available from the basic supply. Thus if the supply can only handle three Amps, then you cannot draw more than that in total through the combined regula-

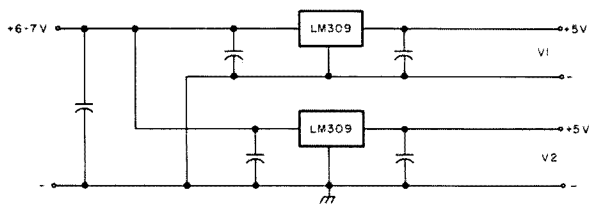

Fig. 9.

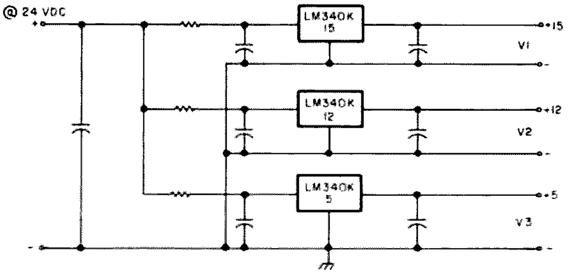

Fig. 10.

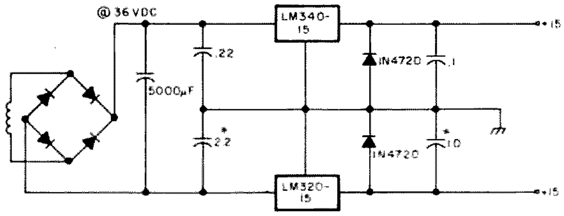

Fig. 11. *Solid tantalum.

tors.

Fig. 11 shows an oddball circuit that I was told would work with a single supply. It does not look like something for the faint of heart.

It might work, but it breaks the rules about not pushing the ratings. While normal operation would divide the voltage between the two so that each was only getting a few volts more than needed for operation, if one regulator were to short, it might throw the full voltage to the other regulator.

As this is on the dangerous side of the ratings, it might damage the other regulator too. It doesn't cost that much to play it safe.

That should handle just about any of the usual experimental or finished equipment regulated supplies you might need for most of your work.

These devices are probably the most commonly available on the surplus market, but there are many more that also can be used. Some are intended for more precise uses or other applications, but most can be used just the same way that the ones mentioned can.

A quick look shows that the external parts used are often the same values as given for the devices described.

This sort of information is usually supplied with the application notes for the IC. It would pay to get the application notes for any new type you were not already familiar with.

The IC and solid state field is constantly changing. By the time this is in print there may be a whole new line of goodies available to the experimenter on the surplus market.

There are a number of small regulators that will supply standard voltages at one or two hundred mils. These were intended for onboard use in sections of equipment and cost less than a buck each.

One item that is expensive now, but may come down, is the three terminal high current regulator capable of five Amperes of current or so.

Looking at the ads, there seem to be a number of small kits of parts and built modules that will supply sufficient voltage and current for both digital IC and op amp type ICs for a price close to what the parts would cost. They should be kept in mind as a quick and easy way into the game.

If you stick to the simple, available and cheap for a while and remember not to push the ratings, it will be hard to go wrong. ■

LETTERS

from page 26

one and one half year YASME DXpedition. They operated as VR1Z, VR8B, 3D2KG, C21NI, FK0KG and YJ8KG. (All QSLs via YASME, P.O. Box 2025, Castro Valley CA 94546.)

Iris recently applied to the FCC for a two letter call of her choice, under the new rule for Extra class holder with more than 25 years experience. Iris's first choice was W6QL (W6QL was formerly held by Jim Wells, a famous DXer, now a silent key). So it is now Lloyd, "W6 King George" and Iris, "W6 Queen Lady."

Iris and Lloyd hope to renew their "Worldwide YASME DXpedition" again to some different parts of the world in a few months.

Lloyd Colvin W6KG
Iris Colvin W6QL
Castro Valley CA

YOUR OWN LEXICON

May I suggest that somewhere in *73* you provide a column similar to the *QST* "Hints and Kinks" column but geared specifically to "computronics," i.e., the computer end of ham radio. Oftentimes there are little tidbits that we come across while putting together a computer system that can be of great help to others who may end up experiencing the same difficulty. Such little trivia as taking Elmer's glue and tacking each of the 48 fiber washers to the Imsai 22 slot mother board can save hours of time in trying to align each to its respective hole and also insure that there will be no shorts to chassis. Such helpful hints would not warrant a full length article and yet they are important. To further illustrate, if one wanted to purchase the IMSAI UCR1 cassette I/O board, it would be nice to know that this board is not a "connect the plugs and start recording" device. Rather, the board requires an extensive program to be entered, which takes about one hour on the keyboard and about three hours loading from the front panel. So unless one is prepared to buy an additional ROM or PROM board, there will be lots of loading to do each time it is to be used. On the other hand, the National Multiplex Corporation "CC7" data recorder will work as a stand-alone device. And, too, it will interface with current ham RTTY gear such as a model 28 or a deluxe Hal Ds-3000. We also have this recorder.

Ten months and almost $2,700 dollars later we have set up a very nice fully operating computer system. We have experienced the good and the bad. Generally the good has been Hal Communications, Godbout, etc. The bad has been in large measure due to ignorance, but also to a reluctance on the part of some companies to share with you all the pertinent information. Some companies such as Godbout and Hal will go out of their way to be helpful and specific. Others (nameless) will not do so, which puts one in a precarious position if he knows not what to ask.

Perhaps you could call the column Byte Bugs, Ins and Outs, Bug Bits or just plain Bugs. Or you could do like Shakespeare and create your own lexicon. Give it some thought, Wayne. There are a lot of fellow hams out there who are itching to jump into computronics and whose only reluctance appears to be a lack of knowledge. Certainly, one can hold the cost below that of a good transceiver and still have a fine computer controlled station that will also play Star Trek with the kids. I know, with the Hal Ds-3000 2.x tied into the company IBM-370, the IMSAI 8080 with lots of memory and a host of I/O cards and keyboards, I could provide lots of helpful hints.

Nenad S. Downing WB4SLO
Chattanooga TN

Anyone for Ins & Outs? — Wayne.

NUTS?

I've been in Taiwan, a police state incorrectly described as "an outpost of freedom," for a year. I read and speak Chinese so they don't fool me (and I've got an MA in studying them). You cannot believe how fortunate we Americans are — no secret police, no political slogans on TV, radio, and painted on every wall, a *free* press, policemen who help, not spy, and on and on and on. Of course there is no ham radio here, save for a couple of showcases in Taipei.

Add my compliments to S&D Sales. I ordered one of their cheap clocks. It arrived ten days after I mailed my order and works perfectly. Also got similar service on a CPO ordered from Heath.

Also pass on my compliments to the folks at *73*. I sent in an order for books and tapes and got them in three weeks! You folks must be nuts. Things don't work like that.

Joseph A. Schlatter, Jr. K4FPT
APO San Francisco CA

Don Inman
350 Nelson Rd.
Scotts Valley CA 95066

Hamming 101

-- another Cabrillo College pioneering program

Recently, I sat in on two sessions of a Cabrillo College summer school CW group. Cabrillo is a community college located in Aptos CA. The CW group is a part of ET 80AB, Special Projects in Electronics, which gives an opportunity for students to explore electronics areas of special interest on an independent study or seminar basis. Forty students are enrolled in the course; twenty-six of these are in the CW group.

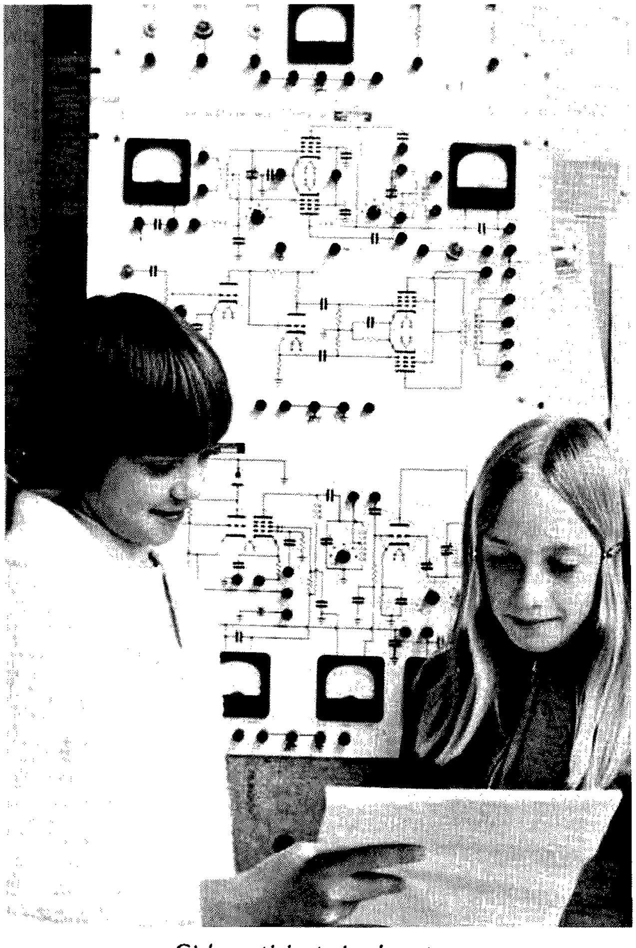

Girls participate in class, too.

Eddy Pollock, Director of Technical and Vocational Education, acts as the ringmaster for this three ring circus composed of beginners, advanced, and super students. The beginners group, at present, has ten members receiving and sending at 0 to 4 wpm. The advanced group has twelve working at 6 to over 14 wpm. The super group has four members qualifying at over 16 wpm. The goal of each student is to improve his code speed at least one word per minute per week.

Eddy keeps all three groups going at the same time in adjoining rooms. A normal classroom serves as a place for instruction and code practice. Enrollees take turns on the key so that both receiving and sending practice are provided. An adjoining room houses WB6JOD, the Cabrillo amateur station. Here is where the real action takes place. All groups have a chance to get in on "live" communications at the station as well as "canned" tape programs.

No doubt some *73* readers are aware of, or have communicated with, WB6JOD or its predecessor, WA6TST. Eddy established WA6TST when he came to Cabrillo in 1960. In 1962 Cabrillo moved to its permanent and present location and was assigned the call letters WB6JOD. The station is a part of the Electronics Technology Communications Laboratory, as well as serving as the Tri-C (Cabrillo College Communications) Electronics Club station.

Mr. Pollock, a charter member of the Institute of Amateur Radio and a lifetime subscriber to *73 Magazine*, is an inspiration to past and present Cabrillo electronics students. Well over two hundred students have obtained amateur radio licenses as a result of his efforts with the Tri-C Club. The club holds practice sessions at noon during the regular school year and in the evenings during the summer. Tri-C has scored high or won several DX and Field Day contests.

WB6JOD is a busy station with many users. It operates up to 30 hours some weeks, the total time depending upon the number of personnel available for supervision. Contacts have been made with approximately 150 foreign countries and all states in this country.

Licensed personnel attached to Cabrillo include: Eddy Pollock W6KHS, First Class Radio Telephone Engineer, Amateur Extra Class, and Citizens Band; Dr. Larry Edler WB6MVK, Extra Class; Jim Marshall WA6HCL, Advanced Class; George Jurichovich K6PPZ, General Class; Royce Krilanovich K6QJZ, Advanced Class, Adult Evening Program teacher; Mary Duffield WA6KFA, General Class, Electronics for Young People teacher.

During the 1976-77 school year Cabrillo will add specific seminars for radio. ET 84AB will prepare students for an Advanced Class FCC license, and ET 84CD offers preparation for the Extra Class FCC license.

All age groups and both sexes were represented in the CW class this summer. Intense interest was highly evident in the class as members offered

constructive criticism and encouragement to each other's efforts. This attitude seems to pervade the amateur hobby groups with which I have come in contact.

Community colleges, such as Cabrillo, help to fill a vacuum that is being created in our public secondary school systems. As school financing gets more critical, special interest classes such as radio, computer programming, and other electronics courses are in trouble. As schools become more crowded, the administration begins to examine the smaller classes for possible elimination. A teacher is thus freed to take the overload. By their very nature, laboratory classes are usually small due to equipment and safety factors. Therefore, they become the prime target for elimination. New courses being suggested in the rapidly expanding computer field are failing to get off the ground for the same reasons.

Many of us in the education field feel that these classes are important – even more important than some of the traditional classes which are "required" courses for all students. We must find ways to provide this kind of knowledge to our young people. It is in this area that community services offered by such community colleges as Cabrillo prove so valuable.

Another aspect of Cabrillo's Community Services was opened to me recently. My 12 year old son participated this past year in two electronics courses offered to youngsters. One striking feature observed was the creation of a soft-sell technique for education. Public school teachers, as well as parents, could learn something from this approach. No pressure for grades and no fact-memorization to pass tests were evident. Each session was a fun-filled and information-packed experience. From the surprise gift package of electronic components, which opened

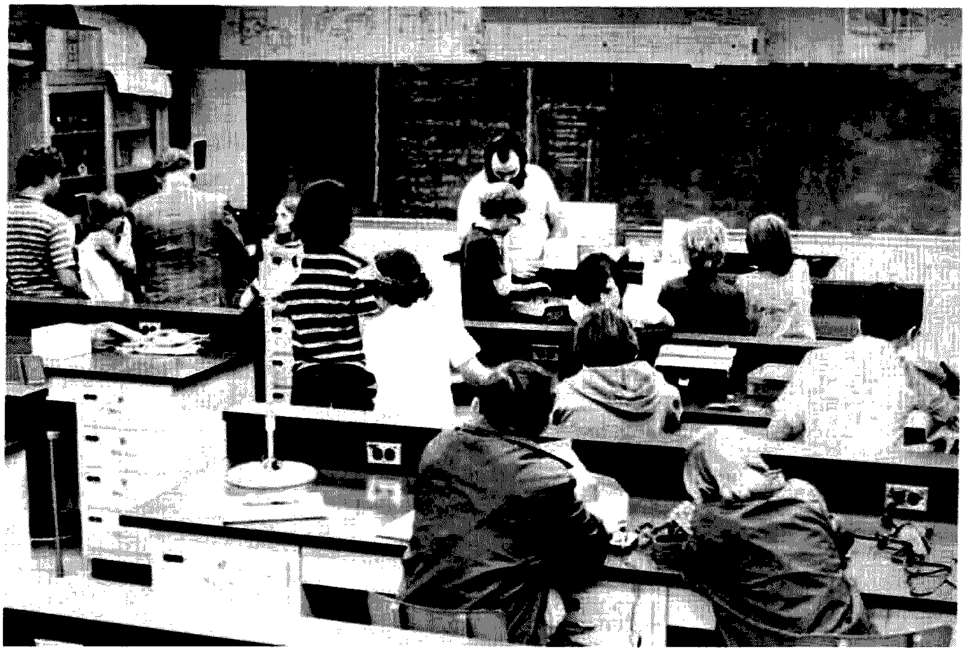

Class members of "Young People's Seminar in Electronic Projects" at work.

the first meeting, to the drawing for electronics books, which closed the final meeting, the course provided something for every participant.

This first course entitled "Electronics for Young People" was limited to 10-14 year olds. While the instructor introduced electronics fundamentals, the students were able to examine, feel and ask questions about the components under discussion. Color codes, component units, values, etc., were tied into the physical components in a meaningful way. A code oscillator, a frequency counter, a two meter transceiver and other electronic "goodies" received lots of attention during the break of the three hour sessions.

During the second session of this course, my son and I contributed a computer demonstration. An Altair 8800 with 1K of memory, operating in machine language, was used. This equipment is part of a system being built up by the Mountain Digital Group, a small local organization dedicated to providing the schools with an introduction to computers and computer programming.

While a brief description of the computer's operation was being given, Kurt programmed the computer. He loaded a few number guessing games for the students to play. (For those of you with new computer equipment but no input/output devices – take heart. There are a number of interesting things you can do through the front panel switches with only a small amount of memory.) In Kurt's first number guessing game, a correct guess triggered a music program and "Daisy" was played over a nearby radio. A guess too high turned on all the data lights, and a guess too low turned off all the data lights. The kids really went for this game. There were many "Far out!", "How neat", and "Ah" and "Oh" remarks from the young audience.

A visit to Cabrillo's amateur radio station highlighted the final meeting of the class. On one wall was a world map with a pin for each foreign contact made by the station. QSL cards were posted alongside from many stations. Eddy Pollock fired up the transmitter, and each student was allowed to speak into the "live" mike. It was several minutes before each student had sent the sounds of his voice over the airwaves. Eddy then spoke a few words into the microphone, and suddenly the students were confronted by the sound of their own voices coming back over the receiver. It seemed that Eddy's father, Earle WA6OSQ, another ham, had recorded the students' transmission and was now playing it back from his own transmitter. The students also visited the Radio and TV Lab of the college during this session.

During class breaks and at other times, Mary Duffield WA6KFA, the instructor of "Electronics for Young People," tuned in her transceiver to one of the amateur bands. While students gathered around, Mary explained how to get a ham license and encouraged all to take a crack at it.

Mary recently retired from 33 years in the public schools. Owner of a 35 foot sailing vessel, Mary was drawn to the field of radio communications out of necessity. Cabrillo provided her with the opportunity to learn electronics, and she now holds a General Class license. She has become so enthused over amateur radio that she is now thoroughly involved in

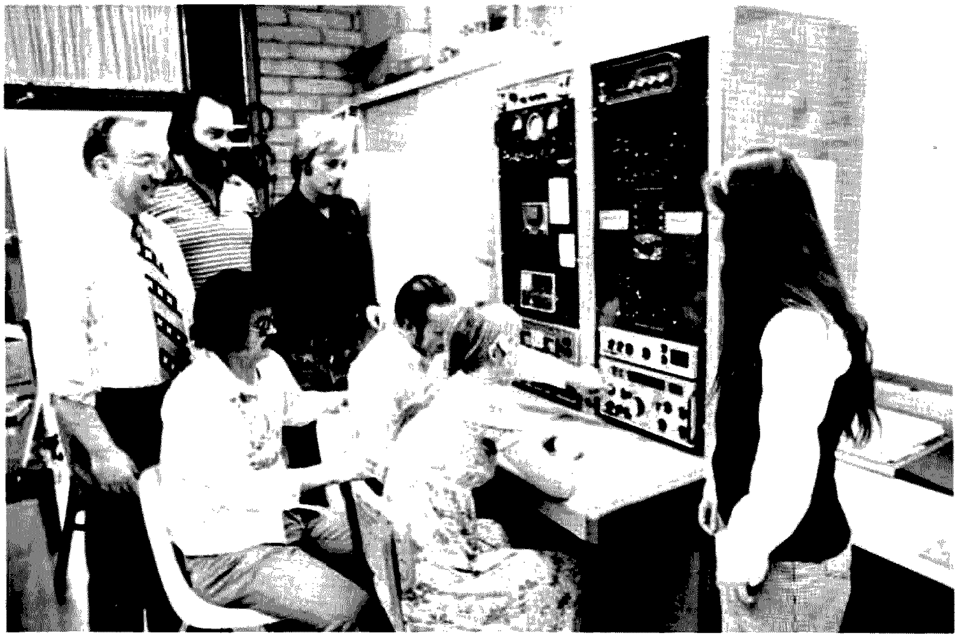

Members of Tri-C Electronics Club at the Novice station.

passing along her new-found knowledge to youngsters. As I write this, Mary is out at sea with a group of young people. They are involved in UNESCO work, contacting other young people from other countries. They're making friends via radio communications and face-to-face contact. Her summer experience should be a story unto itself.

Eddy Pollock is the real mover behind these courses for youngsters. He set up and taught the original course in 1971 at the urging of Community Services. Twelve students showed up for the original offering, and classes have been full ever since. Over four hundred children have poured through Cabrillo's doors to take part in this one course.

A natural follow-up to this introductory class was one called "Electronic Construction" taught by Eddy himself. This class opens with a quick review of the previous course. The students were then given a handful of components and a printed circuit board in order to learn and practice soldering techniques. Enough college students, who volunteered as lab assistants, were provided for almost a one-to-one ratio of supervisors to students. Recognition of components, their characteristics, and methods of mounting on printed circuit boards were demonstrated and practiced. Correct usage of hand tools, with particular stress on safety, was brought into play.

Students were allowed to select their projects from a suggested list for group purchase or to select one of their own choosing from some other source. Quite a variety of projects were chosen, including code oscillators, battery checkers, walkie-talkie AM radios, three-band radios, strobe lights, a parabolic microphone, and an infrared burglar alarm.

At the second session, all kits had arrived. An air of anxious anticipation filled the room. Before construction began, the students checked their parts lists for any omissions or incorrect parts. They were then on their own to construct their kits from the assembly manuals furnished. There was much excitement evident as boxes and plastic bags full of components were opened and examined.

"Is this a capacitor?"

"What is this?"

"Look at your parts list."

"Which resistor is the 1k?"

"Look at your color code."

Questions flew faster than the assistants could respond, at first. What an ideal learning environment! Then the class settled down to a semi-quiet concentration as parts began to be put into their proper places.

Two class meetings were largely devoted to actual construction of the projects. Lab assistants provided advice and aid when troublesome areas were encountered. Test instruments were provided to check out the projects at various stages of completion. Happiness and satisfaction glowed in the young faces as projects checked as desired. If the results were not satisfactory, a grim determination to find the cause and set things right was seen.

At the fourth, and final, meeting, the students were allowed some time to put final touches to their project. The projects were then arranged in groups, according to the age of the builders. Each student then inspected each project and cast a vote for the best constructed project in each age group. Students voted for the best overall project, also. Each winner received a prize, either an amateur radio book or a project construction book. The grand prize winner received a walkie-talkie construction project as well.

The future of amateur radio and other hobby groups seems secure as long as people like Mary Duffield and Eddy

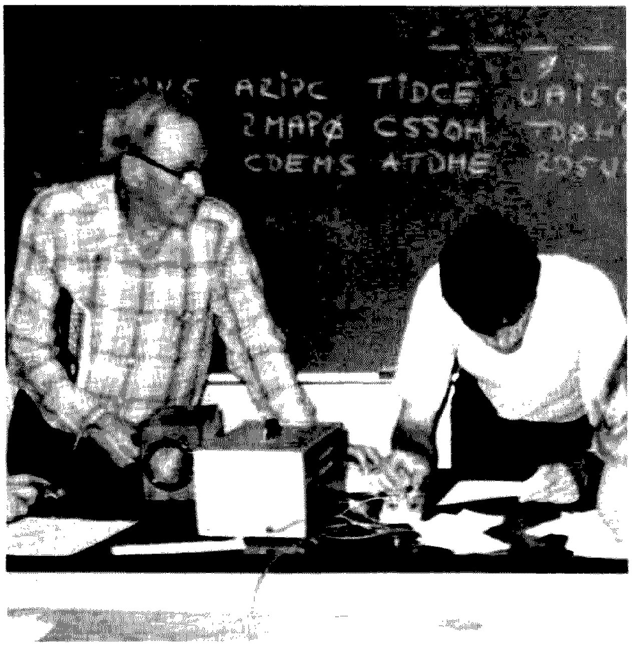

Code practice even during break at 1976 summer Special Projects class at Cabrillo.

Pollock can be found. But, they need help. Look around your own community and see if such courses exist. If not, find out if facilities and personnel to start such courses can be found. Find the persons who are putting their hearts, as well as their energies, into providing for those children whose education is rapidly approaching a "no frills" condition. Give them some of your time and help if you can.

At the present time, most schools feel that they have neither the facilities nor the personnel to handle programs of this nature. They also have problems scheduling nontraditional courses in an overcrowded situation. It is my contention that provision should and must be made. Certain techniques of learning in a laboratory environment are vastly superior to the lecture-test methods of many traditional classrooms.

My particular field of interest is in computers, and I feel very disturbed in meeting strong resistance to the implementation of courses in this important and fast growing field. As a member of the Mountain Digital Group, it has been my privilege to present demonstrations in our local intermediate and high schools, as well as at Cabrillo College. We also presented a session at the California State Science Teachers Convention in an effort to interest teachers in computer kitbuilding classes. With the appearance of inexpensive kits spreading at a rapid pace, it is obvious that there is no reason a student should be denied access to a computer.

Projects carried out this past year in my own classroom have shown that high school students, with little electronics experience, are capable of putting together microprocessor kits. In addition, they acquire an amazing amount of electronic knowledge in an enjoyable, informal atmosphere. ■

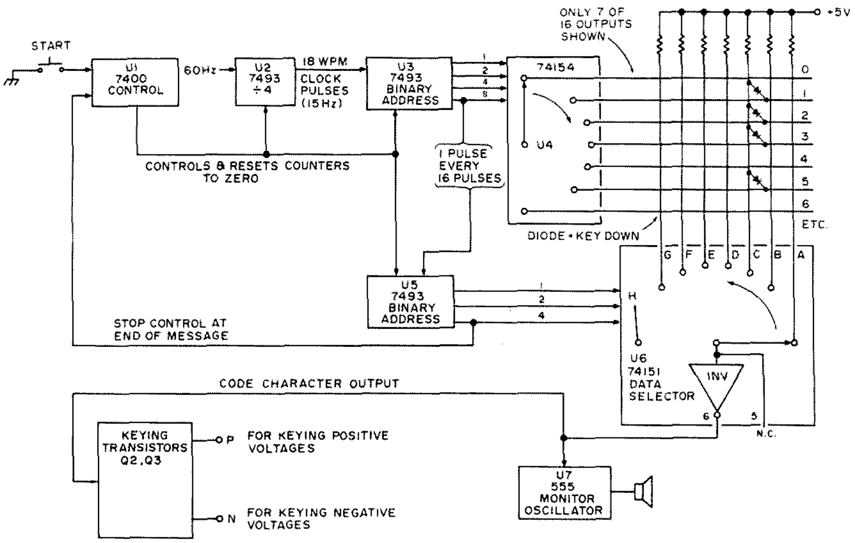

Bert Kelley K4EEU
2307 S. Clark Ave.
Tampa FL 33609

Fig. 1. Block diagram of CW IDer.

A Super Cheapo CW IDer

-- for FM repeaters and RTTY

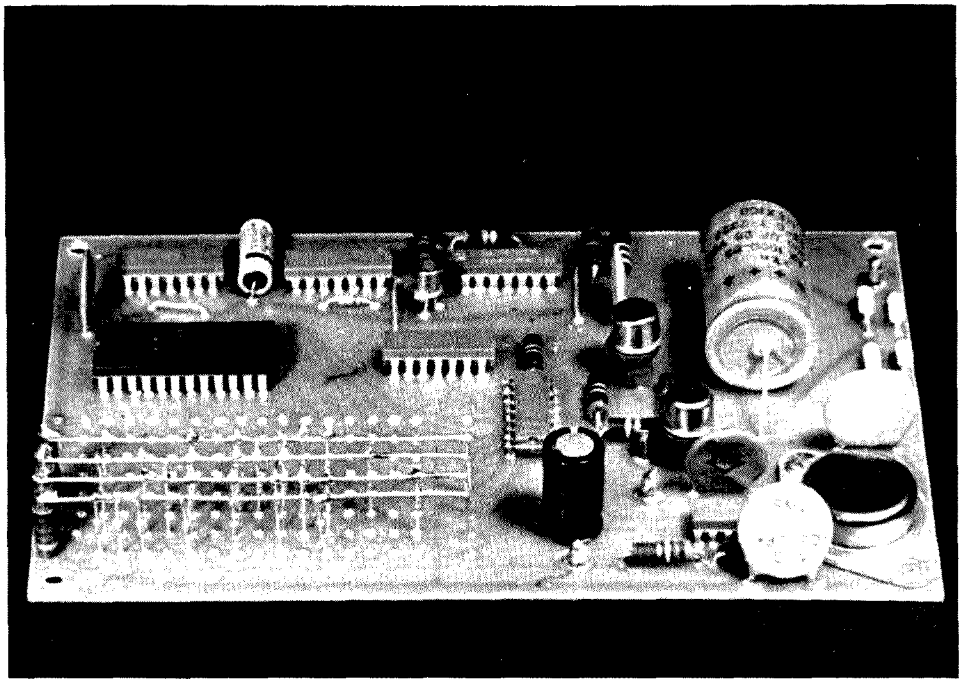

Side view of board showing construction of matrix.

This device automatically generates your call letters for the FCC required CW identification and can be started by either a push-button or a pulse from other equipment. If you have been hand sending CW or using a mechanical code wheel on RTTY, here is a way to improve operation at low cost. It also has an audio output that can be used as a monitor or to modulate FM repeaters.

The IDer is complete on a small 4" x 6" circuit board with built-in power supply, provision for either positive or negative voltage keying without relays, monitor, and an adequate 128-bit diode memory. Its simple design is its best feature because the TTL logic required is cheap and available. The diode memory is easily programmed or, if necessary, changed when needed. Contrast this with more sophisticated designs using programmable ROMs which must be programmed correctly the first time with no mistakes. The code speed is derived from the ac line for a fixed 18 wpm. This eliminates a few parts, and adjustment, but fully complies with regulation 97.87(h). Last, but equally important, a circuit board is available to help you in construction.

Circuit

The block diagram (Fig. 1) shows the functions of the integrated circuits. U1 is a start/stop control and resets U2, U3 and U5 so they start each sequence from the same point. A push-button or pulse sets U1, the control line goes low, and U2 starts dividing 60 Hz pulses by four, driving U3. The BCD output of U3 determines the status of U4, a four line to sixteen line decoder/multiplexer – actually a sort of single pole, 16 position rotary switch. As U3 counts, U4 advances and grounds each of the sixteen outputs in sequence. In the meantime, U5 is counting each time U4 finishes a complete sweep, and with U6 is used to select the eight output lines A through H, so that only one is active for each sweep of U4. This multiplies the 16 position output of U4 by a factor of eight, giving a matrix with a 128 position or "bit" capacity. When U6 has completed its sequence, U5 generates a pulse which automatically resets U1, and concludes the transmission.

The eight input lines to U6 are pulled to a logic one by 2200 Ohm resistors mounted vertically on the circuit board. The inverted output of U6 then remains low and the keying transistors are inactive unless the scanning sequence is started and reaches points in the matrix where diodes are connected. They allow U4 to ground inputs of U6 without short-circuiting all the connections together. If we assume the IDer is at rest, pin 1 of U4 is grounded, and the input line A of U6 is positive via the 2200 Ohm resistor. Since this is the at rest or starting point, no output is wanted and therefore this position has been omitted from the circuit board layout. When the button is pressed, the matrix is scanned from the resting point A0 through A1, A2, etc., to A15, then B0, B1, B2, etc., until operation concludes at H15. Viewing the trail side of the circuit board, it is in reverse to the way you read a paragraph in a magazine. The schematic (Fig. 2) shows an example of the IDer as programmed for "DE K4EEU."

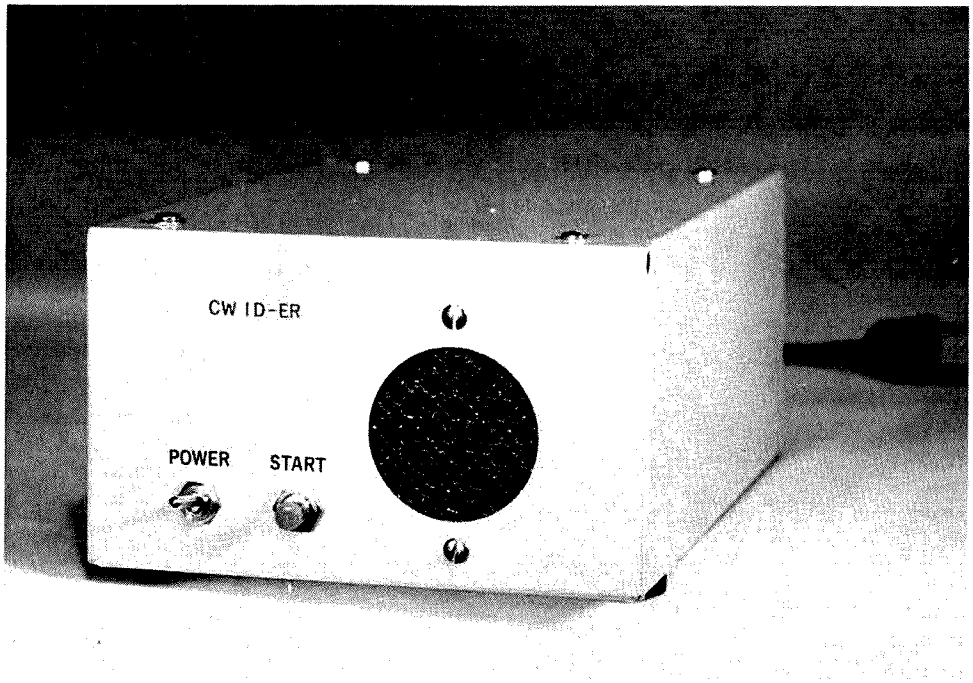

Front view of CW IDer.

Q2 and Q3 are high voltage keying transistors. If you are keying a positive voltage, only Q2 is installed. For negative keying, add Q3 and a 1k base resistor as shown. Naturally, Q2 can be used to operate a relay if you want to key an isolated voltage in a B plus line, for example.

Monitor

The 555 timer makes a simple and effective monitor. The frequency will be about 800 Hz with components shown, a square wave which is more than adequate to drive a small speaker directly. The tone is all right for monitoring but may be cleaned up with a simple low pass filter.

Parts and Construction

A circuit board layout is given in Fig. 3 for those who want to make their own. An epoxy, undrilled, but plated circuit board with parts list is

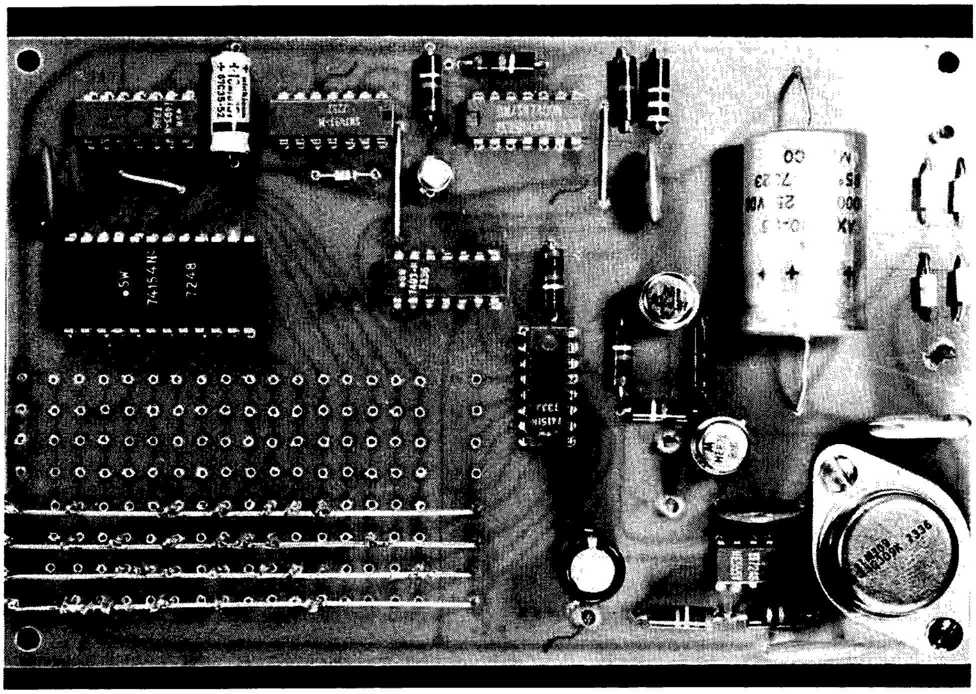

All parts mounted on board. Note ample reserve space in diode matrix.

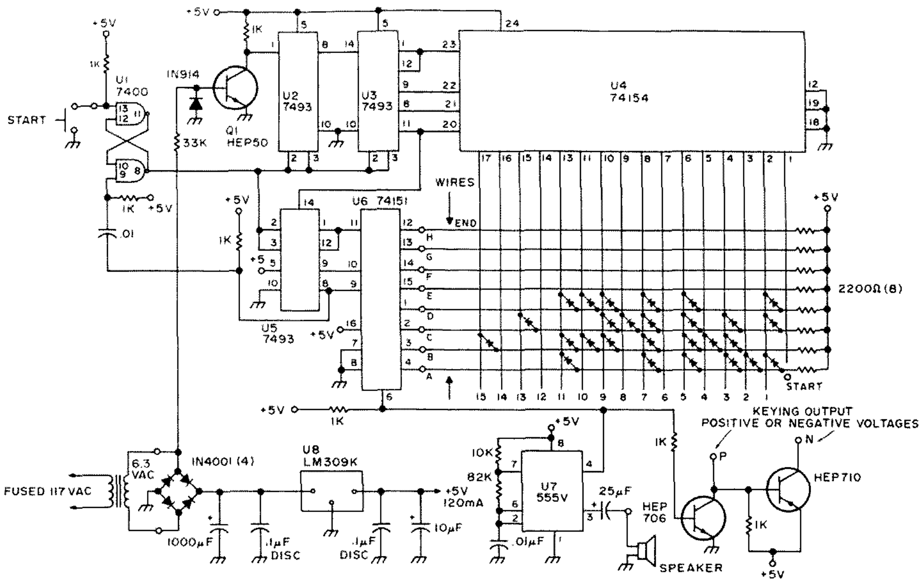

Fig. 2. Schematic of CW IDer programmed for "DE K4EEU."

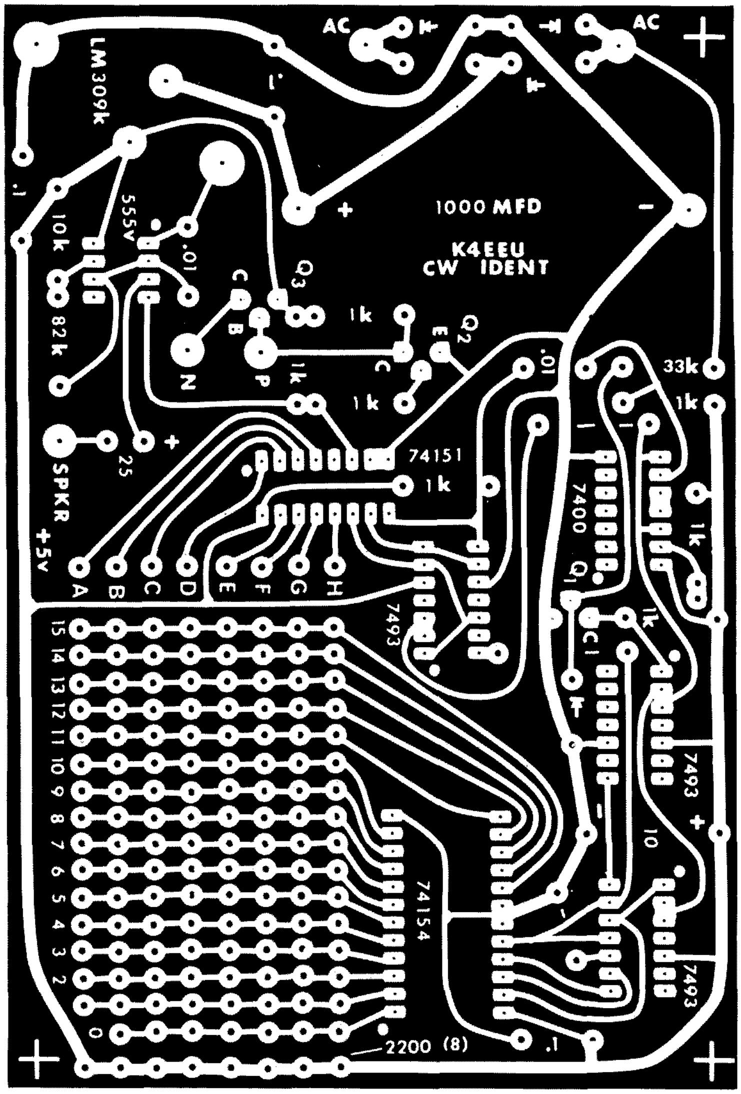

Fig. 3. PC board.

available from me for $8 postpaid US and Canada only. Parts locations are screened on the board to make construction fast and easy.

The HEP transistors are shown because they are stocked by many local parts houses as universal replacements. RCA has a similar line and SK-3018, SK-3103, and SK-3025 may be substituted for Q1, Q2 and Q3. The remaining parts are sold by advertisers in this magazine.

Note that the mounting screws on the LM309K regulator are also circuit connections, and verify that the regulator output is 5 V within a few tenths of a volt. Diodes may be either silicon or germanium, but should be checked on an ohmmeter. They are mounted vertically with cathode band toward the circuit board.

The speaker impedance is not critical. Once the holes are drilled with a #60 drill all parts can be mounted on the circuit board and the unit bench-tested in about one hour. The completed device can be installed in a small 5" x 7" x 3" chassis or mounted in vacant space in other equipment such as a RTTY demodulator.

Programming

This is done by installing diodes at locations where a tone is wanted on the matrix according to the following rules: The first bit, A0, is reserved for standby. A dash is three bits, or three diodes in a row; a dot is one bit, or one diode; a space is one bit, or no diode. Three vacant spaces between characters, and seven bits or vacant spaces between words. An L-shaped bus is formed of stiff plated wire and connected above the board between each A, B, C, D, E, F, G, H input of U6 and supported at the other end above the board by the vertical 2200 Ohm resistor. The anodes of the vertically mounted diodes are soldered to these buses. ■

J. B. W. Jackman ZF1MA
PO Box 459
Grand Cayman, W.I.

The ZF Special Antenna

-- double-D "beam"

Have you been in search of an antenna with gain, directivity which you can use on all bands, and low cost? Your prayers have just been answered, because out of VP2, ZF1 comes an antenna which will satisfy all these requirements – as three years of on-the-air tests have verified.

The antenna consists of two equal triangular loops 69'9" in overall length. Both are coupled very closely by passing the loop of the driven side through the undriven side, as shown in the diagram at B.

The support boom can be made from any type of material: wood, bamboo, aluminum, PVC tubing. Nylon fishline was used for guying.

How does it work? Fantastic! Numerous hams around the world have asked me to let them have information on the antenna. The ZLs say they hear me when they hear no other station in this area. How would a 30 over 9 from New Guinea grab you?!

On 10, 15, and 20 meters, 75 Ohm coax cable provides a good match; however, on 40 and 80 meters a transmatch is recommended.

The antenna I am presently using has 4 elements at right angles to each other, with all the vertical elements connected to the center conductor of the coax and all the horizontal portions connected to the braid. Needless to say, the results have been fantastic on all bands. ■

Fig. 1.

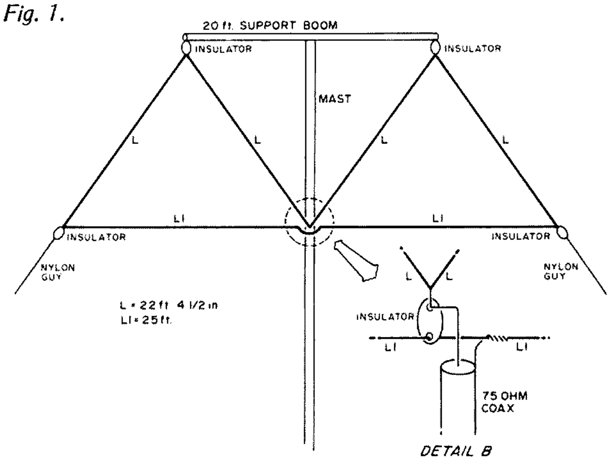

W. J. Prudhomme WB5DEP
1405 Richland Avenue
Metairie LA 70001

CT7001 Clockbuster

-- the ultimate clock/calendar (for now)

For several months, I have been toying with the idea of building a digital clock using one of the many integrated circuits that are out on the market today (see the ads in this magazine). A recent sale on the Cal-Tex CT7001 clock-on-a-chip integrated circuit was too much to resist. I quickly ordered one along with six readouts and was soon on my way to constructing a digital clock. The results of using the CT7001 have exceeded my expectations, and this article is an attempt to provide you with sufficient information to build your own.

The CT7001 has many features which may be selected according to how the various scanned inputs are connected to the digit output pins. The chip is also available in either seven segment outputs (CT7001) or BCD outputs (CT7002).

General Description

Fig. 1 is a block diagram of the integrated circuit and external connections. All that is necessary to make use of the integrated circuit is a power supply, 4 or 6 readouts, and the external switching matrix which will be described in complete detail later in the article. The integrated circuit makes use of a 60 Hz timebase frequency from the power line to count the hours, minutes and seconds. There are also provisions for battery backup should the power line fail, and the integrated circuit has its own internal oscillator to take over the 60 Hz timebase. The actual frequency is determined by the RC circuit connected to pins 25 and 26 of the integrated circuit. There are no particularly critical parts of the external circuitry with the exception that you should use an integrated circuit socket rather than soldering the IC directly into the circuit. The reason for this is that the MOS type circuit is sensitive to static electricity which could destroy some of its inputs.

The particular mode of operation is determined by connecting various digit outputs to the three scanned inputs of IN1, 2 and 3. The chip was designed so that setting any one particular counter such as the time, alarm, calendar, etc., is possible without upsetting or affecting the contents of any other counter.

Since there are so many options available with the CT7001, I have not made this a detailed construction article, but rather a description of how to apply the CT7001 and by so doing, allow you to choose the options you desire in constructing the digital clock. This way, it will be possible to tailor the external circuits according to your own individual requirements.

The integrated circuit will accommodate 4 to 6 seven segment displays as shown on the block diagram. It will direct drive luminescent anode display tubes, and the application brochure from the manufacturer states that it will direct drive common cathode LEDs. However, one word of caution is in order. It will

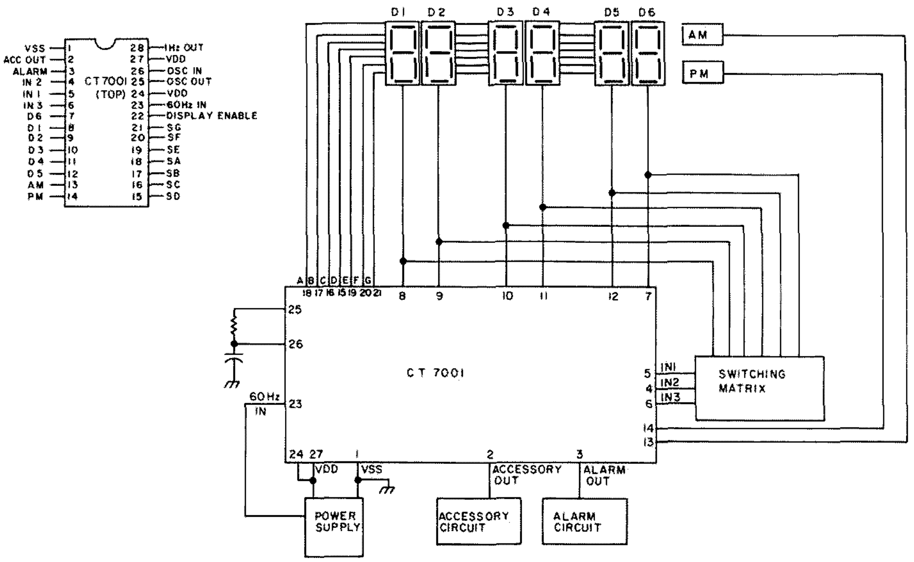

Fig. 1. Block diagram of CT7001.

direct drive common cathode LEDs as long as the segment current does not exceed five milliamps. If your particular LED will draw more than five milliamps per segment, it will be necessary for you to incorporate either the transistor driver or integrated circuit driver that will be described later in the article.

To summarize, the CT7001 incorporates a 28/30/31 day calendar, 12/24 hour clock operation with true 24 hour alarm setting, snooze alarm, 50 or 60 Hz timebase, 6 digit direct drive display, clock radio features, on chip 60 Hz backup oscillator and easily settable counters which will be explained in the following section.

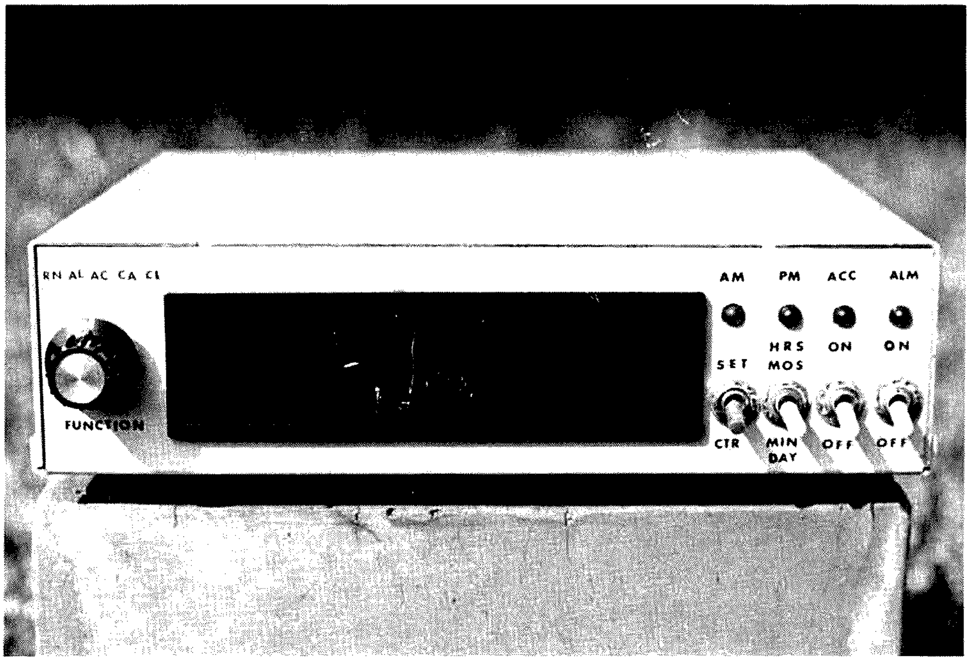

Front view.

Operational Modes and Switching Matrix

Referring to Fig. 2, we have a chart showing the scanned input options which are available with the clock. The first input is IN1 and by connecting various digit output pins to this IN1, the operational mode of the clock will be changed accordingly. Likewise, the same holds true for inputs IN2 and IN3.

For example, there are three display modes available, depending on the connection of IN3 to either D3 or D4. With no connections to the C1 or C2 inputs, the time will be displayed for eight seconds and the calendar for two seconds. If the C2 input is closed (D4 to IN3), only the calendar will be displayed on a continuous basis. Likewise, if the C1 input is closed (D3 to IN3), only the time will be displayed on a continuous basis. The am and pm outputs will operate during the clock and alarm display modes when the clock is operating on a 12 hour basis. If it is switched over to a 24 hour clock, the am and pm outputs will not be available.

This means that if the 12/24 hour input is closed (D2 to IN3), the clock will operate on a 24 hour basis (00:00:00 to 23:59:59). Should the 12/24 hour input be opened, the clock will display 12 hours with an am and pm indication both on the clock display and the alarm.

If the alarm switch is turned on (D1 to IN3), the alarm output will go high when the clock counter is coincident with the preset alarm counter. The alarm output will remain high until it is terminated by opening the alarm switch.

While the alarm is functioning, if the snooze switch is closed momentarily (D6 to IN2), the alarm will be disabled for ten minutes and this cycle can be repeated as many times as desired until the alarm is disabled by opening the alarm switch.

There is also a counter built into the clock chip that can be set in one minute increments from 9 hours and 59 minutes to 1 minute. This feature can be used to control some external appliance and may be utilized in three different ways depending on the setting of the Mode A and Mode B switches.

When Modes A and B are off, the accessory output will then be high for the preset time by closing the accessory switch, and this timed cycle can be interrupted at any time by opening the switch. When the accessory switch is closed again, the countdown will continue where it left off.

If Mode A is on and Mode B is off, the accessory will go high for the preset time period and also go high at the alarm time, providing the accessory switch is on. This mode may be used to turn a sleep/learning tape off automatically and then wake you up at the preset alarm time.

Input Pin	Scan Time	Input Name	Definition, Connection	Definition, No Connection
IN1	D1	Set	Set Counter	
IN1	D2	Set H/M	Set Hour or Month Digit	Set Minute or Day Digit
IN1	D3	Clock Radio Switch	Clock Radio Switch - On	Clock Radio Switch - Off
IN1	D4	Mode A	Mode A - Off	Mode A - On
IN1	D5	Mode B	Mode B - On	Mode B - Off
IN1	D6	50/60 Hz	50 Hz Input	60 Hz Input
IN2	D1	Set Calendar	Set Calendar Counter	
IN2	D2	Set Clock	Set Clock Counter	
IN2	D3	Set Alarm	Set Alarm Counter	
IN2	D5	Set Clock Radio	Set Clock Radio Counter	
IN2	D6	Snooze Switch	Snooze Switch - On	Snooze Switch - Off
IN3	D1	Alarm Switch	Alarm Switch - On	Alarm Switch - Off
IN3	D2	12/24 Hour	24-Hour Operation	12-Hour Operation
IN3	D3	C1	See note below	See note below
IN3	D4	C2	See note below	See note below

Fig. 2. Scanned Input Options. There are three display modes: (1) If the C1 and C2 inputs are left unconnected, time will be displayed for 8 seconds and the calendar displayed for 2 seconds; (2) If the C1 input is closed (C2 open), the time will be displayed on a continuous basis; (3) If the C2 input is closed (C1 open), the calendar will be displayed continuously.

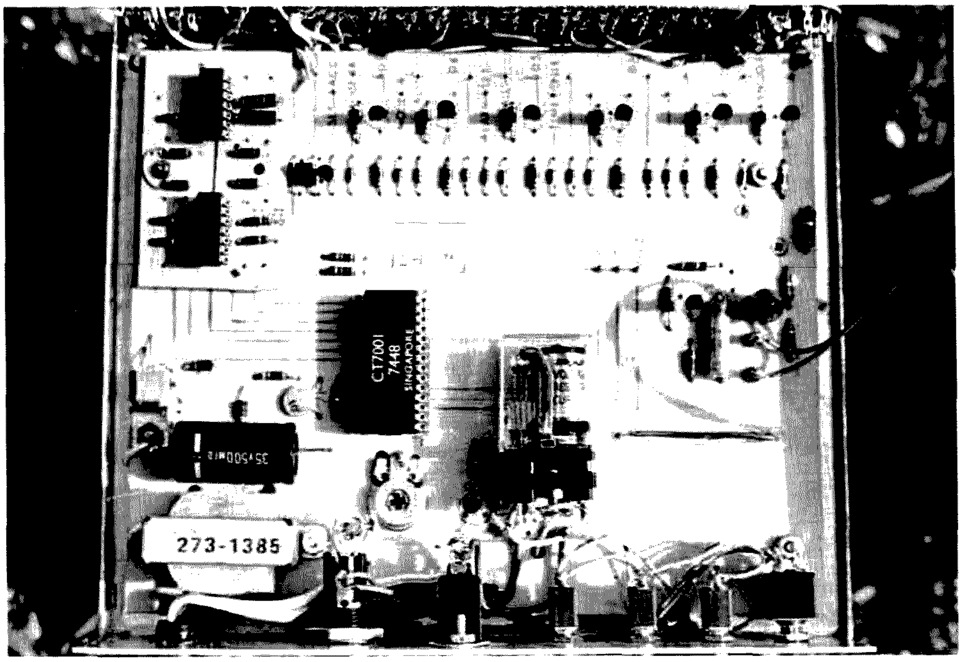

The third possibility is to have both Mode A and B turned on with the accessory switch on. This will allow the accessory output to go high for the preset time *only* at the alarm time. This function may be used to turn an external appliance on for a certain length of time at any desired time. The individual counters are very easy to set with this particular integrated circuit and the procedure is as follows:

The counter to be set is selected by closing the set calendar clock alarm or accessory switch, which is accomplished by connecting either D1, D2, D3 or D5 respectively to the IN2 input. Then, if D2 is connected to IN1, the hours or month digit will be advanced. Or if D2 is not connected to IN1, the minute or day digit will be set. Once this is determined, connecting D1 to IN1 advances the digits of that particular counter at the rate of one digit per second. During the set clock function, connecting D1 to IN1 also sets the seconds to zero and freezes this particular register until the clock is started again. This allows you to set the time say one minute ahead of WWV time, wait for the tone, then switch the function switch to run at the right moment. With this feature, it's a cinch to synchronize the clock with WWV.

The calendar display for this particular integrated circuit is very unique. It has an internal memory which can determine which months have 28, 30 or 31 days. It will count the correct number of days for each month and advance to the next month at the end of the last day of the previous month. The only day which has to be manually set is February 29. This means that once the calendar is set, it will only have to be reset once every leap year on February 29. When I think of all the times I have had to manually reset the calendar on my calendar watch, this one feature is well worth the price of the chip.

Typical Circuits

Now to discuss some actual circuits you can use to build a digital clock. It is possible to incorporate either common cathode or common anode LEDs in the display. As mentioned previously, direct driving of the LED segments can only be used if the particular LED that you are using is a common cathode with a current draw of five milliamps per segment or less. Figs. 3 and 4 show a typical application for transistor driving common cathode and common anode LEDs. Six digit driver tran-

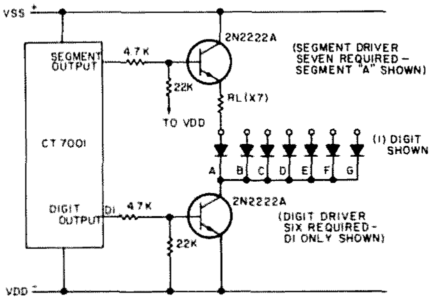

Fig. 3. LED interface for common cathode. RL is sized to limit current for specific LED used.

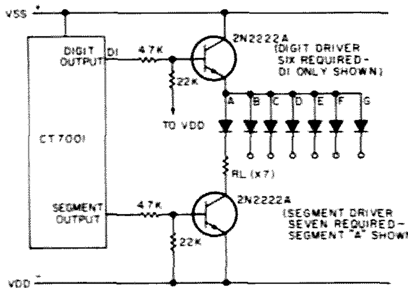

Fig. 4. LED interface for common anode. RL is sized to limit current for specific LED used.

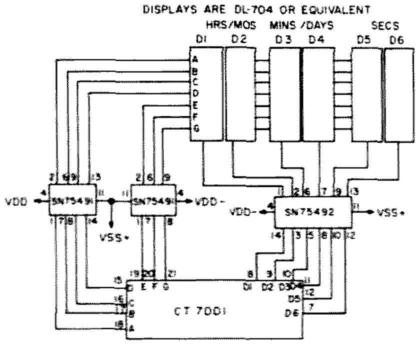

Fig. 5. Improved LED interface using SN75491 and SN75492 integrated circuits (for common cathode LED). SN75491 – quad segment driver; SN75492 – hex digit driver. Notes: (1) For both SN75491 segment drivers, pins 3, 5, 10 and 12 are connected to pin 11 through 150 Ohm ¼ W resistor. (2) Vss = 7½ to 9 V dc (10 V dc max).

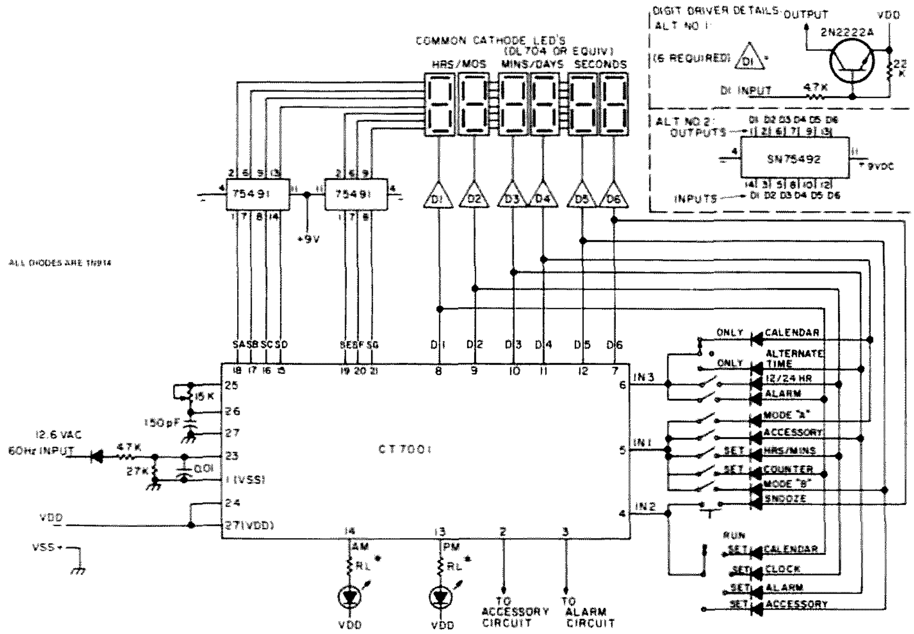

*Fig. 6. Typical clock circuit for common cathode readouts. Note: Each of the SN75491 segment drivers has pins 3, 5, 10 and 12 connected to pin 11 through a 150 Ohm ¼ W resistor. *Choose RL to limit LED current to less than 5 mA (typically 2.7k).*

sistors are required as well as seven individual segment drivers. Since the displays are multiplexed, all segments in the display are wired in parallel. This greatly reduces the number of drivers and load resistors that are required in a typical circuit.

It is also possible to use integrated circuit drivers for the digits, which greatly reduces the amount of external wiring. Fig. 5 indicates an improved LED interface using SN75491 and SN75492 integrated circuits. This diagram is for a common cathode installation. The SN75492 is a hex digit driver and the two SN75491s are quad segment drivers. For both of the SN75491 segment drivers, pins 3, 5, 10 and 12 are connected to pin 11 through a 150 Ohm, ¼ Watt resistor. The application sheet on both these integrated circuits indicated that the maximum supply voltage is ten volts and it is probably better to operate them between 7½ to 9 volts dc to avoid any damage to the integrated circuits.

In my particular clock, I had already etched the circuit board before I realized that it would be possible to use the improved interface integrated circuits. Consequently, my particular clock is a hybrid, using six transistor digit drivers and two SN75491 quad segment drivers as a typical application. This is shown in Fig. 6 and incidentally, this diagram is a typical application which allows you to incorporate all the functions that are available within the clock integrated circuit.

In order to keep the front panel of the clock as simple as possible, I located the display select, 12/24 hour, Mode A and Mode B switches on the rear apron of the clock. The set/function switch, the set counter, and the hours/minutes selector along with the accessory and alarm switches were located on the front panel of the clock. I used LEDs of different colors to indicate the am and pm settings of the clock and also an LED for each of the accessory and alarm switches to indicate when these switches were turned on. This feature helps to remind you to turn off the alarm or accessory when you don't want to be awakened early on a Saturday morning.

There are various options in regard to the alarm circuit, and Fig. 7 shows a typical alarm circuit using a transistor driver interface to turn on a programmable unijunction transistor oscillator driving an internal 8 Ohm speaker. A potentiometer can be incorporated into the circuit to vary the tone of the alarm output to suit your own particular preference. The output from this oscillator is sufficient to awaken all but the most ardent sleeper.

A friend of mine included another unijunction in his clock to produce an alarm similar to a police siren. However, the side effects the wavering alarm tone had on his wife prompted him to quickly change the circuit back to a steady, soothing tone.

A transistor driver circuit, similar to the one used to turn on the alarm, can be used to operate a 12 volt dc relay. The contacts from this

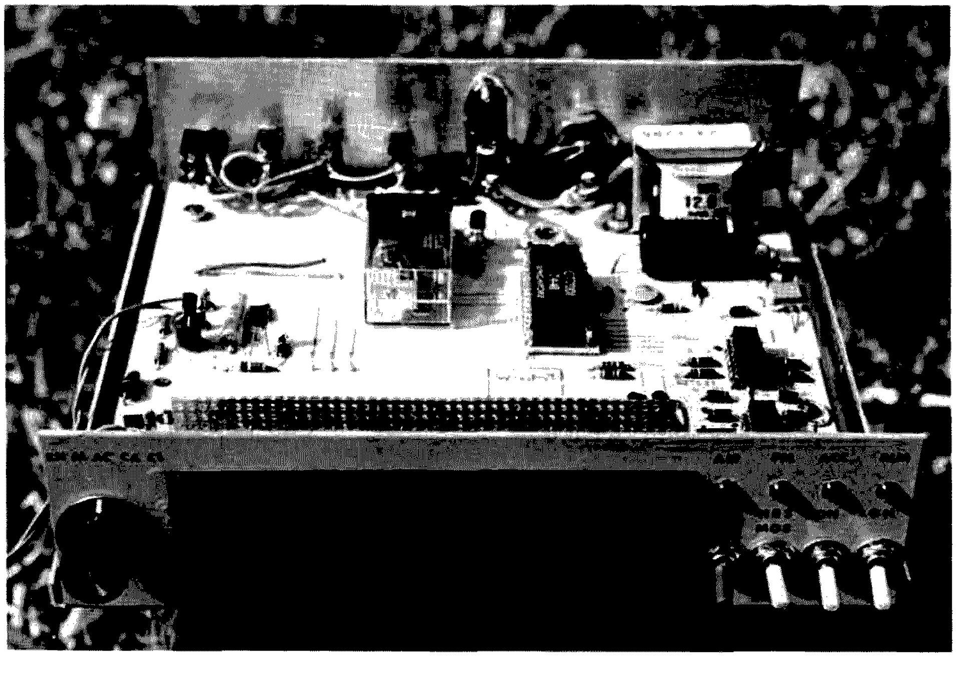

relay can be used to control some type of accessory function such as a clock radio, lamp or appliance. In my particular installation, I am using it to switch 120 volts ac to an accessory socket at the rear of the clock which is used to turn on a small radio. However, it can also be used to turn on some external appliance or other similar function. The circuit diagram is shown in Fig. 8.

Various power supply options are available depending on your own personal requirements and the amount of regulation that is desired. Fig. 9 shows a typical power supply with a PNP power transistor used to help regulate the output for the unit. Battery backup is provided by two nine volt batteries installed with a six volt zener diode. CR2 is installed to prevent the battery from supplying power to the displays when the normal power has failed. The battery is only used to operate the integrated circuit with its on-board oscillator to keep the clock functioning during a power failure. A variation to this circuit may be used to display the time for short periods to conserve battery power. Simply connect a momentary, N.O. SPST push-button switch across CR2. This will allow you to bypass the diode to display the time.

In some cases, it may be objectionable for the leading zero to be displayed during clock operation and also during calendar display. It is possible to blank the leading zero by means of a transistor and a few resistors. Since segment F is the only segment not required to form the digits one or two, it can be used to uniquely describe zero. If segment F is present during D1 time, the 2N2222A transistor will turn off the D1 to the display while preserving the D1 signal to the input matrix. Fig. 10 is taken from a Cal-Tex applica-

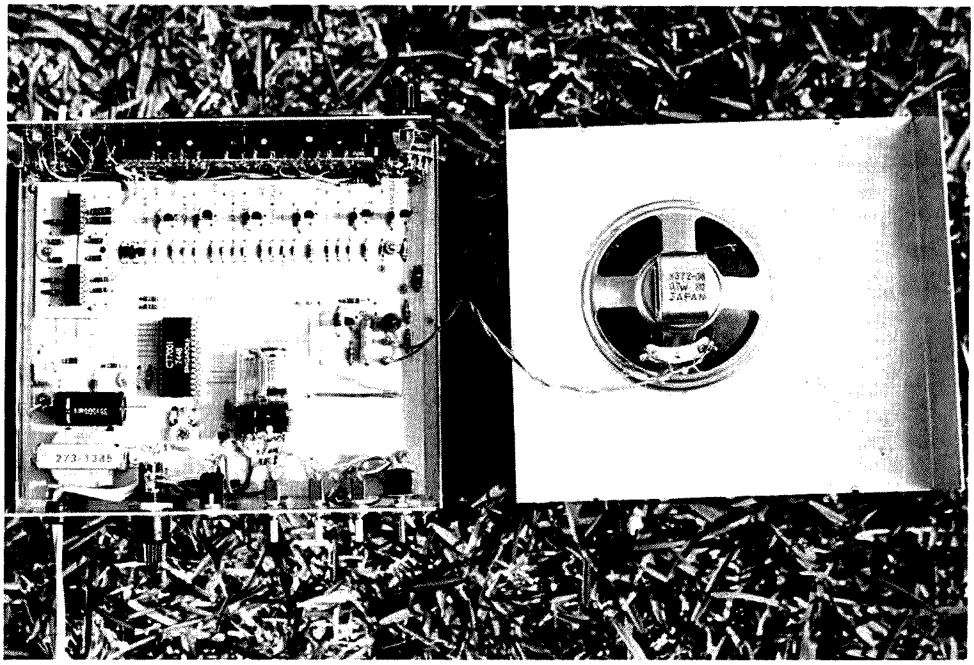

Top view, showing alarm speaker.

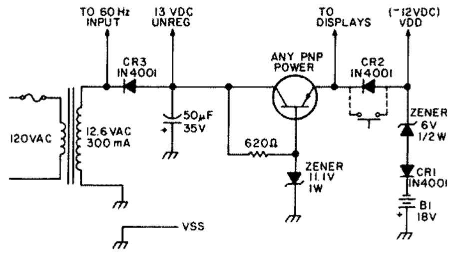

Fig. 9. Power supply for the CT7001 clock. During normal operation, all power is supplied from the ac power supply. During a power failure, the clock continues to operate from the battery backup composed of two 9 volt batteries. To limit current drain on the batteries, a diode blocks power to the displays. A push-button bypass switch across diode CR2 may be installed to momentarily view the display.

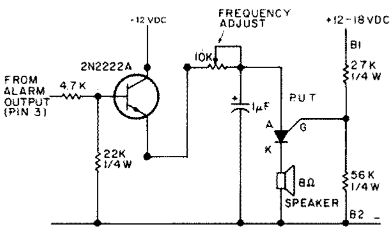

Fig. 7. PUT = programmable unijunction transistor (Radio Shack 276-119 or equivalent).

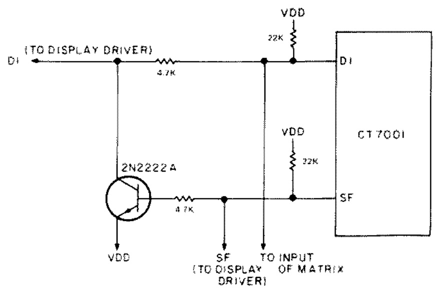

Fig. 10. Zero suppressing the D1 digit. Since segment F is the only segment not required to form digits 1 or 2, it can be used to uniquely describe 0. If segment F is present during D1 time, the 2N2222 A will turn off the D1 to the display, while preserving the D1 signal to the input matrix.

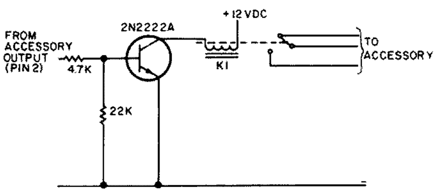

Fig. 8. K1 = 12 V dc coil relay suitable for switching accessory loads for miniature size.

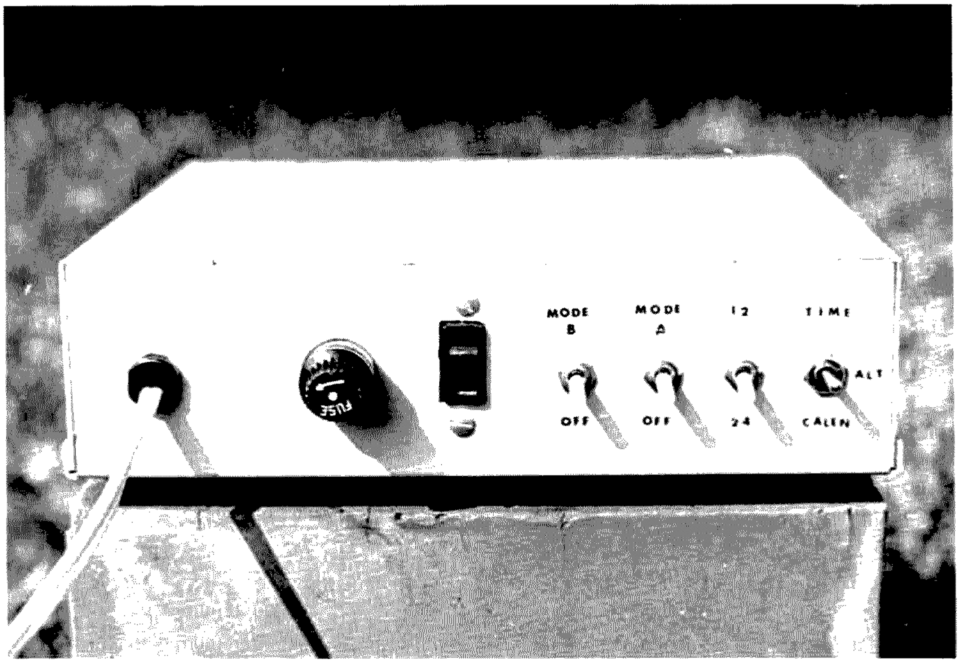

Rear view.

tion note on how the circuit should be connected to zero suppress the leading zero. Since I have not incorporated this feature in my particular clock, I can't vouch for the values of the resistors to be used, but I assume that they are the normal values that are used in the other driver transistor circuits. You might try a 4.7k resistor for the base and a 22k resistor for the bias resistor.

For those of you who desire more accuracy than the power line regulation, or for that matter, high accuracy when the power line fails, it is possible to incorporate a crystal oscillator as an external timebase. This is shown in Fig. 11 using a 100.800 kHz crystal with a one megohm resistor and a 5-50 pF variable capacitor. The frequency can be trimmed with the variable capacitor to result in a very stable external timebase whose accuracy is a function of the crystal used.

Conclusion

The clock has been in operation for several weeks now using only the timebase from the power line frequency to determine the accuracy of the clock. This timebase has proven to be adequate for most operations.

In checking its accuracy in reference to WWV time signal, I have only noticed a few seconds variation over a couple of weeks. This high accuracy is due to the fact that the power line frequency is corrected from time to time so that its average deviation cancels out. As a result, the power line is a reliable source for a 60 Hz timebase, barring momentary power lapses. When this happens, the chip displays one more feature – at the moment power is restored, the clock begins counting, but displays all 8s. This is to let you know that the count is not accurate. By momentarily closing the set counter switch, the clock display will appear. Keep this in mind the first time your clock is turned on, as all 8s is a normal indication until the set counter switch is closed.

In closing, I highly recommend the CT7001 digital clock/calendar IC, and should you decide to build your own digital clock, it's a good idea to obtain the basic application notes from Cal-Tex Semiconductor along with the supplementary application notes listed in the references. ■

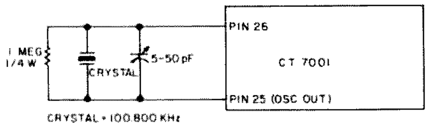

Fig. 11. External timebase. In this mode of operation, it is necessary to connect the 60 Hz input (pin 23) to Vss (Cal-Tex AN#107).

References

(1) *CT7001 Digital Clock/Calendar Circuit*, October, 1973
(2) Supplementary information on CT7001 – dated January, 1975.
(3) AN#108 – Display oscillator.
(4) AN#103 – LED interface for common anode.
(5) AN#102 – Display options.
(6) AN#105 – Colon blanking during calendar.
(7) AN#107 – External timebase.

All references listed are available from: Cal-Tex Semiconductor, Inc., 3090 Alfred Street, Santa Clara CA 95050.

Karl M. Schulte WA2KBZ/JY9KS
4011 Bluebird Lane
Rolling Meadows IL 60008

Saving a CBer

--a new resource for hams

The harsh jangling of the phone grabbed me by the eardrums, and cruelly vibrated me awake. Slowly, groggily, I fumbled at the bedside phone, resolving to leave it off the hook the next Friday night. It seemed that I had just dropped off to sleep, and a quick look at the clock confirmed that impression; it was 9 am, and I had turned the rig off only three hours ago. Trying to work Australia with my minimal antenna system was as fruitless as hunting with a water pistol – all night and no luck.

The phone had reached my ear by now, and I mumbled something into the mouthpiece. "Good morning, Karl!" said an all too awake and cheerful voice. "I just passed my Advanced exam and I wanted you to know."

"Ken, are you kidding me? You just got your General three weeks ago!" Now completely awake, I found this news to be both amazing and just a little embarrassing – this kid had done in six months what had taken me three years to do.

"Well, Karl, I had a day off from school, and I have been studying for at least two weeks now, so I decided to give it a try." He decided to give it a try, I thought; no denying that the kid had plenty on the ball.

"Well that's just great, it's fantastic, actually. I gave you your Novice not more than six months ago. Congratulations! Not many hams can beat that; not bad for a converted CBer."

He signed off and I turned over in bed, not to sleep, but to think on his brief career in ham radio, which had been nothing short of astounding. I felt more than a little satisfaction and pride. He had done the work, of course, but I had been lucky enough to provide the proper guidance and to help send him on his way.

It had started one evening, while listening on the Chicken Band (our local nickname for CB). Amid the usual strange chit chat and madeup calls, something had aroused my interest. There, he was back again. "Yes, Little Chicken, and Red Hen, this is KBC 1234 (I can't remember the exact call). I was just saying that CB is OK for some things, but everything I've heard about ham radio makes me think that it's a lot more fun, and interesting too." I couldn't agree more, I thought; let's hear more. "All the things I've heard about it sound real neat, like talking to other countries, using Morse code – I still remember that from the Scouts – and even building or fixing your own gear. You can use hundreds of Watts and not worry about the FCC. It sounds like a great hobby, but it's hard to get started. I sure wish I had someone to help me out. It's like the difference between flying a kite and flying an airplane." Not a bad analysis, and he was right. CB does have its worthwhile uses, if the legitimate stations can get out from under the cacaphony of QRM from all those "Little Chickens" on the band.

I broke in, using W5EWF's CB call and rig (which I had been testing), and asked him to drop over to my shack that afternoon, to get that help he was looking for. Expressing surprise and thanks, the young man said his name was Ken and that he lived just around the corner from my house. That was my first and last CB contact, for that rig was sold the next day, W5EWF having despaired of the way the band had developed since its early days. That one contact made for a happy result, however: the addition of a bright, talented and very enthusiastic new ham to our fraternity.

Ken was right on time for our first meeting, and I quizzed him on his background, so I would know where to start. As it turned out, he had a good start, having retained all of his Boy Scout Morse code (at a speed of about two words a minute), and having studied basic electronics in high school. All he needed was exposure to actual ham radio, as well as guidance in his studies. He went off clutching copies of "How To Become A Radio Amateur" and "The Radio Amateur's License Manual," not to mention several copies of *73*. An hour of twenty meter phone seasoned with the forty meter Novice band had whetted his appetite.

Before I knew it, I was giving Ken his Novice test. Naturally, he was nervous, and he wrote hunched over the forms, in intense concentration. After it was over, I could not help but notice that the answers (which I had accidentally seen) were all correct. Although I reassured him, Ken was anxiously waiting for the mailman for the next month or so, calling me up every other day (after three weeks had gone by), wondering if such a long delay was normal.

Then one day, Ken came running up as I shoveled snow in my driveway. Giving the last shovelful a heave, I straightened up and greeted him.

"I made it!" he shouted. "I'm a Novice, I'm a ham!"

"That's great, Ken – but I knew you'd make it. What's your call?" I wondered how far down the list they had gotten.

"I'm WN9QDL!"

"Well, WN9QDL, why don't you hustle on over to your QRP Heath rig and I'll work you." Snow shoveling really never excited me that much anyway, I thought, as I headed for the shack.

One thing led to another, and one day about mid-April, the new Novice became a new Technician, and then (after borrowing some of my code tapes and a little technical advice on theory and its practical application), guess who was a General? I was only a little bit surprised at that, for Ken had been working hard. We put up some improved antennas and I loaned him my rig so he could try phone for a while, and got almost daily landline reports on how he was doing. It seemed to me that the thrill of being off the limited Novice bands would kind of slow down the climb up through the license grades, while he concentrated on making lots of contacts. Well, I was sure wrong on that score. His radio library had been steadily expanding to the point that I was sometimes borrowing books from him, and they were all well used when I received them – he had been studying.

So now Ken was an Advanced class ham. As I got dressed, I counted the months since he had received his first call – six months, to the day. Perhaps there were more good potential hams marking time on CB; a little encouragement might be all that would be needed to find them and bring them into the hobby. I resolved to listen in on 27 MHz some more. Just then, the telephone rang again, interrupting my thoughts. It was Ken again, asking to borrow my 21 wpm *73* code practice tape; he said he's just started working on his amateur Extra and his records only go to 18. Hmmm, I wonder if he can help me with my code – maybe I'll get that Extra class myself!■

by Wayne Green W2NSD/1

I/O EDITORIAL

ATLANTIC CITY!

The Trenton computerfest last spring was such a remarkable success that another computer convention in the same general area was organized . . . this time by a group of three hams . . . and in Atlantic City for the end of August. They named it Personal Computing '76.

PC-76 was a success by any measure. There were over 75 exhibitors and over 3000 attendees (at $5 to $7.50 per head). Judging from a show of hands at my talk (the room was jammed full and several hundred were turned away at the door), and from the number of people who came to the *73 Magazine/Kilobyte* booth, about one third of those present were hams. Since the computer hobby is duck soup for hams to get into, I suppose I shouldn't be all that surprised.

This was the first public announcement of the coming of *Kilobyte Magazine*, and I was most gratified by the enthusiasm. A very simple explanation of the need for *Kilobyte* was that I wanted a computer hobby magazine that *I* could understand. An awful lot of people agreed with me and signed up for subscriptions to *Kilobyte* . . . about three times what we've ever done with *73* at any ham convention! More surprising was that 75% of them signed up for three year subscriptions . . . and the first issue won't be out until December.

MITS was there with their latest equipment set up and running. A few of the firms didn't show up . . . Imsai let their dealers do the showing . . . Sphere had one dealer there with a unit. Quite a few new manufacturers of small computer systems showed up and won converts to their hardware. It was an exciting convention.

I got into my usual troubles. A few days before the convention I got a request from the group running it to tape the technical sessions. There were going to be as many as five going simultaneously and they couldn't handle it. Hmm . . . I'd have to get some more cassette recorders and have at least five people there to make tapes . . . plus a couple more to sell subscriptions at the booth. It would be expensive, but it would be good PR. A man in the booth would probably be able to sell an average of $600 per hour in subscriptions, and Big Bill Edwards, our advertising manager, sells about $20,000 per hour in advertising during a show like that.

The idea was for us to tape the talks and then make copies to be given to computer clubs for use during meetings . . . and to sell additional copies of the tapes at $4, which wouldn't really pay for the effort, but would help take some of the sting out.

All went well for the first three hours . . . then came the word . . . no more taping. I gather that one of the computer hobby magazines made a big complaint about it and all of the money that *73* and *Kilobyte* would make out of the deal. I was angry . . . and delighted. A lot of people and clubs would miss first rate talks as a result of the politics, and that was irritating. I was glad because it saved us an awful lot of work and expense . . . probably for little return of any kind.

It was a pity, since *73* is so well set up to handle this type of thing. The tough part is having enough people to make the tapes . . . and then editing them down a bit to fit a one hour cassette . . . from there on it is easy . . . except for the sales or distribution. This means letters to clubs, handling orders, keeping records. And the sales of cassettes means writing ads, having them set in type and published (a page ad in *73* is not cheap . . . over $1000 these days), so anything advertised *has* to sell and sell well.

Last year at Dayton I tried to set it up so that we could tape the more interesting talks, only to have an RTTYer put in a very loud protest at "commercialism" . . . he would tape for *free*. As far as I know he taped one lousy talk and very few people ever got a copy of it – while thousands of ham clubs were prevented by him from having very interesting material for meetings . . . and the Dayton Hamvention missed out on a way to get fantastic publicity both via the audiences of thousands of clubs and via ads for the tapes in *73*.

A lot of people go to conventions in order to hear the talks, and a lot more would if they were exposed to more. And one of the most frustrating things at a convention is to have two sessions going on at the same time, neither of which can you bear to miss! I noticed that the Boston convention had their talks taped by a commercial outfit and the tapes were being made available for considerably more than *73* would charge. I do think the idea is a good one, but the cost should be kept down to ham levels and not just be a way for some commercial outfit to make a big killing.

Outside of the taping brouhaha, the incredibly miserable hotel, the

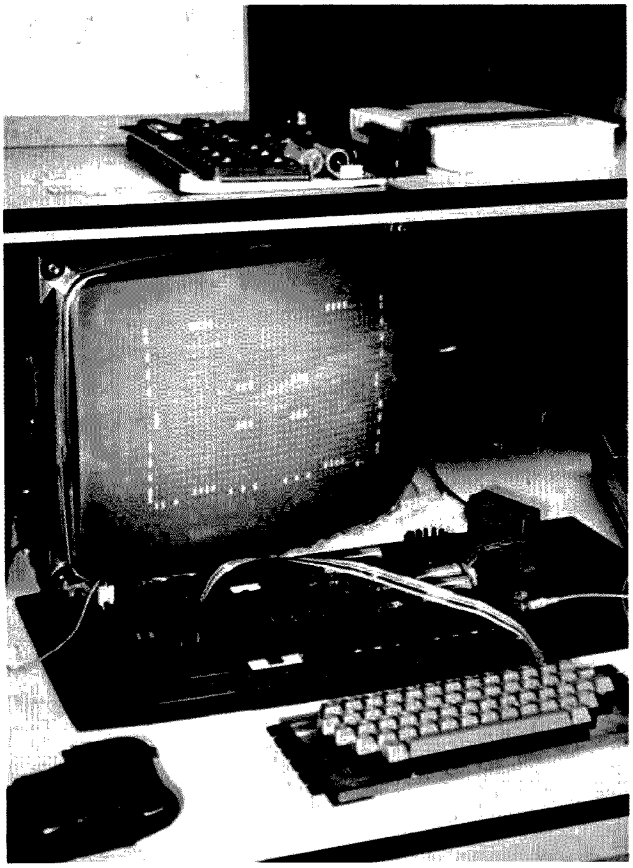

Here's the Apple computer system up and running a game of Life. Note the tiny cassette I/O board at the right! This is a complete computer and video generator, all on one board. Any wonder there was a lot of interest in this system at PC-76?

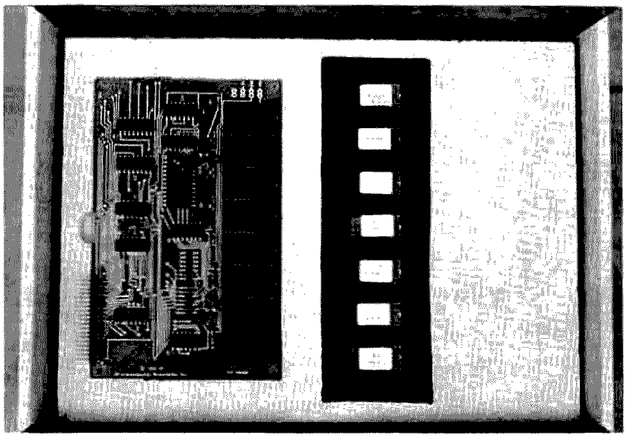

The Jolt 2K PROM board is shipped in a plastic foam package inside a carton, complete with detailed instructions. The PROMs are shipped mounted on conducting foam, to be plugged in after receipt. Jolt sells their boards in kit form or assembled. Their 1K assembler is supplied on four PROMs . . . not a bad deal for under $100 including PROMs.

Jimmy Chiang checks out Sphere boards after final assembly and debugs them.

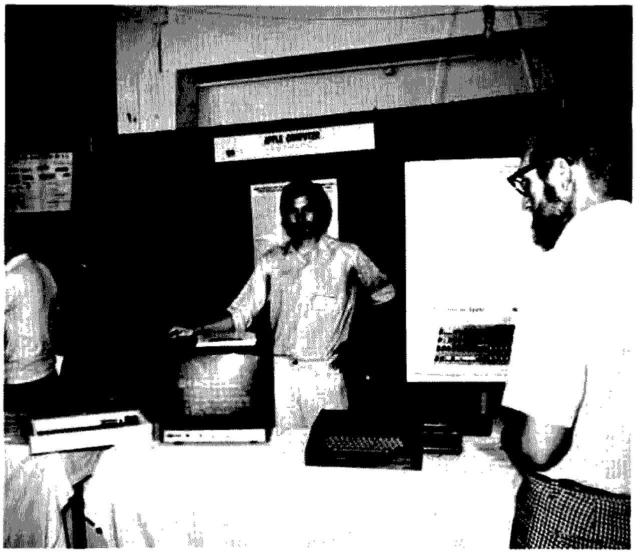

This is Steve Jobs, the president of Apple and the chap who designed the system. How many twenty year old computer designers do you know with their own manufacturing firms?

sauna-like atmosphere much of the time in the convention hall . . . it was a resounding success. Atlantic City is difficult to get to . . . too far from any large airport for many exhibitors (a great portion came in from California). The boardwalk and amusements were tacky, but if you have a chance to get into a penny arcade (they are 25¢ now) don't miss the computer games they have for you. You'll find yourself jumping around and screaming with delight at the tank game or the dogfight flying games. These are expensive, but worth it. We found one arcade where eight people could play at once, each driving his own tank and shooting at the other seven. The games are quite sophisticated, so be sure to give 'em a try the next time you see one.

These arcade games are just a hint of some of the goodies coming for home computer use. The new six game television toys are now on the market and are fun (under $60 some places . . . Unisonic), but they are simple compared to some of the microprocessor games that are coming. The arcade games use an F8 Fairchild microprocessor and are run by software. It won't be long before those programs are available for computer hobbyists.

I/O A WINNER

A large percentage of the hams at the Atlantic City computer convention and sauna said that the I/O articles in *73* had been their introduction to hobby computing. The fact is that aside from interesting the people already in the computer industry in going into their work as a hobby, there has been little effort so far to attract outsiders to hobby computing.

One big problem is that, other than the material in *73*, there has been practically nothing published which is understandable to the beginner. The series of articles which ran in *73* introducing newcomers to the world of computing have been gathered into a book called *Hobby Computers Are Here*. This is being sold through radio stores for $4.95 by *73 Magazine*.

The computer hobby magazines have gotten into the hands of people who are more interested in esoteric articles for professionals than in helping novices come up to speed in this difficult field. *Kilobyte Magazine* promises to help solve this impass by publishing a high percentage of articles written for the beginner . . . and further, there will be a glossary of the technical terms and buzzwords in each issue.

73 has so far withstood the temptation to try and promote the I/O section of the magazine to computer hobbyists. While this would make for better results for I/O advertisers, it might be somewhat detrimental to ham advertisers, since only about 25% of the computer hobbyists are into hamming so far. This may change. The current issue of *Computer Notes*, the official publication of MITS, has a lengthy editorial on the benefits of amateur radio for computerists . . . and president Ed Roberts is hard at work aiming at a General ticket as soon as possible. Perhaps the two fields will grow even closer together.

VISITING

During August I made a quick trip around the country to see how the hobby computer industry was doing . . . and to update myself on the similar trip I made the year before.

My first visit was to Ray Holt and the Jolt computer. This is an interesting development, and far too little has been written about it. Ray has agreed to explain some of the interesting ideas he has built into the system in an article for *Kilobyte*. I suspect that Ray would be a whole lot busier if more people understood what he has done with the Jolt.

Next was a visit to Imsai. They'd just moved to a new and larger plant, but refused to let me see anything or take any pictures of the operation. That's the first time I've ever run tino anything like that and I didn't know what to make of it.

Apple Computer was a surprise . . . a corner of a garage in a home. Steve Jobs, twenty years old, designed and built the system with programming help from friend Steve Wosniak. He has some remarkably good ideas in the system and I was very impressed. I strongly suggested that they pack the system off to Atlantic City for the PC-76 show coming up. They did, and Steve came back with a bunch of orders and dealers (about 40 orders, I believe) . . . not bad! He's going to have his hands full as his company grows rapidly. Steve has promised an article on his design for *Kilobyte*.

Todd Anderson of Byte Shop #2 has promised an article on the Z-80 computer system the Byte Shops will be manufacturing soon. Todd is giving classes on the fundamentals of computers, and has promised articles for *Kilobyte* on the same subject.

One of the really exciting visits was with Bill Godbout in Oakland. He sells an incredible amount of ICs and associated parts. His warehouses are piled up to here with stuff . . . and any ham

Continued on page 173

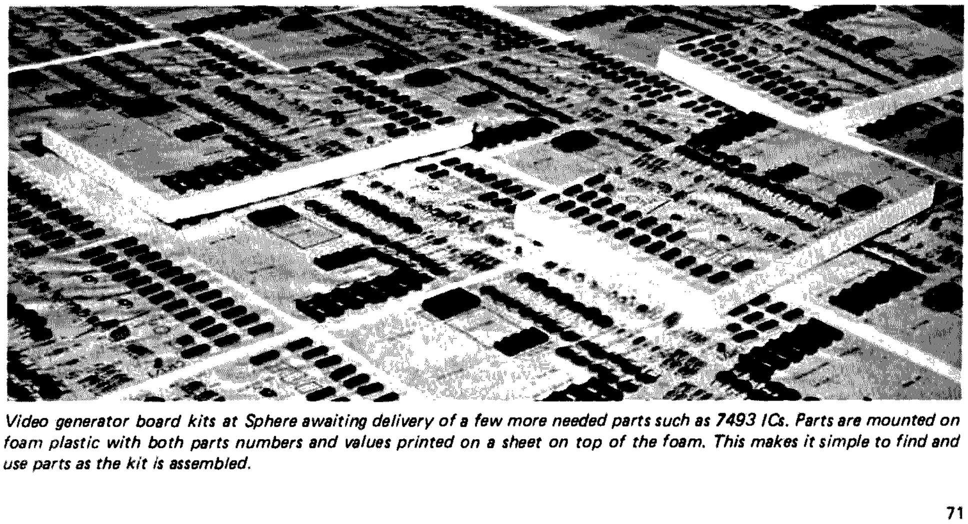

Video generator board kits at Sphere awaiting delivery of a few more needed parts such as 7493 ICs. Parts are mounted on foam plastic with both parts numbers and values printed on a sheet on top of the foam. This makes it simple to find and use parts as the kit is assembled.

by John Craig

I/O REPORT

PERSONAL COMPUTING '76

We just returned from Atlantic City NJ after a tremendous weekend at one of the best conventions the hobby community has had yet. The convention was sponsored by the Southern Counties Amateur Radio Association of New Jersey, Inc. The whole thing was practically a three-man show, with the bulk of the work and coordination being done by John Dilks K2TQN Dave Jones WA2AML, and Jim Main WB2UON With over 3,000 in attendance, you can bet these three gentlemen (and their associates) had their hands full!

About the only thing I found lacking were booths set up for individuals to display their systems. Since ham radio is one, if not *the*, area which has found some truly interesting applications for microprocessor systems, it would seem there could have been some fascinating exhibits set up by local hams. Needless to say, an adjustment to the $100 fee for a booth would be necessary before many folks would even consider bringing their systems to Atlantic City for just show.

KILOBYTE

Personal Computing '76 provided the "launching platform" for our new magazine, *Kilobyte*. (As you probably know, the publisher of *Kilobyte* is also the man who started *Byte* magazine . . . and it turns out he has a neat sense of humor when it comes to such things as magazine names!) The *Kilobyte* booth was one of the most popular at the convention and I'm not sure if it was because we had some of the most interesting merchandise on display or because we had some of the most interesting (and cute) young ladies behind the counter! Besides the *Kilobyte* subscriptions (which were being bought left and right), we had recent back issues of *73*, computer and ham books, code tapes, and much more. We also had a *Kilobyte* drawing for a Windjammer cruise for two through the Caribbean. Byron Young of Pasadena TX was the lucky winner of that little jaunt.

One of the questions we heard most concerning *Kilobyte* was, "What is it going to provide that the other magazines don't?" It's for sure we'd be spinning our wheels if we didn't have plans for *Kilobyte* to be unique and special. One of the things we will definitely be providing through the pages of *Kilobyte* will be articles dealing with both hardware and software for the beginner. Now, stop and think about that for a moment: There are hardware types *and* software types in this computer "business" and it's very seldom that a person is well-versed in both areas. If you're one of the hardware group who enjoys designing and building state of the art circuits, it's very likely you have a lot to learn about the programming end of things. And, if you're a top-notch programmer, you probably have a lot of questions about the hardware end. (Heck, you might even have those questions if you're a mediocre programmer!) Then, of course, there's the poor guy just getting started in this whole mess who doesn't have much to carry him through except determination and a keen desire to learn.

These articles are going to be just what you've been looking for. We're not going in for straight tutorial material . . . instead, you'll be reading articles which have good practical examples we can all relate to, and good, useful, practical applications.

Kilobyte will also be covering applications in both the home and small businesses (and you can be sure that a lot of these "hobby" efforts are going to be shifting over in the direction of developing small business systems). You can be just as sure of keeping up-to-date on developments in this area through *Kilobyte*.

We're looking for programs for the *Kilobyte Software Library*. This is going to be *the* place for getting applications programs, games, educational programs, diagnostics and other software for making your home system something more than just an ol' light blinker. It's going to be a fantastic deal for you, the programmer, because you will have a means of marketing your programs and being paid a royalty on each copy sold. (These programs are going to be distributed throughout the country at computer stores, as well as being advertised and sold through *73* and *Kilobyte*.) It's going to be great for *everyone* because we'll finally have somewhere to go for the software we've all been craving!

PETERBOROUGH, NEW HAMPSHIRE

After the Atlantic City convention, I drove up to New Hampshire with *73*'s computer engineer, Jim Muehlen. This was my first trip to the northeast and I'm still in a state of shock over the fact the toll road charges we paid during that trip were almost double the cost of the gasoline!

Looking at the brighter side of things . . . let me tell you about Peterborough! It's a truly beautiful and quaint little New England town with some of the friendliest people you'll find anywhere. And, if you're ever passing through around eatin' time, be sure and stop at the *Folkway Restaurant* for some fine dishes (and some unusual company . . . such as Carl Helmers, the editor of BYTE).

The group at *73* is a sight to behold, also. Some wonderful and dedicated people put together this magazine you all enjoy so much. The house in which all this takes place is a 200 year old mansion which has more rooms than any one man could count in a lifetime. It's a beautiful place with a lot of atmosphere, and if you ever read one of Wayne's "ads" for help up in Peterborough, *you could do worse than to answer it.*

STEVE CIARCIA'S VIDEO GAME ARTICLE

The October *73* had an article by Steve Ciarcia entitled, "Hey, Look What My Daddy Built!" It described the construction of a video game using the 6 game AY5-8500 chip manufactured by General Instruments. It seems there aren't too many places where one can get hold of this chip. He (Steve) has been deluged with requests on where to get it, and the phone at *73* hasn't stopped, either. We've been told that the chip is available for $39.95 from Advanced Micro-Computer Products, P.O. Box 17329, Irvine CA 92713. The latest Heathkit video game (released in October) uses the same chip and sells for $49.95.

NEW PRODUCT REVIEW

Oliver OP-80A Tape Reader

The OP-80A "high speed" paper tape reader is probably one of the least expensive and easiest devices you're going to run across for getting programs into your computer. Unlike most other paper tape readers, you won't have to worry about mechanical repairs and alignments . . . since the movement of the tape is accomplished by pulling it through the reader. Then, on the other hand, you're not going to

Continued on page 121

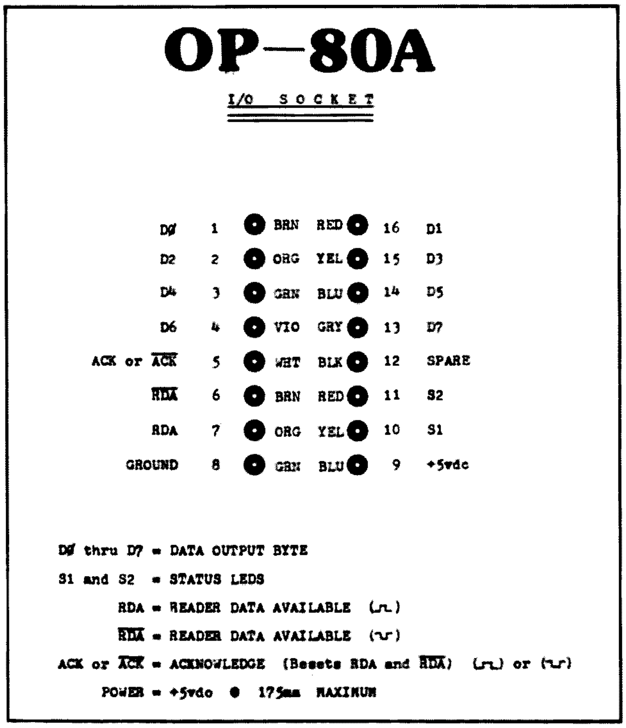

Louis I. Hutton K7YZZ
12235 S.E. 62nd St.
Bellevue WA 98006

A Ham's Computer

-- CW/RTTY the easy way

For several years I have experimented with, built, and operated different items of SSTV equipment. From that experience I tried my hand at building an all solid state RTTY TVT which was recently described in *73 Magazine*.[1] In monitoring ham RTTY transmissions on the West Coast, it was noted that the subject of microcomputers and their application to ham radio was being discussed in increasing frequency. My curiosity was aroused about this new development in ham radio.

I was fortunate in being able to visit Dr. Robert Suding WØLMD several times during business trips, and observed the development of the microcomputer that is now marketed by The Digital Group of Denver, Colorado.[2] For my "hands-on" experiments in microcomputers, I purchased their type 8080-4BD kit. I feel that I was probably like other hams and did not have the slightest notion of how this thing worked, but figured to just jump in and have a go at it. I must say it has been a very interesting project. I am slowly learning to live with the new system and to use it in some practical applications.

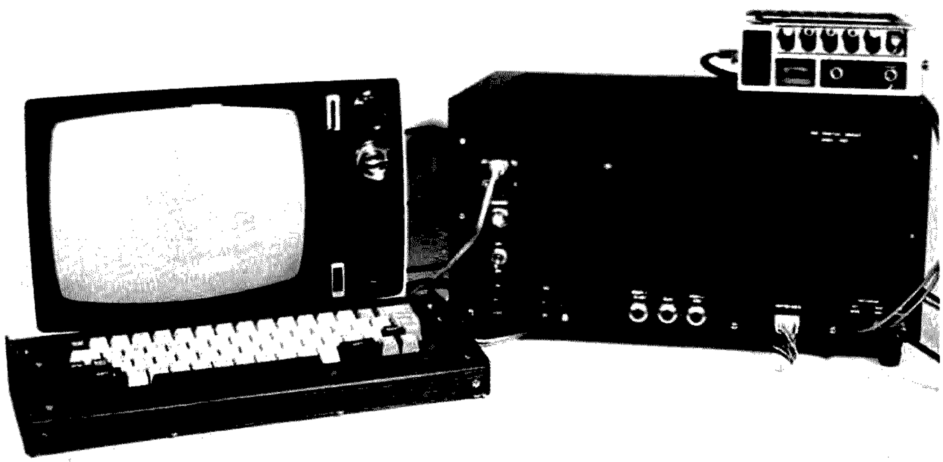

System Description

The 8080-4BD system as shown in the block diagram consists of several PC boards and the components that must be mounted on the boards. This includes the standard mother board, a CPU board with 2K of memory, an 8K memory board using 2102 ICs, a video display and cassette interface board, and a 4-port parallel I/O board.[3] The mother board will accommodate two more 8K memory boards and three more 4-port I/O boards. Low profile sockets are used for mounting all ICs. An unmounted surplus keyboard with ASCII encoded output was also purchased from The Digital Group.

A 12 inch transistorized black and white TV set was used for the video display. The display consists of 16 lines of 32 characters per line. For the cassette "Read" and "Write" modes, I use a Superscope Model C-104 as recommended in the technical literature that accompanies the kit. Power supplies in both kit and assembled form are available from The Digital Group, but I chose to build my own. The cabinet for the mother board, PC boards and power supply was salvaged from an old obsolete tube transmitter. I also fabricated a cabinet for the keyboard assembly. The TV set was modified to accept video input from the computer.

Included in the parts from The Digital Group is a prerecorded tape cassette that is used to initialize the system and to test out the memory card. It also has a game program, a program to make the unit act as a digital counter, a bicentennial demonstration program, and a ham CW and RTTY program. The bicentennial program on the tape prints an American flag on the TV screen to the accompaniment of *The Star-Spangled Banner*. As Dr.

Suding says, "So what else would you expect in 1976?"

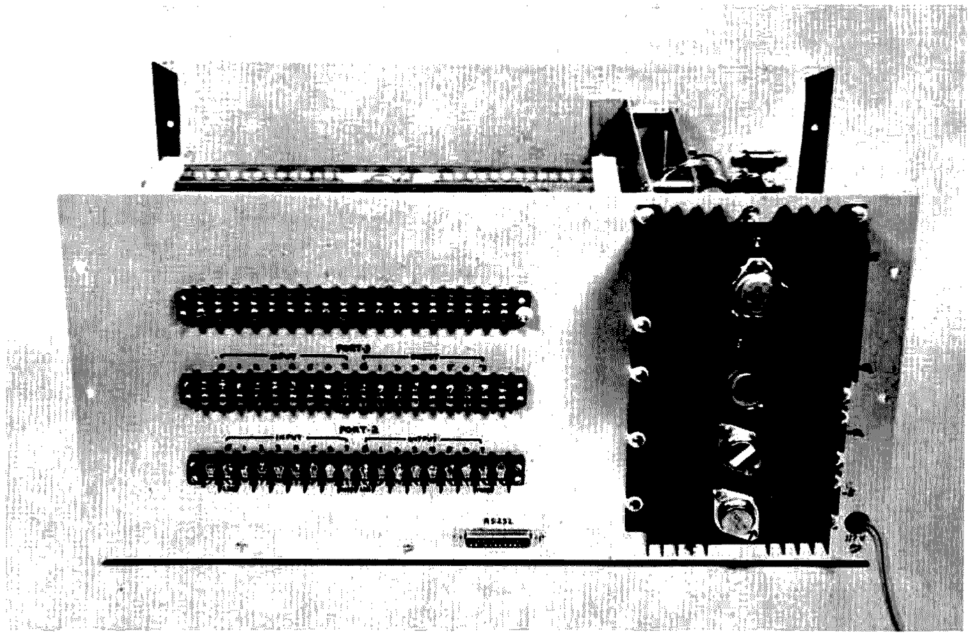

Assembly of the System

It is stressed in the data furnished with the kit that the builder should have some experience in building electronic equipment other than assembling detailed kits from Benton Harbor. The data does not give that kind of step-by-step instructions. The quality of the PC boards is first class, with gold-plated connector contacts and double-sided boards with through-plated holes. General instructions on how to assemble each PC board are given, with a description of how the circuit works. A schematic diagram is furnished for each board, along with a general parts layout for that particular board. Testing and troubleshooting information is also furnished in the data package.

In assembling my system, I discovered one board that was missing all the bypass capacitors. They were immediately replaced when The Digital Group was advised of the shortage. Another board had one low cost IC missing which I replaced from my junk box. Another board had one extra IC in the kit. After the unit was finally assembled and ready to test, I ran into several bugs. The characters on the video monitor were not complete, and it looked more like a foreign language than English. I found, after consultation with Dr. Suding, that I had a bit missing on the data lines going into the video board. This was determined to be caused by a lack of through-plating in one of the holes in the mother board. The next bug was that a portion of the dot structure was missing in the characters being displayed. This was found to be caused by a defective Motorola (MCM 6571L) character generator chip which was promptly replaced (once again) by The Digital Group. The last bug was that the encoder chip (TI TMS-5000) in the keyboard had to be replaced (as one row of keys was dead). With those bugs out of the way the system worked as designed.

The power supply shown in the diagram was homemade, and provides all the voltages required at the specified current loads. I had to salvage an old 6.3 volt 20 Amp transformer and rewind it with a new secondary for the high current 5 volt load. A second winding was also added for the +12 volt line. The crowbar circuit was added to protect all those expensive ICs on the memory and CPU card. Discussions with Dr. Suding indicated that anything less than 50,000 uF in the 5 volt power supply filter might lead to unwanted noise problems. I located just what was needed in a local surplus store and ended up with a 55,000 uF unit.

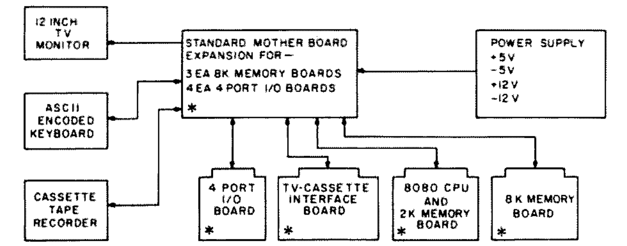

*Fig. 1. Block diagram of microcomputer system at K7YZZ. *Items basic to the 8080-4BD kit.*

The cabinet for the computer is 18½ inches wide by 9 inches high by 12 inches deep. I cut two large square holes in the top and riveted in a perforated grille for better circulation of cooling air. A 4 inch fan is mounted on the compartment divider bulkhead between the power supply compartment and the PC board compartment. The air is directed over those warm memory chips. I have had no problems with overheated ICs. The MPC-1000 5 volt 10 Amp regulator is mounted on a very large heat sink on the back bulkhead, out in the open air. This way it does not dump its heat into the unit.

The 12 inch TV set was modified as per a TV typewriter article in *BYTE Magazine.*[4] The level of the video signal from the computer was more than the TV set could handle, and required additional line loading before the set began to display the signal on the screen at an acceptable brightness and contrast level. The builder should *not* use a TV set that does not have a power transformer providing power line isolation. Be sure that the set does not have a "hot" chassis with series string heater tubes. That type will really fry the ICs in a computer.

I found that when playing the cassette into the computer I could not monitor the audio signal, so I modified the recorder by adding a 100 Ohm resistor across the output jack switch contacts so that the speaker was in the circuit even when an audio line plug was connected to the recorder output. It is convenient to monitor the mark frequency tone as the program playback begins and ends.

Initial Test

When power is applied to the system there should appear on the top of the TV screen "Read 8080 INITIALIZE Cassette." If this message appears, all is well. The first program on the audio cassette furnished with the kit is loaded in the recorder. At the start of the mark frequency tone the "Reset" button on the com-

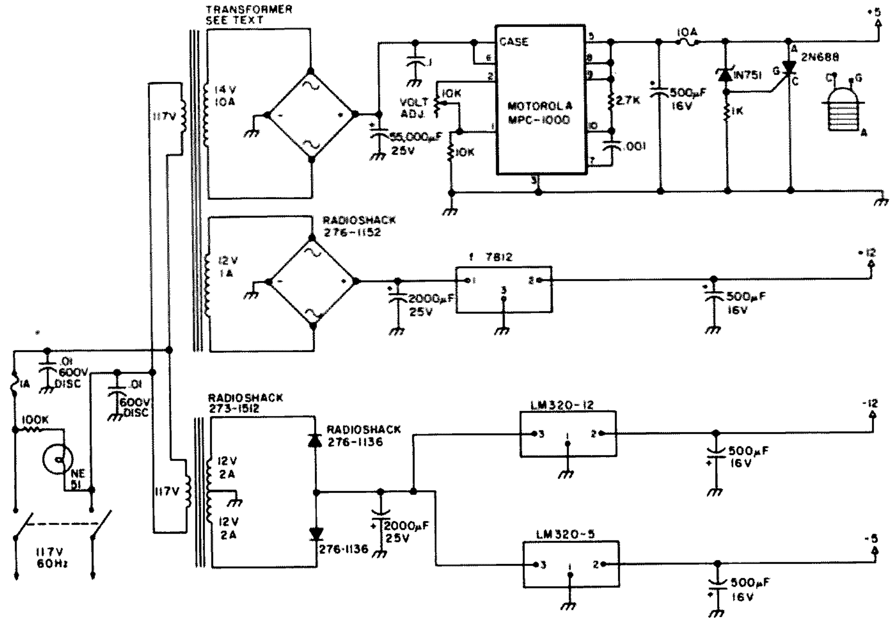

Fig. 2. Power supply for The Digital Group 8080-4BD.

puter is depressed for a moment. The computer then begins to accept the digital data recorded on the tape. As the data is loaded into the computer, the TV screen will display lines of a running series of numbers beginning with 1 through 7, and back to 0 through 7, until the program is loaded. This represents each page of program data being loaded into memory. At the end of the program tape, the mark tone will return and the screen will display "8080 OP SYSTEM" and the options. Selecting item 4 of this listing (hit key 4) will permit the operator to begin generating a program from the keyboard beginning at page 6. Program development using this tape will be in the octal code format. Other prerecorded programs on the tape, such as the "Memory Check," are used to determine if all of the memory ICs are OK. The tape for that program is loaded and key 6 is depressed. The TV screen goes blank until all the memory chips are tested. Then, if all is OK, an alpha sign appears in the upper left hand corner of the screen and another run is automatically begun. Each successful test provides another alpha figure on the screen. For the 2K memory the check time is just a few seconds; for the 10K memory it takes about a minute to run the test. If a defective memory IC is located, it will stop the test and print on the TV screen which IC is defective and on which circuit board the IC is located. This really works, as I tried some known bum chips and it located them very promptly.

At first I was very apprehensive about pushing that "RESET" button, or switching off the power to clear the memory for a new program entry, but after a while I found that it did not damage the machine. I became more confident of the machine and its operation.

Operation

The Digital Group has established a branch called The Digital Group Software Systems, which supplies cassettes of games and other items, such as a Tiny BASIC Extended.[5] I obtained all the games (that are available to date), including the Tiny BASIC Extended. Most of the games are written in Tiny BASIC and must have the Tiny BASIC program loaded in the computer before they can be played. The machine is turned on, and when the initialization statement appears on the TV screen the Tiny BASIC tape is loaded. Then the selected game tape is loaded by keying 1 on the keyboard when the mark tone appears at the beginning of the tape.

The blackjack game is fun to play, and some of the locally trained (Las Vegas) experts tell me it is a very well written program. It has all of the game's rules well executed. I condensed all of my games onto two tapes. I recorded the Tiny BASIC program at the beginning of each tape and then recorded around 10 to 12 games on each tape. There is still plenty of tape left for additional games. The magnetic tape cassettes are of the 30 to 46

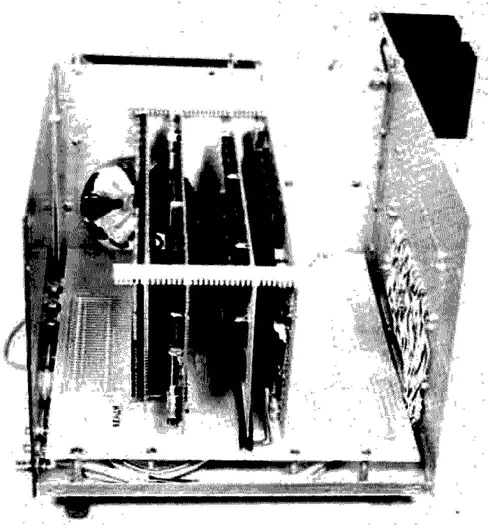

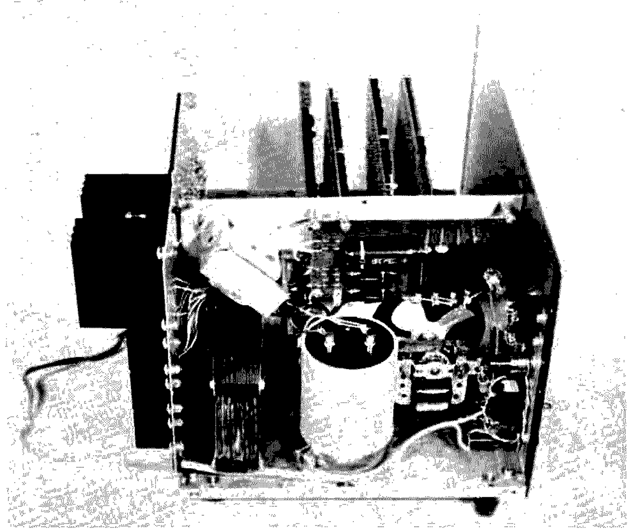

minute type. Longer tapes are too thin to make good recordings of digital data.

A new ham cassette is in the works at The Digital Group Software Systems[6] and will have expanded capability for both sending and receiving CW and RTTY (with up to 8 storage slots of 100 characters each).

I have had some success at trying to program some games using the Tiny BASIC Extended. (Incidentally, the Tiny BASIC Extended does not have floating decimal or square root math capability.) I feel that these programming efforts have been the most informative and effective way to learn just what you can and cannot do with the machine. Also, you can be sure that it will tell the operator when he has goofed, in no uncertain terms.

Conclusions

The construction of the microcomputer turned out to be no more difficult than most SSTV construction projects. The biggest problem is acquiring an understanding of the machine and learning the Tiny BASIC Extended language. Computer terminology is almost like listening to a foreign language. I can assure the reader that after continued exposure to this new technology the terms and functions will begin to make sense. I should also like to warn the reader that this machine is addictive. You will find yourself sitting in front of that keyboard for hours trying out first one thing, then another. It is absolutely fascinating. Try it, and see for yourself. ■

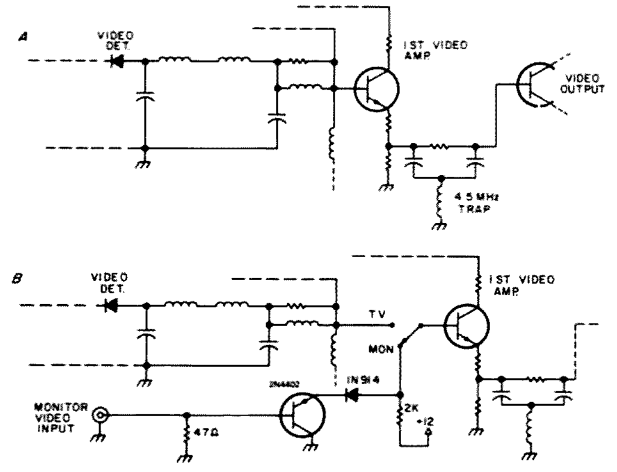

Fig. 3. (a) TV circuit before modification. (b) TV circuit after modification.

References

1 "Build This Exciting New TVT," Louis Hutton, *73 Magazine*, March, 1976.

2 The Digital Group, PO Box 6528, Denver CO 80206.

3 The cost breakdown for the system's major components is as follows: 8080-4BD four board system with 10K RAM – $625; TV set (new K-Mart unit, 12 inch solid state) – $69; surplus keyboard with ASCII output, less cabinet – $49 (plus chip, $10); tape recorder, Panasonic SUPERSCOPE, model C-104 – $119; power supply, cabinet, fan – junk box surplus.

4 "Television Interface," Don Lancaster, *BYTE Magazine*, October, 1975.

5 The prerecorded cassette programs and games are sold by The Digital Group Software Systems, Inc. The game cassettes with software are $5 each. The Tiny BASIC Extended program with software instructions is $5. The Educator tape for the 8080 system with software instructions is $10. There is a Ham cassette with software instructions for $5. It provides Baudot RTTY send and receive, and also CW send and receive.

6 Digital Group Software Systems Inc., PO Box 1086, Arvada CO 80001.

Dr. Lance A. Leventhal
Emulative Systems Co.
138 So. Acacia Avenue
Solana Beach CA 92075

What's All This LSI Bunk?

-- an ostrich's eye view of the microprocessor

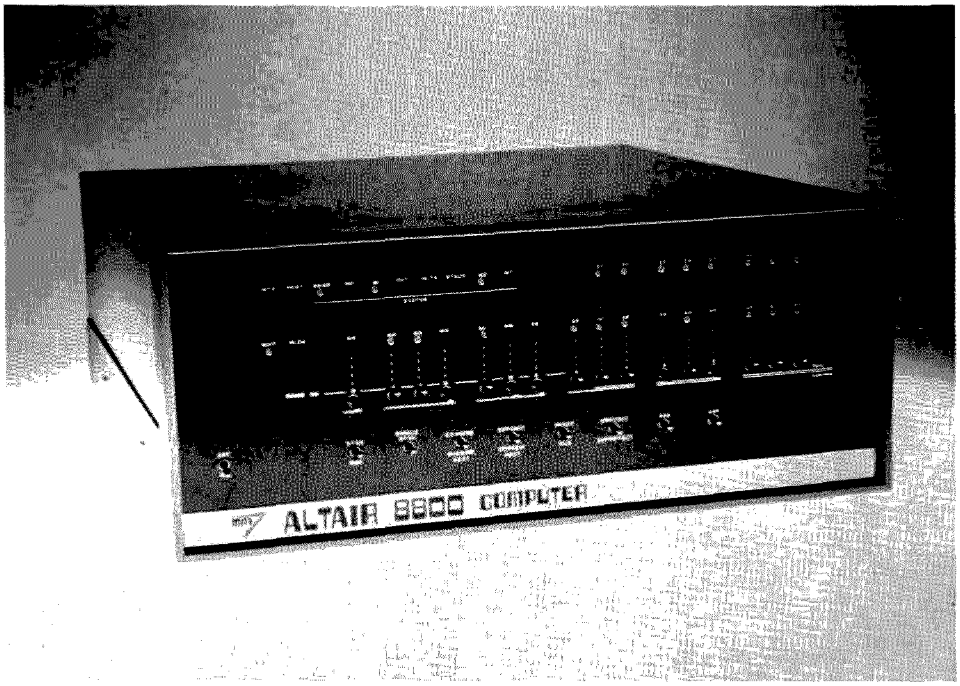

Fig. 1. The MITS Altair 8800, the first home computer (courtesy of MITS, Inc.).

Last year a small company called MITS introduced a new product that may eventually be as exciting as the first crystal radio, first FM receiver, or the first television set. The product was a computer in kit form that cost less than $500. Fig. 1 shows the completed version of the MITS Altair 8800. In this article we will explore how such inexpensive computers became possible and how we can use these new devices. The science fiction dream of a home computer has become real; already hobbyist clubs and stores that specialize in home computers have sprung up across the country. The world of computers, which was formerly only open to large institutions and specially trained experts, has suddenly become open to anyone with some time and some space in a house or garage.

Let's start at the beginning (last year!). How, in these days of 75¢ loaves of bread and $3500 Volkswagens, can a computer cost less than $500? In fact, prices for computers and such items as printers, television displays, and extra memory continue to go down. We can now buy computers and the devices that go along with them from many sources for prices that seem incredible.

The main reason for these developments is the emergence of large-scale integration (LSI) in semiconductor technology. Fig. 2 shows some of the developments in large-scale integration in the last ten years. Manufacturers can now place the equivalent of 10,000 transistors on a

piece of silicon less than a quarter of an inch square; this number has doubled each year for the last ten years and is likely to continue doing so for the next ten years. LSI has already led to the electronic calculator and the electronic watch. In the early 1970's, semiconductor manufacturers found it possible to place circuitry that would perform all the functions of the central processing unit (CPU) of a computer on one or a few chips. We call such computers on a chip *microprocessors.* Fig. 3 is a photomicrograph of the Motorola 6800, one of the most popular microprocessors; note the tremendous amount of detail present in a device with an area of less than one twenty-fifth of a square inch. Almost two years of work goes into the design and testing of such a device; however, once designed, the chips can be produced at the rate of thousands per hour for a manufacturing cost of a few cents apiece.

A Brief Historical Perspective

The main reason for the low price of hobby computers is the use of microprocessors. A microprocessor will fetch instructions from memory and decode them, accept data from memory or outside sources, perform arithmetic or logical operations and save the results in memory or send them to external displays or other devices. A microprocessor will thus do everything that a large central processor will do, even those which are the heart of enormous computers like the IBM 370, Burroughs 6700, or Control Data 7600. Yet the microprocessor is built on one or a few chips of silicon and costs only $10 to $100.

The microprocessor is an outgrowth of MOS LSI technology. MOS, metal oxide semiconductor, is the name for a device fabrication process which allows very complex devices to be placed on a single chip. The MOS LSI technology uses masking processes which we can compare to those used in photography. The manufacturing cost of MOS LSI devices, like the developing costs of photographs, is relatively independent of the amount of detail involved. The cost of developing a picture with a million precise details is the same, in terms of paper and chemicals, as the cost of developing a picture taken without removing the lens cap. Of course, the more detailed photograph requires a better camera, more attention to layout, and greater photographic skill; it is also less likely to turn out correctly. The production of complex MOS LSI chips is similar to the development of detailed photographs. Since the production cost of a complex chip is not markedly different from that of a simple chip, the more that can be placed on a single chip, the cheaper the overall system will be. Such a single-chip system will require fewer packages and connectors, less power, less labor, and a smaller amount of other supporting circuitry and equipment. LSI thus results in lower total cost if we can use the same LSI devices over and over again. LSI-based systems will also be smaller, cheaper to run, and more reliable.

MOS LSI techniques were first used to create compact, low power memories. In the late 1960's, these techniques were used to create electronic calculators; the first such devices were multi-chip systems which retailed for several hundred dollars but could do little more than today's $10.00 or $15.00 devices. Remember that just ten years ago the large mechanical calculator and the slide rule were the state of the art. In the early 1970's, the quickly changing calculator market made semiconductor manufacturers look for new ways to produce more general and more flexible devices which could be produced in large volumes

Manufacturer	Microprocessor Used
The Digital Group Denver, Colo.	Intel 8080, Zilog Z80, Motorola 6800, & MOS Tech 6502
E and L Instruments Derby, Conn.	Intel 8080
EBKA Industries Inc. Oklahoma City, Okla.	MOS Technology 6502
Electronics Product Associates, Inc. San Diego, Calif.	Motorola 6800
Gnat Computers San Diego, Calif.	Intel 8080
IMS Associates San Leandro, Calif.	Intel 8080
Infinite Inc. Cape Canaveral, Fla.	RCA COSMAC
Martin Research Northbrook, Ill.	Intel 8080
MITS Albuquerque, New Mex.	Intel 8080 Motorola 6800
MOS Technology Norristown, Pa.	MOS Technology 6502
Mycro-Tek Wichita, Kan.	Intel 8080
Ohio Scientific Instruments Hiram, Ohio	MOS Technology 6502 Motorola 6800
Pehaco Corp. Los Altos, Calif.	MOS Technology 6502
PCM Corp. San Ramon, Calif.	Intersil 6100
Polymorphic Systems Goleta, Calif.	Intel 8080
RCA Somerville, N.J.	RCA COSMAC
Southwest Technical Products San Antonio, Texas	Motorola 6800
Sphere Corp. Bountiful, Utah	Motorola 6800
Wave Mate Gardena, Calif.	Motorola 6800

Table 1. Manufacturers of educational and hobby microcomputers. Note: Many of the largest manufacturers of microprocessors and microcomputers are not included in this list because their products are intended for industrial applications.

and yet could be modified by the calculator manufacturers to meet new or custom requirements.

The first microprocessor, the Intel 4004, was developed for a calculator manufacturer. Although it was designed primarily for the calculator market, it was programmable; its actual functions could be changed by the calculator manufacturer rather than being fixed by the semiconductor manufacturer. The power of the microprocessor and its advantages over hard-wired design soon became evident to other industries. The first 8 bit microprocessor (the Intel 8008), directed largely toward manufacturers of computer terminals, was introduced in 1971.

The complete history of the microprocessor is thus only five years long. Already, though, processors are in common use which are a hundred times as powerful as the early 4004 and 8008; such processors can do more than could large computers of 15 years ago which cost (in uninflated money) over $100,000.00. Nor have we yet come close to reaching the limits of microprocessor performance; many of today's limitations will disappear as manufacturers continue to produce more complex LSI chips.

A Microprocessor Survey

Let's take a look at some of the existing microprocessors from the hobbyist's point of view. We will pay particular attention to those microprocessors which are widely used as central processing units in hobby computers.

Current microprocessors can be divided into three

First Memory Chips (256 bits)	First Multi-chip Calculators	First Single-chip Calculators	First Microprocessor (Intel 4004)	Intel 8080	Motorola 6800	
			1K Memory Chips	4K Memory Chips		16K Memory Chips
1966	1968	1970	1971	1973	1974	1975

Fig. 2. LSI developments from 1966 to the present.

basic categories:

(1) Calculator-like processors
(2) Standard, self-contained processors with a fixed instruction set
(3) Bit-sliced processors and others with a user-defined instruction set

The three categories include a wide range of computing power, speed, price, and application areas. Category 2 contains all of the microprocessors used in hobby computers. Therefore, we will briefly describe categories 1 and 3 and focus our attention on category 2.

Category 1, the calculator-like processors, contains the simplest and cheapest devices. Typical processors in this category are the Intel 4004 and 4040, Rockwell PPS-4, Texas Instruments TMS-1000, American Micro-Systems 9209, and National SC/MP. Many of these devices are much like calculators; they are often specially designed or have special instructions to handle keyboards and lighted displays and to perform simple decimal arithmetic. However, these microprocessors are user-programmable (unlike calculator chips) and can be used in a wide variety of applications. Besides advanced calculators, such devices have been used in character printers, games, household appliances, paper tape readers, test sets, function generators, counters, microfilm readers, telephones, tuners, valves, scales, cash registers, and time and attendance terminals. We may have hundreds of these devices in a single store, factory, or laboratory.

The devices of category 1 represent the smallest amount of computing power that can be purchased as a single unit. Complete systems based on these devices cost only $5 to $30 in large quantities. They are used mainly in applications requiring low cost, low speed, and relatively limited processing power. Such microprocessors are most often found in large volume applications as simple controllers for systems whose speed is limited by human interaction or slow mechanical devices. These processors generally have very short word lengths (most can only handle 4 bits at a time) and are thus unsuited to systems requiring complex calculations, high data rates, or great accuracy. Although these simple processors do not attract much attention from writers or researchers, they are still probably the most widely used in terms of volume because of their low cost.

We should note that computer speed is relative. We often call a computer slow if it can only execute 100,000 instructions a second! A large computer may be able to execute 10,000,000 instructions in that same time but the "slow" computer still seems to work at lightning speed to the average observer.

Category 3, the bit-sliced processors, are largely intended as building blocks for special-purpose computing elements. Typical microprocessors in this category are the National IMP, Intel 3000, Advanced Micro Devices 2900, Monolithic Memories 6701, Texas Instruments SBP0400, and Fairchild Macrologic. Unlike the devices in categories 1 and 2, the bit-sliced processors are not self-contained CPUs. Rather, they involve a whole family of elements including a 2 or 4-bit processor slice which the user must combine to form a CPU. Such a CPU will generally involve 30 to 50 discrete packages. These microprocessors are thus intermediate between the self-contained CPUs and the discrete circuitry that is currently used to make large computers.

Most of the bit-sliced processors are much faster than standard microprocessors, but significantly more expensive and harder to use. CPUs based on these processors typically cost $500 to $1500. Typical applications include disk controllers, minicomputer CPUs, test equipment, intelligent terminals, and signal processing equipment. In the near future, the bit-sliced processors may become the basis for most minicomputers. However, the cost and the number of elements required for a CPU will have to be significantly reduced before such devices can be used in hobby computers.

The main category of microprocessors with which hobbyists are presently concerned is category 2, the standard, self-contained processors with a fixed instruction set. These processors are intermediate in performance between calculators and minicomputers (i.e., between categories 1 and 3). They are complete CPUs on one or a few chips and require only a small amount of supporting circuitry. Prices range from $20 to $200 in single quantities (not including memory, I/O, or other system requirements). Most of these devices will handle 8 bits of information at a time, although a few can handle 16 bits at once. The most widely used microprocessors among hobbyists are:

Intel 8080 (the Intel 8008 is an older, less powerful version)

The Intel 8080 was the first device in this category to be introduced (in 1973) and is the most widely used CPU in hobby computers. It is used in the MITS Altair 8800, IMSAI 8080, and in similar sets from Martin Research and other sources. The Zilog Z-80 is an extended version of the Intel 8080 with a larger, more powerful instruction set and other extra features.

Motorola 6800

The Motorola 6800 is comparable to the Intel 8080 in performance (it was first introduced in 1974). It is used in the MITS Altair 680 and other hobby sets from Southwest Technical Products, Sphere, Wave Mate, and Ohio Scientific Instruments.

MOS Technology 6502

The MOS Technology 6502 is also comparable to the Intel 8080 and Motorola 6800 in terms of performance. It was first introduced in 1975 and is used in the JOLT hobby computer and others. The MOS Technology 6502 is somewhat cheaper than either the Intel 8080 or Motorola 6800, but not as widely used.

National PACE

The National PACE is slower than any of the previously mentioned processors and somewhat more expensive. It will, however, handle 16 bits of information at a time (the others handle 8) and has a more powerful instruction set. Systems based on this processor are available from Godbout Electronics and from Hamilton-Avnet (the Pacer).

Intersil 6100

The Intersil 6100 is a new device which executes all the instructions of the world's most popular minicomputer, Digital Equipment Corporation's PDP-8. The advantage of the Intersil processor is that a tremendous number of programs are already available for the PDP-8. Systems based on this processor can be obtained from PCM Corp. or Ohio Scientific Instruments.

Other processors in category 2 which may eventually be used in hobby computers include the Rockwell PPS-8, Signetics 2650, RCA CDP 1802 (COSMAC), Fairchild F-8, and General Instrument CP-1600. Table 1 contains a list of some manufacturers of hobby computers and the processors they use. A new entry in this category is the Texas Instruments TMS9900 which handles 16 bits at a time like the National PACE but is just as fast as the Intel 8080 or Motorola 6800. The TMS9900 is presently more expensive (about $200 in single quantities) than the other microprocessors mentioned above, but offers much more processing power.

Of course, the devices in category 2 have found many applications besides hobby computers. Among the more common are monitoring systems, line printers, navigation systems, business machines, test equipment, security systems, programmable terminals, plotters, oscilloscopes, machine tools, industrial-control systems, message switching units, graphics terminals, and medical instruments. These processors will probably continue to have the widest variety of applications in the near future.

Semiconductor Technologies

Now let's examine the characteristics of the semiconductor technologies from which microprocessors are produced. The importance of particular features will be described as well as technological trends that may be of significance to hobbyists.

The first question that must be answered is, "What characteristics are desirable in a semiconductor technology?" Some desirable characteristics are fairly obvious:

Low cost: If devices from a particular technology can be produced cheaply, the ultimate cost will be lower. Cost depends on the complexity of the semiconductor processes and on the amount of experience that has been acquired with a particular process. We should note that semiconductor prices vary widely and manufacturers' list prices often don't closely follow the actual prices charged by distributors or supply houses.

High Density: If more complex circuits can be placed on a single chip, fewer devices will be needed to perform useful functions. More complex chips are not usually much more expensive to manufacture, but require fewer packages, fewer connections, less board space, and less power than a larger number of simple chips.

Low power consumption: If the circuits produced from a particular technology require less power, they will need smaller power supplies, use less energy, and produce less heat. Devices that use large amounts of power will need expensive power supplies and special cooling mechanisms such as fans or air conditioning.

High speed: If the devices run faster, they can simply perform more work in a given amount of time.

Even these simple characteristics can't be easily combined – devices that run at high speeds usually dissipate a lot of power, for instance. Technologies that result in high speed also typically result in low density and relatively high cost. Tradeoffs will have to be made.

Other useful features in a technology that may not be quite so obvious include:

Compatibility with standard TTL circuitry: If devices made from a particular technology can be readily used with the standard 7400 series TTL integrated circuits, they can then be easily and cheaply interfaced to peripherals and other circuitry.

Ruggedness: If devices made from a particular technology are more rugged, they will be able to withstand temperature variations, moisture, power surges, noise, and shock. Devices that are vulnerable to various conditions will have to be protected by means of special circuitry or packaging.

Wide availability and support: Technologies that are produced by many suppliers and heavily supported will have more parts available, more compatible devices, and lower prices. Such a technology is likely to continue in use for many years.

Standard parts and large memories in the same or compatible technologies: Technologies that have such devices will be relatively easy to use in complete computer

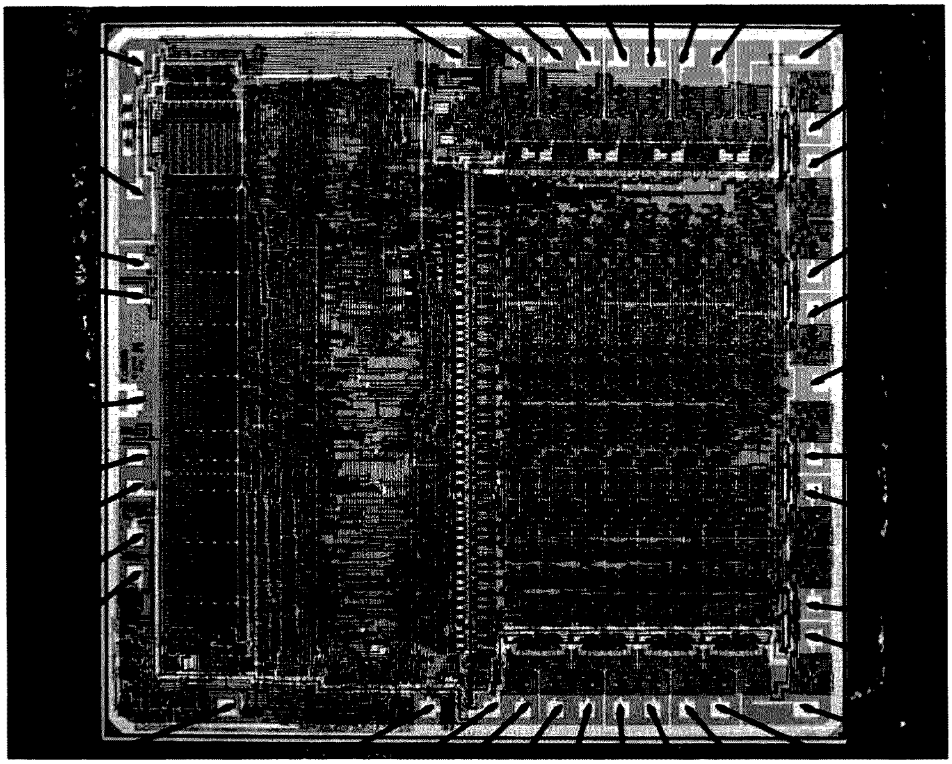

Fig. 3. A Photomicrograph of the Motorola 6800 microprocessor (courtesy of Motorola 6800 Semiconductor Products, Inc.).

systems.

Microprocessors are currently available in six different technologies:

PMOS (P-Channel Metal Oxide Semiconductor): the oldest MOS technology; high density and low cost but relatively low speed; not TTL compatible.

NMOS (N-Channel Metal Oxide Semiconductor): the present state of the art MOS technology; high density and moderate cost and speed; can be made TTL compatible.

CMOS (Complementary Metal Oxide Semiconductor): a technology widely used when low power consumption and high noise immunity are needed; medium · in density, cost, and speed; can be made TTL compatible.

Schottky TTL (Schottky Transistor-Transistor Logic): a variation of standard TTL that offers high speed, but high power consumption and cost and low density; fully compatible with standard TTL.

ECL (Emitter-Coupled Logic): A very fast technology that is very expensive and consumes a large amount of power; not compatible with TTL.

I^2L (Integrated-Injection Logic): a new technology that may ultimately combine the speed of TTL with the density of MOS.

A comparison of these technologies is shown in Table 2. Clearly, PMOS and NMOS rank highest in the important categories of cost and density, CMOS ranks highest in ruggedness and lowest in power consumption, ECL is the fastest, while Schottky TTL is the easiest to interface.

	PMOS	NMOS	CMOS	Schottky TTL	I^2L	ECL
Cost (1 = Lowest)	1	2	4	3	5	6
Density (1 = Most Dense)	2	1	3	4	4	6
Power Consumption (1 = Least)	3	4	1	5	2	6
Speed (1 = Fastest)	6	5	3	2	3	1
TTL Compatibility	No	Sometimes	Sometimes	Yes	?	No
Ruggedness (1 = Most Rugged)	5	4	1	3	2	6
Availability and Support (1 = Most)	4	3	2	1	6	5
Standard Parts and Memories (1 = Most)	4	3	2	1	6	5

Table 2 Comparison of semiconductor technologies.

At the present time, NMOS seems to have the most desirable combination of characteristics. It is relatively cheap, very dense, consumes little power, can be made compatible with standard TTL circuitry, and has a family of large compatible memories. NMOS can be used to make single-chip microprocessors which run at reasonable speeds. Such commonly used microprocessors as the Intel 8080, Motorola 6800, MOS Technology 6502, and Fairchild F-8 are made from the NMOS process.

Furthermore, new developments in the NMOS technology should lead to considerable improvements. NMOS memories (like the Intel 2115) are now available that are as fast as memories made from Schottky TTL. The maximum size of the chips that can be produced from NMOS has also been increased. New NMOS processes have been introduced that can be easily interfaced with standard TTL circuitry and can use standard TTL power supplies. Significantly increased performance can be expected in the next few years from NMOS microprocessors.

As for the other technologies, the ones that will probably be the most interesting to hobbyists are CMOS and I^2L. Only a few processors (most notably the RCA COSMAC and Intersil 6100) are presently available in these technologies, but none has been widely used in hobby computers. However, single-chip microprocessors would appear to be possible in both technologies at relatively low prices. Such processors would not only be faster than NMOS processors, but would also use substantially less power and would be much more rugged. Microprocessors and large memories in these technologies may become available to hobbyists in the next few years. ■

References

Bylinsky, G., "Here Comes the Second Computer Revolution," *Fortune*, November 1974, p. 134.

"Computer Store: 'Frantic and Fun,'" *Datamation*, November 1975, pp. 143-145.

Gilder, J. H., "All About Microcomputers," *Computer Decisions*, December 1975, pp. 44-49.

Heiser, R., "Hobbyists off on a Weekend," *Datamation*, May 1976, pp. 201-203.

Himmelfarb, M., "The Makings of a Mini," *Digital Design*, August 1975, p. 80.

McWhorter, E. W., "The Small Electronic Calculator," *Scientific American*, March 1976, pp. 88-98.

Vacroux, A. G., "Microcomputers," *Scientific American*, May 1975, pp. 32-40.

Weisbecker, J., "A Practical Low-Cost, Home/School Microprocessor System," *Computer*, August 1974, pp. 88-98.

BE MY GUEST

visiting views from around the globe

from page 9

Wednesday and said he was told at the hospital that it did not have the proper equipment to treat Carden.

By that time, Smith and other hams had managed to get Carden's bail reduced from $9,000 to $2,700. But after appeals on the air only $1,700 had been pledged.

When Johnston learned that the courts in Mexicali were to close yesterday for a 30-day recess, he decided to go there and plead with Judge Rafael Moreno Henriquez, chief justice of the Superior Tribunal.

"Why should this boy lie there and pay with his life for a minor crime?" Johnston said he asked the judge.

Reduce the bail to an amount the hams could pay, Johnston pleaded. The judge agreed to do so. "He was a fine gentleman," Johnston said. He added that all government officials in Mexicali cooperated to the fullest to free Carden.

Johnston, who is coordinating the fund-raising effort, said that he had only $22 in hand from pledges made to him over the radio.

The 17 $100 bills used to free Carden yesterday were supplied by one ham who asked to remain anonymous. He is confident that the pledges will be made good.

Another ham told Hower he would make good any shortfall between the pledges and the bail.

Hower said the hams are not judging whether Carden is guilty. "If you find a man bleeding in the middle of the road, you help him," he said.

As word of the mission of mercy spread, Johnston got a call from a man in Oregon yesterday.

"He asked me if the company that rescued Robert could also save a man in Acapulco," Johnston said. "I told him that we are not a company, but a fraternal order just trying to be of service."

The hospital was to check today to see if Carden is a former serviceman entitled to VA treatment.

If he is, about the only reason he could be turned out of the hospital and refused treatment would be if he had been dishonorably discharged, a hospital spokesman said.

Martin Gerchen

Reprinted from the Evening Tribune *(San Diego), July 16, 1976.*

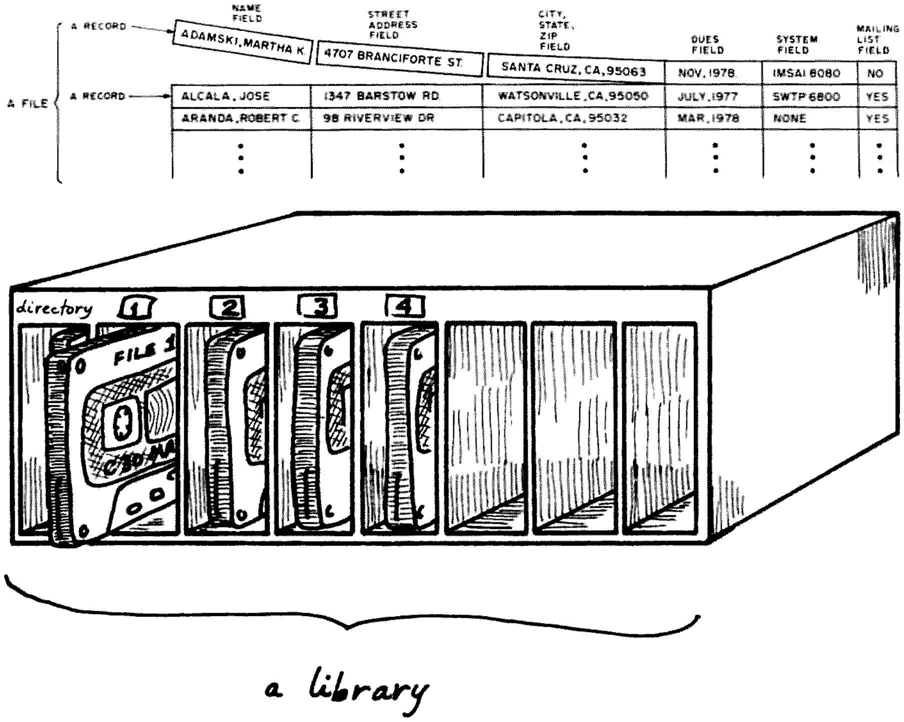

Fig. 1. Organization of the "data bank." Each file is stored on an individual cassette.

Rich Didday
1218 Broadway
Santa Cruz CA 95062

The Soft Art of Programming

-- part III

(Here's the final installment of Rich Didday's series on BASIC programming. The article is written around a record-keeping program for computer club members . . . but the concepts presented will be applicable in many other areas as well. For the beginner, a lot can be learned from reading and analyzing the program — which holds true for experienced programmers, too. I'd like to invite you readers who sit down and develop the machine language routines for cassette read and write to submit them for publication. OK? — Ed.)

What we've been doing: In Part I we went over ways of learning the individual elements of the programming language BASIC, emphasizing that good programming involves planning things out long before you ever write any statements in BASIC (programming is a lot more than just coding). We played around. We had fun.

In Part II we began to put together sequences of computer instructions (BASIC statements) in order to carry out a substantial, useful task — namely, the record-keeping requirements of our computer club. We saw ways of using arrays, ways of estimating how much memory our program would need for data storage, ways of cutting down on memory usage. We got frustrated.

In this, the concluding part, we'll finish the record-keeping program by pulling together the ideas we laid out last time, with some major improvements. We'll emphasize the notion of

developing our program part by part, keeping the user's convenience and our overall objectives clearly in mind. We'll be satisfied, ready to go onward and upward.

At last! We're finally ready to finish our record-keeping program. Before plunging into the details of the finished program, let's be sure we have the big picture firmly in mind.

Fig. 1 shows the organization of our "data bank." There is a *record* for each member. Each record consists of six *fields* which store specific information about that member. A *file* consists of some number of records, the only restriction being that the number of records on a given file can be no more than will fit in memory at once. We'll store each file on a separate cassette tape, so we'll use the terms *file, tape,* and *tape file* pretty much interchangeably. In addition to the tapes storing membership records, there is one more which stores a *directory* which we'll use to enable our program to decide which tape file it needs to find a specific member's record. The directory tape together with the membership record tape files make up the *library.*

Our program must initialize and maintain the library, calling for and rewriting tape files as the need arises (based on the commands the user gives at the terminal). The four commands ADD, DELETE, LIST, and END seem sufficient for our needs. Fig. 2 describes each command and shows the basic structure of the program.

So far, the only difference from last month's plan is the inclusion of a directory. It is a big difference, though, because the directory, coupled with a more reasonable way of organizing the records (namely, keeping them in alphabetical order instead of in no order like last time), will make the system much more convenient to use. For now, let's follow through in a "top-down" way and code the main structure of the program, the part shown in the flow chart in Fig. 2. We'll leave the details for subroutines which we'll work out one by one. This general strategy is sometimes called "top-down programming" and sometimes "modular programming." The idea is that by breaking the problem down into manageable chunks, you're less likely to get confused, and more likely to keep all your objectives in mind as you go.

The Main Program

The main program begins by declaring the arrays to store membership records (exactly the same as last time) and the arrays which hold information about each file (i.e., the directory information). The next step is to initialize a number of the variables which we'll use to minimize the number of tape operations required. Also, there is a variable which you'll have to tailor to your own system: RI, which tells how many records can fit in memory at once.

The next thing the program does is determine how to initialize the directory information. If this is the first use of the system ever, there is no directory tape yet, so the program fills zeros into the appropriate parts of the directory, and gets ready to start creating the first file (which will eventually be stored on cassette tape number 1). If, on the other hand, the system *has* been used before, there will be a tape with the directory information on it, and the program requests the user to mount it and read it in.

Next, the program offers to print a summary of the available commands (that's handled by the subroutine which starts at statement 3000, which we'll get to soon).

Finally, the program enters the main loop (starting at statement 2000) which asks for a COMMAND, interprets it, and carries it out. The program segment for the END command begins at statement 2040, the code for the LIST command begins at 2200, the ADD at 2450, and the DELETE at 2570. If the user types in an invalid command, control passes to state-

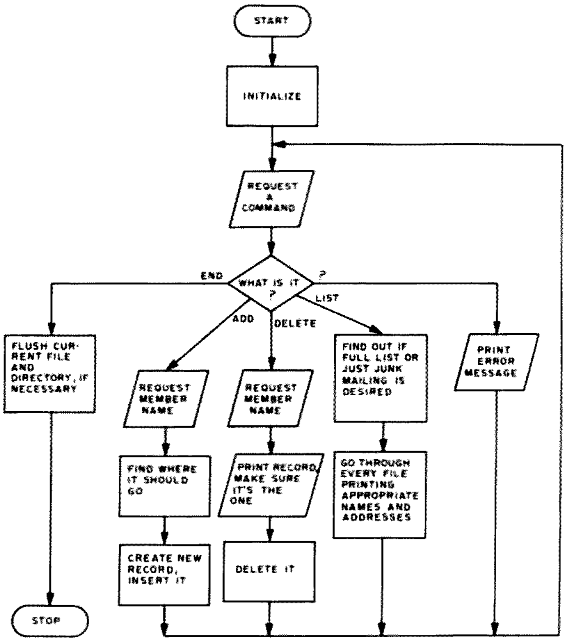

Command	Action Taken
END	End of run. If the file currently in memory has been altered in any way, write it out to its cassette tape. If the directory has been altered, write it out also.
ADD	Insert a new record. Ask for the new member's name, figure out what file it goes on. If that file isn't in memory, get it. Get the rest of the member information and insert the new record in alphabetical order.
DELETE	Remove a record from the library. For safety's sake, print the whole record and ask again before deleting it.
LIST	Generate a mailing list. Go through the entire library, starting with tape file 1, printing names and addresses of appropriate members.

Fig. 2. Basic structure of the record-keeping program with each command described.

ment 2750.

The statements which handle the commands make frequent use of subroutines to carry out the details. As you go over the statements, keep referring to the flow chart in Fig. 2 to see how things fit into the overall scheme. Incidentally, even if you have no plans whatsoever to implement this program on your own machine, you'll learn a lot by making sure you see how the program works, and by trying to redo parts of it in different ways, seeing if you can make it cleaner and more useful. (I'm happy with it the way it is, but everyone's taste and specific needs differ.)

```
1000 REM  FILE MANIPULATION PROGRAM
1010 REM  THIS PROGRAM MAINTAINS A "DATA BANK"
1020 REM  OF CLUB MEMBERSHIP RECORDS ON A LIBRARY
1030 REM  OF CASSETTE TAPE FILES
1040 REM  EACH FILE CONSISTS OF UP TO "R1" RECORDS
1050 REM  AND IS MAINTAINED IN ALPHABETICAL ORDER
1060 REM  EACH RECORD HAS 6 FIELDS
1070 REM      N$( )  IS THE MEMBER NAME FIELD
1080 REM      A$( )  IS THE STREET ADDRESS FIELD
1090 REM      B$( )  IS THE CITY, STATE, ZIP FIELD
1100 REM      D$( )  IS THE DUES EXPIRATION DATE
1110 REM      S$( )  IS THE SYSTEM DESCRIPTION FIELD
1120 REM      L$( )  IS THE MAILING LIST PREFERENCE
1130 DIM N$(75),A$(75),B$(75),D$(75),S$(75),L$(75)
1140 REM  THE DIRECTORY CONSISTS OF
1150 REM      R0 - THE TOTAL # OF RECORDS
1160 REM      T0 - THE TOTAL # OF FILES
1170 REM      F$( ) - THE NAME FIELD OF
1180 REM             THE FIRST RECORD ON EACH FILE
1190 REM      G( ) - THE # OF RECORDS ON EACH FILE
1200 DIM F$(25),G(25)
1205 REM  "T" IS THE TAPE FILE CURRENTLY IN MEMORY
1210 REM  T1=1 IF THE FILE IN MEMORY HAS BEEN ALTERED
1220 LET T1=0
1230 REM  R1 IS THE MAX # OF RECORDS PER FILE
1240 LET R1=75
1250 REM  IF FIRST USE EVER, INITIALIZE DIRECTORY, ETC
1260 PRINT "IS THIS THE FIRST USE OF THIS SYSTEM"
1270 INPUT Z$
1280 IF Z$ <> "YES" THEN 1390
1290 REM  FIRST USE NO RECORDS YET, DIRECTORY ALTERED
1300 LET R0=0
1310 LET D1=1
1320 REM  GET READY FOR FIRST FILE
```

```
1330 LET T0=1
1340 PRINT "PLEASE MOUNT A NEW TAPE, BUT DON'T RUN IT"
1350 PRINT "IT'S TAPE FILE NUMBER 1"
1360 LET T=1
1370 LET G(T)=0
1380 GO TO 1550
1390 REM  NOT FIRST USE, GET DIRECTORY
1400 PRINT "PLEASE MOUNT AND RUN THE DIRECTORY TAPE"
1410 REM  CALL MACHINE LANGUAGE ROUTINE TO SET
1420 REM  UP TAPE READ OPERATION
1430             (call goes here)
1440 INPUT R0, T0
1450 FOR F3=1 TO T0
1460    INPUT F$(F3),G(F3)
1470    NEXT F3
1480 REM  CALL MACHINE LANGUAGE ROUTINE TO
1490 REM  TURN OFF TAPE READ OPERATION
1500             (call goes here)
1510 REM  NO FILE IN MEMORY, DIRECTORY UNALTERED
1520 LET T=0
1530 LET D1=0
1540 PRINT "THANKS, YOU CAN REMOVE DIRECTORY TAPE"
1550 REM  OFFER COMMAND SUMMARY
1560 GOSUB 3000
2000 REM  MAIN LOOP - GET COMMAND AND DO IT.
2010 PRINT "COMMAND"
2020 INPUT C$
2030 IF C$ <> "END" THEN 2190
2040    REM  "END" DUMP ALL NECESSARY STUFF
2050    GOSUB 7000
2060    IF D1 <> 1 THEN 2150
2070    PRINT "PLEASE MOUNT DIRECTORY TAPE."
2080    REM CALL MACHINE LANGUAGE ROUTINE
2090    REM TO SET UP TAPE OUTPUT.
2100             (call goes here)
2110    PRINT R0, T0
2120    FOR F3=1 TO T0
2130       PRINT F$(F3),G(F3)
2140       NEXT F3
2145    REM CALL MACHINE LANGUAGE ROUTINE
2146    REM TO STOP TAPE OUTPUT OPERATION
2147             (call goes here)
2150    PRINT "THERE ARE "T0" FILES IN THE LIBRARY,"
2160    PRINT "CONTAINING "R0" RECORDS."
2170    PRINT "SEE YOU AGAIN."
2190 IF C$ <> "LIST" THEN 2440
2200    REM  MAILING LIST COMMAND
2210    REM  SERIOUS OR JUNK MAILING?
2220    PRINT "ALL MEMBERS (YES) OR"
2230    PRINT "JUST MAILING LIST (NO)"
2240    INPUT Z$
2250    REM  ALREADY HAVE TAPE 1?
2260    IF T=1 THEN 2310
2270    REM  NO, DUMP CURRENT FILE, GET TAPE 1.
2280    GOSUB 7000
2290    LET T=1
2300    GOSUB 8000
2310    REM  PRINT THIS FILE
2320    FOR I=0 TO G(T)-1
2330       IF Z$="NO" AND L$(I)="NO" THEN 2380
2340       PRINT
2350       PRINT N$(I)
2360       PRINT A$(I)
2370       PRINT B$(I)
2380       NEXT I
2390    IF T > T0-1 THEN 2000
2400    GOSUB 7000
2410    LET T=T+1
2420    GOSUB 8000
2430    GO TO 2310
2440 IF C$ <> "ADD" THEN 2560
2450    REM  "ADD" COMMAND
2460    REM  GET NAME, TAPE, LOCATION
2470    GOSUB 4000
2480    IF F <> 1 THEN 2510
2490       PRINT "BUT "P$" IS ALREADY HERE!"
2500       GO TO 2000
2510    REM  ADD NEW MEMBER
2520    PRINT
2530    PRINT "ADDING A NEW RECORD FOR "P$
2540    GOSUB 9000
2550    GO TO 2000
2560 IF C$ <> "DELETE" THEN 2750
2570    REM  "DELETE" COMMAND
2580    REM  GET NAME, TAPE, LOCATION
2590    GOSUB 4000
2600    IF F=1 THEN 2630
2610       PRINT "UH "P$" ISN'T HERE ANYWAY"
2620       GO TO 2000
2630    REM  PRINT RECORD TO BE SURE IT'S THE ONE
2640    PRINT N$(I)
2650    PRINT A$(I)
2660    PRINT B$(I)
2670    PRINT D$(I)
2680    PRINT S$(I)
2690    PRINT L$(I)
2700    PRINT "STILL WANT TO DELETE IT"
2710    INPUT Z$
2720    IF Z$ <> "YES" THEN 2000
2730    GOSUB 10000
2740    GO TO 2000
2750 PRINT "SORRY, BUT "C$" ISN'T A COMMAND."
2760    GOSUB 3000
2770    GO TO 2000
```

The Command Summary Subroutine

The subroutine which begins at statement 3000 simply prints a summary of the available commands. Depending on your taste, it could be made more extensive, and include such details as how to load and start your cassette tape equipment, how to store the tape files, and so on. On the other hand, if your system will be used only by people who are very familiar with it, the subroutine could be shortened.

```
3000 REM  COMMAND SUMMARY SUBROUTINE
3010 PRINT "WANT A SUMMARY OF COMMANDS";
3020 INPUT Z$
3030 IF Z$ = "NO" THEN 3140
3040 PRINT
3050 PRINT "***** COMMANDS *****"
3060 PRINT "END     BE SURE TO GIVE THIS AS"
3070 PRINT "        YOUR LAST COMMAND"
3080 PRINT "ADD     ADD A NEW MEMBER"
3090 PRINT "DELETE  DELETE A RECORD"
3100 PRINT "LIST    GENERATE A MAILING LIST"
3110 PRINT
3120 PRINT "NOTE: TO CORRECT OR UPDATE A"
3130 PRINT "MEMBER'S RECORD, 'DELETE' AND THEN 'ADD'"
3140 RETURN
```

One difference from last month's scheme is that there's no longer an UPDATE command for altering a member's record. Since we're now keeping the records in alphabetical order, the UPDATE command isn't as simple as before – if the spelling of the member name changes, the program would have to remove the old record and insert the changed version of it in the proper place. It seemed simpler to me to just provide a DELETE command and let the user do updates with it. Again, it's a matter of taste. If you feel that you'd rather have an UPDATE command, or you'd like to add some other command, the way the main program is organized makes it easy to do so. For example, suppose you want to add a command called PRINT which asks for a member's name and then prints the corresponding record. All you'd have to do is insert an appropriate test at statement 2750, insert the appropriate statements at that point, and shift the statements which handle illegal commands down to the end, like this:

```
2750 IF C$ <> "PRINT" THEN 2860
2760    REM  "PRINT" COMMAND: GET MEMBER NAME, LOCATION
2770    GOSUB 4000
2780    PRINT N$(I)
2790    PRINT A$(I)
2800    PRINT B$(I)
2810    PRINT D$(I)
2820    PRINT S$(I)
2830    PRINT L$(I)
2840    PRINT
2850    GO TO 2000
2860 PRINT "SORRY, BUT "C$" ISN'T A COMMAND."
2870    GOSUB 3000
2880    GO TO 2000
```

The Get Name, File, and Location Subroutine

This subroutine performs a fairly simple task conceptually – namely, getting a member's name from the user and then finding where it goes. However, since the right file may not be in memory, it can take a fair amount of thrashing around to accomplish this task.

Getting the member's name is easy, but how do we use the directory to discover which file that member's record should be on? The F$( ) part of the directory gives the first member on each file. We begin by considering file number 1 (the variable T2 stores the number of the tape file we're considering). If there is only one tape file, then we're done – the member must go on file 1. If there are more, we get to line 4080. If the name we seek comes before the first name on file 2, we're done – again, the member must go on file 1. If on the other hand, the name we seek

---

There are two assumptions that heavily influence the design of the record-keeping program. First, I've assumed that (eventually) there will be many more records than will fit in memory at once. If in your particular application that's not true, you can simplify the program substantially (you no longer need the directory, the update procedure, nor any of the elaborate tape requesting and dumping machinations).

The second assumption is that we have only one simple, slow cassette recorder to work with. That means that any extra work the program can do to avoid reading or writing tapes will be well worth the effort. By keeping the records in alphabetical order and by keeping a directory showing where each tape file starts, we can figure out what tape file a particular name goes on immediately, with no extra tape reads. By keeping track of whether or not a file in memory has been altered, we can avoid any unnecessary tape write operations.

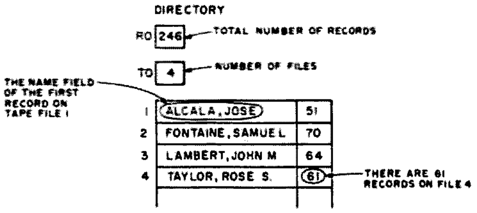

The directory at a particular point in time.

Other Key Variables:

D1	= 1 if directory has been altered at any time during the current run.
T1	= 1 if the tape file in memory has been altered in any way.
R1	= the maximum number of records per file.

Dec 1976

comes *after* the first name on file 2, the test in line 4080 fails, and we add one to T2 and go through the process again. Eventually, either we come to the last tape file (and the test in line 4070 succeeds), or else we find that the name goes before the first name on file T2+1 (and the test in line 4080 succeeds). In either case, when we exit to line 4110, we know that the member belongs on file T2.

Next, the routine checks to see if the right file is already in memory (line 4120), and if not, we flush out whatever file *is* in memory (using the flush subroutine which begins at statement 7000) and request the proper file (using the tape read subroutine – line 6000). At last we have the right file in memory and we can call the search subroutine (line 5000) to determine where the record goes in the file.

```
4000 REM GET NAME, FIND PROPER FILE AND LOCATION
4010 REM  USED FOR "ADD" AND "DELETE" COMMANDS
4020 PRINT "MEMBER (LAST NAME, FIRST & MIDDLE INITIAL)"
4030 INPUT X$,Y$
4040 LET P$=X$+","+Y$
4050 REM  WHAT FILE DOES "P$" FIT IN?
4060 LET T2=1
4070 IF T2 >= T0 THEN 4110
4080   IF P$ < F$(T2+1) THEN 4110
4090   LET T2=T2+1
4100   GO TO 4070
4110 REM  "P$" GOES ON FILE "T2"  HAVE IT ALREADY?
4120 IF T2=T THEN 4180
4130 REM  DON'T HAVE IT. FLUSH CURRENT TAPE,
4140 REM                REQUEST TAPE "T2"
4150 GOSUB 7000
4160 LET T=T2
4170 GOSUB 6000
4180 REM  WHEW! AT LAST WE CAN SEARCH FOR "P$"
4190 GOSUB 5000
4200 RETURN
```

Binary Search Subroutine

The next subroutine is a key one. It's the subroutine that searches the records in memory for a particular member's name (stored in P$). It's different from last time because now we're storing the records in alphabetical order of the members' names. The main reason we're doing that is to minimize the number of tape operations the user has to do. However, there's an added benefit. Our program will be able to look up records much faster than before. Why's that?

Imagine how horrible it would be if the phone company listed people in their phone directory in the order in which they signed up for phones! My phone book has about 72,000 listings in the white pages. Even if I could look at 5 entries per second, it would take *two hours* to find a number, on the average. (That's assuming I didn't go bananas first.) Of course, the phone company has had the good sense to put the listings in alphabetical order, and we all know how to use that fact to enable us to find a number in a few seconds. Quite a difference.

It's easy to see why having the entries in alphabetical order is such a big deal. If they're not, when I look at an entry and it turns out not to be the right one, I've eliminated just that one possibility. On the other hand, if they *are* in order, and I look at an entry near the middle of the phone book, if it's not the right one, I can eliminate 36,000 entries from further consideration by checking whether the name I want comes before or after the one I just looked at.

It's all very well to imagine looking up numbers in the phone book – now we have to devise a computer program that mimics what we do. The key idea seems to be that as we go along, we keep narrowing down the region of the phone book in which the entry must lie. Let's use two variables, one called L (for Low) which stores an array subscript value which we know to be lower than the position of the name we seek, and one called H (for High) that stores a value which is higher than the subscript of the desired element. Then, each time through the loop, we'll look at the array position midway between L and H. If it's the name we're looking for, we're done. If the name comes earlier than the one we just looked at, we'll adjust H. If it comes later, we adjust L. If L and H squeeze together before we've found the name we want, that means that the name wasn't in the array at all, but that it should be at location H. Since each step of this procedure can eliminate half of the remaining possibilities, it's called a *binary search procedure.* Follow through the flow chart in Fig. 3 with a few examples to get a feeling for how it works.

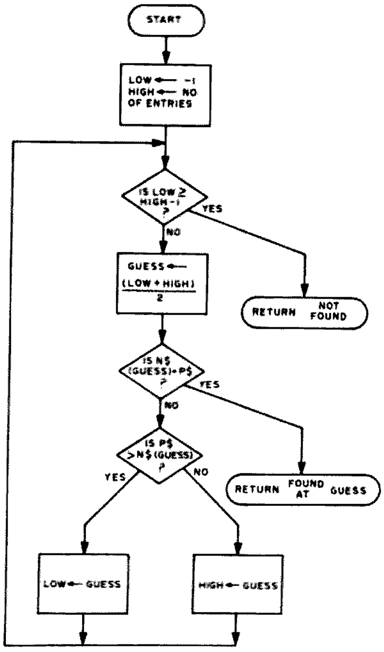

Fig. 3. The binary search procedure.

```
5000 REM  BINARY SEARCH ROUTINE
5010 REM  LOOK FOR MEMBER NAME "P$"
5020 REM  "G(T)" GIVES THE NUMBER OF RECORDS
5030 REM  IN MEMORY (ON FILE "T")
5040 REM        "L" IS AN ARRAY SUBSCRIPT LOWER
5050 REM              THAN "P$"'S POSITION
5060 REM        "H" IS HIGHER THAN "P$"
5070 REM  RETURNS  F=0  NOT FOUND, BELONGS AT "I"
5080 REM                F=1  FOUND AT POSITION "I"
5090 LET L=-1
5100 LET H=G(T)
5110 IF L >= H-1 THEN 5240
5120   LET I=INT((L+H)/2)
5130   IF P$=N$(I) THEN 5210
5140   IF P$ > N$(I) THEN 5180
5150     REM  "P$" IS BEFORE "I"
5160     LET H=I
5170     GO TO 5110
5180     REM  "P$" IS AFTER "I"
5190     LET L=I
5200     GO TO 5110
5210 REM  FOUND IT AT "I"
5220 LET F=1
5230 RETURN
5240 REM  IT'S NOT HERE, BUT IT SHOULD BE AT "H"
5250 LET I=H
5260 LET F=0
5270 RETURN
```

Read Tape Subroutine

This subroutine is fairly simple, but parts of it depend on the details of your cassette tape interface. I've assumed that on your system, you can "fool" the BASIC interpreter into accepting input values from tape through INPUT statements. On our system, we dig into the interpreter code and change the I/O port specification used by the routine that handles terminal I/O. After the desired values have been read in from the tape, we switch it back so that further INPUTs come from the terminal.

The sequence of statements from 6080 to 6140 may look a little weird unless you recall that every time BASIC comes to a comma in the input, it assumes that's the end of the value, so that, for example, the comma after the member's last name divides the entire member's name into two separate strings.

```
6000 REM  REQUEST AND READ TAPE "T"
6010 REM  DETAILS OF TAPE READ DEPEND ON
6020 REM  SPECIFIC IMPLEMENTATION
6030 PRINT "PLEASE MOUNT TAPE FILE #";T
6040 REM  CALL MACHINE LANGUAGE SUBROUTINE TO
6050 REM  SET UP TAPE READ OPERATION
6060            (call goes here)
6070 FOR I=0 TO G(T)-1
6080   INPUT X$,Y$
6090   LET N$(I)=X$+","+Y$
6100   INPUT A$(I),X$,Y$,Z$
6110   LET B$(I)=X$+","+Y$+","+Z$
6120   INPUT X$,Y$
6130   LET U$(I)=X$+","+Y$
6140   INPUT S$(I),L$(I)
6150   NEXT I
6160 REM  CALL MACHINE LANGUAGE SUBROUTINE TO
6170 REM  STOP TAPE READ OPERATION
6180            (call goes here)
6190 REM  CHECK TO SEE IF THIS REALLY IS TAPE T
6200 IF N$(0)>=F$(T) THEN 6230
6210 PRINT "THIS ISN'T TAPE ";T;" PLEASE CHECK."
6220 GO TO 6030
6230 REM  RESET "TAPE CHANGED" FLAG
6240 LET T1=0
6250 RETURN
```

Flush Current File Subroutine

If the file that's currently in memory hasn't been changed in any way, T1 will equal 0, and we get away with doing nothing (and the user can just rewind the tape and put it away without waiting for the file to be rewritten). If it has been altered, we copy the new version back to cassette tape for storage using the tape write subroutine. "S2" is a parameter which tells the tape write subroutine where to start from in memory. In the "flush" operation, we want to write the entire file, so we set S2=0.

```
7000 REM FLUSH CURRENT TAPE SUBROUTINE
7010 REM IF TAPE "T" HAS BEEN ALTERED
7020 REM THEN REWRITE IT ELSE DONE
7030 IF T1=1 THEN 7050
7040 RETURN
7050 PRINT "PLEASE REWIND AND RESTART
7060 PRINT "THE TAPE (IF T)"
7070 LET T1=0
7080 GOSUB 8000
7090 RETURN
```

Tape Write Subroutine

Like the tape read subroutine, this one is simple conceptually, but depends on your ability to write a machine language program to "fool" the BASIC interpreter. In this case, we want to make the output from a PRINT statement go to the tape machine instead of the terminal. If that's hopelessly messy on your system, you may wind up having to write a machine language routine to handle all the details of memory-to-tape operations. Maybe someday there'll be standards adopted and accepted so we don't have to keep "reinventing the wheel" everytime we want to do I/O!

```
8000 REM TAPE WRITE SUBROUTINE
8010 REM WRITE ALL RECORDS FROM "S2" TO END
8020 REM CALL MACHINE LANGUAGE SUBROUTINE
8030 REM TO SET UP TAPE OUTPUT OPERATION
8040            (call goes here)
8050 FOR I=S2 TO G(T)-1
8060    PRINT N$(I)
8070    PRINT A$(I)
8080    PRINT E$(I)
8090    PRINT D$(I)
8100    PRINT S$(I)
8110    PRINT L$(I)
8120    NEXT I
8130 REM CALL MACHINE LANGUAGE SUBROUTINE
8140 REM TO STOP TAPE OUTPUT OPERATION
8150            (call goes here)
8160 RETURN
```

Insert New Record Subroutine

This subroutine is used to carry out the ADD command. It, like the search routine, is more complex than last time because we now want the records to be in alphabetical order. If you look back at the main program, you'll see that this subroutine is called after we're sure the right tape file is in memory, and after we've determined where the new record should go in that file (the binary search routine returns the location in memory cell "I"). In order to keep the records in order, we have to shift some of the records already in the file to make room for the new entry.

The old adage "you don't get something for nothing" applies here. Although keeping the records in order lets us look things up faster, it makes inserting a new record slower. With last month's scheme, we just stuck the new records in the next unused location in the arrays. Now we have to move records (half of them on the average) to make room for the new record. The time difference will be barely noticeable compared to the tremendous savings we make by eliminating tape read operations, so we're still miles ahead with our new scheme.

After adding a new record, we need to change the directory and, since we've just altered the file, we have to make sure that T1 is 1 to reflect that fact (see lines 9200 through 9230).

Before we RETURN, there's one more thing we have to check. What if adding this record has completely filled memory? If so, the next ADD command would cause the file to overflow. Since R1 tells how many records are allowed on a file, we see if we've hit the limit in line 9260. Remember that G(T) tells how many records are on file T. If we have, we initiate an update operation by calling the update subroutine.

```
9000 REM INSERT NEW RECORD AT LOCATION "I"
9010 REM CALL SHIFT SUBROUTINE (D=1 MEANS
9020 REM           SHIFT FROM "I" UPWARDS
9030 LET D=1
9040 GOSUB 11000
9050 REM GET REST OF MEMBER INFO
9060 LET N$(I)=P$
9070 PRINT "STREET ADDRESS"
9080 INPUT A$(I)
9090 PRINT "CITY, STATE ZIP"
9100 INPUT W1$,Y2$,Z$
9110 LET E$(I)=W1$+", "+Y2$+" "+Z$
9120 PRINT "DUES EXPIRATION DATE MONTH YEAR"
9130 INPUT M$,Y$
9140 LET D$(I)=M$+" "+Y$
9150 PRINT "SYSTEM DESCRIPTION"
9160 INPUT S$(I)
9170 PRINT "MAILING LIST (YES OR NO)"
9180 INPUT L$(I)
9190 REM NOW THERE'S ONE MORE RECORD ON THIS FILE
9200 LET G(T)=G(T)+1
9210 LET R0=R0+1
9220 LET F$(T)=N$(0)
9230 LET T1=1
9240 REM IF THIS FILE IS FULL INITIATE
9250 REM AN UPDATE OPERATION
9260 IF G(T)<R1 THEN 9280
9270 GOSUB 12000
9280 RETURN
```

Delete A Record Subroutine

This subroutine carries out the details of the DELETE command. It uses the shift subroutine to shift all records after the one to be deleted, updates the directory, and notes (by making sure that T1 is 1) that the file has been altered.

```
10000 REM DELETE RECORD "I" SUBROUTINE
10010 REM USE SHIFT SUBROUTINE
10020 LET D=-1
10030 GOSUB 11000
10040 LET G(T)=G(T)-1
10050 LET F$(T)=N$(0)
10060 LET T1=1
10070 LET R0=R0-1
10080 RETURN
```

Shift Subroutine

This routine does the shifting required by the insert and delete subroutines. For some reason, it was a real pain in the neck to write. It seems like such a simple thing to do, and now that I've got it working, it looks so reasonable, but ... I wrote it slightly differently at first, only to find that it blew up the first time I did an ADD. The problem was that G(T) is 0 before file T has any records on it, and the way I had written the stupid thing, it tried to access array location -1. I'm sure it demonstrates some Grand Principle about programming, but which one I don't know. Probably some variant of Murphy's Law.

```
11000 REM SHIFT SUBROUTINE
11010 REM SHIFT ALL RECORDS BETWEEN "I"
11020 REM AND END. DIRECTION DEPENDS ON "D"
11030 IF D<0 THEN 11080
11040 REM INSERTING GO FROM END DOWN TO "I"
11050    LET S0=G(T)
11060    LET F0=I
11070    GO TO 11110
11080 REM DELETING GO FROM "I" UP TO END
11090    LET S0=I
11100    LET F0=G(T)-1
11110 REM DO IT
11120 IF S0=F0 THEN 11210
11130    LET N$(S0)=N$(S0-D)
11140    LET A$(S0)=A$(S0-D)
11150    LET E$(S0)=E$(S0-D)
11160    LET D$(S0)=D$(S0-D)
11170    LET S$(S0)=S$(S0-D)
11180    LET L$(S0)=L$(S0-D)
11190    LET S0=S0-D
11200    GO TO 11120
11210 RETURN
```

Update Subroutine

When repeated ADDs have filled up a file, we have to do something about it. The most reasonable thing to do seems to split that file in half and make two tape files out of it. Why does that seem reasonable? Another option would be to add a new tape file at the end of the library, and then spread the records from all the files out evenly. Since that would mean a tremendous number of tape reads and writes if the library was big, I ruled it out (we don't want people sitting around muttering subversive things like "Why don't we up the club dues and get a disk?"). After I had ruled out the second option, I came up with another reason for ruling it out: If a particular file has overflowed, it might be because a lot of club members have names in the same part of the alphabet, so it makes more sense to make more room right around that file than to make a little more room throughout the alphabet.

Since the update yields two tape files where there was one before, and since the tape files themselves have to be kept in alphabetical order for the directory scheme to work right, the user has to

Debugging: Some Tips

The first principle of debugging may seem obvious, but for some reason it gets violated all the time. *You have to know what's supposed to be going on before you can tell what's wrong.* In practical terms, that means that you should have your flow charts, plans, and notes by your side (and you should *use* them) as you try to figure out why the program's responses are wacky, why you're getting that error message, why you feel nervous.

BASIC provides some nice features that aid debugging. It's easy to toss STOP statements at suspect places, and when the program stops there, to use the system in the "console mode" to investigate what's happening.

For example, when I ran into trouble with the shift routine, I typed

```
11125 STOP
```

and ran the program again. When it stopped at 11125, I typed

```
PRINT S0, F0
```

and the system responded

```
-1        0
```

That told me why I was getting the "subscript out of range" error message, but why was S0 starting off at -1?

The important thing at this point, and the thing that takes some discipline, is to resist the temptation to slap in the first fix you can think of that will cure the immediate symptom. You'll be much better off if you take your time, prowl around checking values, figuring out what the real problem is. In this case, it turned out that my whole strategy for shifting was wrong. If I had just changed the statement that set S0 to its initial value, the program would have failed in other situations.

Some Possible Improvements

One added feature that would be worthwhile would be for the LIST command to convert the member names to the "first middle last" form before printing out the mailing labels. Most people would probably rather have their mail addressed to them that way. Your version of BASIC should have built-in string manipulation functions which will make it easy to code this flow chart:

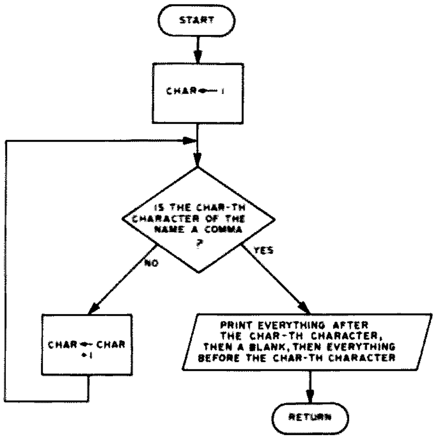

Another problem that could use some work is that the program is totally unforgiving about misspellings. You might find it nicer to have the program check just the first letter of the commands, so that misspellings like the one in the sample run (DELTE for DELETE) wouldn't make any difference. A similar but bigger problem is that if you don't abbreviate a member's name the same way on different occasions, the program will treat each different spelling as a different member. One solution would be to write a subroutine which can tell if two names are "close." It could decide that two names were "close" if the last names were the same and the first names have a lot of letters in common. Then if the user types a name that the program can't find, the program can look for names that are "close" to the one the user wants. If the program manages to find such a name, it should then ask the user if the two names actually refer to the same person.

One last thing: If you're tight on memory, you'll probably benefit by redoing the part of the program that decides when to do an update. If you have the program count the number of *characters* on each file instead of just the number of records, you'll be able to squeeze every last byte out of your memory. Hopefully your version of BASIC has a built-in function that computes the length of a string (it's called LEN in Altair BASIC), which will help greatly.

renumber all the tapes after the one being updated. That's a possible source of error, so anyone who is going to have access to the system should be warned about it. If the tape files *do* happen to get out of order, the tape read subroutine will catch the error (see lines 6190 through 6220), but it might take a number of laborious tape reads to get things working again.

The subroutine should be pretty easy to follow. It copies the second half of the file in memory to the new tape and then updates the directory appropriately. It leaves the rest of the old file in memory, and since it's still file number T, nothing has to be done except to record its new (shorter) length in the directory (line 12240).

```
12000 REM  UPDATE SUBROUTINE
12010 REM  MOVE SECOND HALF OF CURRENT FILE
12020 REM  TO A NEW TAPE, PATCH UP DIRECTORY
12030 PRINT "THIS FILE IS ABOUT TO OVERFLOW
12040 PRINT "GOING TO BE A BIT OF WORK HERE
```

```
12050 PRINT "FIRST REWIND CURRENT TAPE. IT WILL
12060 PRINT "STILL BE CALLED TAPE FILE  ";T
12070 LET T0=T0+1
12080 IF T+1>T0 THEN 12120
12090 PRINT "UNFORTUNATELY, YOU MUST RENUMBER
12100 PRINT "OLD FILES WITH NUMBERS ABOVE ";T
12110 PRINT "TO MAKE ROOM FOR A NEW FILE."
12120 PRINT "NOW LOAD A FRESH TAPE, CALL IT #";T+1
12130 LET [illegible]
12140 GOSUB [illegible]
12150 PRINT "NOW PLEASE TOSS TAPE ";T;" BACK"
12160 PRINT "ON THE MACHINE, BUT DON'T RUN IT
12170 REM  SHIFT ENTRIES IN DIRECTORY TO MAKE ROOM
12180 FOR J=T0-1 TO T+1 STEP -1
12190    LET [illegible]
12200    LET [illegible]
12210    NEXT J
12220 LET [illegible]
12230 LET [illegible]
12240 LET [illegible]
12250 PRINT [illegible]
12260 RETURN
12270 END
```

Using The System

To use the record-keeping program on your system, you need to copy the statements in the program, fill in the calls to machine language subroutines to do the cassette tape operations, find a good, safe place to store the cassette tapes which hold the directory and files, and let 'er rip! Here's a sample run showing some of the features (I've underlined the parts I entered).

```
RUN
IS THIS THE FIRST USE OF THIS SYSTEM? NO
PLEASE MOUNT AND RUN THE DIRECTORY TAPE
(I did as directed.)
THANKS. YOU CAN REMOVE DIRECTORY TAPE
WANT A SUMMARY OF COMMANDS? NO
(Surely I know them by now, I said.)
COMMAND? ADD
MEMBER (LAST NAME, FIRST & MIDDLE INITIAL)
? PINSKY, PAUL D
PLEASE MOUNT TAPE FILE #3
(As I did, I wondered if I should have added
    AND RUN IT to that message.)
ADDING A NEW RECORD FOR PINSKY, PAUL D
STREET ADDRESS
? 12300 HAMILTON AVE
CITY, STATE, ZIP
? PALO ALTO, CA 94301
DUES EXPIRATION DATE (MONTH, YEAR)
? MARCH, 1977
SYSTEM DESCRIPTION
? [illegible]
MAILING LIST (YES OR NO)
? YES
COMMAND? ADD
MEMBER (LAST NAME, FIRST & MIDDLE INITIAL)
? SMITH, ALVY RAY
ADDING A NEW RECORD FOR SMITH, ALVY RAY
STREET ADDRESS
? 10 GARBONZO LN
CITY, STATE, ZIP
? LOS GATOS, CA 94030
DUES EXPIRATION DATE (MONTH, YEAR)
? MARCH, 1980
SYSTEM DESCRIPTION
? ALTAIR 8800A
MAILING LIST (YES OR NO)
? YES
COMMAND? DELTE
SORRY, BUT DELTE ISN'T A COMMAND
([illegible])
WANT A SUMMARY OF COMMANDS? NO
COMMAND? DELETE
MEMBER (LAST NAME, FIRST & MIDDLE INITIAL)
? CALDWELL, ERNIE
PLEASE REWIND AND RESTART
THE TAPE (FD)
(Right. The first part of the alphabet is on tape 1
    [illegible] ADDs, so
    tape 3 has to be rewritten.)
PLEASE MOUNT TAPE FILE #1
([illegible])
CALDWELL, ERNIE
2203 POWELL ST
SANTA CRUZ, CA 95063
JAN, 1976
NONE
YES
STILL WANT TO DELETE IT? YES
([illegible])
COMMAND? END
PLEASE REWIND AND RESTART
THE TAPE (FD)
([illegible]
    [illegible])
PLEASE MOUNT DIRECTORY TAPE
([illegible])
THERE ARE 4 FILES IN THE LIBRARY
CONTAINING 347 RECORDS
SEE YOU AGAIN
```

The only things that aren't demonstrated in the sample run are the mailing LIST option, which prints names and addresses (we cut them out of the listing and use them as address labels), and the update operation, which happens whenever a file gets full.

So that's the record-keeping program. In one sense, it's finished – it works, it does what I wanted it to, it's useful. In another sense, it'll never be finished – as it gets used, inconvenient features come to light; occasionally other ways to organize it enter my mind. I guess the ultimate record-keeping program would be one that did absolutely everything all by itself, from reading the morning mail, to cashing checks, to sending notices to people who are behind in their dues, to keeping me company when nobody is around. That one will have to wait a while.

As The Smoke Clears . . .

Well. We've covered an incredible amount of material in these three articles. Possibly too much. Certainly too much to absorb completely if you really were starting from scratch in Part I. But even if it doesn't all fit together for you yet, I hope the feeling of what it's like to program got across. The feeling that when you actually start doing something, you're in for a struggle at times, some ups and downs. The feeling that to create a finished product you have to keep refining, testing, and revising your plans. No one has ever written even a medium-sized program by just sitting down at the terminal and pounding out lines of BASIC. If that was all there was to it, it wouldn't even be much fun. What I really like about programming is that it involves many apsects of life itself: dreaming, planning, testing, bringing your dreams down to the hard reality of what the machine can do, getting the bugs out, refining your plans, finally seeing your program run, using it, and then starting to dream about the next grand scheme. It's great! ■

Dan Stogdill VE3DWC
182 Victoria Street
St. Marys, Ontario
CANADA N0M 2V0

Getting By the Friden-8800 Communications Gap

-- interface made easy

Recently, a number of Friden keyboard-printers and associated controllers have appeared on the surplus market. This article is concerned with the TM 20K714 keyboard-printer and its companion TM 20K715 controller, which, in combination, formed the heart of the Burroughs 9350-2 Communications Terminal. While these are certainly impressive looking units, hobbyists have been experiencing difficulty in getting them "on-line" with their home computer systems. This article describes the hardware modifications and the software which were implemented to overcome the communications gap which existed between my 8800 and the asocial Friden.

Hardware

Hardware modifications to the 8800 and the Friden's control unit are relatively straightforward.

Photo by Doug Wood

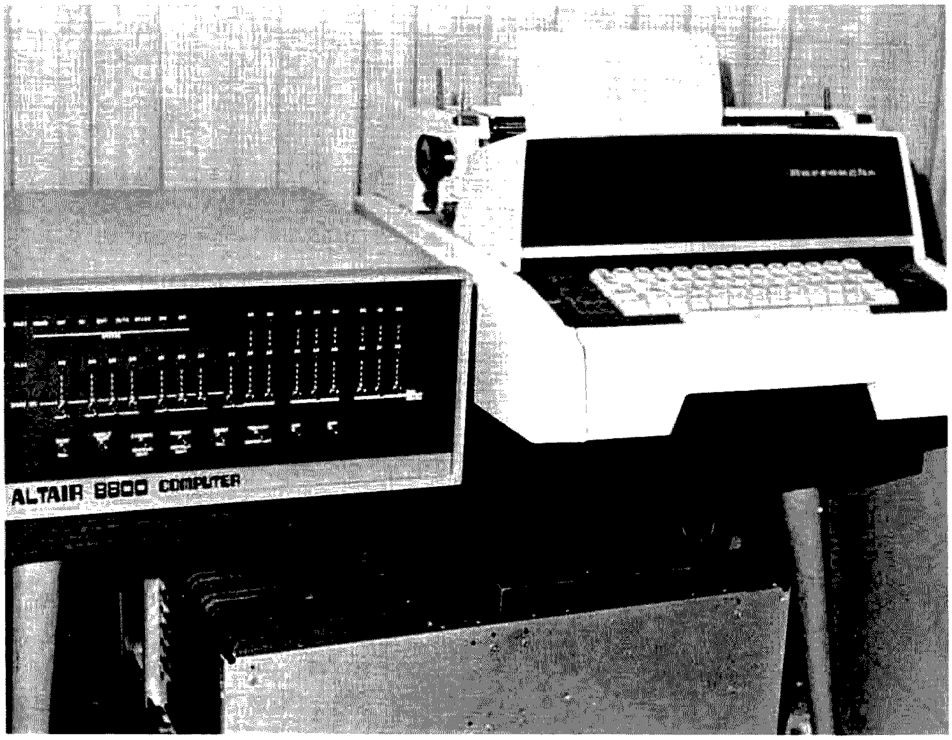

The Altair/Friden system. The 8800 is sitting next to the Friden TM 20K714 keyboard-printer. The TM 20K715 controller (without its cover) is visible under the table.

The input and output of the controller is RS-232-B compatible. In this configuration, the resting, mark, or logic 1 condition is more positive than +3 volts and the space or logic 0 condition is more negative than -3 volts. The EIA serial interfaces, which are being used by most hobbyists, conform to RS-232-C specs. This configuration defines the logic 1 condition as more negative than -3 volts and the logic 0 condition as more positive than +3 volts. Consequently, for 150 baud serial transmission to and from the Friden it is necessary to invert the polarity of the transmitted and received data signals.

Due to the fact that I have a Processor Technology 3P+S interface, the parts necessary to invert the signals already existed on the board (see Fig. 1). Pin 25 (the "Tx Out" of the UART) was connected as usual to the appropriate gate of IC5, which provides the RS-232-C output. The output of this gate was connected back to the input of a second gate of IC5. The output of this second gate now provided the appropriate polarity signal for transmission to the terminal, i.e., the output signal now conformed to RS-232-B specs as a result of

the additional inversion provided by the second gate. In order to receive data from the Friden, two gates of IC10 on the 3P+S were similarly cascaded. The additional inversion provided by the first gate makes the Friden's RS-232-B transmitted signal appear as RS-232-C to the second gate. The output of this second gate is connected to pin 20, the "Rcv In" of the UART.

For those of you who have other I/O interfaces, all that is required is to connect an inverter (such as a TTL NOR gate) between the data pins of the UART and whatever circuitry (be it transistor or IC) which presently boosts the I/O signals to the RS-232-C level. By inserting the inverters between the UART and the existing circuitry, you will invert the data signals and still maintain the RS-232 drive levels. Such would not be the case if the TTL inverters were external to the existing circuitry.

The only other hardware modification required is at the 25-pin connector of the Friden's controller. Tie pin 5 (Clear to Send Line) to pin 20 (Terminal Ready Line). With pin 5 positive and the ON-LINE switch activated, the orange ON-LINE light will be illuminated, confirming the status of the Friden. The Friden is now capable of transmitting to, and receiving from, the 8800.

To help clarify the logic of the software routines which I developed, it is beneficial to examine the terminal's transmission and reception procedures.

Keyboard Transmission Procedure

To transmit from the keyboard, assuming the terminal is operating properly "on-line," the operator presses the TRANSMIT key. This initiates the transmit mode, lights the TRANSMIT and SEND lamps, unlocks the keyboard, and causes the transmission of an STX character to occur. The operator may then enter a block of data, terminating it by pressing the ETB or ETX key. (Data are provided to the line as keyed, and also stored in the terminal's buffer for possible later retransmission.) For simplicity's sake, we will not make use of this retransmission feature. Following transmission of the ETB or ETX character, the SEND lamp then turns off and the terminal generates a Longitudinal Redundancy Check (LRC) character, which it also sends down the line to the computer. The terminal then waits for an ACK status character from the computer. If this is received when the transmission was terminated by an ETB, the terminal is cleared, the keyboard unlocks, and the SEND lamp comes on. The last block of a transmission should be terminated by an ETX character. Now, following reception of an ACK character by the terminal, the TRANSMIT lamp goes out and the terminal returns to the idle mode.

A conventional input routine will readily accept data from the Friden. Since instances of these are common, I will not get into a description of one here. However, a few suggestions concerning the routine are in order. You may choose to have the routine ignore the STX character, since it is not a piece of valid data with reference to your text. However, the routine should recognize the ETB/ETX characters as flags, and upon their detection send an ACK to the Friden. Your input routine should also ignore the terminal generated LRC character; like the STX, it is not relevant to the actual text being transmitted. You could use a routine, similar to the one presented later, which will use the LRC for detection of transmitted errors, but it is not necessary for the input routine. (As you will soon see, the LRC character plays a major role in outputting data to the Friden.) Note that it is important (necessary) to reply to transmissions from the Friden by sending back the ACK character; otherwise, the keyboard will remain locked up and the TIME-OUT and ERROR lamps will come on. Keep in mind that the Friden's buffer has a maximum capacity of 150 characters before the OVERFLOW light comes on.

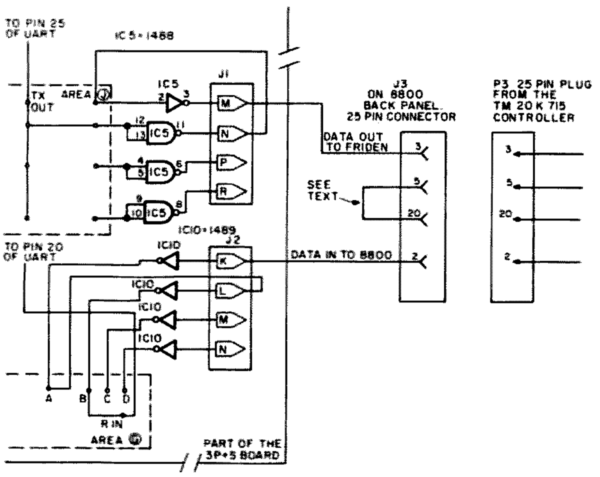

Fig. 1. The interconnection between the Friden's TM 20K715 controller and the Processor Technology 3P+S interface. Note the cascading of the top two gates of IC5 and IC10, to provide the necessary inversion.

Printer Reception Procedure

When the terminal is neither transmitting nor actively receiving, it is in an idle mode. Message reception begins with the detection of an STX character from the computer. As characters are received, they are placed in the Friden's buffer. Upon reception of an ETB/ETX character, the terminal generates an LRC character and looks for an identical LRC character to be sent down by the computer. If no LRC errors have been detected, the terminal transmits an ACK character to the computer and commences to print the contents of its (the terminal's) buffer. The terminal resets the green RECEIVE lamp and returns to the idle mode following reception of the ETX character.

The software presented below causes the 8800 to simulate the transmit conditions which existed at the Burroughs B3501 (the Friden's host computer). As can be seen, the requirements necessary to make the Friden accept data from the 8800 are much more stringent than the conditions required to make the Friden "talk" to the 8800.

The Software

For explanatory purposes, the program is divided into two main routines: BUFFIN and PRINT. BUFFIN is called up by the output routine of my MONITOR program. (Any general output routine can be used to call BUFFIN.) In my system, as the MONITOR outputs data the characters are displayed on a CRT display and stored in a buffer area in the 8800's memory, for eventual transfer to the buffer of the Friden. When a CR character is detected, BUFFIN calls up the PRINT routine. PRINT is responsible for the actual transfer of data from the buffer in the 8800 to the Friden's buffer, and for the generation and transfer of the "handshake" characters described previously. BUFFIN and PRINT will not interfere with the outputting of data to the

CRT display, other than causing a 4 to 7 second delay at the end of a CR-terminated line. This time is consumed by the 8800 transferring data from its buffer to the Friden's buffer, and for the detection of the Friden-generated ACK flag.

Use has been made of memory storage and the stack, to save the status of some of the registers which are redefined when BUFFIN and PRINT are called. The data are assumed to reside in register B prior to calling BUFFIN. The program, as presented, resides in the top 1K of my 9K memory; when you relocate it, pay close attention to the memory references. Nothing can make you wish you had taken up another hobby faster than having to track down an errant memory reference.

As you study the program,

BUFFIN	Pg. 041-100	345	Push H	Save main mem pointer
	101	041	LXI H	Initialize buffer pointer
	102	200		
	103	041		
	104	160	Mov M,B	Store char in buffer
	105	170	Mov A,B	Move char to Acc.
	106	376	CPI	
	107	015		Is char a CR?
	110	312	JZ	Yes, go to
	111	121		GOTCR
	112	041		
	113	043	INX H	No, increment pointer
	114	042	SHLD	store buffer pointer (H&L registers)
	115	102		in address 102
	116	041		pg. 041
	117	341	POP H	Retrieve main mem pointer
	120	311	RET	Return to calling routine
GOTCR	121	041	LXI H	Set buffer pointer
	122	200		To beginning address
	123	041		of buffer
	124	042	SHLD	Store buffer address
	125	102		in address 102
	126	041		pg. 041
	127	000	NOP	no operations
	130	000	NOP	helpful in debugging
	131	000	NOP	ditto
	132	000	NOP	ditto
NEXT	Pg. 041-133	106	MOV B,M	Get char from buffer
	134	315	CALL	Call up
	135	000		the location of
	136	042		the PRINT routine
	137	176	MOV A,M	Move char to Acc.
	140	376	CPI	
	141	015		Is char a CR?
	142	312	JZ	Yes, last char
	143	151		in buffer, go to
	144	041		LAST
	145	043	INX H	Increment pointer
	146	303	JMP	No, fetch next
	147	133		char in buffer
	150	041		by going to NEXT
LAST	151	041	LXI H	Initialize buffer
	152	200		for next pass
	153	041		
	154	042		Store buffer address
	155	122		in address 122
	156	041		pg. 041
	157	341	POP H	Retrieve main mem pointer
	160	311	RET	Return to main calling routine
PRINT	Pg. 042-000	076	MVI A	Test for first
TS 1	001	002		call of PRINT
	002	376	CPI	during this
	003	002		pass
	004	314	CZ	Yes, go to
	005	030		OUTSTX
	006	042		
	007	315	CALL	No, output the
	010	050		present character
	011	042		
	012	315	CALL	Generate the
	013	070		LRC character
	014	042		
	015	170	MOV A,B	Is present
	016	376	CPI	character A
	017	015		CR?
	020	312	JZ	Yes, dump
	021	100		the terminal's
	022	042		buffer
	023	311	RET	No, return to BUFFIN
	024	000	NOP	No operations
	025	000	NOP	helpful in debugging
	026	000	NOP	ditto
	027	000	NOP	ditto
OUTSTX	Pg. 042-030	170	MOV A,B	Store present
	031	062	STA	character in
	032	046		Temporary Storage 3
	033	042		

	034	006	MVI B	Load B with an STX
	035	002		
	036	315	CALL	Call the output
	037	050		routine
	040	042		
	041	075	DCR A	Decrement the Acc.
	042	062	STA	Store decremented Acc.
	043	001		in Temporary Storage 1
	044	042		for future reference
	045	006	MVI B	Retrieve present character from
TS 3	046	xxx		Temporary Storage 3
	047	311	RET	Return to calling routine
OUTIT	Pg. 042-050	333	IN	Input the
	051	006		control channel
	052	346	ANI	
	053	200		Ready?
	054	312	JZ	No, loop
	055	050		
	056	042		
	057	170	MOV A,B	Output the
	060	323	OUT	character to
	061	007		terminal
	062	311	RET	Return to calling routine
	063	000	NOP	No operations
	064	000	NOP	helpful in debugging
	065	000	NOP	ditto
	066	000	NOP	ditto
	067	000	NOP	ditto
GENLRC	070	356	XRI	Generate the LRC character
TS 2	071	000		Store the result
	072	062	STA	
	073	071		in TS 3 for
	074	042		future reference
	075	311	RET	Return to calling routine
	076	000	NOP	
	077	000	NOP	
DUMP	Pg. 042-100	006	MVI B	Load B with
	101	003		an ETX character
	102	315	CALL	Output the
	103	050		ETX to
	104	042		the terminal
	105	315	CALL	Generate final
	106	070		LRC character
	107	042		for this pass
	110	107	MOV B,A	
	111	000	NOP	
	112	315	CALL	Output the LRC
	113	050		
	114	042		
	115	000	NOP	
	116	000	NOP	
	117	000	NOP	
ACKIT	120	333	IN	Input the
	121	006		control channel
	122	346	ANI	
	123	001		Ready?
	124	312	JZ	No, loop
	125	120		
	126	042		
	127	333	IN	Input the
	130	007		data channel
	Pg. 042-131	376	CPI	
	132	006		Is it an ACk
	133	302		No, Loop
	134	120		
	135	042		
	136	076	MVI A	Yes, reset PRINT
	137	002		entrance to detect
	140	062	STA	initial call
	141	001		of next pass
	142	042		
	143	076	MVI A	Clear the LRC
	144	000		character address
	145	062	STA	
	146	071		
	147	042		
	150	311	RET	Return to calling routine

Table 1. Altair/Friden interface routines.

it will become apparent that the main calling routine could call PRINT directly, circumventing BUFFIN. You may elect to do so. However, if you use the Friden to get hard copy while you are getting soft copy on a CRT, you may have problems. Some programs, such as those for games, may only output half a line; they may then wait for an operator response before finishing the line and generating the CR character. This is OK on a CRT display, where printout is instantaneous (well, almost instantaneous) and not being timed. But remember that the Friden has a 25 second timer which starts with the reception of the STX character. If the ETB/ETX and LRC characters are not received in the 25 second interval, a TIME-OUT-ERROR condition will be displayed. Consequently, the Friden's buffer will be cleared and no printout will be obtained. Use of BUFFIN ensures the existence of a CR character in the 8800's buffer, and the generation of the all-important ETX and LRC characters by PRINT, within the timed interval. Alas, this is one shortcoming of this configuration of the Friden; it isn't particularly suited to interactive work.

Conclusion

Well, there it is. It isn't the most efficient program, memory-wise. (I don't profess to be a programmer.) But it does work, and the Friden produces a hard copy with a style all its own. Before configuring it to your system, be certain that you understand "everything" in the program. I wouldn't want to see anybody have to put the days (and sleepless nights) into this project which I put into it. Actually, it was fun, but it had its moments.

Good luck with it. If you have any difficulties, send an SASE and I will try to help you out. Keep on computing! ■

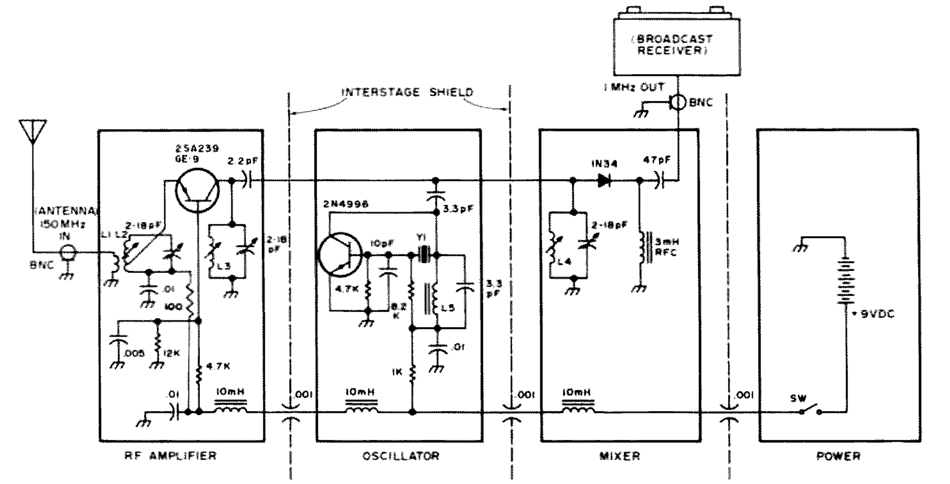

Fig. 1. Two meter to broadcast band converter. L1: 2 turn link on low end of L2. L2: 4 turns #20 on 7 mm slug-tuned form spaced to 5 mm; tap at 1½ turns from low end. L3, L4: 3 turns #20 on 7 mm slug-tuned form spaced to 5 mm. L5: 20 turns #30 closewound on 4 mm solid ferrite form. Y1: 48.5 MHz third overtone crystal, HC25/U holder (see text).

J. R. Johnson WA5RON
4558 Ave. A #205
Austin TX 78751

New Improved Repeater Monitor

-- 2 transistors

Another converter? Well, maybe there have been an awful lot of converter designs published in these pages, but take a careful look at this one before you say you don't need a converter. The unit described here is designed to let you tune a 1

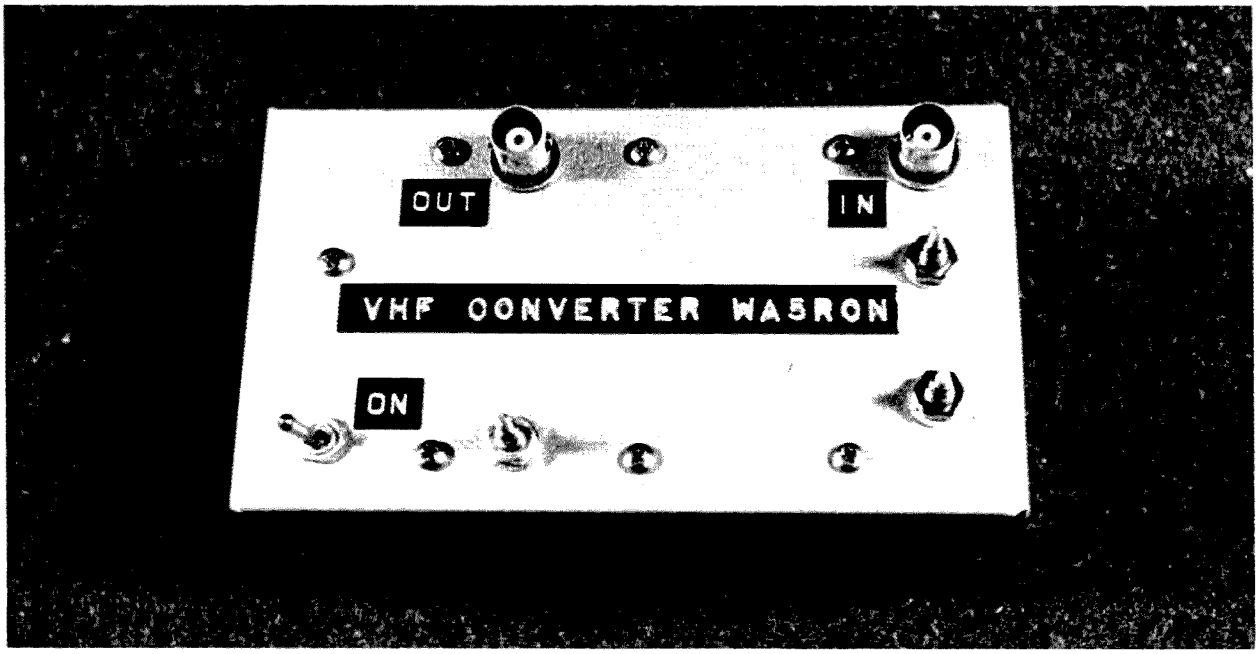

MHz band on two meters using your automobile radio. Even if you already have VHF gear in your car, chances are that you can only receive at a few crystal frequencies, and you would appreciate being able to tune the band to see what is going on. You could also use this converter in a rented car, your wife's car, or for one way communication when traveling with other (non-radio equipped) vehicles on the road. I suppose that you could even build it for the police frequencies or other VHF services.

I thought of building this converter one day when I noticed the push-button AM radio mounted nicely in the instrument panel of my automobile, and realized that it had not been turned on for at least two years (if you reside in Texas but don't like cow music, the AM broadcast band has little to offer). I thought how nice it would be if the coverage of that receiver were in one of the ham bands instead of 300 meters, and I decided right there to build a converter.

I found a simple converter design in an issue of *73*[1], and quickly built one up as in the article. The unit worked, a two meter QSO on one of the repeaters was heard, but it was competing (and losing) with all the 50 kW cow stations that were there, hardly attenuated at all by the converter in the antenna line. It appeared to me that any converter I built to work into the broadcast band as an i-f would have to have considerable isolation between input and output, and that at least one stage of rf amplification ahead of the converter was certainly desirable. The design that evolved is noteworthy in its attention to shielding, compartmentalization, and rf blocking along the power lead, considerations that are necessary in preventing the bleed-through of broadcast stations. Fortunately, automobile radios are already well shielded and bypassed, and they make sensitive i-f receivers with plenty of audio output.

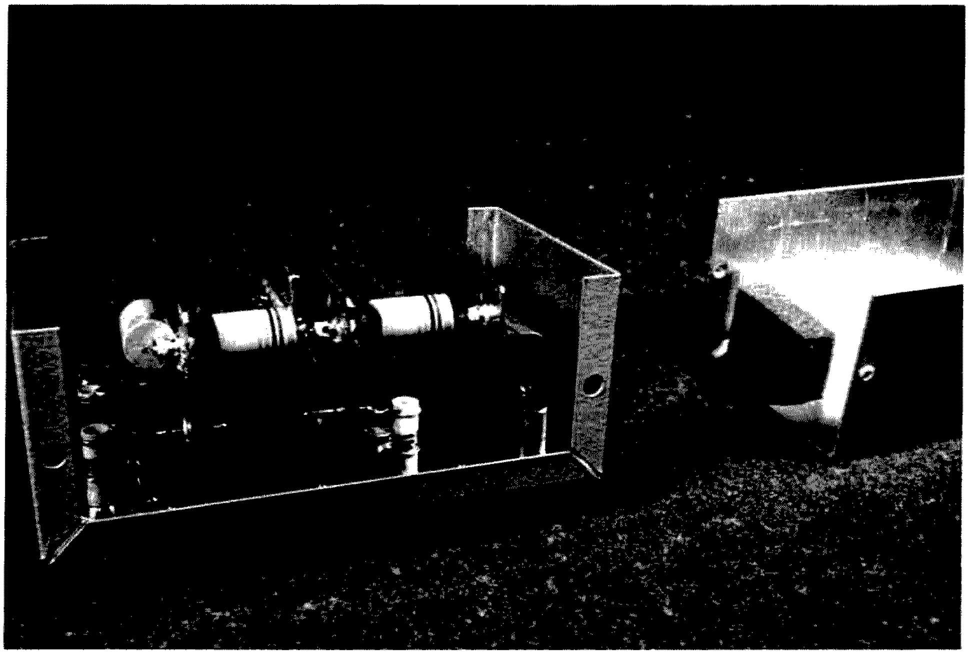

Converter interior is divided by copper shields into four compartments. Block of foam-rubber glued to case half keeps the battery in its clip on bumpy roads.

A 5.5 x 7.5 x 13.5 cm Bud minibox was divided into four compartments by shields cut from sheet copper (hobby or arts and crafts shop). A .001 uF feedthrough capacitor is mounted in each of these shields to pass (and bypass) the power lead, and two of the shields are also fitted with an insulated feedthrough (a grommet will do) for rf. The four compartments contain preamp, oscillator, mixer, and power supply. This last is a 9 volt battery that will run for a long time at 25 mA drain, providing you remember to turn the unit off when not in use.

The preamp is a non-FET design found in Japanese VHF receivers, with a link-coupled input circuit added to discourage the beastly broadcast band from getting deep into the converter. If you don't have a 2SA239 lying around, then any of the

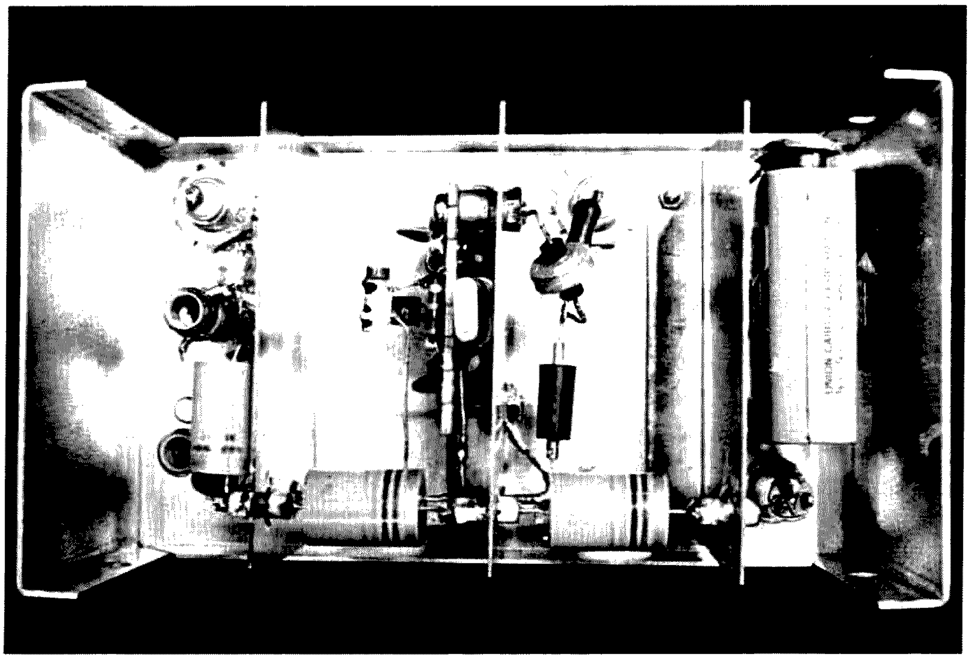

Converter sections are (left to right): 1 — Input and rf amplifier stage, 2 — Crystal controlled oscillator, 3 — Mixer stage and output, 4 — Battery and switch.

Shielding and separation of input and output sections, plus elaborate bypassing of low frequency signals on both rf and power leads is necessary to keep powerful broadcast stations from shoving their interference through the converter.

"equivalent" transistors they sell nowadays in the wholesale stores should work. I tried a GE-9 and it did just fine. Component leads must be very short or they will add inductance in series with the coils, which are quite small. Ground points can be soldered directly to the copper shield.

The oscillator was wired together on a small piece of vectorboard, held by machine screws and short standoffs to the copper shield. The oscillator stage was put between amplifier and mixer to maximize the physical separation between input and output. A third overtone crystal in the 48-49 MHz range is employed, giving a third harmonic at two meters that is used by the mixer stage. Choose a crystal frequency such that when multiplied by three, the resultant frequency is 600 kHz below the bottom of the range you would like to tune. For example, if you wish to tune the popular FM frequencies between 146 and 147, a crystal near 48.4667 could be selected. The third harmonic would be 145.4, putting 146 at the 600 kHz mark, and 147 at 1600. This should be fine for locating repeaters in unknown towns as you travel about, or just keeping tabs on local FM activity. If you would like to preserve the usefulness of the original dial calibrations, then you need a crystal cut for 48.6667 (146.0). This will put 146.55 MHz at the little "55" on the dial, and 147.6 will come in at "160" or "16" or whatever you have at the top end. When you order a crystal, include a drawing of the oscillator schematic, and tell the manufacturer what third harmonic frequency you want to get, as well as the 48 MHz third overtone frequency.

You will note that the tuned circuits in this converter have both variable capacitors and slug-tuned coils. This allows one to roughly peak the circuits using the capacitors with the box open, and then fine tune all stages after the unit is closed up and mounted in the vehicle. Cut a length of antenna cable to go between converter and radio, with a Motorola plug on one end and a BNC on the other. The car's telescoping whip antenna will work just fine when pushed down to quarter wavelength, and if the feed line is replaced with RG-58 or RG-59. The original automobile antenna cable seems to be some sort of cheapo shielded stuff with a kinky wire for a center conductor. I suspect that it was not intended for VHF, and certainly not very good for transmitting.

Many new cars seem to come with a solid steel whip. This could be used as is, but cutting it to quarter wavelength will improve VHF

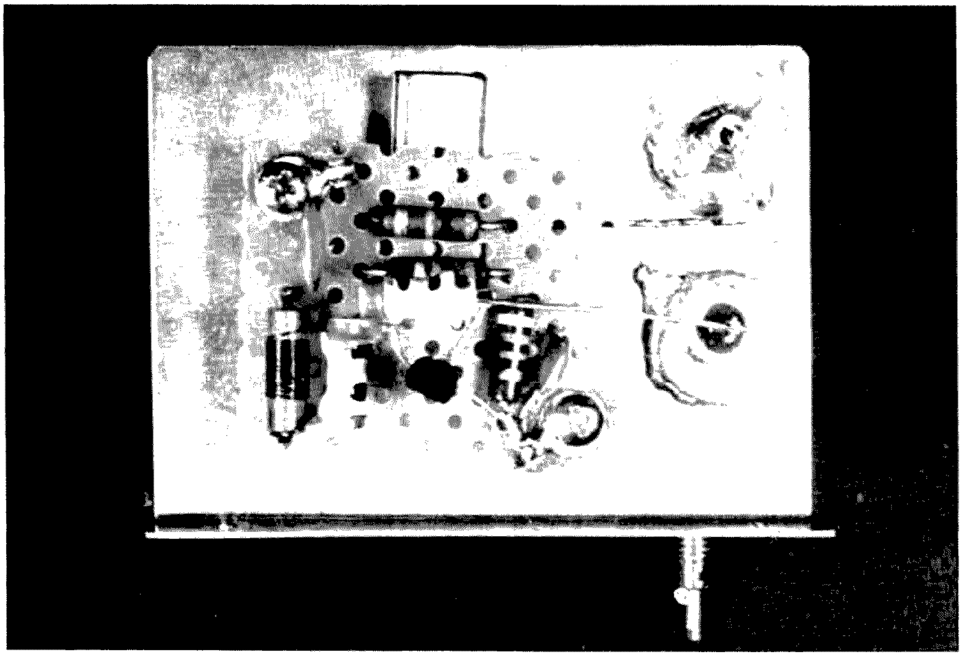

The oscillator board mounted on one side of a shield. Crystal socket and miniature crystal are the only components on the backside of the board. Power feedthrough capacitor is at upper right and insulated feedthrough for the rf line is below. Mixer stage (part of coil visible at bottom) is on the reverse side of shield.

reception and broadcast image rejection. I can't recommend those imbedded-in-the-windshield type antennas at all. This novelty was foisted on the car buyer at about the same time as the something-else-to-malfunction hideaway headlight. If you got stuck with one (or both) of these, you might as well punch a hole and mount a decent two meter antenna. After all, you are a ham, aren't you?

Plug the converter in and tune up the circuits on a signal somewhere near the middle of the band. Look for the antenna trimmer capacitor on the broadcast radio and tune for maximum signal reception. This capacitor may be found near the antenna input connector, or behind a hole above the tuning shaft that can be reached by pulling a knob (instead of pulling the whole radio). This adjustment does make a difference.

My little converter should give you good reception on two meters of both AM and FM stations. The ability of the automobile radio to slope-detect FM depends upon the sharpness of its i-f tuning. I found that I was able to improve the tuning and tracking across the band of both i-f and rf stages within the receiver by tweaking on the slugs. Getting the radio out and back into most modern automobiles is made easier by turning the vehicle upside down and moving the firewall forward a few feet.

You might even go so far as to cut into the original AM board and add one of the FM limiter and discriminator integrated circuits. I think that you will find, however, that FM reception is quite acceptable without any modification to the broadcast receiver. ■

Reference

[1] "Build the OTC," John Crawford WA4SAM, George Webber W1DVG, *73 Magazine*, January, 1966, page 74.

Put Snap in Your SSTV Pictures

-- using a $20 freq standard

E. Sommerfield W2FJT
49 Spring Road
Poughkeepsie NY 12601

Frequency measurement has always been an expensive problem for the radio amateur; the least expensive frequency counter costs about $150. Frequency measurement by counting is not the only method of measurement, however. Another less expensive, and equally accurate, alternative for specific applications is called frequency comparison. This article will describe a crystal calibrator/comparator for SSTV that will permit adjustment of various SSTV frequencies to within 1 Hz for as little as $20. The calibrator can either be built into the Robot Research 80A camera, or implemented as a self-contained unit for an additional $10.

Overview

The basic requirement in any frequency comparison system is an accurate frequency source. One such source is a crystal oscillator in the 1200 Hz to 2300 Hz range. Crystals in this frequency range are somewhat difficult to fabricate; however, crystals in the 256th multiple of this range (300 kHz – 600 kHz) are easily obtained. All that is required is a division by 256, and a frequency comparator.

In both the 80A and self-contained versions (Fig. 1), a crystal controlled square wave generator at 307,200 Hz (1200 Hz x 256) is fed into a 256 divider chain and emerges as 1200 Hz. This 1200 Hz signal is then compared to the 1200 Hz SSTV video. The resultant "beat note" is displayed on an LED (Light Emitting Diode).

In the 80A version, Fig. 1(b), the divider chain in the NORMAL mode is used to convert the 15 Hz horizontal input to a 1/8 Hz (8 second) vertical signal by dividing by 128; the last counting position is not used. In the COMPARE mode, the input to the 256 divider chain is changed to 307,200 Hz and the output at 1200 Hz is taken from the last position. The same "beat note" detector is used. If operation at 2300 Hz is desired, a crystal frequency of 588,800 Hz would be required. Since crystals in this frequency range cost $37.50, a crystal at 1/2 the frequency, 294,400 Hz, costing $13.50 is used, and the output is taken at the divide by 128, the next to the last, divider position.

CIRCUIT DESCRIPTION

The oscillator and comparator are both contained in an RCA CA-3046 5 transistor DIP module.

Oscillator

The oscillator is a standard 2 transistor free-running

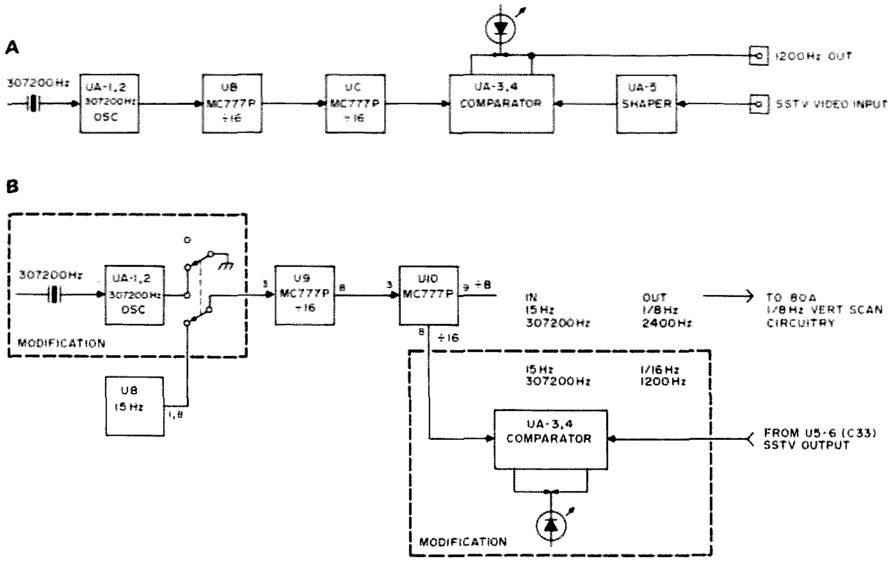

Fig. 1. Overview of crystal clear 1200 Hz.

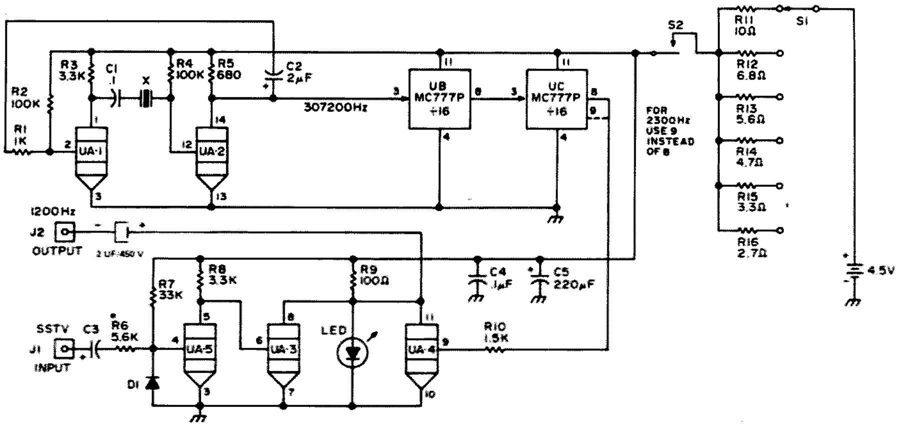

*Fig. 2. Self-contained crystal clear 1200 Hz. U1 — RCA CA3046; U2, U3 — Motorola MC777P; S1 — Archer 2751386; LED — Archer 276-041; S2 — Calectro E2-140; R1-R10 — ¼ W 10%; R11-R16 — ½ W 10%; D1 — Archer 276-612 or 276-114; chassis box — Calectro H4-742; battery holders — 1 cell, Calectro D3062; 2 cell, Calectro D3063. Calectro = Lafayette, Archer = Radio Shack. *R6 was designed for an 80A output greater than 2 V p-p and a low output source impedance. X — see Crystal Specifications.*

multivibrator in which one of the RC networks has been replaced by a crystal. The free-running frequency, originally controlled by the RC networks, is now controlled by a .01% tolerance crystal. The maximum crystal error is 30 Hz at 307,200 Hz. When the frequency is divided by 256, the error, which is also divided by 256, becomes .12 Hz; this is far more accurate than any SSTV requirements. The output of the oscillator is a square wave which when loaded is about 1.0 volts to 1.7 volts at 307,200 Hz. The oscillator was designed to have a minimum loading effect on the +3.6 volt regulated supply (80A). The 80A +3.6 volt supply already has about a 200 mA load, and the regulator transistor is "hot" to the touch.

Comparator

The comparator is composed of 2 inverters with a common collector load resistor and shunting LED. The LED has a minimum voltage threshold of about +1.2 volts. Current will flow in the LED only when BOTH transistors UA-3 and UA-4 are off. The amount of time that both are off, and in turn the LED is illuminated, depends upon the frequency relationship of the 1200 Hz crystal controlled reference frequency and the SSTV input frequency. As the two signals "beat" together, the LED will "flicker" at the rate of the difference frequency. Since the two signals will rarely lock together at the same frequency, there will always be some flicker. The comparator output when no SSTV video is inputted consists of a 1200 Hz square wave of about 1 volt p-p. This signal, with a very low source impedance, is ac coupled to the output jack, J2, and can be used as a 1200 Hz signal generator.

Divider Chain (Self-Contained Only)

The divider chain in the self-contained version is identical to the one used in the 80A, and consists of two Motorola MC777P binary counters connected in tandem. Since the divider chain counters are unloaded, I found that the most reliable operation was obtained at about +3.2 volts.

Switch (80A only) Fig. 3

Many methods were analyzed in order to find a method of injecting the 307,200 Hz signal into the 80A divider chain without disturbing the land pattern. The only solution found, however, was to "break" the land pattern on the back of the component board as shown in Fig. 4. Leads to the modification can be run from either the land pattern on the back, or touch soldered from the pins of the DIP modules on the front, depending on the skill of the user.

The switch, S1, provides the means by which the 307,200 Hz signal is injected into the divider chain.

Power Supply (Self-Contained Only)

The divider chain, unloaded in this application, works optimally at about +3.2 volts ± .2 volts. The load current is about 150 mA. A power supply could have been constructed for about

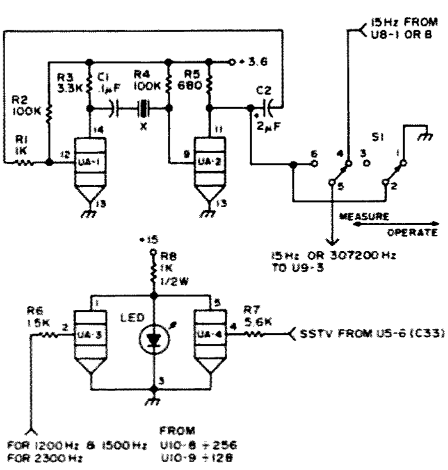

Fig. 3. 80A modification. All resistors except R8 can be as low as ¼ Watt 10%. U1 — RCA CA3046; LED — Archer 276-041; S1 — Calectro E2-105; C2 — Calectro A1-125; X — see Crystal Specifications; term strip — Calectro F3214. Calectro = Lafayette, Archer = Radio Shack.

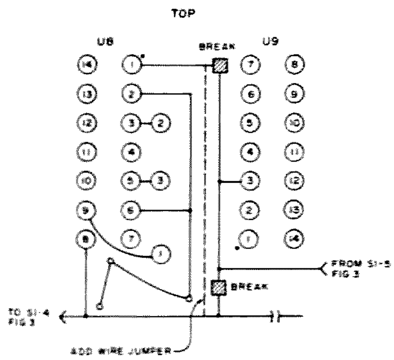

Fig. 4. 80A land pattern modification. Wiring (back) side of board.

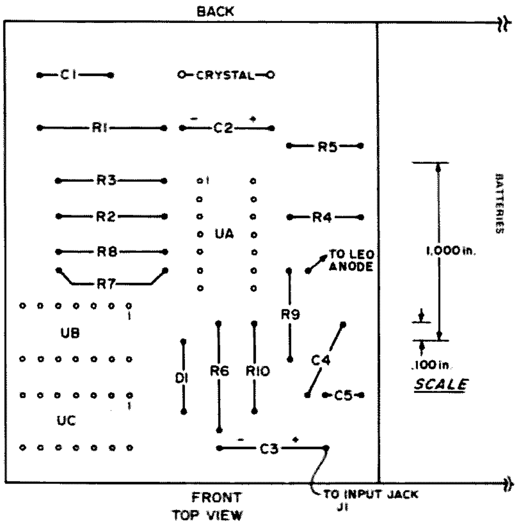

Fig. 5. Self-contained perfboard component locations.

$10, but the intermittent use of this unit pointed to the use of a battery supply for about $1. In order to obtain maximum use of the battery as its voltage decreases with age and use, a variable resistor, or as in my case, a switch with resistors (Fig. 2), was used to permit adjustment of the supply voltage. Too high a supply voltage causes a 2400 Hz output; too low a voltage results in no output. The correct voltage is easily obtained by first connecting earphones to the 1200 Hz output jack, J2, and then, starting at the maximum resistance, slowly reducing the resistance until the 1200 Hz signal is heard.

CONSTRUCTION

Self-Contained

The self-contained version layout is shown in Fig. 5 and the photograph. It is constructed on a 2.5" x 6" piece of .100 x .100 inch perfboard (Archer – Radio Shack – #276-1394). R11-R16 are mounted on the chassis, supported between S1 and S2.

80A

The 80A layout requires more effort, but it has the advantage of a more built-in feature. Fig. 6 shows the location of the components. The crystal socket, switch S1, and the module DIP socket were epoxied onto the component board. The terminal strip was anchored using the screw that attaches the component board to the camera chassis.

Operation

Adjust the 80A output control, R50, to 2/3 full scale (self-contained only). In order to measure only 1200 Hz, the SSTV voltage controlled oscillator (VCO) must first be forced into a 1200 Hz only mode. This can be done in the 80A by shorting the collector of Q8 to the emitter of Q8, by grounding the junction of resistors R34, R35 and R134. This method will result in a sync frequency of about 1190 Hz. The reason for the 10 Hz difference is that the normal "on" condition for Q8 is not a shorted collector to emitter, but rather a .1 volt collector to emitter. Since the more positive the collector of Q8 is from -15 volts, the lower the frequency, 0.0 volts = 1190 Hz, whereas 0.1 volts = 1200 Hz.

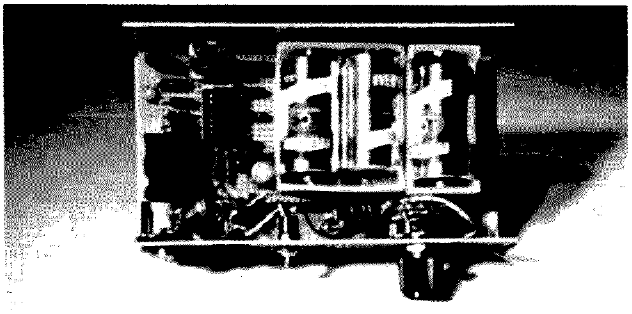

After the 1200 Hz only condition is satisfied, adjust R42, SYNC, so that the LED just barely flickers. This setting will result in about 1210 Hz when the short is removed. If a more accurate adjustment is desired, readjust R42 away from zero beat in a clockwise direction so that the LED flickers at about 10 beats/second, and then remove the short. This should result in an output very close to 1200 Hz.

Important Note (80A Version Only)

In the compare mode, the 1/4, FULL, 1/2 vertical scan switch must be in the FULL scan position in order to allow the divider chain to divide by 256.

Crystal Specifications

The crystal used in my model was ordered from International Crystal Mfg. Co. Inc., 10 North Lee, Oklahoma City OK 73102, according to the following specifications for 1200 Hz output: Frequency – 307,200 Hz, .01% tolerance; Type – GP; Calibration – room temperature; Holder – F605 (HC 6/U); Circuit Load – use Fig. 2.

The frequencies for other SSTV outputs are:

OUTPUT	CRYSTAL
1200 Hz	307,200 Hz
1500 Hz	384,000 Hz
2300 Hz	294,400 Hz (divide by 128)

Other Configurations

Other configurations that used the crystal controlled 1200 Hz output signal gated directly into the SSTV output during sync time were considered and analyzed. The 80A VCO mode was found to maintain more than sufficient stability at considerably less cost. These other designs are available by SASE.

Conclusion

The calibration capability described in this article provides the missing link towards ease in obtaining accurate alignment of not only the SSTV camera, but also the SSTV station monitor. An A-B comparison using the crystal controlled source calibration vs. a Yaesu model YC-355D has shown no significant difference in accuracy, but a substantial difference in cost. ■

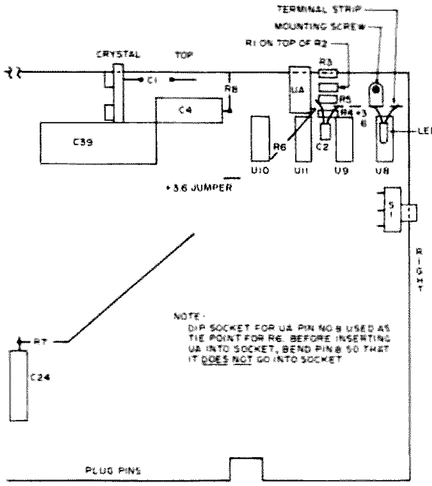

Fig. 6. 80A component positioning.

Burt Yellin K2STV
30 Eleanor Lane
Plainview NY 11803

What's All This Wire-Wrap Stuff?

--talk about cold solder joints!

The advent of digital electronics in amateur radio has paved the way for a new method of construction practice already widely used in industry. This is called the Wire-Wrap* method. One might ask, why Wire-Wrap? Just talking about the number of lines coming from an IC could make one's head reel. For example, let us assume that we have thirty 16 pin ICs, and that we have just one wire per pin as either a voltage, a ground, or a signal line. We now have 16 x 30, or 480 lines to interconnect. Can't you just picture the complexity of the printed circuit board required to accommodate such a circuit? Note that I'm talking about a 16 pin IC in this case. Now we are well into LSI and MSI with 24, 36, or 40 pin ICs becoming very popular. This is one reason why industry has gone the Wire-Wrap route. The mechanical design effort in laying out such a PC board is a time-consuming, costly operation. Most of the time a double-sided PC board with plated-through holes would have to be used. And in even more complex circuits, multi-layer boards would have to be designed.

A second advantage of Wire-Wrap over PC is the ease with which a design change can be accomplished. All one needs to do is unwrap the wire and put the new one in between the proper two terminals. We all know what it is like to modify a PC board. I have several scarred fingers from a slip of the knife as proof.

Now let's talk about some of the electrical and mechanical attributes of Wire-Wrap. A Wire-Wrap connection consists of approximately seven turns of 30 AWG solid copper wire. The wire is wound about a 0.025 inch square terminal in a helical manner, without the aid of solder. As the wire is wound about the terminal, the corners of the terminal bite into the wire, as the wire notches the sharp corner of the terminal. In this manner, a gastight, oxidationfree joint exists between the terminal and the wire. As the connection ages, a solid state diffusion process takes place, which enhances the mechanical strength of the connection. Through exhaustive tests it has been determined

* The term "Wire-Wrap" is a registered trademark of Gardner-Denver Co.

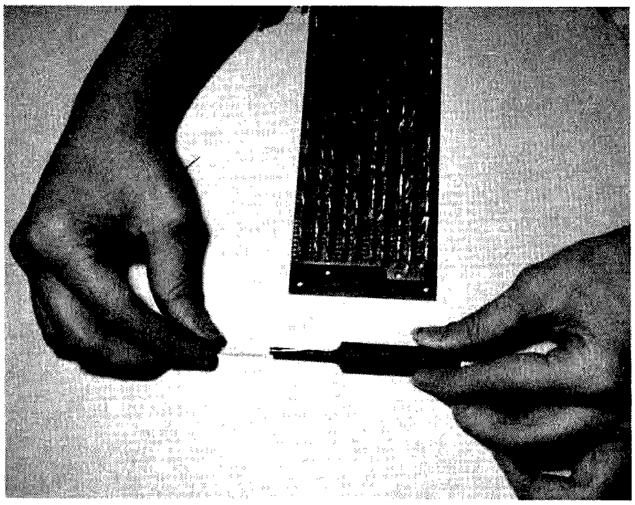

Fig. 1.

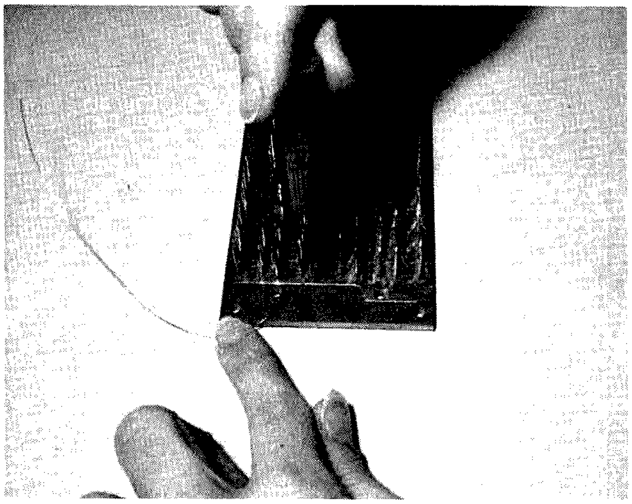

Fig. 2.

that a Wire-Wrapped connection has a life expectancy in excess of forty years. This tremendously exceeds the reliable life of a solder connection.

Wire-Wrapping can be accomplished through several methods. There are hand Wire-Wrap tools which are readily available and inexpensive. If many wraps are to be done, I would suggest the electrical hand gun; where a small run of similar boards are to be Wire-Wrapped, there is the semi-automatic method. A "head" with a Wire-Wrapping bit is indexed over the proper terminal through the use of a numerical controller. The fully automatic method would be chosen on a large run of similarly Wire-Wrapped boards.

Let's go through a step-by-step procedure to show the simplicity of the Wire-Wrap process:

Step 1. Insert the stripped end of the wire into the tool, as shown in Fig. 1.

Step 2. Place the tool with the wire over the terminal (Fig. 2).

Step 3. Twist the tool clockwise, until the stripped portion of the wire is used up in the wrap.

Fig. 3 shows a completed "modified" wrap. "Modified" means that there is approximately one turn of insulation around the terminal for strain relief.

Well, that about "wraps" it up. ■

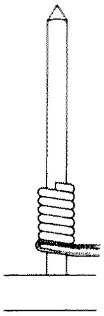

Fig. 3.

The staff (both of us) at ON_LINE wish to acknowledge our readers and advertisers as being the true cause of our successful first year. Our thanks and wishes for a 1977 full of events, satisfaction and peace.

with an Altair . . . it has an 8800 with floppy disk, Imsai, Wavemate, Jolt, Apple, Southwest Tech, Sphere, Ebka, Intelligent Systems, Astral 2000 . . . various cassette systems such as the National Multiplex . . . printers by Southwest Tech, Teletype, Dec, MPI . . . terminals by Lear, Burroughs, Intelligent Systems . . . etc.

With this lab Kilobyte is able to check out the many systems available to the hobbyist . . . to interface I/O systems . . . to check memory and other new modules . . . and (most important) to check out programs submitted to Kilobyte for publication or for royalty distribution.

KILOBYTE TO SUPPORT COMPUTER STORES

Older hobbyists will recall that publisher Wayne Green predicted the proliferation of the computer store even before the first one was opened. Kilobyte will be available in every computer store that meets the Kilobyte requirements . . . as will the Kilobyte program cassettes.

In August 1975 the very first computer store was opened (in California) . . . by August 1976 there are over 50 recognized computer stores . . . and perhaps 150 one-man shops which hope to grow into stores soon. Considering the growth of the hobby computer it will not be surprising to many if there are about 500 stores by August 1977 . . . and 5000 by 1978.

Since only hobbyists have the wide background in all phases of computers to provide the services of a computer store, a great many of the readers of Kilobyte will find themselves faced with an economic opportunity of a lifetime . . . once they are qualified. This is all the more reason for getting your own computer system . . . and reading Kilobyte.

KILOBYTE TO COST ARM AND LEG AT STORES

Since Kilobyte is going to be a good deal better than the other hobby magazines it is only reasonable that it should be a little more expensive. $2.00 per copy at your stores.

WHO IS BEHIND KILOBYTE?

The staff of 73 Magazine will be putting Kilobyte together . . . it is a staff of over 40 people and every aspect of publishing is done right at the big 73 Magazine headquarters building in Peterborough except the actual printing of the magazine. Kilobyte requires very large web offset presses and equipment, so it will be printed in Columbus, Ohio . . . and mailed from there.

The editor, John Craig, has been running the I/O section of 73 Magazine since last February . . . a section of about 40 pages of hobby computer articles and advertising every month. Before that John was one of the editors of the famed Cabrillo newsletter. John works out of Lompoc, California.

At the Kilobyte/73 headquarters the type is set, articles proofread, pasted up, artwork prepared, advertising sold and prepared for publication, subscriptions and readers service handled by a professional group which has been working together for years. Add to this the new Prime computer system and you have a first rate organization. Visitors to New Hampshire are invited to join the thousands of amateur radio operators who visit the HQ and say hello.

WHO IS THE KILOBYTE PUBLISHER?

Wayne Green is not totally unknown in the hobby computer field. It was his frustrations with trying to get a computer system to use with 73 Magazine that resulted in his idea for Byte magazine in 1975. In a period of seven weeks Green managed to find an interim editor, get enough articles to get the magazine started, get mailing lists of prospective subscribers, write letters for subscriptions, get envelopes printed, send out the subscription letters and get in enough subscriptions to warrant printing 15,000 copies of the first issue . . . far too few, it turned out . . . but a lot more than the 2000 envisioned at first.

Green's visit to the microcomputer manufacturers in August 1975 was reported in detail in Byte and did a lot to help this small new industry grow. Green has followed this 1975 visit up with one in August 1976 and this will be reported in the first issue of Kilobyte.

Green started publication of 73 Magazine in 1960 and gradually built it from a one man operation to the present staff of over 40. 73 is the fastest growing ham magazine . . . over 30% increase during the first six months of 1976 . . . and soon will be the largest in circulation in the ham field. It is already more pages than any others and has more advertising.

Green, who is listed in the latest issue of Who's Who, in addition to being the editor and publisher of 73, starting Byte last year (no longer connected with Byte), also is the writer of a nationally syndicated newspaper column on CB radio.

MANUFACTURERS WHO CANNOT ADVERTISE

The 73 Magazine policy of not permitting firms to advertise where there are problems of stability, of service, a questionable product, etc., will be carried on in Kilobyte. Unless current problems with Minimicromart, Processor Technology, E&L instruments and Ebka are resolved you may not be seeing them in Kilobyte.

CAN YOU GET RICH VIA KILOBYTE

Of course you can! With Kilobyte paying about double what the other hobby computer magazines are (you *do* want to read the best authors, don't you?), you can parlay any field of expertise of your own into enough money to buy more hardware. Be sure that you know what you are talking about . . . and that you explain it simply, avoiding all the usual buzzwords. Write to Kilobyte, Peterborough NH 03458, or John Craig, RFD 100D, Lompoc CA 93436, for instructions on writing for Kilobyte . . . it's easy . . . and lucrative.

COMING ARTICLES

Articles have been promised for Kilobyte by some of the top people in the field . . . a rundown on just about everything available . . . a sort of super buyers' guide is being prepared by Eric Stewart of Computers and Stuff. This will probably run to three parts to cover everything. Eric started with his first store in Provo, Utah and then moved to the San Francisco area . . . he is moving to a larger building to try and keep up with the business.

George Morrow (Morrow's Micro Stuff) will be writing on cassette systems and interfacing . . . on a fantastically simple prototyping system he uses . . . Dennis Brown (Wavemate) will be writing about the benefits of wire wrapping and also give us the inside dope on how the Wavemate was designed . . . and why. We've also been promised good authoritative articles on the Jolt system, the new Godbout PACE computer, the Apple computer and the Z-80 CPU coming out by MITS. Marlin Shelly of MPI (printer) has promised an article on parallel I/O standards and connectors . . . George Tate of Computer Mart (Orange, Ca) will be writing on I/O configurations . . . Dick Wilcox, a teacher of computer systems in elementary schools will be writing about fundamental software terms . . . monitors, debuggers, editors, executives, and such.

WHAT ABOUT THE I/O SECTION IN 73?

This will continue, as it has, to bring fundamental computer info to radio amateurs through the pages of 73 . . . as well as computer applications for amateurs such as pointing beams for DX automatically, reading Morse Code, etc.

WHEN WILL KILOBYTE START?

The first issue will be out in December 1976 . . . dated January 1977. The deadline to be sure of getting this issue is November 1st . . . after that you may or may not, depending upon the demand. Remember what happened to Byte subscribers who waited.

Exploding the Power Myth

-- to set the record straight

Hubert Woods W9IK/XE1ZX
Calle Las Nubes 1760
Guadalajara 5
Jalisco, Mexico

It is widely believed, and often written, that reflected waves on an rf transmission line represent power flowing in the line toward the load and away from the load. Encouraged for many years by the teaching of a prestigious amateur organization, many amateurs take this belief as an article of faith.

But it is not only amateurs who so believe – some professionals do, also. They construct ingenious explanations of transmission line phenomena that are based on power flowing forward and backward on a transmission line terminated by a load not equal to the characteristic impedance of the line. They devise equations containing terms purporting to give the magnitude of power flowing toward the load and of power flowing in the reverse direction, and by subtracting one from the other get the "net power" flowing into the load. Never mind if the "forward power" is sometimes considerably larger than can be accounted for by the energy supplied by the transmitter in unit time – that is the way it must be, they say. Some of these professionals attempt to prove that "real power" flows both ways on the line, by referring to the readings of so-called directional wattmeters, and overlook the unproved and hidden assumptions that their explanation involves.

In this article I will attempt to show that power cannot correctly be said to flow in transmission lines in any direction. I will also point out inherent fallacies in some of the arguments presented to support the notion of power being associated with reflected waves. To accomplish these purposes, it will be essential to have a clear understanding of the basic definitions of energy and of power, and of the differences between them. In physics, *energy is the capability for doing work.* A bent spring possesses energy; a charge of gunpowder possesses energy; an electric current possesses energy because it can run a motor, or generate heat in a resistor, or be transformed into electromagnetic waves which then do work. In such cases, the work done (or heat generated, or electromagnetic waves produced) is also energy in other forms, in compliance with the laws of the conservation of energy.

Power is defined in the ARRL *Radio Amateur's Handbook* (50th edition, p. 22) as *the rate of doing work.* However, the ARRL now prefers (ref. 1) a somewhat different wording, taken from the *IEEE Standard Dictionary of Electrical and Electronic Terms* (1972 edition), as follows: *Power is the time rate of transferring or transforming energy.* To avoid any misunderstanding with the ARRL over the correct definition of power, I will use the one it prefers. A careful look at this definition shows clearly that the words "transferring" and "transforming" in that definition refer to energy, not to power. The definition would become absurd if it were taken to mean that "power is the time rate of transferring or transforming power." Therefore, the thing that is being transferred in an electric circuit or transmission line is energy, not power. The thing being transferred, energy, is what flows on the line, and any assumption that the definition supports the conclusion that power flows on the line is wholly unwarranted.

There is another cogent reason supporting the view that power does not flow in transmission lines. Power is a scalar quantity, that is, a quantity completely specified by a number (of basic units, such as the Watt) and having no direction in space, as contrasted with a vector quantity which requires not only a number but also a direction for its complete specification. Because power has no direction, it cannot correctly be said to flow in any direction (ref. 2). But what of the power quantity (E) (I) (cos Θ) as measured at the line input? Does this mean that power is flowing in the line? No, it does not. It means that the flow of electric energy in the line is such as to cause work to be done at the rate of (E) (I) (cos Θ) at some suitable place or places in the circuit, namely at one or more resistive loads (ideally, only in the equivalent radiation resistance of the antenna).

I know that it is commonplace to speak of power as flowing in rf and other electric circuits, and such informal speech often carries a useful, if inexact, meaning. But, in dealing with the rather complex phenomena on rf transmission lines, it becomes essential to use such terms as energy and power in accordance with their exact meanings.

Having discussed the basic definitions of energy and power and their significance, we can now examine some of the fallacies offered in support of the conclusion that reflected waves on a transmission line represent or contain power flowing in two directions.

1. An equation has been published (ref. 3) in the following form:

$$P = \frac{(E^+)^2}{Zc} - \frac{(E^-)^2}{Zc} = \text{"Net Power Flow"}$$

in which, to use the author's words, "the first term to the right of the P expresses the power associated with the incident wave, and the second term, the reflected power."

This equation treats power as if it were a vector quantity; it clearly implies, as do the author's words, that power flows both ways on the line simultaneously, and that power flowing one way can cancel, partially or wholly, the power flowing the other way. All of this is in direct conflict with the fundamental definition and meaning of power, as previously discussed.

2. It is sometimes claimed that the readings of "directional wattmeters" prove that power flows both ways on the line, thus representing power associated with the incident and reflected waves (ref. 4). These instruments are actuated by samples of the line current and line voltage (ref. 5). There is no uncertainty about the derivation of these meter readings. However, endowing these readings with meaning with respect to power in the incident and reflected waves requires two assumptions: first, that the incident and reflected waves have a physical existence on the line; and second, that they represent power flowing on the line. Neither of these assumptions is automatically shown to be correct by the meter readings themselves, which, as stated, are actuated by line current and line voltage, and which would continue to be the same readings obtained from the same line current and line voltage with the same phase angle *even if the incident and reflected waves had no physical existence on the line.* Thus the "directional wattmeter" readings do not prove that there is any power associated with these waves, or, in fact, that these waves have any physical existence.

3. When the line and load are considerably mismatched, the "directional wattmeter" indicates a much larger forward power (it is said) than can be accounted for by the energy output capability of the transmitter. This has been said to be "a normal condition which must exist in order for a mismatched load to absorb all the power delivered by the source, while at the same time reflecting a percentage of the total power it receives" (ref. 6). But as power is the time rate of transferring or transforming energy, how could the time rate of transferring or transforming energy *anywhere on the line* be greater than the energy put into it in unit time? This would be manufacturing energy out of nothing!

In summary, I have shown, I hope, by recourse to basic definitions and their meanings, that power does not flow in transmission lines or other electric circuits. I feel that there have been errors in some of the statements that have been published in support of the contrary view. It must therefore be concluded that reflected waves do not represent power flowing in a transmission line, in any direction. Let us hope that professionals (and amateurs, too) will take seriously the basic definitions of the terms they use so frequently. I confess that I have not always done so. ■

References

1. Personal letter from the ARRL, dated Jan. 29, 1974.
2. Personal letter from Dr. Chester H. Page, SI Units Coordinator, National Bureau of Standards, dated May 3, 1974. Dr. Page is also Chief, Electricity Division, Institute for Basic Standards, National Bureau of Standards. In view of the high position Dr. Page holds in the field of electrical definitions and their meanings, I quote, with his permission, the following sentence from his letter: "You are correct; power does not flow – energy flows."
3. Maxwell, M. Walter, "Another Look At Reflections," Part 3, *QST*, Aug., 1973, p. 43.
4. *Ibid.*, p. 42.
5. DeMaw, Doug, "In-Line RF Power Metering," *QST*, Dec., 1969, p. 11.
6. Maxwell, M. Walter, "Another Look at Reflections," Part 4, *QST*, Oct., 1973, p. 22.

I/O REPORT

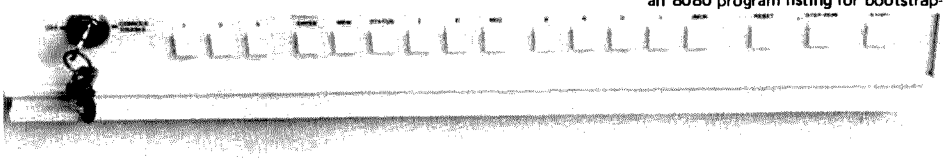

from page 74

have any nifty software control of starting and stopping the tape.

The manual provided with the reader is excellent. It includes the theory of operation, construction (if you buy it in kit form), parts list, interfacing instructions, schematic, board layout, and most importantly, an 8080 program listing for bootstrapping programs in from the reader.

Interfacing the OP-80A is a breeze. The diagram of the I/O socket shown here illustrates the interface signals. These include the eight data lines, an acknowledge and a ready line (the S1 and S2 status inputs are optional and can be whatever you desire). The "data ready" (or Reader Data Available) is generated from the sprocket hole and the acknowledge signal must be generated by either hardware or software from the computer. (We interfaced the OP-80A to our Varian V-73 and its paper tape controller was kind enough to provide us with an acknowledge signal. For an 8080-based system, an output port would be used to provide this signal through software.)

One item which is missing from the "posed" photograph is a small high-intensity lamp (using a 12 volt auto lamp) which is placed directly over the read station. The light intensity "alignment" procedure is simply a matter of placing the light over the read station until the SP (sprocket) LED comes on.

The OP-80A is available from Oliver Audio Engineering, 7330 Laurel Canyon Blvd., North Hollywood CA 91605. The price is $74.50 in kit form or $95.00 assembled and tested (add $2.50 for shipping and handling). A lamp kit option is also available at $19.95 and a tape transport unit will be available in the future (for you lazy types).

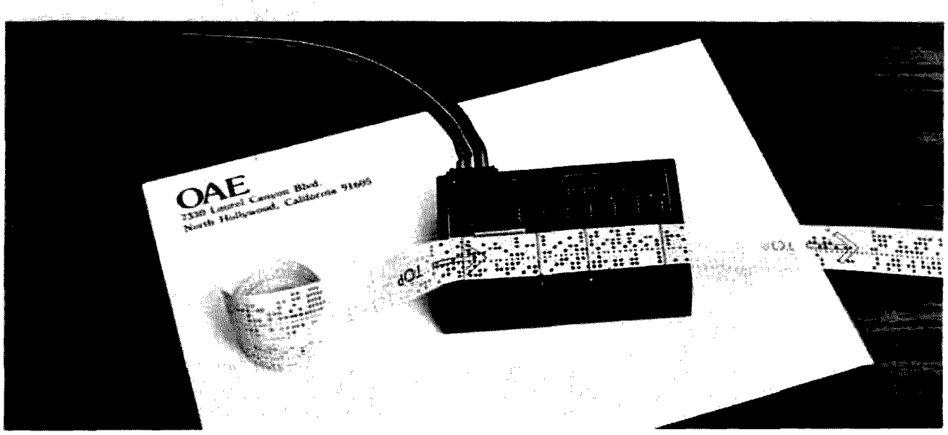

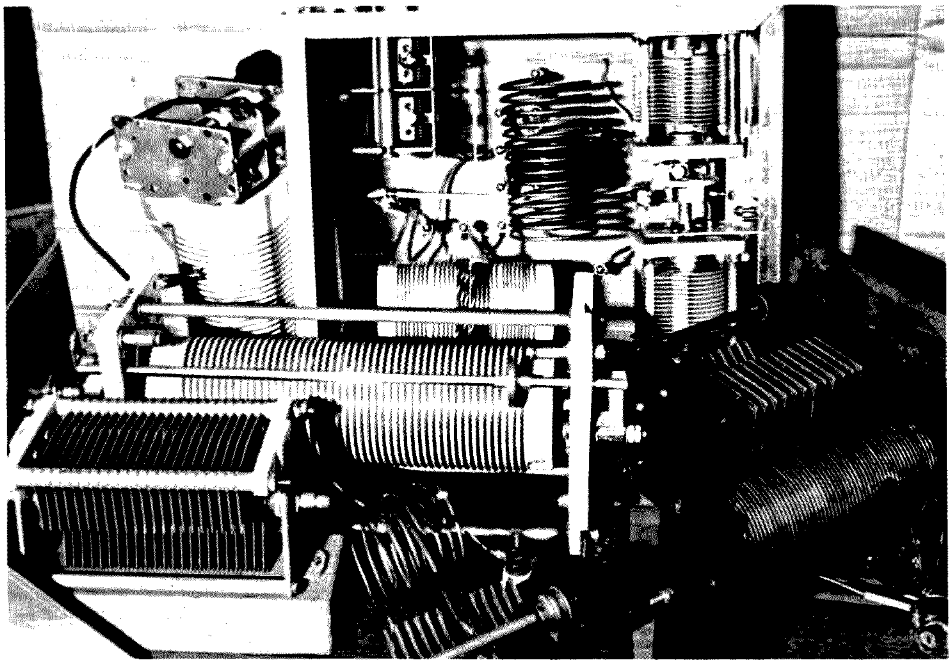

The graveyard of abandoned matchits.

F. G. Rayer G3OGR
Longdon Heath
Upton-on-Severn
Worcs. WR8 ORJ
England

Exploding the SWR Myth

-- to set the record straighter

As a regular user for years of end fed antennas, I have felt there should be some correct length, and some ideal or best way to tune the antenna and couple it to the transmitter. The latter item – the fabulous matchit – would peak up transmitted signal strength very well, rather like tuning a receiver pre-selector when receiving. (Admittedly a flatter response was expected, due to lower Q.)

Signal strength reports from contacts did not confirm this, nor did a remote pickup antenna, with diode and indicating meter. So tests were made to try to discover if the fabulous matchit existed, and to find it if it did.

As it had been amply demonstrated that an rf ammeter in the antenna lead gave maximum reading for maximum radiated signal, if operating frequency and the whole antenna-ground system remained unchanged, such a meter was used as the indicating instrument.

The Beginning

Putting the antenna directly on the Tx, Fig. 1(a) was the start. PA tuning and loading controls were far from their usual settings with the PA dipped, but PA grid and anode currents were noted, and also antenna current.

The roller-coil favorite matchit B was then introduced, set to its usual values. Complete readjustment of PA tuning was needed. Loading was set to get the same plate current as before. Hey ho, antenna current was exactly the same. Nor was any improvement possible, with changes to L and C, followed by PA re-tuning.

Never mind: Parallel tuning of this antenna length had often been used, so Fig. 2(a) was substituted. With customary adjustment of this parallel matchit, current shown by the rf meter was exactly as before. So both L and C were grossly changed from their "correct" values for the band, and tap T was moved to unusual positions. Provided it was still possible to load the PA to the noted input, antenna current was the same with all changes made.

Oh, Dear!

An excellent matchit well known for its ability to provide 1:1 swr on coax from the Tx was substituted, as shown in Fig. 2(b). With the swr at 1:1, antenna current stood at exactly the same figure as before. With the excellent matchit mistuned, 5:1 on the swr and PA dipped, antenna current was exactly the same.

Perhaps the antenna length was responsible? It was cut to length by the book, and was possibly humming with resonant energy?

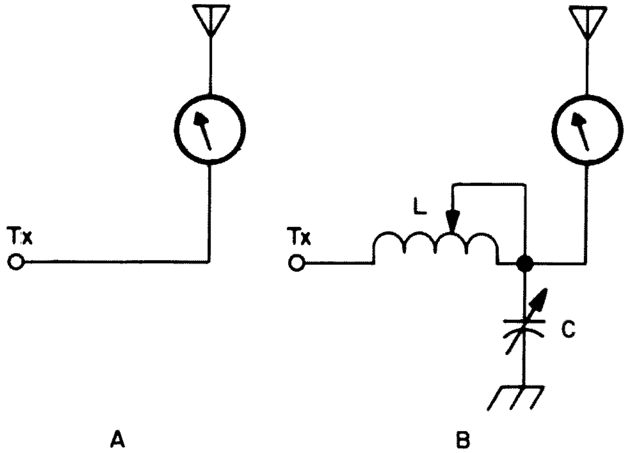

Fig. 1. Direct connection and roller coaster matcher.

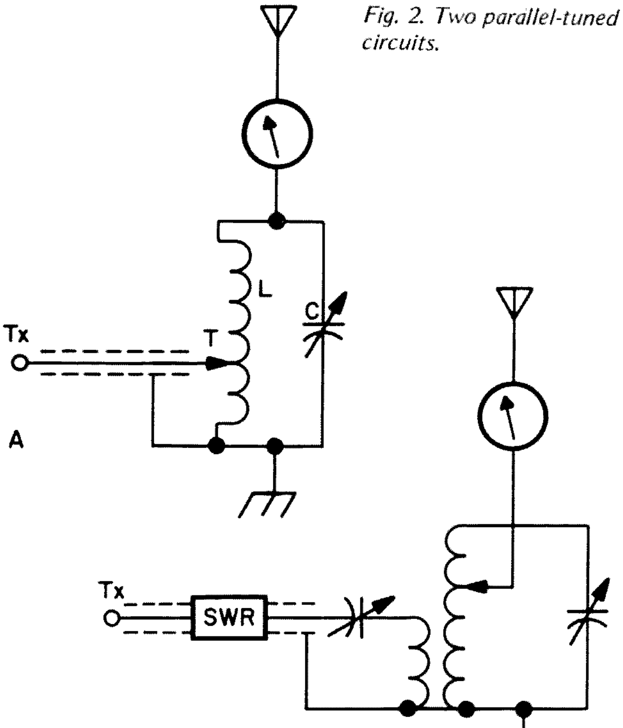

Fig. 2. Two parallel-tuned circuits.

No, changes to its length naturally altered the rf current, but starting again from Fig. 1(a), all remained the same.

Conclusion

Provided the PA can be loaded and dipped, any matchit, or indeed none at all, will give exactly the same signal strength. So what our favorite matchit does to justify its shelf space comes under other headings – it can bring an otherwise impossible antenna impedance within the range of the transmitter, it can let the Tx see a line with a low swr, if the Tx or a filter needs that, and it can be unfavorable to harmonics (especially Fig. 2). But apparently it will never change you from S5 to S9 plus, or indeed from S5 to S6. ■

Robert L. Fischer WB8BEL
599 Sherwood Drive
Huntington WV 25704

Bring a Dead Band to Life

-- beacon CQer

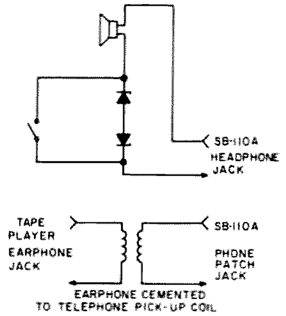

Fig. 1. Circuitry used to operate Heath SB-110A transceiver as a beacon station.

This revolutionary new concept in repeater design centers around an endless loop cassette cartridge. A thirty second CQ with calling instructions was recorded on a ninety second endless loop.

As the loop runs through a tape player, one hears the CQ followed by a minute of silence. When the player output is patched into a transceiver VOX circuit, the result is instant beacon. A word of caution on the patch: The dc component of the tape player output should be isolated from the VOX input to prevent nuisance tripping.

The only disadvantage I found with this simple arrangement is that it requires constant attendance at the transceiver. There are many times when I would prefer to listen for calls in my family room with the rest of the family. An extension speaker was easily added, but the wife would absolutely not condone the no-signal noise of the receiver. Obviously, a squelch circuit was in order. On the other hand, I had no desire to mutilate the transceiver or decrease its sensitivity.

An interesting problem indeed – how can the noise be squelched with minimum circuit disturbance? Low voltage zener diodes filled the bill. Two diodes, back to back in series with the speaker, will conduct only when their zener voltages are exceeded. Audio output level is adjusted so that the noise level is just below zener breakdown voltage. A SPST switch was added to short out the zeners for weak signal work.

I realize that this crude design could use some refinement, but I leave that to the perfectionists in our midst. ■

Dave Faucher WA1UQC
23 Freedom Drive
Collinsville CT 06022

The IC-22 Walkie

- - portabilization with nicads

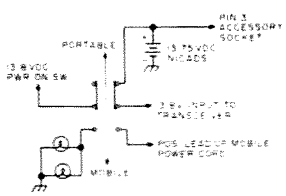

Fig. 1.

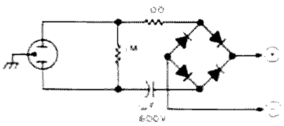

Fig. 2. Charger.

It all started with a desire to have a multi-channel, top quality performance, portable transceiver that I could carry with me on field trips, CD activities, repeater maintenance or just about anywhere.

Looking at the problem from several different angles, I immediately saw that the cost of a new HT was just about out of the question. External battery packs are usually cumbersome and heavy — even messy. I popped the covers off my ICOM IC-22A and to my surprise there was plenty of room for an internal nicad battery pack. In fitting the batteries inside, I wanted to make the fewest possible outside modifications to the rig, so as not to detract from its clean-cut design.

The first step in this modification is to turn off the light bulbs. Next, insure that the normal external power source and the internal nicad pack are not paralleled together. I mounted a miniature DPDT toggle switch on the rear panel to accomplish this objective. I needed a battery charger input, so I connected the positive side of the nicads to pin 3 of the 9 pin accessory socket; pin 8 is negative ground.

Before installing the batteries, I decided it would be best to eliminate the possibility of the batteries rubbing against the bottom of the PCBA solder etchings, so I placed a piece of heavy gauge clear flexible plastic over the PCBA etch side.

Due to the voltage require-

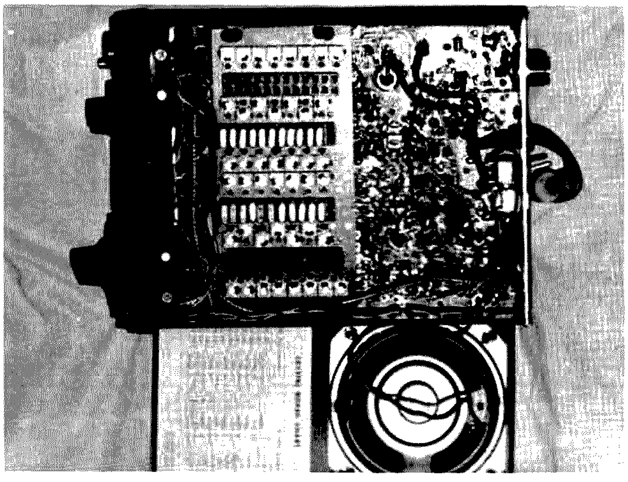

Empty space available.

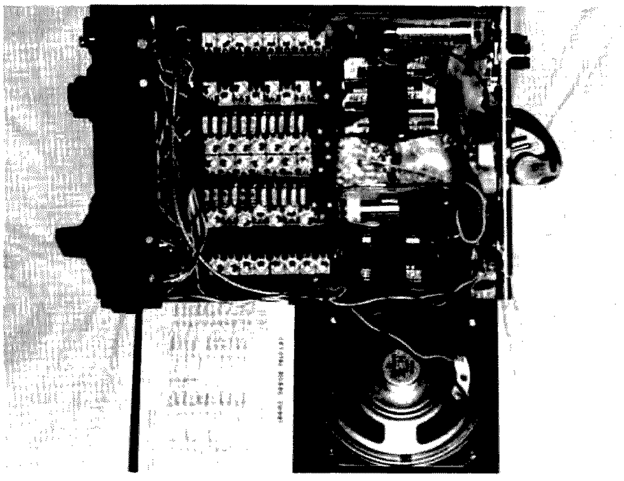

Batteries installed.

ment for optimum performance of the IC-22A, I hooked up eleven AA nicad cells in series, making a 13.75 V dc battery source. Current drain with the lights off is approximately 40 mA standby, 85 mA RCV, and 550 mA transmit in the 1 Watt position. If you choose to replace the speaker with a smaller one, you could fit in two plastic 6 pack battery holders. But if you do as I did, and leave the original speaker in, you need one 4 pack, one 3 pack and two double pack battery holders. It is not as neat looking, but it does fit without changing the original speaker.

For a nice finishing touch you might make up something sharp, like a black leather suede carrying case with a shoulder strap. Then hook up a rubber duckie with a right angle connector, and away you go. ■

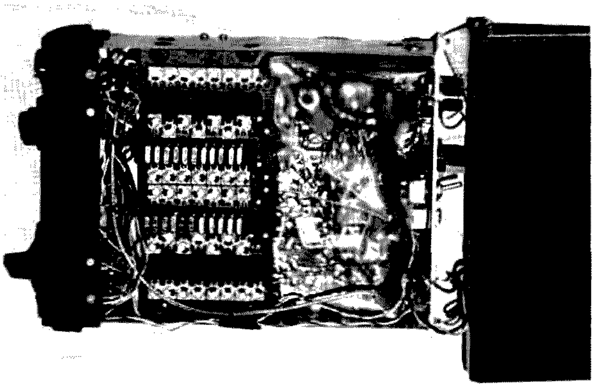

Flexible plastic protective covering.

The Latest in Counters

-- an inexpensive modularized 50 MHz system

Geoffry W. Kufchak WA1UFE
869 Reed Ave.
Akron OH 44306

I finally decided I needed a relatively simple but effective counter. It had to be easy to build and it had to be able to count to 50 MHz without using a prescaler. After giving the design approach considerable thought, I decided on the plug-in board method. Then I proceeded to break up the total circuit into the individual circuits that make up a frequency counter and design PC boards for each of them. Counter circuits are pretty basic and there are only so many ways to design one, so this one may look a lot like others. I did, however, add a few ideas of my own.

One of the worst features of any counter is the awful current drain that the LEDs in the display manage to consume. Even with current-limiting resistors, 8 digits at 20 mils per segment can pull 1.12 Amps. I got around this by scanning the display so that only one LED is on at a time. This reduces current consumption by one eighth. I also decided to get rid of that ridiculous number of resistors, since scanning the LEDs gave me a 10% duty cycle. This meant that the average current through the LEDs would be 10% of the maximum current without resistors. Checking the specs for the LEDs I was using (MAN8) showed that at 5 volts the maximum current per segment would be 192 mils (OUCH!). But 10% of that is 19.2 mils and is within the maximum of 40 for the LED. The maximum current drain is now reduced to 134.4 mils when the display is showing an 8.

Another change I made is the use of a 74LS90 as the first counter in the chain. The 74LS90 is pin replaceable for the 7490 and will count in excess of 50 MHz. Some designs use the 74196, which uses inverted logic as compared to the 7490. The 74LS90 uses the same logic so board design is simplified.

I also added the option of

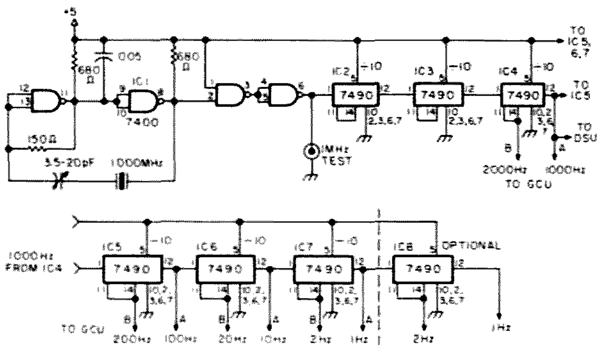

Fig. 1. Timebase Oscillator and Divider.

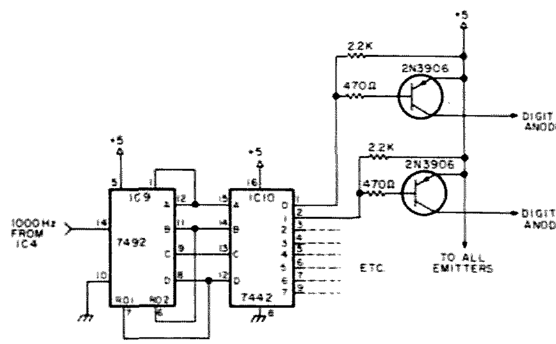

Fig. 2. Display Scan Unit.

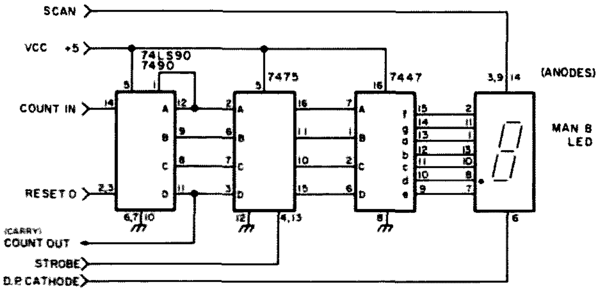

Fig. 3. Decimal Counter Unit.

selectable gates, .01 sec, .1 sec, 1 sec, and 10 sec.

Breaking the counter down into individual boards, there is the Time Base Oscillator and Divider (TBOD), Display Scan Unit (DSU), Decimal Counter Unit (DCU), Gate Control Unit (GCU), and Preamp. All these units plug into a master board which has all the interconnecting circuit paths etched into it.

Approximate cost, less cabinet, is about $85.00 using all new parts, less if you have a well-stocked junk box and can make the boards yourself.

Timebase Oscillator and Divider

The TBOD is constructed on a PC board that is 3.5" by 2". Due to the compactness of the circuit it was necessary to use jumpers for the frequency outputs. A double-sided board could be made and eliminate that need, but in the effort for simplicity I decided against it. The TBOD consists of a 7400 NAND gate for the oscillator and a series of 7490s wired to divide by 10 in the bi-quinary mode. This method gives a symmetrical square wave at the output, needed for proper gate timing. Also, the divide by 5 signal is brought to the edge of the board, as these frequencies are also needed. 1000 Hz is also used by the Display Scan Unit, so it has two outputs.

I was curious as to the stability of this circuit, since the crystal I'm using only has a tolerance of .005%, so I checked it against a 1 MHz signal with a known accuracy of 1×10^{-9}. I was quite surprised to find that it was as good as 1×10^{-8} after a one hour warmup, and held its accuracy hours later.

Provision has also been made for bringing the 1 MHz signal out to the back panel of the counter for checking it against another signal.

This is also the most expensive of the units, costing about $15.00 with all new parts.

Display Scan Unit

The DSU is also built on a 3.5" by 2" PC board. The DSU has a 7492 divide by twelve counter wired to reset to 0 at the count of ten. The BCD outputs of the 7492 are connected to the BCD inputs of a 7442 decimal decoder, which is used to scan the display LEDs by switching the Vcc on and off through a PNP switching transistor. The emitters of the transistors are connected to positive 5 volts and the collectors are routed to the anodes of the LED display. Pull-up resistors are used to keep the transistors biased off, along with current limiting resistors on the bases. If 5 volts does not provide enough brilliance from the LEDs, a slight modification on the board will enable you to use a higher voltage for switching to the display. Try not to use more than 10 volts, however. More than that and the LEDs may burn out.

The outputs of the 7442 are active low. That is, the output selected is at ground and all others are high. Grounding the base of a PNP transistor turns it on and switches Vcc to the proper LED. Because the 7492 is wired to divide by ten, the scan rate figures out to 100 Hz. This is fast enough to eliminate any flickering, but allows enough brilliance for normal room lighting.

With all new parts, the DSU costs about $6.25.

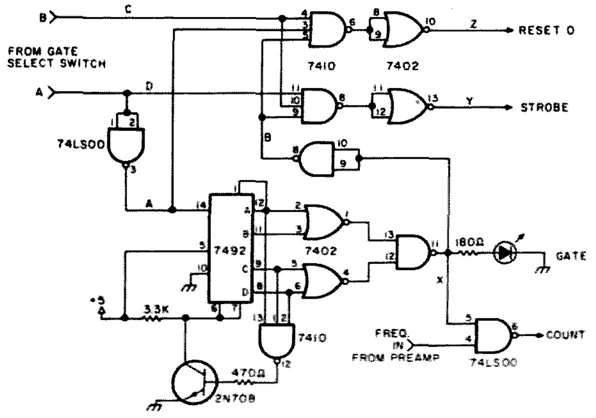

Fig. 4. Gate Control Unit.

Decimal Counter Unit

The DCU is constructed on a 3.5" by 1.7" PC board. Except for the first DCU, all use standard 7490s as counters. The first DCU uses the 74LS90 by Fairchild, which was described earlier, for a 50 MHz count rate. Also, each DCU has a 7475 quadruple bistable latch, a 7446 or 7447 BCD to seven-segment decoder, and a socket for the LED. Any Monsanto LED may be used here as the pin-outs for most of them are identical. I used the MAN8, which is yellow, simply because I had them. However, the large .6" MAN6 or the .27" MAN7 will also plug in. Both of these are red.

For the LED socket, use the already preformed side mount socket or be cheap and bend the leads of a wire-wrap socket like I did.

The 7475 is used to transfer the accumulated count of the 7490s to the display when strobed by the Gate Control Unit. A logic one is needed on the clock inputs to transfer the input information. When the clock is low, the latch will store the information until the next

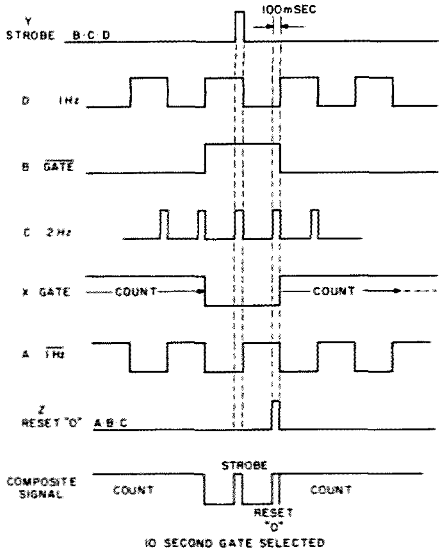

Fig. 5. Gate Control Timing.

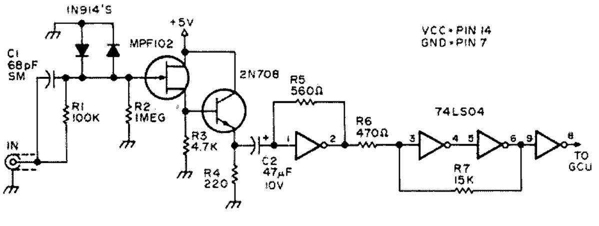

Fig. 6. The Preamp.

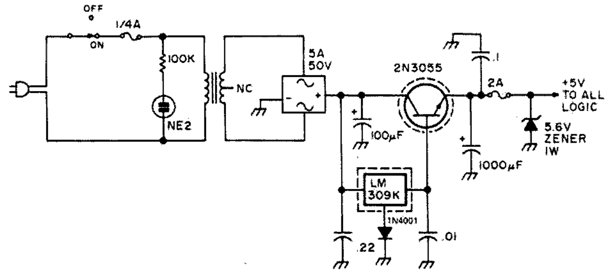

Fig. 7. Power Supply.

strobe pulse. If the input has not changed, the output won't either. If new information is present at the input, the outputs will change to agree with the inputs.

The outputs of the 7475 are connected to the inputs of the 7447 which decodes the BCD to the proper coding to display the corresponding decimal number on a seven-segment readout.

Four of the DCUs have provision for using the decimal point so that the display can be wired to show the frequency in either kHz or MHz. One need only wire the proper decimal point to ground through the gate select switch.

The cost of the DCU will be about $6.50 for the 50 MHz version, and a little less than $6.00 for the standard version.

Gate Control Unit

The original circuit I tried for this was unsatisfactory, as the time needed for the strobe and reset 0 pulses was equal to the gate time. On the faster gates this was no problem, but on a 10 second gate it could be annoying having to wait 20 seconds for updating the display. So I redesigned it with the basic idea that I wanted a 10 second gate and the resets to occur within one second. A look at the timing diagram may help in understanding the operation of this circuit. Refer to the schematic for lettered lines. Note also that the board has a gate LED incorporated on it, eliminating the need to front panel mount one. It will show through the display window to the right of the digits.

The GCU is built on a 3.5" by 1.7" PC board. It consists of four ICs: a 7492, divide by twelve; a 7410, triple-three input NAND gate; a 7402, quadruple two-input NOR gate; and a 74LS00, chosen also for the high toggle speed.

Let us assume we have selected a 10 second gate. Through the gate select switch, 1 Hz and 2 Hz signals are routed to the inputs of the GCU. One gate of the 74LS00 is used to invert the 1 Hz and apply it to the clock input of the 7492. Normally this IC would count to twelve and reset to 0, but with the 7410 gate connected to the A, C, and D outputs, it will be forced to reset at the count of eleven. Zero detecting the outputs with a NOR gate and NAND gate will produce a pulse that is high for 10 seconds and low for one second, which is the time between reset and the next input cycle. Another gate of the 74LS00 is used to invert this pulse.

By combining the inverted gate pulse with the 1 Hz and 2 Hz signals, and then inverting the outputs of the other two gates of the 7410, the Strobe and Reset 0 pulses are generated and transferred to the rest of the counter. Through trial and error it was found that there had to be a minimum amount of time between the two pulses and this circuit provides it. Unfortunately, due to the minimum pulse width needed to reset the 7490s in the counter (50 nsec), the fastest gate time allowable is .001 second. This is probably faster than needed anyway.

The current limiting resistor for the LED should be chosen for the particular LED being used. Generally, about 180 Ohms should be right. Any color may be used; I used yellow to match the display.

This is also the cheapest unit, costing about $4.00 with all new parts.

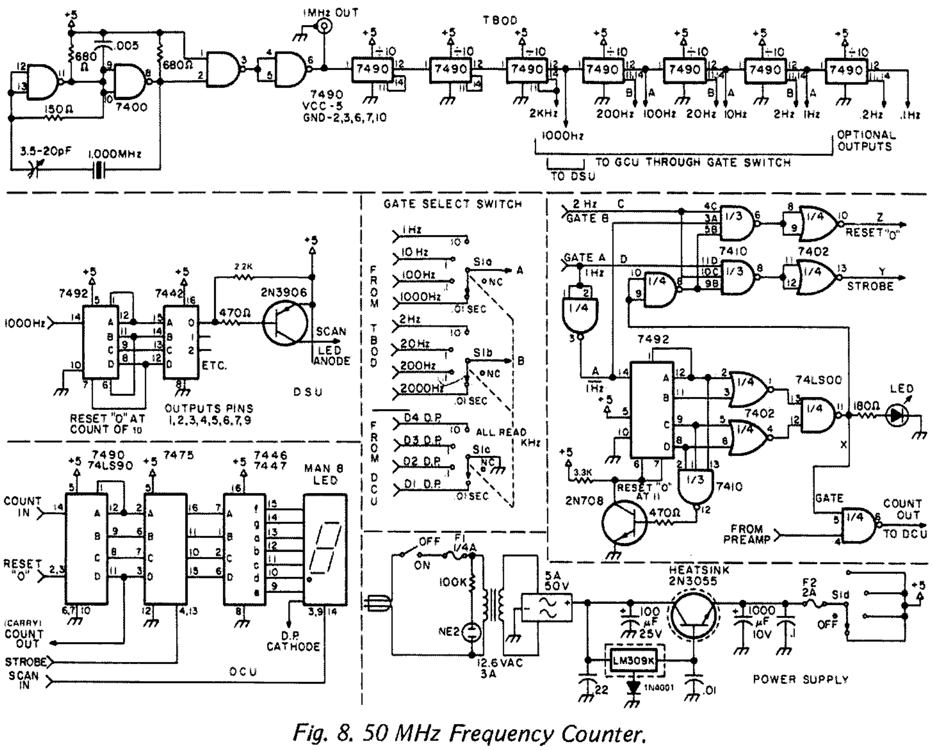

Fig. 8. 50 MHz Frequency Counter.

The Preamp

I finally found a Preamp circuit that would work. I had tried several others that had been published, but had terrible sensitivity. This one I discovered while reading back issues of *73*. It is from the "Latest K2OAW Counter Update" in the May, 1975 issue by WB2UKP. Some minor changes were made, though. I used a 74LS04 to obtain a 50 MHz working speed, a 2N708 for Q2, and a

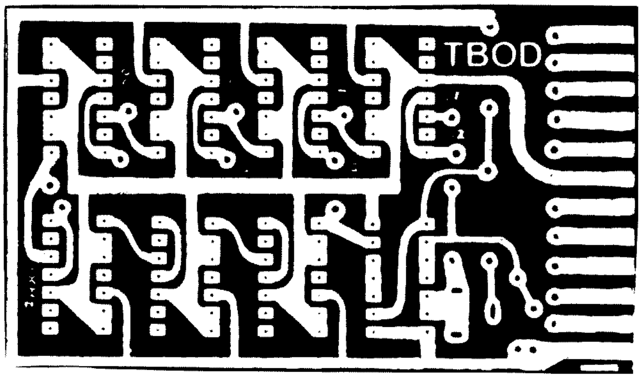

Fig. 9(a). TBOD board (full size).

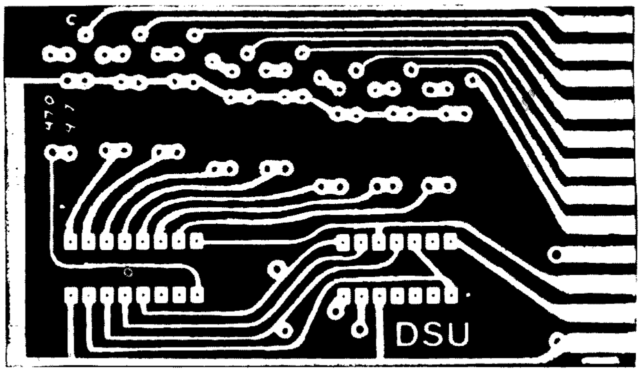

Fig. 10(a). DSU board (full size).

slightly different input scheme. Finally, sensitivity became livable. A scope and rf signal generator (HP 608D) showed a sensitivity of 10 mV from 10 MHz on up. At audio frequencies, about 50 mV was needed for reliable operation.

The reason for all that extra space on the board layout is that I hope to, in the future, incorporate an on-board prescaler using the 11C90 by Fairchild. Provided, of course, that the circuitry is as simple as that using a 95H90. With the 11C90, the counter should operate in excess of 500 MHz.

Power Supply

Due to the heavy current demand, about 1.3 Amps, I decided on the circuit shown to regulate the five volt line, rather than use two LM309s. All components can be mounted on the rear panel with appropriate mounting hardware and solder lugs. Heatsink the pass transistor and LM309K. You can use a bridge rectifier module or individual diodes. They should be rated for at least 5 Amps at 50 volts. The transformer is a 12.6 V ac at 3 Amps, or parallel two smaller rated ones. Use a 2N3055 for the pass transistor or a suitable substitute with similar ratings. The neon pilot light is not really needed, but I like little frills to dress up a front panel.

The fuses should be of the fast blow type. Fuse holders mounted on the rear panel is the best method, but they can be soldered in inside the chassis. The power switch can be eliminated so that the counter is on whenever the line cord is plugged in.

General Construction and Testing

After etching and drilling all the boards, install the jumpers first because two on the GCU are under ICs. Next put in the resistors and capacitors, and then the transistors and ICs. The LED sockets on the DCUs come next; then install the LEDs. Install the sockets on the master board.

Wire the power supply in the case, along with the front and rear connectors and switches. Secure the master board to the case with small angle brackets, at least 4 inches behind the front panel. This will allow the boards to be installed and removed easily. Or the master board may be hinged at the bottom to tilt back. Next do the main wiring from the power supply to the master board and the front panel switches. Use RG-174 for the counter input and the 1 MHz test output. Location of the controls and cutouts is entirely up to the builder and depends on the case used.

Before installing any boards, check the power supply for proper operation. If it's working, turn the power off and install the TBOD in the 12-contact

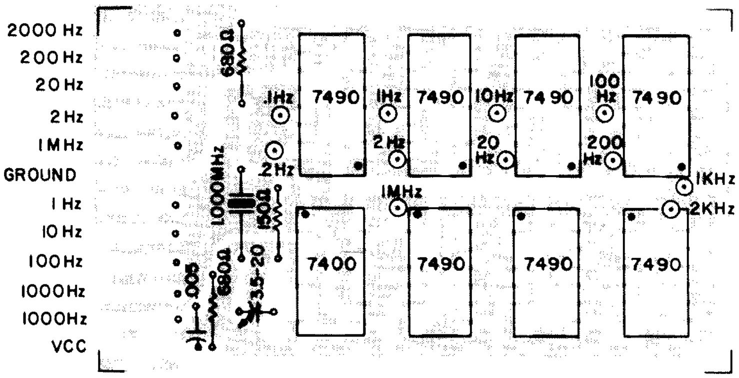

Fig. 9(b). TBOD component layout. Use jumpers to bring frequency outputs to edge. 1 board per counter. Dot indicates pin 1.

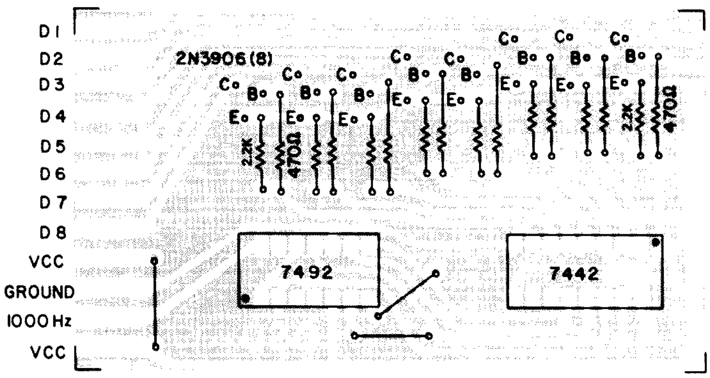

Fig. 10(b). DSU component layout. 1 board per counter. Dot indicates pin 1.

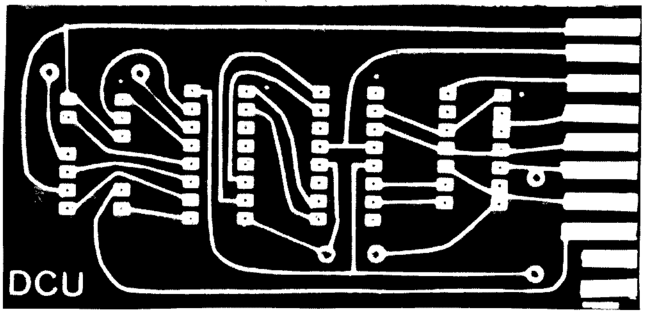

Fig. 11(a). DCU board (full size).

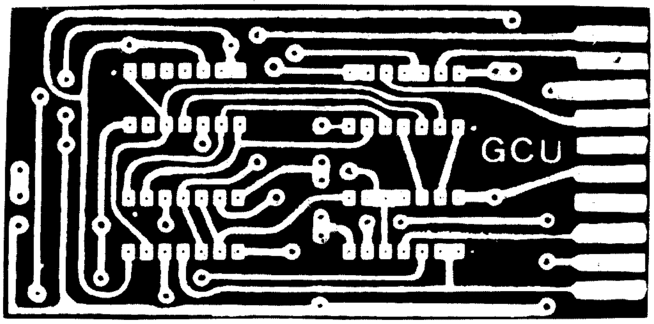

Fig. 12(a). GCU board (full size).

socket on the left (from the front of the counter). An accurate frequency counter will be needed to set the 1 MHz oscillator, at least 1 x 10^{-8}. Turn the power on and with the counter connected to the 1 MHz test output, adjust the trimmer to read 1 MHz, plus or minus a few Hertz. If it won't adjust, try another 7400. This is an initial adjustment. After the rest of the boards are installed, and at least a one hour warmup period, recheck the frequency. Before turning off the power, check the divider chain for proper frequency outputs. If everything checks out, turn the power off and install the GCU board. Select the one second gate and turn the power on. If the GCU is working, the gate LED will blink on for one second and off for 10 msec. Check the Reset 0 and Strobe outputs with a scope for a 10 msec pulse. If the GCU checks out, turn the power off and install the DSU board.

Turn the power on and check each of the DSU outputs with a scope for proper switching. A frequency of 125 Hz should be measured. If the DSU is working, turn off the power and install the DCUs. Turn on the power and check that the display reads all 0s. If not, make sure all the boards are in the sockets tight or check for unsoldered connections, or bad ICs. If all 0s are displayed, turn off the power.

Install the Preamp board and turn the power on. The display should still read all 0s. If not, the DSU may need bypass capacitors on the Vcc line on the master board. Any signal on the Vcc line greater than about 20 mV will trigger the Preamp and cause false counting with no input. Any input signal will have to exceed this by at least 10 mV to be counted. This has been one of my headaches with my counter, although I know I have a bad 7442 in the DSU which is causing the problem.

If you get all 0s on the display, proceed to check out the whole counter by using a signal generator to check the frequency response and sensitivity. You may want to keep a graph or record of the results for future reference. My counter showed a sensitivity of 50 mV from 10 Hz to about 35 kHz, and from 10 MHz on up, about 10 to 15 mV. I didn't have any way to check the frequencies in the middle.

All that's left to do is recheck the TBOD frequency and button up.

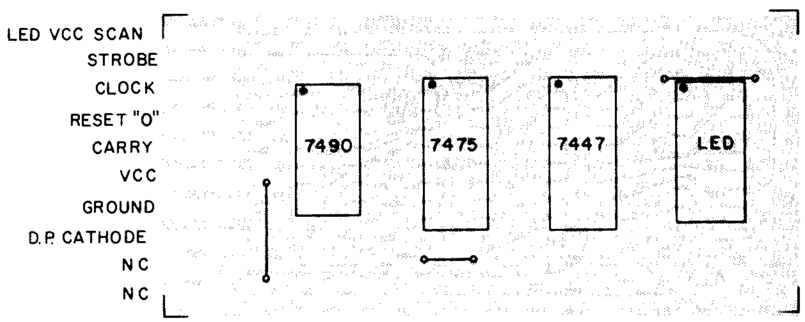

Fig. 11(b). DCU component layout. Use side mount socket for LED (see text). One DCU uses 74LS90 for 50 MHz count speed. 6 or 8 boards per counter. Dot indicates pin 1.

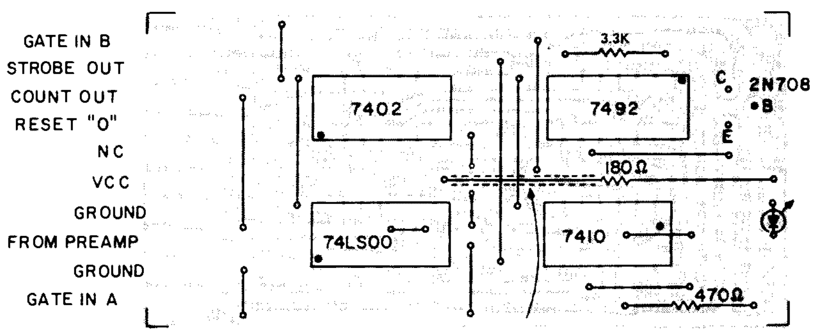

Fig. 12(b). GCU component layout. Use sleeving to insulate resistor lead. 1 board per counter. Dot indicates pin 1.

Troubleshooting

If you run into difficulty getting the oscillator to zero on exactly 1.000 MHz, try another 7400. Some will oscillate better than others. It has something to do with the characteristics of different batches. You can use a scope or another counter to check the divider chain for proper division. On the GCU, a dual-trace scope is nice because you can check and compare the waveforms at more than one point and reference them to another. Most problems here are caused by loose ICs in the socket – for me, anyway. Actually, most problems can be cured simply by trying a different IC. If you still run into difficulty, look for solder bridges, bad connections, wiring errors, or even the possibility of a leaky or bad transistor. Well, what more can I say? Have fun

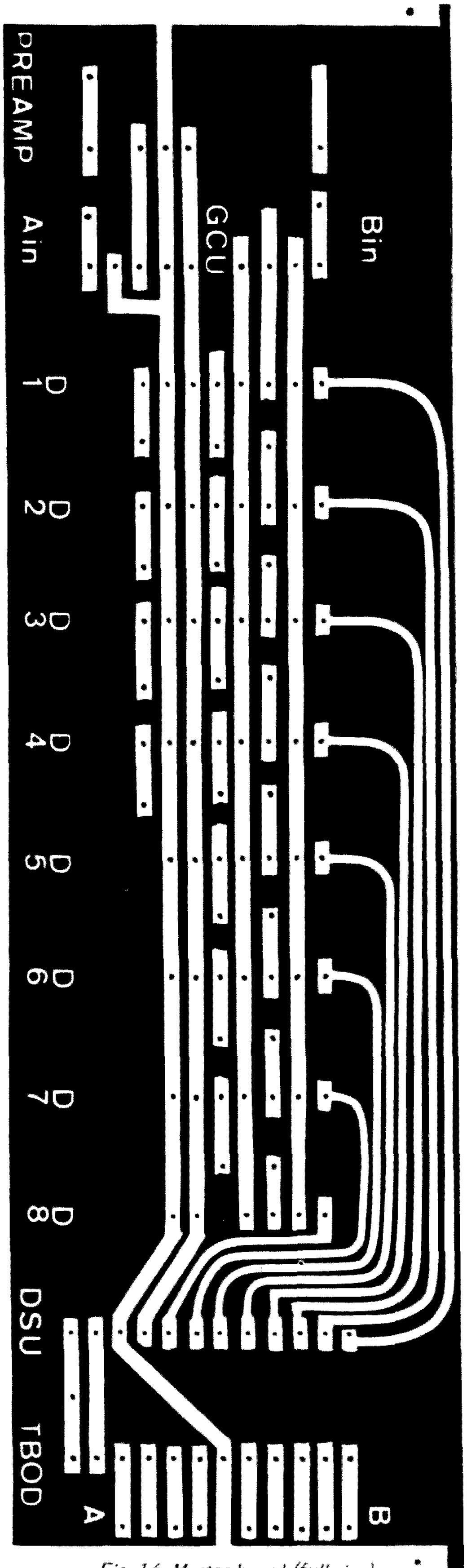

Fig. 14. Master board (full size).

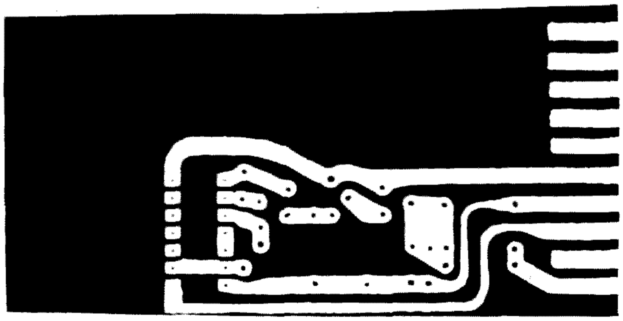

Fig. 13(a). Preamp board (full size).

counting!

Afterthought

One can save in construction costs by not using sockets for the ICs, although it's a good idea to make certain the IC is good first. It's not fun unsoldering them. Do use sockets for the LEDs, though. The preformed side mount ones are best, but a wire-wrap socket will do just as well if you carefully bend the leads with needlenose pliers.

Try for a trade-off between price and visibility on the display. Sure, those large .6" LEDs are easy to read, but expensive. The cheaper, .27" ones will work just as well, and they can be had in different colors: red, green, yellow, or even orange. Check the ads in the back of *73* and I'm sure you'll find something.

The Amphenol PC card sockets are available from Cramer International, Newton, Mass., or the local office in your area.

The cabinet will have to be at least 3½" high, 10½" long, and 7" deep. Make sure you leave at least ½" between the LEDs and the back of the

Parts List for Frequency Counter

TBOD

1	7400
7	7490
1	PC Edge Connector Amphenol #143-012-03
8	14 Pin DIP Sockets
2	680 Ohm ¼ Watt
1	150 Ohm ¼ Watt
1	3.5 – 20 pF Variable E. F. Johnson #274-0020-005
1	.005 uF Disc
1	1.000000 MHz Crystal
1	PC Board

DCU

1	74LS90 (50 MHz Version)
7	7490
8	7475
8	7446 or 7447
8	PC Edge Connectors Amphenol #143-010-03
8	Seven-Segment LEDs (See Text)
8	14 Pin DIP Sockets
8	14 Pin Wire Wrap Sockets
16	16 Pin DIP Sockets
8	PC Boards

Power Supply

1	12.6 V ac, 3 Amp Transformer
1	50 V, 5 Amp Bridge Rect.
1	2N3055
1	LM309K
1	100 uF, 25 V
1	1000 uF, 10 V
1	.01 uF Disc
1	.1 uF Disc
1	.22 uF Disc
1	1N4001

DSU

1	7492
1	7442
1	PC Edge Connector Amphenol #143-012-03
1	14 Pin DIP Socket
1	16 Pin DIP Socket
8	470 Ohm ¼ Watt
8	2.2k ¼ Watt
8	2N3906 PNP Transistors
1	PC Board

GCU

1	74LS00
1	7402
1	7410
1	7492
1	PC Edge Connector Amphenol #143-010-03
4	14 Pin DIP Sockets
1	470 Ohm ¼ Watt
1	3.3k ¼ Watt
1	2N708 NPN Transistor
1	LED
1	@180 Ohm ¼ Watt
1	PC Board

Miscellaneous

Gate select switch, BNC connectors, plastic window, fuse holders, hardware, knobs, cabinet, etc.

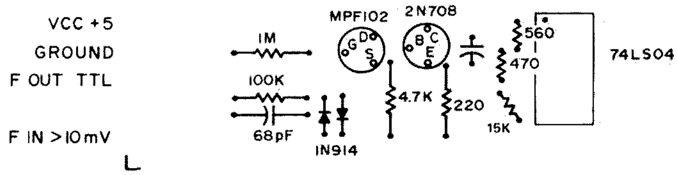

Fig. 13(b). Preamp component layout. Resistors are ¼ Watt. R5, R6, R7 are mounted vertically. 1 board per counter. Dot indicates pin 1.

front panel for removal of the plug-in cards.

If you don't need more than one gate, eliminate the switch and hardware the circuit. The switch I used is a four-pole, five-position, non-shorting miniature rotary, Centralab #PS-11. The extra position and pole made it possible to turn the power on when selecting the timebase.

Also, since I used a new GCU, I found that I could eliminate the last 7490 in the TBOD. Or leave it in if you want an accurate .1 Hz signal for something.

I had a lot of fun designing the counter, but it was not without its headaches. I'm just happy it works. ■

The 5 Minute COR

-- simplest yet?

Steve Uhrig WA3SWS
3893 Jumper Hill Lane
Ellicott City MD 21043

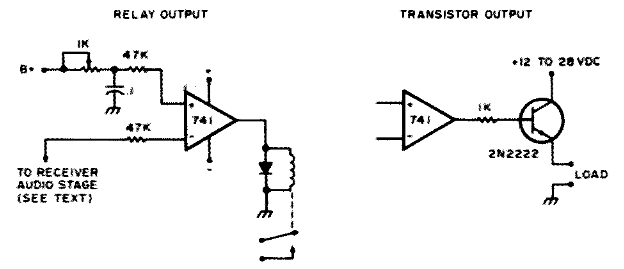

Fig. 1. Universal COR schematic.

Anybody building a repeater or a remote base needs a carrier operated relay (COR). A COR is a usually simple device that hooks into an FM receiver and closes a relay when a carrier comes in on the receiver. The relay can be used to activate a transmitter for repeater applications or activate any of a number of other devices for special purposes such as tape recorders, meters or alarms. Presented here is what I believe to be the simplest circuit for a COR around. Unlike most other circuits, this one will work on any receiver, vacuum tube or solid state.

This circuit was designed for mobile applications. I wanted something simple, solid state, rugged and reliable. The final draft meets all of these specifications. I have two of these circuits in my car controlling an onboard repeater that will relay 450 MHz to 146 MHz and vice versa. With the repeater installed in my car I am able to use a 450 MHz hand transceiver and work back to the car, firing up my 2 meter mobile with 150 Watts on any VHF channel. This makes the equivalent of a 150 Watt HT with a 5 dB antenna. It works real well, but people I talk to can't understand why they hear 5 squelches drop out.

Now for an explanation of the circuit. The whole idea centers around any old op amp you have lying around (within bounds of reason, of course . . . it works better if the op amp is not burned out). I have had the best luck with either the 741 or the 709 op amp, but several others should work also.

As shown in Fig. 1, the circuit is simple and straightforward. Let's review the basics of how op amps work. Keeping this explanation in mind, the workings of the circuit in Fig. 1 should be obvious to the most casual observer. An op amp is an analog device. In a nutshell, the gain of an op amp (operational amplifier) is very high. Gains of 100,000 to 500,000 are not uncommon. Of course, the output can never go higher than the supply rail, so you can see that an input to an op amp of 1 millivolt will give an output of 10 volts even if you run the gain at only 10,000. Notice the inputs in Fig. 1 marked + and -. These are called the noninverting and inverting inputs respectively. The op amp amplifies the *difference* between these two inputs. In this application for the COR we are using the op amp as a comparator. I will stop here for a moment and give a quick review of the workings of a squelch circuit in an FM receiver. See Fig. 2 for a block diagram of a squelch circuit.

The output of the discriminator will have noise on it when there is no incoming signal present. When a signal does present itself, the noise will quiet. A squelch circuit is designed to turn off the audio stage in the receiver when no signal is present so the operator does not have to listen to the noise. With no signal coming in, we said there would be noise at the output of the discriminator. This noise (ac) is rectified and the dc is amplified by the noise amplifier. The dc signal developed is used to conduct another transistor which in turn shunts any audio present at the audio stage to ground. When a carrier comes in, the noise will quiet. With no noise present at the rectifier in the squelch, no voltage is developed and the audio amplifier operates normally. Now here's where our carrier operated relay does its thing. Hang a voltmeter across the emitter-collector junction of the audio amplifier transistor. With the stage off, there will be a difference in current flow and therefore voltage across this junction.

Notice the inverting input of the op amp in Fig. 1. This input is hooked directly to

the collector of the audio amplifier preamp transistor. You can see now that there will be a higher voltage on this input when the transistor is turned off than when it is amplifying. The non-inverting input of the op amp is tied to a reference voltage, in this case B+. The reference voltage will remain constant, but the voltage on the other input will shift when a carrier comes in on the receiver and turns on the audio stage. The op amp will amplify the difference and drive the output to the full supply rail voltage with as little as 1 millivolt between the inputs. The output voltage can be used to trip either a low current relay or it can turn on a transistor. I used a reed relay, but any type with a coil current of less than 75 mA is acceptable. Check the specs on your particular op amp before using anything that might draw this much current. Under no circumstances draw more than 100 mA from the op amp.

The 1k pot on the non-inverting input of the op amp sets the reference voltage. The setting here will depend on where and how you hook the op amp to the receiver audio stage. Set it so the COR trips reliably on an incoming signal. Try to keep this voltage as low as you can and still keep the circuit operating properly. The 47k Ohm resistor limits maximum current on the input. There are probably about six places where you can tie the inverting input of the op amp to the receiver. Anywhere you have a voltage change between signal and no signal will work. If it doesn't work the first time, swap the leads to the + and - inputs. It may be that you have picked a point where the voltage swings in the wrong direction. Don't leave out the diode across the relay coil. When the relay opens up, there is a big voltage spike that could damage the op amp if the diode wasn't there to shunt it.

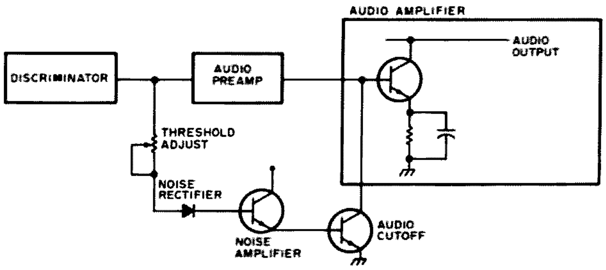

Fig. 2. Block diagram of squelch circuit for FM receiver.

Another interesting use for this COR besides repeater applications is to use it to inhibit a clock on a scanner. Use the transistor output and when a carrier comes in on the receiver you can kill the clock and lock the scanner on that frequency. When the carrier drops, the clock will start up again and resume scanning. It is possible to put a capacitor in the circuit to delay the transistor shutting off immediately if you should want the scanner to wait a few seconds so you don't miss any possible reply on the channel that was just active.

Well . . . here you have it. Construction is simple. I build my versions on the little printed circuit boards available from Radio Shack. They're a convenient way to do it and are small enough to fit in anything larger than a TR-22. If you desire to use the COR on a vacuum tube receiver, build a voltage divider on both inputs to keep the operating voltages around 15 or 20 V dc. Voltage from the push to talk line should be of acceptable quality to power the op amp if you filter it a little bit.

There are lots of uses for CORs. They're a lot of fun to play with. ■

Gerald J. Hargett
Pinefields Farm
Route 2, Box 68-E
McComb MS 39648

See the World and Get Paid!

-- merchant marine radio officers: part II

For illustration we will follow a radio officer through a routine departure. His ship, *SS Valiant*, is a tanker making a transit from the port of Houston, Texas to the port of New York, New York. This trip normally requires a little over five days. Our radio officer, "Sparks," is a conservative, thorough individual. Often this radio officer's meticulous logkeeping goes beyond the absolute minimum regulation compliance. By being overzealous, "Sparks" hopes to avoid "sloppiness" on essentials. As is the custom, our radio officer is on board the vessel one hour before posted sailing time. Since the *SS Valiant* is a tanker alongside the terminal, transmitter testing is not permitted. However, the other items in the pre-departure routine can be checked and logged. This pre-departure testing is neatly typed in the log and signed with the testing time. The log resembles the following:

> *4-25-75*
> *1400GMT — Pre-departure tests, Houston terminal. Main and emergency receivers work properly; B battery voltage 88 V dc under load; ship's line 118 V ac; emergency battery specific gravity 1278, batteries on continuous trickle charge of proper polarity; auto-alarm checks OK — keys after 4 spaced dashes; alarm keyer functioning normal; speaking tube communications to the bridge operable; radio room emergency lights burning normally; antennas visually checked and apparently in good order. Transmitters will be tested away from dock and radiation noted (antenna current). Radio room clock checked against WWV, 3 seconds fast/corrected. All publications and required spares on board. Tester . . . (signed)*

Once the vessel is cleared of the dock, main, emergency and lifeboat transmitters will be tested. The main transmitter will generally put twelve or so rf Amperes into the main antenna; the emergency, approximately three to four rf Amps.

Since it is several hours to the sea buoy (departure point for the sea passage), the radio officer is free of watch standing duties. Sea watches in the radio room are from sea buoy to sea buoy. Some companies require watch standing on long river transits. Whatever is in the contract will be implemented. "Sparks" will copy a weather broadcast from Galveston radio, KLC, at 1730 GMT. This will contain Gulf of Mexico weather data. Radio officers endeavor to copy weather "ahead" so the captain can be made aware of wind and sea conditions. This information enables the master to plan the most direct and safest routes; it also allows for more accurate estimated time of arrival (ETA) messages.

At 1900 GMT the ship drops the pilot and takes departure. The radio officer begins watch standing. The log is signed noting that a listening watch on 500 kHz is in progress. Every fifteen minutes a log entry is made of noted exchanges which occurred during that period. Silent periods (15-18 and 45-48 minutes past each hour are designated quiet listening segments for any distress signals) are logged as having been observed and as to whether or not signals were copied. At times the circuit will be quiet with no exchanges occurring during the fifteen minute segment — this fact is so logged. Under a plexiglas on the operating position are schedules of traffic lists, weather and hydrographic bulletins, station frequencies and other pertinent data. These schedules are kept when applicable. From experience "Sparks" knows that the bulk of company traffic is handled through Port Arthur radio, station WPA. By following WPA's schedules very closely, messages are often received minutes after they are filed.

As the ship gets under way, the captain will have time to prepare the routine departure messages and reports. These are then given to the radio officer who will process them. This involves counting words, noting filing time and date, proper addresses, etc. The radio officer then transmits the messages to the appropriate station(s). Once cleared, the messages are typed on formal cablegram blanks and filed for end of month processing. The master is given the original copy. One copy is filed for the company to receive, and another copy is sent to the radio agency for abstracting (computation of charges).

Suppertime comes and goes. After a brief recreation chess match with one of the off duty mates, "Sparks" is ready for the evening watch. Weather is again copied updating the earlier report. Traffic lists are checked for close of business day messages which often are filed. The log is kept current. At 9 pm ship's time the watch ends. Our radio officer sets the auto-alarm. This fact is noted and the log is signed out.

This ebb and flow of routine matters allows the voyage to New York to pass quickly. The radio officer may be asked to check the radar or loran or DF, minor problems may develop in one of the receivers or transmitters, or orders may be received to proceed abruptly to some other destination. Each day brings its own challenges. After eighty days on the tanker, the radio officer will be relieved for forty-five days paid vacation. This time will be used to rest up from the sea routine. Perhaps "Sparks" has some budding business interests – a farm or rental properties to attend, or some recreational development. Some radio officers simply enjoy spending a large amount of time off with the family. Whatever the preoccupation, the time passes once again and "Sparks" will be notified to report back to the same or some other vessel. The radio officer will bring his or her growing electronic knowledge and experience to bear once again on any situation the next eighty days on shipboard will bring.

Photo courtesy of Gene D. Legler, Editor, *Exxon Fleet News*, Exxon Company, U.S.A., Houston TX.

Traffic Handling

Traffic, messages sent and received, take up a good portion of a radio officer's watch time. Commercial operators have always prided themselves in their ability to handle a large volume of traffic with dispatch. The commercial operator is trained to copy with one hundred percent accuracy exactly what he hears. Most operators become proficient enough with the typewriter to almost sign their names. When one considers the high costs of operating oceangoing vessels today, one appreciates the need for accuracy in messages. Costly cargo operations, tugboat standby time, or overtime for repair people can all be the direct result of inaccuracies in cables. That is one reason every commercial operator carefully checks a received message for word count before acknowledging (QSLing) it.

The ability of commercial operators to handle traffic well is due in part to standard operating techniques. Crisp, snappy Morse exchanges with no superfluous sending are the key to professional radio operating. For those not familiar with commercial procedures a contact will be briefly outlined. Ship station KAVQ wants to send traffic to coast station WPA, Port Arthur radio, using the 12 MHz band. The radio officer tunes his receiver to WPA's marker frequency (12840) and then calls on KAVQ's calling frequency (duplex operation). Station WPA is constantly scanning the calling band. Rigid FCC rules must be adhered to regarding length and spacing of calls. WPA hears KAVQ calling and communication is established. The ship station will change (QSS) to the FCC assigned working frequency after advising WPA which this is so Port Arthur can tune its receiver to KAVQ's working wave. Once QSS is accomplished and communication established, KAVQ asks WPA, "QRV?" (Are you ready to copy?) WPA sends K and KAVQ responds as follows (a

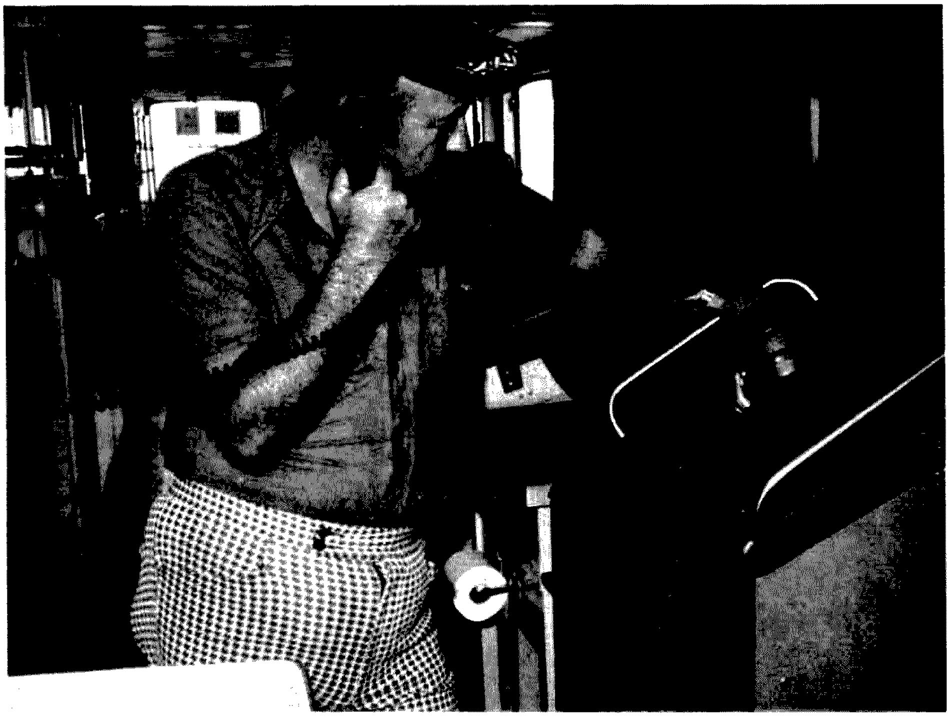

"dummy" message for illustration):

```
- · - · -    (BEGINNING SIGNAL)
MSG NR 1 SS STAR CK 8 16 1423GMT BT
KESTAR NEW YORK BT
ETA 18TH 0500 REQUIRE 2000 BUNKERS BT
AR
```

Examining this message we find the following:

Preamble: Consisting of message class (MSG), number (1), word check (8), date (16), and time (1423 GMT) of filing. A $\overline{\text{BT}}$ is sent signifying to the receiving operator to throw the carriage of the typewriter as a break is needed.

Address: This is usually a cable address such as "Keystar" followed by the name of the city in which addressee is located (New York). Again a $\overline{\text{BT}}$ signifies a break.

Text: The actual message itself. Followed by $\overline{\text{BT}}$.

Signature: Not always contained in cables.

In counting words, each word in the address, text, and signature is counted. As an operating aid the signal $\overline{\text{AR}}$ is sent at the end either of the text after $\overline{\text{BT}}$ or after the signature to indicate the end of this particular message. If another message is to follow, the operator will simply send the class designation after the $\overline{\text{AR}}$. For example, after $\overline{\text{AR}}$ the radio officer will send NRT to indicate another message of the NRT type will be sent. The coast station will acknowledge with a "QSL" and indicate a "K" or "QRV" to let the sending operator know the next message can be sent.

When the coastal station has a message the same format is followed. In place of the ship's name in the preamble will appear the city of message origination. Rather than a cable address, the message will be addressed to the vessel; usually the master's title will precede the vessel's name. Thus:

```
MSG NR 1 NEW YORK CK 7 18 2200GMT BT
MASTER, SS STAR BT
BUNKERS ACKNOWLEDGED CALL OFFICE SOONEST BT
AR
```

Traffic handling facility is acquired through practice. Time spent listening to top professional commercial operators at the busier marine stations (WCC, WSL, JCS, etc.) is a good investment. With experience the beginning radio officer will appreciate the skill involved in apparently simple, efficient exchanges of Morse. The master operator sends not one unnecessary dot or dash.

Mechanics of counting words (doubles, triples, etc.), assigning prefixes, and routing messages is acquired through usage and imitation of accepted commercial practices. ITT Mackay Marine has a comprehensive "Radio Officer Manual" which details message processing as well as a wealth of other information. All ITT Mackay contract ships have a copy of this text. RCA has a similar publication on its contract vessels. With practice and attentive listening, a new radio officer will soon become proficient in traffic handling.

Standard Shipboard Publications for the Radio Officer

All licensed shipboard installations are required to have on file the following publications in order to meet with full FCC compliance. Required documents are included in the list.

1. Valid station license.
2. Valid operator license.
3. Required station logs.
4. Alphabetical list of call-signs of stations used by the maritime mobile service – current edition.
5. List of ship stations – current edition.
6. List of coast stations – current edition.
7. List of radiodetermination and special service stations.
8. Manual for use by the maritime mobile service – ITU Geneva.
9. Part 83 of FCC Rules and Regulations.

With the above reference publications, the ship may go any place in the world and the radio officer will be able to locate appropriate coastal stations, their schedules, tariffs, routings, time ticks, and other needed data. A few explanatory paragraphs will be given regarding the publications and documents.

1 and 2. A valid station license is extremely important. The radio officer should inform the master if the license is nearing expiration. Heavy penalties are incurred for invalid licenses. It is assumed the radio officer's licenses are current and posted.

3. Station logs as well as other required stationery are usually supplied by the contracting agency. Message blanks, requisition forms, and work orders are all supplied by the husbanding radio contract company. Other normal stationery items (pens, pencils, notepads, etc.) are supplied by the particular steamship company. The radio officer is responsible for keeping the inventory at reasonable levels: usually six months of supplies are considered adequate.

4. A quick reference manual for identifying ships or coastal stations from their assigned call letters. New editions are constantly being published to keep the radio officer abreast of changes.

5. This is a more elaborate manual (over 500 pages) listing ships alphabetically by name. Pertinent data is given for each ship: type of equipment (telephone, telegraph, etc.), hours of service, ship classification and other useful information concerning the communications ability of the vessel. The present edition contains information on over 52,000 stations.

6. Perhaps the most

important and useful publication. It gives the radio officer a tool which can direct him or her to unfamiliar ports of call. The list contains pertinent information on coastal maritime stations around the world. It is republished every two years; supplements are issued every six months. This manual contains three parts: a. Alphabetical index of coast stations; b. Full particulars of each station — frequencies, operating times, traffic listings, particular communication procedures; c. An annex which gives inland telegraph rates, tariffs, and other monetary information. Once a radio knows the vessel's itinerary, this publication can be consulted and schedules planned.

7. The manual of radiodetermination and special services can be considered the next in relative importance. Part A of it gives an alphabetical index of all stations listed. Part B gives the particulars of these stations. The most useful of these are the areas of radiodetermination (direction bearing stations), time signal information for accurately setting of chronometers, and stations dispensing medical advice. The publication is complete and comprehensive. The present edition contains 750 pages.

8 and 9. These publications contain regulatory matter. The first has chapters on internationally agreed regulations and procedures; the second contains the Federal Communications Commission's regulations for the Maritime Mobile Service. These are excellent operating aids.

Besides the above publications, each radio room will have on file the various operating and technical manuals covering the electronic equipment installed. These represent invaluable service tools and maintenance aids. They give prints, upkeep information, parts nomenclature, troubleshooting procedures, and correct operating techniques. Almost any repair situation can be solved through judiciously studying the manual. If an exact remedy cannot be found, the general area of fault can usually be determined — information helpful in ordering shore repairs.

Basic Electronic Maintenance

Newly documented radio officers channel their efforts at first to learning the "radio operating" aspect of the profession. However, it will soon become evident that more is expected of a ship's radio officer. As indicated in other sections, the actual operation of the radio station becomes routine with experience. A radio officer's other responsibility is the proper maintenance of the station as well as other electronic equipment within his or her ken. In addition to the receivers, transmitters, power supplies and chargers located in the radio room, a competent sparks also will keep in proper operating order the radars, loran, direction finder, recreation shortwave receivers, and televisions on board the vessel. A person who can handle this varied array of equipment, keep shoreside repair bills to a minimum, and obtain maximum performance from the communication and navigation gear is much sought after by companies and captains alike. This section will delve into some very basic concepts of shipboard electronic maintenance. The subject is an exhaustive topic and spans the life and career of each radio officer.

All electronic equipment contains normally a combination of electronic circuitry and mechanical movements (dials, drives, relays, multicontact switches, etc.). While this apparatus is designed to operate in a vigorous salt air environment, the pounding of the ship, exposure to heavy humidity, and operation by many individuals all take their toll on equipment performance. One simple, basic preventative maintenance program is to keep the equipment clean of salt and corrosion. Wiping surfaces, cleaning and lubricating contacts, burnishing pitted relays, lightly greasing cams, gears, chain drives, reseating tubes and crystals to remove any corrosion from forming on pins — all these elementary procedures will contribute to optimum operation of electronic gear.

Electronic apparatus employing high powered electron tubes can be disabled through a simple filament break in one of the high temperature tubes. This is a basic defect to investigate when this type of equipment fails. Power transistors are subject to the same type of thermal punishment and often open or short under such pressures.

Electronic troubleshooting requires organized logical thinking. No matter how complex the unit to be serviced, it contains the workings of the three basic electronic circuits: rectifiers, amplifiers and oscillators. If a person has a sound grasp of the operation of these circuits, the defective element (resistor, coil, capacitor) can often be pinpointed through simple voltage and resistance measurements. The prints contained in the manuals offer clues as to what proper readings should be found. Any wide deviation from suggested call-outs in an electronic print should alert the radio officer to seek reasons for the deviation; often the "reasons" will be the faulty component located.

As with radio operating, one becomes proficient in basic maintenance and troubleshooting of gear with experience. Certain faults will occur over and over. Eventually symptoms will be immediately recognized and the fault will be rapidly repaired. Many radio officers work at one time or another at repair depots ashore. These are either electronic maintenance companies, television repair facilities or two-way radio repair terminals. This shoreside experience is valuable. Techniques are developed which speed servicing. Much can be learned from senior technicians with many years of experience. These people are usually more than willing to share their experiences with beginners.

It is well to note at this point that radio officers receive base wages for the eight hours (normally) watch standing. All repair/maintenance work is additional compensation earned outside watch hours. Shipping companies have found even with the overtime paid they still are ahead economically. Large service companies of necessity charge high rates. They may have to travel long distances, wait hours for delayed arrivals, and in general contend with costly overhead expenses.

With advances in modern day technology, satellite communication capabilities, and automated telex (unattended) terminals installed aboard ships, it is very possible that international and national regulations will be amended some day possibly eliminating the traditional role of radio officer as presently known. However, it is the consensus of all those knowledgeable in shipboard manning policies that a place will always be available on a vessel's articles for some type of "electronic officer," a person (male or female) who can cope with sophisticated equipment and effect repairs necessary to keeping communications "alive" between the vessel and shore. No one will venture how far into the future this situation will materialize. However, the technology is available today. Regulatory agencies, however, require lengthy periods to legislate major changes. The person who keeps aware of advances in communication electronics, broadens his or her electronic expertise

through study and application, and brings a common sense practical trouble-shooting approach to repair situations has taken positive steps to enhance his or her worth to the company and keep the job secure.

Goals

It is hoped that the reader has found helpful information in these pages. I have attempted to bring together material aimed at positive means of joining the ranks of radio officers. As in many narrow specialties, it is difficult to "break in" the profession of radio officer. The rewards as hinted are ample for those who pursue the necessary courses of action to qualify. The opportunities are open to both men and women. Foreign flag vessels have employed female radio officers for years. Many of these women, in addition to sending beautiful commercial CW Morse, are competent electronic technicians.

As in any profession one encounters the excellent, the mediocre, and the incompetent. Anyone seriously endeavoring to embark on a seagoing career as a radio officer is wholeheartedly encouraged to strive for excellence in performance. Conscious awareness of sending good CW, meticulous log-keeping, faithful performance of required tests, error-less copies of messages, weather reports, hydrographic bulletins — all these mark the truly professional radio officer. After becoming settled in commercial radio operating, further study to acquire the radar endorsement on one's license will enable the holder to perform more complex maintenance on these units. Passing the higher code test after a full year's service is acquired will grant the radio officer the first class radiotelegraph license, the apex in certification. Proficiency in repair and maintenance of electronic equipment will bring additional financial remuneration as well as a gratifying sense of technical achievement.

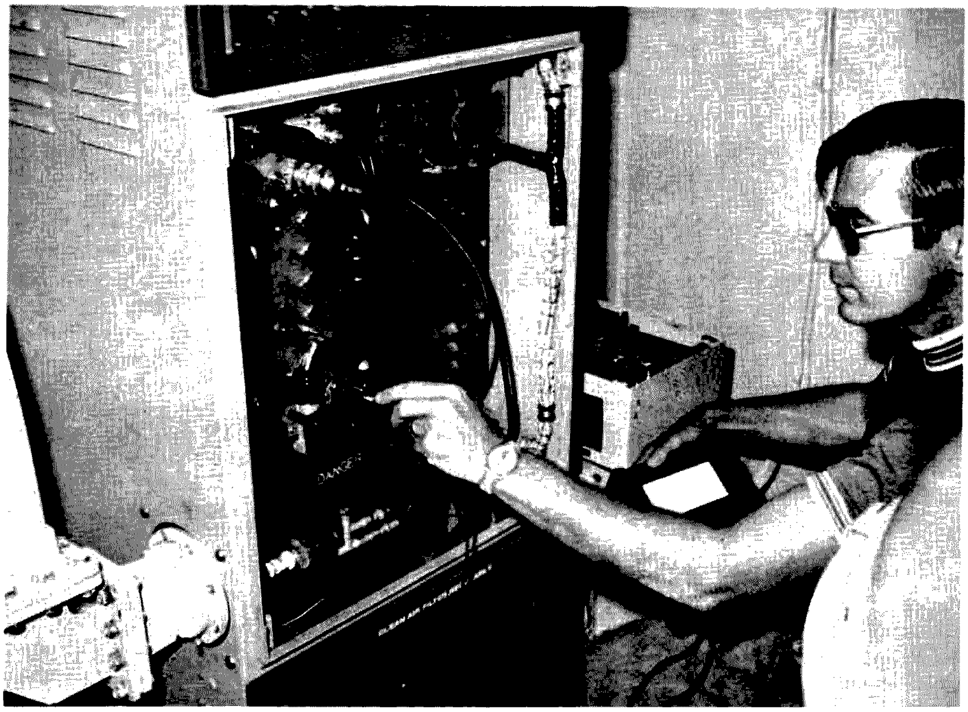

A sincere "73" and best of luck. May your efforts toward becoming a Merchant Marine radio officer be crowned with success. ■

APPENDIX A

Maritime Station Information
Traffic Lists
Weather Schedules
Selected Operating Frequencies
All Time GMT

TRAFFIC LISTS. Odd Hours
WSC (Tuckerton NJ) 19 past
WPD (Tampa FL) 20
KLC (Galveston TX) 30
WHM (Baltimore MD) 30
WAX (Ojus FL) 35
WSL (Amag NY) 50
KPH (San Fran CA) on hour
KFS (San Fran CA) 30

TRAFFIC LISTS: Even Hours
WLO (Mobile AL) hour
WOE (Lantana FL) 05
WPA (Port Arthur TX) 18
WNU (Slidell LA) 35
WCC (Chatham MA) 50
KHK (Hawaii) 30
KOK (Los Angeles) 50

WEATHER SCHEDULES
Gulf of Mexico
KLC 0530Z/1130Z/1730Z/2330Z
WLO 1300Z/2300Z
East Coast Weather
WSL 0500Z/1100Z/1700Z/2300Z
West Coast Weather
KPH 0500
KFS 0420
KHK 0530

Time Standards (for chronometer settings)
WWV/WWVH 5 MHz/10 MHz/15 MHz/2.5 MHz
CHU (Ottawa, Canada) 3330 kHz 7332 kHz 14670 kHz

Selected Marine Station Frequencies in kilohertz

WPA	416	6435	8555	12840
WCC	436	6376	8568	13033
KLC	484	6369	8666	13038
WLO	438	6446	8722	12704
KPH	426	6467	12808	
KFS	436	6365	12844	
KHK	484	6407	13029	
WNU	478	6495	12826	

Mediterranean/European Major Stations
Traffic Schedules:
Odd Hour
GKU (London) on hour
SAG (Sweden) on hour
PCH (Holland) 5 past
OST (Belgium) 10 past
DAN (Germany) 30 past
Even Hour
SVA (Athens) on hour
LGW (Norway) on hour
OST (Belgium) 10 past
FFL (Paris) 30 past
CUL (Lisbon) 30 past

Frequencies for above stations found in frequency list.

Pacific and Far East Stations
Traffic Lists:
NBA (Balboa, Panama Canal Zone) odd hour
JOS (Chosi, Japan) 30 past odd hour
HLP (Pusan Korea) 30 past odd hour
JSC (Japan) even hour
KUP (Okinawa) even hour
DZG (Manila, PI) 20 past even

Hydrographical information is sent by station NAM, Norfolk VA. Broadcasts throughout the day. The 1700 GMT schedule contains information for Mariners. Frequencies: (in kHz)
88 5870 8090 12135 16180 20225 25590

Stations use their medium wave through twelve megahertz bands adding higher frequencies when propagation is open.

APPENDIX B

Employment Sources

There are two national maritime radio officer unions. Each of these unions has branch offices in all major port cities of the United States as well as keeping headquarters located in New York City.

The first of these two unions is the *American Radio Association*, an AFL-CIO affliate. This union has numerous companies under contract: Lykes Brothers Steamship Company, Keystone Tanker Company, and American Export Lines, to mention only a few. Additional information can be acquired from either the headquarters in New York or any of the many branch offices located around the country. A person shipping via a union hall usually registers at the office nearest his or her home as transportation reimbursement will be calculated to and from this point.

Of interest to radio officer aspirants is the Free Press which the American Radio Association (ARA) sponsors each Sunday at 1818 GMT. ITT Mackay station WSL, Amagansette, N.Y., transmits this weekly Press on frequencies (in kilohertz) 6414, 8514, 13078, 17021 and 22485. Items in this Press concern maritime happenings of the past week. Special interest is shown in this press when new contracts are pending; complete details are generally sent.

The second national radio officer union is named, appropriately enough, *Radio Officer's Union.* This union also has branch offices in major port cities. Companies which utilize men from the

ROU, such as Mobil Oil, Delta Line, and many others, depend upon the union to recruit enough members to fill any vacancies which occur.

Government agencies responsible for crewing of specialized vessels represent an excellent source of employment. United States Coast and Geodetic Survey vessels hire qualified civilians. These ships make fine berths for a person to enter commercial radio operating. One may even opt to remain as a civil service employee as a career. Generally the pay scale on such vessels is lower than on other commercial ships. Thus a large turnover in manpower is ordinarily experienced. Military Sealife Agency (MSA), with offices in New York and San Francisco, concentrates its efforts using civilian crews to operate vessels which carry exclusively military cargo items. The Corps of Army Engineers occasionally requires radio officer personnel on its large offshore dredges and supply boats.

Private research and oceanographic companies generally hire radio officers for upcoming projects. Herein lies potential employment leading to the six months' endorsement, as many of the research vessels are voluntarily equipped. Texas A & M University operates one such vessel. The Woods Hole, Mass. project has its project ship. Inquiry can be made of oil consulting firms which operate survey type boats requiring the services of radio officers.

Besides the national unions for radio officer registration, many smaller steamship and tanker companies hire individuals without union affiliation. Most of these "independent" companies do have "independent" or company-organized unions with membership optional. Such companies are Hess Oil, Sabine Tankers, Exxon U.S.A. Tankers, Sun Oil, and many others. Inquiries of one of these companies will generally glean "leads" to other companies who hire independent of union affiliation. Time spent researching the yellow pages of the phone directory of any large port city will lead to positive and plentiful potential employment sources.

APPENDIX C
Types of Equipment

Any licensed United States Maritime Mobile Radio Station is required to have certain minimum equipment to satisfy compliance with FCC regulations. Compulsorily equipped vessels generally will have the following electronic items in the radio room:

Reserve Receiver: This can be operated from battery supply voltages in an emergency. Frequencies covered by this receiver must be in the 15 kHz through the 650 kHz spectrum. Most older installations use superrengenerative receiver circuitry. More recent installations use low power consuming transistorized heterodyne principles.

Main Receiver: This is generally an extremely well built double or triple conversion superheterodyne circuitry receiver which operates off the ship's mains. Modern RCA and ITT Mackay receivers cover 80 kHz through 30 MHz in numerous bands. For convenience, each band usually tunes a 500 kHz segment of the band desired at a time. The RCA 8516 model is one example of a modern shipboard general coverage receiver. All modes (AM, CW, SSB) of reception are included as well as a variable bandwidth to help copy signals on crowded bands. The ITT Mackay 3010C has become a standard of excellence for shipboard receivers. It is rugged, stable, versatile and costly. Made to rigid commercial specifications, this receiver gives years of service with minimum maintenance. Terminology varies regarding the "reserve" and "main" receiver concepts.

Main Transmitter: These installations cover 400 through 535 kHz and range in output power from 200 Watts to a thousand. The more common main transmitters put 250 to 500 Watts into the antenna. Both A1 and A2 emission modes are contained in the units. Output configurations of these transmitters enable a wide variety of antenna types to be used. Most popular is the longwire and vertical (top hat) loaded antennas.

High Frequency Transmitter: These installations are the units which usually get the "communicating" done over long distances. It is quite normal to consistently "work" home stations halfway around the world. These HF transmitters generally cover 2 MH through 24 MHz. Crystal controlled oscillators eliminate off frequency excursions. Generally a ship will have two calling frequencies and two working frequencies in each of the harmonically related marine bands of 2, 4, 6, 8, 12, 16, and 22 MHz. Thus a potentially large number of channels are available for needed communications. Emission of the HF transmitters is A1; however, some units combine AM telephone operation permitting A3 operation in allocated bands. The FCC has legislated that no amplitude modulation be permitted after 1977. Ships will then be required to use the suppressed carrier single sideband transmission mode. Many ships today are SSB equipped for its excellent communication ability.

Reserve Transmitter: Like the reserve receiver, this must be capable of operating off emergency battery voltage. These units cover 350-515 kHz using A2 emission with output power in the 50 Watt range. Versatile antenna networks allow matching of even random wire lengths should critical situations require this.

Auto-Alarm: The purpose of this device is to stand a watch on the distress frequency when the radio officer is unable to either because he is off cuty or because of other extenuating circumstances. The international alarm signal consists of a series of dashes four seconds in length, separated by spaces having a duration of one second. Auto-alarms designed to meet FCC specifications are arranged to actuate an audible alert (bell) when four correct dashes and spaces have been received. Modern alarms utilize transistor circuitry achieving high reliability. Older alarms, through a system of stepping relays, require more maintenance to keep the mechanical system operative. The auto-alarm receiver covers 492 to 508 kHz. Nominal standard signal is of 50 microvolts.

Auto-Alarm Keyer: This unit is operated in conjunction with the main transmitter and will send out, mechanically, the appropriate alarm actuating signals. Standard procedure is to send the keyer signal for a minute followed by the SOS message.

Battery Charger(s): The radio officer is responsible for keeping the emergency batteries in a good state of charge (specific gravity of 1278 or so). Battery charging devices are part of most consoled equipment which can be manually or automatically operated.

That is the very basic radio equipment found on compulsorily fitted vessels. More elaborate installations will include VHF/SSB/AM radiotelephones, facsimile receivers and machines, radioteletype equipment, and perhaps satellite communications facilities.

Bridges of vessels are fitted with sundry electronic devices. Loran, omega receivers, Decca navigator gear, ten and three centimeter radars, collision avoidance computer systems, autopiloting systems, and remote radiotelephone installations

are some of the more complex items found on modern day vessels.

APPENDIX D
Antennas

A moot question often develops among radio engineers: What is more important, a higher powered transmitting system or a redesigning of the antenna system? This answer will not completely satisfy both parties but is sufficient for discussion purposes here: The better the radiating facilities connected to a transmitter, the more economical and efficient use is made of the power required to produce increased output. Thus, shipboard antennas are very important devices which require special consideration.

Earlier shipboard radio history details that simple longwire antennas worked efficiently for the medium frequencies being generated. Even today the best radiator for the 400-500 kHz band is a good longwire stretched as far as possible between two points aboard the vessel. Ships with such longwires work coastal stations at far greater distances then sister ships equipped with verticals. However, once high frequency transmission became commonplace, the vertical antenna proved to be an excellent device for shipboard installation. Rugged and efficient, a vertical cut for the 8 MHz band and properly loaded for others can effect around the world communications when linked to a transmitter in the 200-500 Watt output class. In special class vessels where longwires cannot be located, the verticals are coil loaded to resonate on the lower frequencies. This is inefficient and the range of communication diminishes. Most ships will have a combination of longwire(s) and vertical antennas to take advantage of the inherent characteristics of each.

F. Raymond Dewey
7 Caroline Dr.
Bennington VT 05201

Watch DX with a Spectrum Analyzer

-- seeing is believing

If you've ever seen or used a spectrum analyzer, you know how valuable they are. After calling CQ you can see the signals replying without touching the receiver. When chasing DX you can see the weak signal before hearing it and therefore tune more carefully. An analyzer is useful for finding clear spots in a crowded band or weak signals in a quiet band.

Connecting the analyzer to your receiver is no problem. The analyzer input signal is obtained from the plate of the first mixer stage of the receiver. The frequency response at this point is quite broad and enables the analyzer to view as much as 100 kHz of the band.

Unfortunately, some amateur and general coverage receivers change mixer output frequencies for different bands (as shown in Fig. 1 for the Hammarlund HQ-180).

With this type of receiver, either 2 spectrum analyzers must be used, or one analyzer to cover only a portion of the receiver tuning range, or one analyzer with an external converter. With cash output already exceeding income, the XYL was not exactly happy about buying another analyzer. Having used the analyzer on the high bands, I was lost without it on the low bands. I therefore decided to build an external converter to convert the low band i-f up to the high band i-f required by the analyzer (as shown in Fig. 2).

The oscillator is not critical, but should be crystal controlled for stability. However, I was reluctant to spend any money at all, and the receiver just happens to have a crystal oscillator which isn't doing anything when the receiver is tuned to the low bands. With the addition of a ½ Watt resistor, I now have my oscillator, and if the mixer is passive, no external power supply is required. Granted, I now have a "birdie" at 2.58 MHz, but so what. It's not in an amateur band or a broadcast band and there isn't anything else.

The completed circuit is shown in Fig. 3. It's simple, it works, and best of all, it's cheap. Resale value is not noticeably affected so long as the extra 22 kΩ resistor is removed prior to sale.

Construction was not critical, except keeping the input away from the output. The diodes can be almost any decent switching type, but should be germanium (hot carrier diodes might be an improvement). The input transformer is normally used as an FM descriminator and is therefore quite broad-banded. The output transformer primaries should be balanced. ■

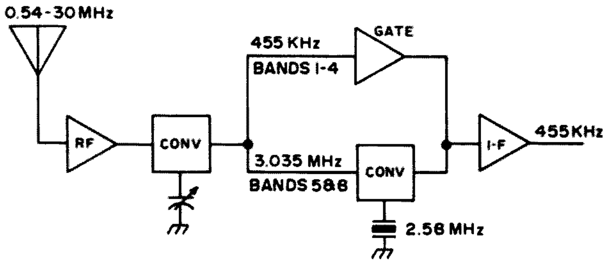

Fig. 1.

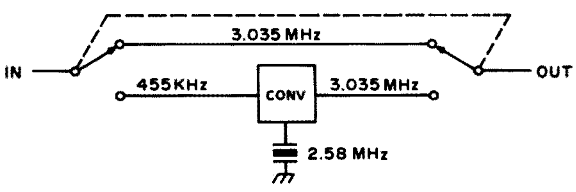

Fig. 2.

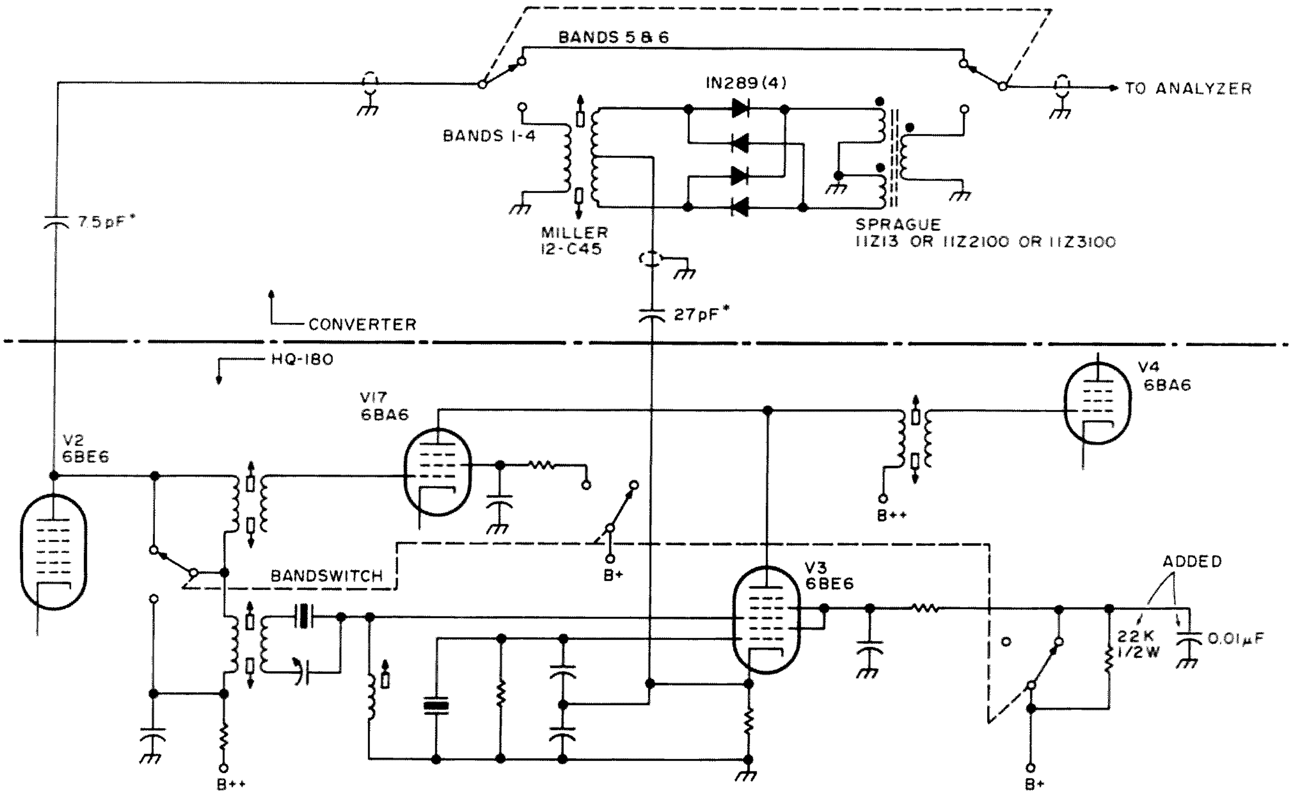

*Fig. 3. *Install in receiver as close as possible to pickup point.*

D. J. Brown W9CGI
RR 5, Box 39
Noblesville IN 46060

DXing with a Weather Map

-- a new 6m DX technique

Since I read all the propagation reports, I decided it was about time to chime in my two cents worth (15 years worth to be more precise). This is an article on the propagation of radio waves – 6 meter radio waves to be exact. As anyone can tell by my past VHF articles, I am addicted to that portion of our bands.

There is one BIG factor in 6 meter propagation many seem to overlook except for some of its groundwave effects – WEATHER!

Nearly all large newspapers cover the only information you really need. I'm referring to the little map that shows all the little high and low pressure cells floating around and the fronts are shown, too. If you can copy the weather satellites, all the better, but at least make sure what time your newspaper map was drawn up for, as there is a lag from weather bureau to news desk, to press, to you. You will need to adjust for that difference, as weather is everchanging.

The trick for single hop DX (I know, E layer and all that jazz be darned) for us has been to find a low pressure (storm type – mucho electrons excited) cell about halfway between us and where we want to go. If you can draw a straight line (allowing for the Earth's curvature) from you to the desired destination, and hit the "edge" (not middle) of one of these cells, you are home like a bandit. More than 50% of my DX work has occurred on a *dead* band! There is much pleasure in this, too, until everybody else wakes up, since your contacts can be many minutes long and quite rewarding – not 5-9-9 contest style.

In order to explain the edge of the storm cell theory, and since no one (including me) seems to ever remember it by the direction of wind circulation around the cell, let's take a storm cell (low) to your West. Aim to go "under" it as it appears on the map. Example: I am in Indiana, target is California, and cell is right on a line from Indianapolis to San Francisco and about halfway between. Aim on the Los Angeles side, not the upper or Sacramento side. Reverse this and go "over" storms to your East, left of storms to your North, and right of storms to your South. All this is with reference to a map laid before you with the North direction to the top, which is the normal.

I neither know precisely why this works, nor why the other side of the low cell doesn't work – nor does either side of a high pressure cell regardless of its size or intensity! I assume it has more to do with the electrical charge and intensity than the barometric pressure itself.

I sincerely would appreciate hearing any and all reports of success or failure using this method; as for me it has proven almost 90% effective. Give it a chance to work before you panic and scream. Also, anyone who believes he can explain why it works is welcome to do so. I do things because they work and then figure out why. Just a simple explanation will do. Random chance for such an occurrence is extremely small compared to our success.

Thank you all for the SASEs on past articles – it does assure you of a speedier reply – usually one day turn around unless you totally stump me, which has happened. There were over 240 letters on the article on strobing displays, on updating counters in general and specifically the K2OAW model I started with. Forgive me please the "form" letter replies, but they let me answer all but one of them the same day.

Good DX, and when the low pressure cell gets very close to you with its inherent lightning – give it up for awhile or your next record mileage may be a QSL card from the heavens above! ■

Social Events

DALLAS TX
NOV 5-7

The First Southwest Vintage Radio & Phonograph Convention will be sponsored by the Southwest Vintage Radio & Phonograph Society on the 5th, 6th and 7th of November at the Ramada Inn-Dallas East in Dallas, Texas. Planned activities include forums on collecting of antique and vintage radios, restoration of antique radios, classic radios (McMurdo-Silver/Scott), antique phonographs, and general Q&A. The usual banquet, swap sessions, and an auction will also be held. Of special interest will be a contest of various equipment submitted by convention registrants. Three prizes will be awarded in each division. In addition a "Best-of-Show" award will also be made. For more information and a pre-registration packet, please contact Convention SVRPS, PO Box 19406, Dallas TX 75219.

McAFEE NJ
NOV 13-14

The 1976 Hudson Division Convention will be held November 13-14, 1976 at the Great Gorge Resort Hotel in McAfee, New Jersey. There will be ARRL and FCC forums, large indoor exhibit area with 40 booths, giant outdoor flea market, super raffle, free gifts, special features, indoor swimming, game room, and much more. Registration: advance $3, at door $4. For hotel registration: Al Piddington WA2FAK, 4 Acorn Drive, East Northport NY 11731.

LIVINGSTON NJ
DEC 3

The Livingston Amateur Radio Club will hold its second annual electronic flea market on Friday, December 3, at 7:30 pm at the Livingston Memorial Recreation Building. For further info, contact Jeff Gehl WN2AXL, (201)-267-0280.

BROOKLYN NY
DEC 19

The Kings County Repeater Association will hold an indoor flea market on Sunday, December 19, 1976, from 9 am to 4 pm. Located at 910 Union Street, Brooklyn NY (at Grand Army Plaza). Sellers $3.00, buyers $1, children free. Refreshments available. Talk-in on 146.43 and 146.52.

DAVENPORT IA
FEB 27

The annual Davenport Radio Amateur Club Hamfest will be held Sunday, February 27, 1977 at the Masonic Temple in Davenport, Iowa. Admission is $1.50 advance – $2.00 at the door. Talk-in on 28/88 and 52. Refreshments and tables are available. For info and tickets send SASE to Dick Lane WAØGXC, 116 Park Avenue, So. Eldridge IA 52748.

FORT WALTON BEACH FL
MAR 20

The Fort Walton Beach Swapfest will be held Sunday, March 20, 1977. For further information contact Playground Amateur Radio Club, PO Box 873, Fort Walton Beach FL 32548.

I/O EDITORIAL

from page 71

would go almost mad to be around that much in goodies. 8080s? Oh yes, here is a carton of several thousand. Memory chips? They're over there in

that stack of cartons. One of Godbout's most popular items is a 4K memory board, and we got a promise from Reo Pratt for an article on it for *Kilobyte*.

Bill and Reo drove us over to see George Morrow . . . an incredible genius. He was hard at work on a whole bunch of projects . . . the Godbout PACE computer system (working just fine and ready for production) . . . a front panel for the Altair and Imsai with a fantastic operating system built into it . . . and a bunch of other projects. George promised articles on the PACE, on his front panel, on stopping a computer, on his secret prototyping system. Now if we can only get him to stop building long enough to write!

Bill, Reo, George, Sherry and I got in Bill's plane and flew out to Santa Rosa for dinner. I spent most of the time rag chewing on 2m with my HT. Bill had bought the plane up here in New Hampshire last spring and taken it back to Oakland. They originally tried to get me to buy the plane (it was a very good deal), but I am too careless a pilot and if I started flying again I'd kill myself for sure. I sold my last plane when I needed money to put out the first issue of *73* . . . in 1960. I had a lot of adventures while I had my plane.

Down in L.A. we visited Dennis Brown of Wave Mate. This is the wire wrapped computer . . . and it is a bit more expensive than most of the others so business wasn't quite as hectic as for some. I suspect that once Dennis gets his ideas across there will be a lot more enthusiasm for both wire wrapping and for the Wave Mate. There will be some articles by him on both wire wrapping and on the design concepts at the Wave Mate. There may be a Wave Mate in your future . . . watch out.

John French of The Computer Mart in Orange has been doing fantastically with high Lear-Siegler terminals and was putting the finishing touches on a 16-bit computer system which will be introduced shortly. Naturally, we got a promise of an article on it for *Kilobyte*. Just what the computer hobbyist reaction to the coming 16-bit systems will be is quite a question. They probably don't need the speed and computing ability of such a machine, but I'll bet they will go for it anyway.

My next stop was in Salt Lake to see how Sphere was doing. They've been having quite a bit of trouble . . . in part due to a credibility gap on promised software . . . partly due to parts problems . . . documentation delays . . . etc. The new president, with whom I had an appointment, was not available. Doug Hancy gave us a tour of the building and promised that a system for our lab would be shipped immediately.

Next month: on to Albuquerque and the Mighty MITS Machine!

NEW AND BETTER CHIPS

There is a lot of excitement over the Zilog Z-80 microprocessor chip. It is an advanced version of the Intel 8080 . . . much more flexible. I view this with very mixed emotions . . . on the one side I'm enthused about being able to put aside my nice $650 CPU with the 8080 and put in a new Z-80 CPU which will probably run another $650 or so. I'll overlook the fact that I've barely been able to get the old computer system working long enough to do much with it . . . certainly not long enough to develop a large number of programs.

I suspect that the Z-80 means that much of the small computer industry is going back to square one as far as programming is concerned. While it is nice that the Z-80 will work with the 8080 programs (not completely, I understand . . . but for the most part), I also understand that no serious programmer would ever put up with using 8080 programs on the Z-80 . . . it isn't efficient. No, they'll go back and write new compilers for BASIC . . . and that might take as long as last time.

The Altair 8800 first came out in January, 1975. Their BASIC compiler was debugged and out about a year later . . . and we are still waiting for much in the way of application programs for the system. The fact is that it takes a long time to write programs. The 6800 came out along in late 1975 and, as far as I know, there

is not yet a BASIC compiler available for it that is full sized. There are a couple for Tiny BASIC or Micro-BASIC . . . and others are to be ready soon. There is less than that for the other systems which have come later.

So here we go back again! And when the Z-80 comes along next January, will we do another memory dump and start still again? Or will it be the Intel 8888 that gets everyone all excited next year . . . or the year after? There is much to be said for sticking with the good old 8080 and working out programs so that we can use it.

Space is available for conflicting viewpoints, as they say on TV.

NO WAY TO TURN

The old "tube" hams are getting very nervous. The rash of articles in *73* bringing us all up to speed on modern technology . . . the large scale integrated circuit and its main result, the microprocessor, has sent some into shock . . . others to the midnight oil to try and catch up. The "I just don't want to know about it" crowd (3999 kHz, e.g.) thought they had an out . . . until their last inner sanctum of protection against the onrush of progress dumped on them with a series of articles on . . . microprocessors!

Other than canceling subscriptions to everything but *CQ*, there *is* no way out. The initial reaction was of utter panic . . . computers are *not* any part of amateur radio and they will *have* to go away . . . right?

Speaking of *CQ* . . . has anyone seen it on the newsstands anywhere? It used to be sold by newsstands, but I haven't seen it in a couple of years anywhere. I think *73* is the *only* ham magazine being sold on newsstands these days.

If you happen to run into old-timers suffering from future shock and who want to get into at least a speaking acquaintance with microcomputers, the new *73* book "Hobby Computers Are Here!" is the only book out which will help make the transition relatively painless. $4.95 from the *73* Radio Bookshop. Engineers may get some value out of the *HR* series of reprints from a scientific journal on microprocessors. So far, about 90%+ of the original material on the subject has been published in *73* . . . shades of the old FM days seven years ago.

WILL KILOBYTE ROB I/O?

It appears as if *Kilobyte* is going to be a lot more software- and systems-oriented than the I/O section of *73*, so I expect that I/O will be carrying on. We've covered a lot of the computer fundamentals in *73* already, but we still have more to go. And we surely are going to have a lot of ham applications of computers in *73*. Hopefully, once the basics of the field are published in *73*, we won't have to go back over them.

Authors with ham applications for computers should run, not walk, to their typewriters.

ATLANTA 1977

The Atlanta Hamfest is being expanded this coming year to include a Computerfest. The Hamfest will be centered on Saturday, June 18th and the Computerfest on Sunday, June 19th. This will be the big hamfest and computerfest for the southeast for 1977, so plan your vacations accordingly.

Atlanta is a great city for something like this since there is so much entertainment for the family . . . they don't have to stand around whining while you take a close look at the latest equipment. Stone Mountain will keep them occupied for at least a day . . . they'll enjoy the excitement of a ride on the railroad around the mountain. Then there is Underground Atlanta . . . complete with a computer which will print out your portrait on a Teletype machine! Atlanta has a lot to offer.

In addition to about 80 exhibits by ham dealers and manufacturers, there are expected to be about 50 or so by computer firms . . . and perhaps the biggest flea market yet for both ham gear and computer equipment. You'd better make your reservations early so you'll be right in the middle of the action.

EDITORIAL BY WAYNE GREEN

from page 4

for protecting our low bands (we've already lost almost all of our VHF and UHF bands) is to get one or more teams of top-notch ham ambassadors out there to sell amateur radio to the smaller countries.

The obvious way to do this is to get the ARRL directors off their duffs, and have them reach into the League pocket and get people like Bill Eitel or Lloyd and Iris Colvin out there visiting these important countries. The League has over $1,000,000 just sitting around in cash and securities, which should be out there working for the hobby. Perhaps it is time for the members to insist that the Miser of Newington stop hoarding money for some rainy day and check the storm clouds which are brewing.

Several years ago the board of directors set aside a $100,000 slush fund for "protecting our frequencies." Money gets spent out of this fund every year, but so far no accounting of these expenditures has ever been made to the members. The hundred thou would probably do the job we need done – if it were used honestly.

So what can *you*, the ARRL member, do? You can pin down any ARRL director who shows his face at your club or at a hamfest and insist on getting an accounting of *your* money. Insist that he tell you exactly how that hundred thou has been used in the past, or vote him out of office. Don't blame the officials too much . . . the money was there and they thought there would be no accounting to the members for it, so they did just what you might expect.

If your director levels with you about the corruption, and promises not only to end it but to see that something is done immediately in the way of serious WARC (ITU) preparation, then perhaps you can forgive him for being part of the coverup and elect him again.

Lloyd and Iris Colvin would be ideal ham ambassadors . . . they know the values of amateur radio to small countries . . . they've been just about everywhere in the world, and they are about as nice people as you will ever meet. Lloyd was being considered seriously for president of the League a few years back, and I think that one of the most serious mistakes the directors have made in recent times was in giving in to Huntoon and electing his crony Daniels.

We have but two years left to beat the bushes for votes among the small countries . . . are you going to let this conference go the way ARRL did the last one, when we lost 64,492 MHz out of our UHF allocated 64,495 MHz? That's right . . . we went into the last conference at the ITU and lost 99.995% of our UHF satellite frequencies. If you don't put the pressure on your director and do it right now, you could be doing great harm to one of the most valuable human resources our country – or any other country – has . . . radio amateurs. Elect directors who will break the cobwebs on the Newington purse and get us all out of this fix. Let's put some of that million bucks to work while there is still time.

IT MAY BE A FIGHT

Since Baldwin (he's running things now) permitted the board of directors of the ARRL Foundation to resign in protest rather than permit that organization to try and help with the WARC effort, it seems more than likely that he will do everything he can to prevent the directors from pursuing the same goals. I'll bet you haven't heard about *that* fiasco from your director either . . . most of them are

sitting on top of that bomb and don't know what to do about it.

Being an ARRL director may have prestige, but it offers little fun. Most of them are afraid to talk with other directors, for they never know which one will report it to Baldwin and make them suddenly "the enemy." Directors are supposed to show up at one or two meetings a year, vote unanimously yes or no, and not ask too many questions. Other than that, they have to go to club meetings and hamfests in their area and pass along the "word" from HQ. Members keep this system going by re-electing directors for years.

Perhaps it is unreasonable of me to measure the interest of a director by whether he gets *73* or not . . . but how can anyone really be in touch with things if he doesn't read *73*? I just checked, and seven of the 15 directors are *not* subscribing. If you run across Haller, Egbert, Zak, Sullivan, Thurston, Gmelin or Price, you might mention the terrible things you saw in *73* about them . . . drive them crazy.

Half of the directors are up for grabs every year, so you *can* change things if you'll take an interest. Get someone you can trust to run for the job and get him elected. There were a lot of posters at the Chicago hamfest for Don Miller W9NTP to replace Haller . . . that would be a great change. Don is the SSTV pioneer, not the DXpeditioner who almost ruined DXing. In most cases you can't go too far wrong by getting someone new.

INFLATION AND SUCH

Those few really brainwashed ARRLers who fell for the "more is less" baloney last year and believed that a bigger *QST* would cost less are having to face up to the facts of life . . . which are just as I predicted in *73*. *QST*'s costs have gone up substantially . . . and so have the costs of all the other ham magazines . . . the result of the new size. Well, the new size is here and it isn't going back again. Most of the magazines have had to change printers in order to match the new size to bigger presses.

QST has announced their new advertising rates . . . up to $912 for a page now. *73*'s rates are $1095 for one page. The latest rate we have for *HR* is $695, and *CQ* is $575. Since advertising rates are based largely on circulation, this may tell you something.

Apparently the recent rise in *73* readership has some people worried. ARRL is running a poll of their members to find out what it is about *QST* that they don't like. If you get one, please don't forget to tell 'em how much you really enjoy and look forward to the SCM reports and contest results . . . okay?

The 1976 cover price for the ham magazines has been $1 for all but *73* . . . which at $1.50 has been the best selling by far on newsstands and over radio store counters. We understand *QST* is increasing to $1.50 in January . . . no word on *HR* or *CQ*. *73* will go up to $2 in January and the yearly subscription rate will go up to $12.50, with $25 the price for three years. You say you forgot to send in the $17.76? That's the way it goes.

LIFE ON TIME PAYMENTS

A life subscription costs $150 these days. That's a little heavy for most people, so we'll go along with a five payment system . . . $30 per payment for five months. The life subscription is a good deal . . . not a few *73* subscribers bought in years ago and have been sailing free for a long time. You know that inflation is not going to stop . . . that paper and postage are going to keep going up . . . so grab this bargain while you can. Just send $30 and a note that you want to be a lifer.

RECENT HAMFESTS

Let's see . . . somehow we managed to survive an ARRL convention in Philadelphia . . . right in the middle of the American Legionnaires who were dropping like flies. Our *73* booth was constantly surrounded by them all weekend. Few hams had to worry about getting sick, since they stayed away from the convention by the tens of thousands.

The Boston convention pulled about what I expected for a downtown Boston affair . . . not very much. I was on the speaking program

. . . 5:00 am on Sunday morning, I think it was. Well, shucks, that's better than not being able to speak . . . right? I wasn't all that interesting, but if you would like to hear me you can get a tape of the debacle from *73* for $4. An hour, about.

One exhibitor made the mistake of parking his van on a Boston street and had the roof almost pulled out, along with the CB and ham rigs attached to it.

The most popular exhibits, again, were the computer-oriented ones by The Computer Store, Computer Mart, and American Used Computers. I'd sure like to see more combination hamfests/computerfests . . . perhaps with the hamfest part centered on Saturday and the computerfest on Sunday . . . I think it would be good for both groups . . . as well as the about 33% overlap between them.

One week after the New England ARRL convention came Expo 76 at Chicago. This affair is improving every year. There is talk of moving it to a hotel near O'Hare next year. Expo had me on the program . . . in prime time, by golly. I didn't have that much different to say from Boston, so there's no good reason to make tapes available of this. I talked a lot about *Kilobyte*, as a matter of fact . . . and we took a lot of *Kilobyte* subscriptions at our booth. I guess just about everyone is getting *73* by now.

While I enjoy getting out and saying hello to a thousand or so readers, I wonder whether I'm doing better that way than staying at home and answering the mail . . . and there is an awful lot piling up as a result of my traveling around. I dunno.

SUPPORTING CAST: II

As promised, here is the second installment of portraits from the *73* gallery.

Chris Dillon is seen here working on file records of orders for books, tapes, and back issues sent out. Every now and then something gets screwed up in shipment and she has to be able to go back and find what was shipped where and when.

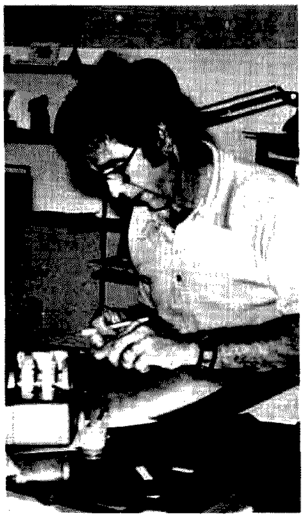

Noel Ray Self is working on negatives for 73 Magazine and for the latest 73 books. Photographs have to be made separately and glued onto the negative of the type and drawings . . . a job requiring great precision. Negatives are never perfect, so Ray has to find all pin holes and go over them with paint to opaque them. Where ads are placed on pages, negatives have to be spliced together. Duplicates are then made on single sheets of film. Ray does the splicing . . . also adding the page numbers at the bottom . . . etc.

Continued on page 208

STATEMENT OF OWNERSHIP, MANAGEMENT AND CIRCULATION (Required by 39 U.S.C. 3685). 1. Title of publication, 73 Magazine. 2. Date of filing, 15 Sept 1976. 3. Frequency of issue, Monthly. A. No. of issues published annually, 12. B. Annual subscription price, $10.00. 4. Location of known office of publication (Street, City, County, State and ZIP Code) (Not printers), Pine Street, Peterborough, Hillsboro County, N.H. 03458. 5. Location of the headquarters or general business offices of the publishers (Not printers), Pine Street, Peterborough, Hillsboro County, N.H. 03458. 6. Names and complete addresses of publisher, editor, and managing editor. Publisher (Name and Address) Wayne Green, Peterborough, N.H. 03458. Editor (Name and Address) Wayne Green, Peterborough, N.H. 03458. Managing Editor (Name and Address) Jack Burnett, Peterborough, N.H. 03458. 7. Owner (If owned by a corporation, its name and address must be stated and also immediately thereunder the names and addresses of stockholders owning or holding 1 percent or more of total amount of stock. If not owned by a corporation, the names and addresses of the individual owners must be given. If owned by a partnership or other unincorporated firm, its name and address, as well as that of each individual must be given.) Name, 73 Inc., Peterborough, N.H. 03458. Wayne Green, Peterborough, N.H. 03458. 8. Known bondholders, mortgagees, and other security holders owning or holding 1 percent or more of total amount of bonds, mortgages or other securities (If there are none, so state) Name, none. 9. For completion by nonprofit organizations authorized to mail at special rates (Section 132.122, PSM) The purpose, function, and nonprofit status of this organization and the exempt status for Federal income tax purposes (Check one) Not applicable. 10. Extent and nature of circulation. (X) Average No. copies each issue during preceding 12 months. (Y) Actual No. copies of single issue published nearest to filing date. A. Total No. copies printed (Net Press Run) (X) 96,584 (Y) 98,492. B. Paid circulation 1. Sales through dealers and carriers, street vendors and counter sales, none. 2. Mail subscriptions (X) 90,721 (Y) 92,514. C. Total paid circulation (Sum of 10B1 and 10B2) (X) 90,721 (Y) 92,514. D. Free distribution by mail, carrier or other means samples, complimentary, and other free copies (X) 1,680 (Y) 1,713. E. Total distribution (Sum of C and D) (X) 92,401 (Y) 94,227. F. Copies not distributed 1. Office use, left over, unaccounted, spoiled after printing (X) 3,806 (Y) 3,881. 2. Returns from news agents (X) 377 (Y) 384. G. Total (Sum of E, F1 and 2 — should equal net press run shown in A) (X) 96,584 (Y) 98,492. 11. I certify that the statements made by me above are correct and complete. Signature and title of editor, publisher, business manager, or owner. Biff Mahoney, Business Manager.

Tracking the Hamburglar

STOLEN: Drake TR-22 2 meter transceiver, s/n 640139, beige Trimline TT Handset, magnet mount quarter wave antennae. Crystals for 52/52, 16/76, 37/97, 87/27, 63/03, 34/94. Stolen from Rick Simpson KØUZP, 2723 Rigel Drive, Colorado Springs CO 80906, 303-471-2059.

TAKEN: Wilson T1402 S/M 2 meter handie-talkie, s/n OR6427. Crystals for 52/52, 22/82, 25/85, 16/76, 34/94, 69/09. Stolen from James Hettle, PSC #1, PO Box 2493, Peterson AFB CO 80914.

RIFLED: Heathkit HW-202 with installed Tone Burst Encoder, TTPAD, six (6) sets xtals 34/94, 94/ , 25/85, 115/715, 28/88, 16/76 (switch indicates 04/64 but xtals are

16/76). My ssn 125-32-5960 on various parts internally including underside of trans and rec boards. Also stolen: Courier Comet 23 CB, s/n 12300643. Stolen from my parked auto in Garden City NY on August 30, 1976. If found, please contact heart-broken owner, David K. Gordon WB2YUJ, 155 Nimbus Road, Holbrook, NY 11741.

ROBBED: Yaesu FR-101SD1G HF digital receiver, s/n 6C31339. Yaesu FL101 HF digital transmitter, s/n GE306276. Stolen from Associated Electronic Service, 404 Arrawana, Colorado Springs CO 80909.

RIPPED OFF: Kyokuto FM-144 2m transceiver, s/n 6215. Stolen from vehicle at Los Angeles Coliseum on July 24, 1976. Contact Abel J. Tapia WA6FSZ, PO Box 414, Montclair CA 91763.

RUSTLED: Drake MN-2000 matching network, s/n 6485. Heath SB-650 frequency counter. Stolen on August 29, 1976 from auto in Rockland County. Please contact Cliff Cooley, Jr. WN2GHL, 4 Camp Hill Road, Pomona NY 10970.

HIJACKED: Icom 230 2 meter radio, s/n 240-2915, forcibly removed from vehicle in Fort Wayne, Indiana on September 4, 1976. Report filed with Fort Wayne police. Kenneth C. DeGroff WB9OCW, 62322 Oak Road, South Bend, Indiana 46614

FCC

FCC ANNOUNCES CHANGE IN ISSUANCE OF NOVICE CLASS AMATEUR RADIO CALLSIGNS

As part of its continuing effort to provide the public with rapid and effective service, the Commission will shortly cease issuing distinctive callsigns to Novice class amateur radio stations.

Presently, Novice class stations in the continental United States are issued callsigns prefixed by the letters "WN" to facilitate their identification as Novice stations. Novice stations outside the continental United States are also assigned distinctive callsigns. This practice has proved to be unsatisfactory, however. It has caused several difficulties in the processing of amateur applications, not the least of which are the issuance of the same callsign to two different stations and the issuance of callsigns in callsign blocks, such as "WC," which are not available for general amateur use.

Accordingly, beginning October 1, 1976, each Novice callsign was assigned in accordance with the following:

Present Prefix	*New Prefix*
WNØ	WBØ*
WN1	WB1
WN2	WD2
WN3	WB3
WN4	WD4
WN5	WB5*
WN6	WD6
WN7	WB7
WN8	WD8
WN9	WB9*
WH6	KH6
WL7	KL7
WP4	KP4
WP6	KP6
WG6	KG6
WS4	KS4
WS6	KS6
WV4	KV4
WW6	KW6
WJ6	KJ6

*Callsigns in these areas are presently nearing the end of the WB series. After "WB" prefixes are depleted, "WD" callsigns will be issued.

All amateur Novices with license expiration dates of October 1, 1976 or later will be issued new Novice licenses in the near future. Such new licenses will be identical to the licenses superseded, except that they will have printed on them the callsigns the Novice licensees would have been assigned under the old callsign assignment system upon obtaining higher class operating privileges. The new callsign must be used by the Novice licensee as his callsign.

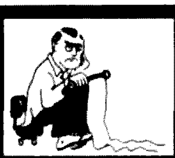

...de W2NSD/1

NEVER SAY DIE

EDITORIAL BY WAYNE GREEN

from page 178

Meet Fran Dillon, who handles invoicing for subscriptions and orders for books, tapes and such items. As more and more of this routine is taken over by the slowly expanding computer system at 73, Fran should be able to devote more time to expanding the Radio Bookshop service. Fran also helps with sales and inventory records, a necessary part of keeping things moving smoothly.

Susan Mikula helps with bundling the piles of mail that get sent out every day. Note the mail trays behind her. Mail for each zip code center has to be sorted out and bundled.

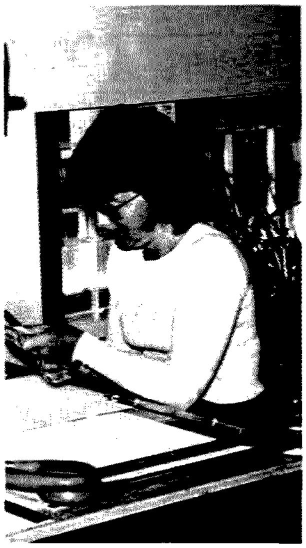

Virginia Mammone helps with the pasteup of type to make up the pages of articles in the magazine. This is very exacting work, for each block of type must be set in precisely right . . . if it is off even a hair it looks crooked to the eye on the pages. Once the pages are pasted up, they are made into negatives and printing plates are made from the negatives.

Here's Richard Force WB2QYV/1, who's editing and organizing the new books which are coming from 73 . . . and there are a lot of them in the works, such as three more test equipment handbooks . . . a new Novice Study Guide . . . a new Repeater Atlas . . . General Class Study Guide . . . RTTY Handbook . . . and many more.

propagation

by
J. H. Nelson

EASTERN UNITED STATES TO:

GMT:	00	02	04	06	08	10	12	14	16	18	20	22
ALASKA	7	7	7	3	3	3	3	3	7	14	14	14
ARGENTINA	7	7	7	7	7	7	14	14	14	14A	14A	14
AUSTRALIA	14	7B	7B	3B	7	7	3B	7	14	14	14	14
CANAL ZONE	7A	7	7	7	7	3A	7A	14	14A	14A	14	14
ENGLAND	7	7	7	3	3A	3A	7A	14	14A	14	7	7
HAWAII	14	7B	7	3	7	7	3	3B	7B	14	14A	14
INDIA	7	7	7B	7B	7B	7B	7A	14	7B	7B	7B	7
JAPAN	14	7B	7B	7	7	3	3	7	7B	7B	7B	14
MEXICO	14	7	7	7	7	7	7	14	14	14A	14	14
PHILIPPINES	14B	7B	7B	3B	3B	3	3	7	7	7B	3B	7
PUERTO RICO	7	7	3	3	3	3	7A	14	14	14	14	14
SOUTH AFRICA	7	7	7	7	7B	7B	14	14	21	21	14	14
U.S.S.R.	7	7	3	3	7	7B	7B	14	14	7B	3A	3A
WEST COAST	14	7	7	3	7	7	7	7A	14	14A	14A	14

CENTRAL UNITED STATES TO:

GMT:	00	02	04	06	08	10	12	14	16	18	20	22
ALASKA	14	7	7	3	3	3	3	3	7	14	14	14
ARGENTINA	14	7	7	7	7	7	7	14	14	14A	14A	14
AUSTRALIA	14A	7B	7B	7B	7	7	3B	7	14	14	14	14
CANAL ZONE	14	7	7	7	7	7	7	14	14A	14A	14	14
ENGLAND	3	7	7	3	7	7	7	14	14	14	7B	3B
HAWAII	14	7B	7	3	3	3A	3	3	7	14	14A	14
INDIA	7	7	7B	3B	7B	7B	3	7A	7A	7B	7B	7B
JAPAN	14	7B	7B	3B	3	3	3	3	7	7B	7B	14
MEXICO	7A	7	3	3	3	3	3	7	14	14	14	14
PHILIPPINES	14	7B	7B	3B	3B	3	3	3	7	7B	7B	7A
PUERTO RICO	7A	7	7	7	7	7	7	14	14A	14A	14	14
SOUTH AFRICA	7A	7	7	7	7	7	7B	14	14A	14A	14	14
U.S.S.R.	7	7	3	3	7	7	7B	14	7B	7B	3B	3B

WESTERN UNITED STATES TO:

GMT:	00	02	04	06	08	10	12	14	16	18	20	22
ALASKA	14	7	7	3	3	3	3	3	3A	7A	14	14
ARGENTINA	14	7	7	7	7	7	7	14	14	14	14A	14A
AUSTRALIA	14A	14	14	7B	7	7	7	3B	7A	14	14	14
CANAL ZONE	14	7	7	7	7	7	3A	14	14	14A	14A	14
ENGLAND	3B	7	7	3	7	7	3B	7B	14	14B	7B	3B
HAWAII	14A	14	7	7	7	7	7	3	7	14	14A	14A
INDIA	7B	14B	14B	3B	3B	7B	3B	3	7	7	7B	7B
JAPAN	14A	14	7B	3	3	3	3	3	7	7	7B	14
MEXICO	14	7	7	3	7	7	3	7	14	14A	14A	14
PHILIPPINES	14A	14	7B	3B	3B	3	3	3	7	7	7B	14
PUERTO RICO	14	7	7	3	7	7	7	14	14	14A	14A	14
SOUTH AFRICA	14	7	7	3	7	7B	7B	7B	14	14A	14	14
U.S.S.R.	7B	7	3	3	3	7	3B	3B	7	7B	3B	3B
EAST COAST	14	7	7	3	7	7	7	7A	14	14A	14A	14

A = Next higher frequency also may be useful
B = Difficult circuit this period
N = Normal
U = Unsettled
D = Disturbed

1976			DECEMBER			1976
SUN	MON	TUE	WED	THU	FRI	SAT
			1 N	2 N	3 N	4 N
5 N	6 N	7 U	8 N	9 N	10 N	11 U
12 U	13 D	14 U	15 D	16 N	17 N	18 U
19 N	20 N	21 U	22 N	23 N	24 N	25 U
26 U	27 D	28 U	29 D	30 U	31 U	